MISSOURI HIGHWAYS AND TRANSPORTATION COMMISSION
FINAL PLANS FOR PROPOSED
INTERSTATE 270
ST. LOUIS COUNTY



KEY MAP
LOCATION OF ST. LOUIS COUNTY

DESIGN DESIGNATION

I-270 EASTBOUND
A.A.D.T. - 2022 = 26,600
A.A.D.T. - 2046 = 29,400
D.H.V. = 10%
T = 18%
V = 60 M.P.H.
FUNCTIONAL CLASSIFICATION - INTERSTATE HIGHWAY

I-270 WESTBOUND
A.A.D.T. - 2022 = 25,700
A.A.D.T. - 2046 = 28,400
D.H.V. = 10%
T = 18%
V = 60 M.P.H.
FUNCTIONAL CLASSIFICATION - INTERSTATE HIGHWAY

LILAC AVENUE
A.A.D.T. - 2022 = 8,800
A.A.D.T. - 2046 = 9,680
D.H.V. = 10%
T = 15%
V = 30 M.P.H.
FUNCTIONAL CLASSIFICATION - MAJOR COLLECTOR

NO NEW RIGHT-OF-WAY WILL BE ACQUIRED ON THIS PROJECT.

CONVENTIONAL SYMBOLS
(USED IN PLANS)

	EXISTING	NEW
BUILDINGS AND STRUCTURES		
GUARD RAIL		
GUARD CABLE		
CONCRETE RIGHT-OF-WAY MARKER		
STEEL RIGHT-OF-WAY MARKER		
LOCATION SURVEY MARKER		
UTILITIES		
FIBER OPTICS	-FO-	FO
CABLE TV	-CATV-	CATV
OVERHEAD TELEPHONE	-OT-	OT
UNDERGROUND TELEPHONE	-UT-	UT
OVERHEAD POWER	-OE-	OE
UNDERGROUND POWER	-UE-	UE
SANITARY SEWER	-S-	S
STORM SEWER	-SS-	SS
GAS	-G-	G
WATER	-W-	W
ITS EQUIPMENT		
MANHOLE	SAN	
FIRE HYDRANT	HYD	
WATER VALVE	WV	
WATER METER	WM	
DROP INLET	DI	
DITCH BLOCK		
GROUND MOUNTED SIGN	SIGN	
LIGHT POLE		
H-FRAME POWER POLE		
TELEPHONE PEDESTAL	PED	
FENCE		
CHAIN LINK	-V-	
WOVEN WIRE	-X-	
GATE POST		
BENCHMARK	BM	

NOTE: DASHED OR OPEN SYMBOLS INDICATE EXISTING FEATURES

R6E | R7E

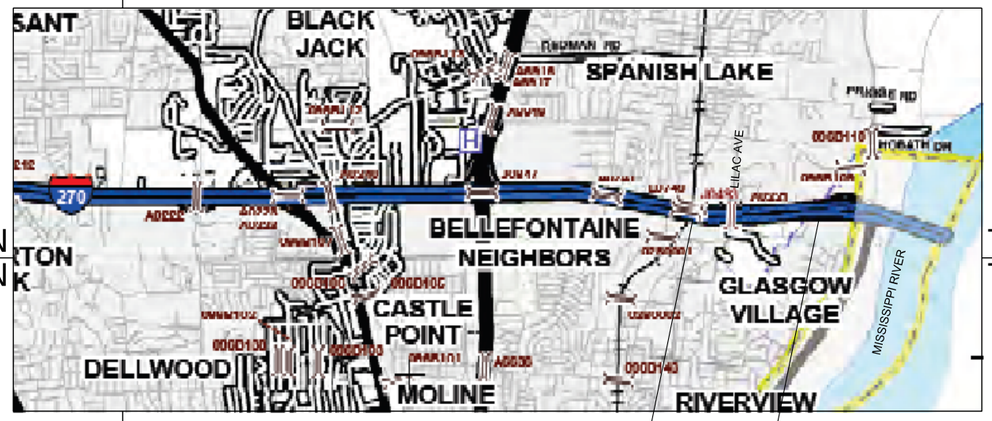

T47N T46N

T47N T46N

BEGIN PROJECT
EX I-270 LOG MILE 33.730
STA 696+50.29

END PROJECT
EX I-270 LOG MILE 34.668
STA 746+04.76

J6I3020D

GRADING, DRAINAGE, PAVEMENT, SIGNING, SIGNALS, ITS, BRIDGE, PAVEMENT MARKINGS, LIGHTING
TOTAL LENGTH = 4,954.47 FT

NOT TO SCALE

THE EXISTENCE AND APPROXIMATE LOCATION OF UTILITY FACILITIES KNOWN TO EXIST, AS SHOWN ON THE PLANS, ARE BASED ON THE BEST INFORMATION AVAILABLE TO THE COMMISSION AT THIS TIME. THIS INFORMATION IS PROVIDED BY THE COMMISSION "AS-IS" AND THE COMMISSION EXPRESSLY DISCLAIMS ANY REPRESENTATION OR WARRANTY AS TO THE COMPLETENESS, ACCURACY, OR SUITABILITY OF THE INFORMATION FOR ANY USE. RELIANCE UPON THIS INFORMATION IS DONE AT THE RISK AND PERIL OF THE USER, AND THE COMMISSION SHALL NOT BE LIABLE FOR ANY DAMAGES THAT MAY ARISE FROM ANY ERROR IN THE INFORMATION. IT IS, THEREFORE, THE RESPONSIBILITY OF THE CONTRACTOR TO VERIFY THE EXISTENCE, LOCATION AND STATUS OF ANY FACILITY. SUCH VERIFICATION INCLUDES DIRECT CONTACT WITH THE LISTED UTILITIES.

MSD# 25MSD-00035
BASE MAPS 10E & 10F

INDEX OF SHEETS

DESCRIPTION	SHEET NUMBER
TITLE SHEET	1
TYPICAL SECTIONS (TS) (8 SHEETS)	2
QUANTITIES (QU) (18 SHEETS)	3
ALIGNMENT DATA (AL)	4 - 6
PLAN (PL)	7 - 10
PLAN-PROFILE (PL)	11
SPECIAL DITCH PROFILES (PF)	12
REFERENCE POINTS (RP)	13
COORDINATE POINTS (CP)	14
SPECIAL SHEETS (SS)	15 - 23
TRAFFIC CONTROL (TC)	24 - 52
EROSION CONTROL (EC)	53 - 67
DRAINAGE PLAN (DP)	68 - 76
CULVERT SECTIONS (CS)	77 - 82
PAVEMENT MARKINGS (PM)	83
ITS PLAN (IT)	84 - 100
LIGHTING PLAN (LT)	101 - 105
SIGNING PLAN (SN)	106 - 120
SIGNAL PLAN (SG)	121 - 134
BRIDGE DRAWINGS (B)	
BRIDGE A9398 (LILAC AVE OVER I-270)	1 - 43
RET WALL A9498	1 - 10
RET WALL A9501	1 - 8
CROSS SECTIONS (XS)	
I-270 EASTBOUND	XS-2 - XS-43
I-270 WESTBOUND	XS-44 - XS-85
LILAC AVE	XS-86 - XS-95

LENGTH OF PROJECT

BEGINNING OF PROJECT	STA 696+50.29
END OF PROJECT	STA 746+04.76
APPARENT LENGTH	4,954.47 FEET
EQUATIONS AND EXCEPTIONS:	NONE
TOTAL CORRECTIONS	0.00 FEET
NET LENGTH OF PROJECT	4,954.47 FEET
STATE LENGTH	0.938 MILES
FOR INFORMATION ONLY ESTIMATED DISTURBED ACRES	8.3 ACRES

STATE OF MISSOURI
EUGENE LOUIS KUEKER JR.
NUMBER PE-2010009912
PROFESSIONAL ENGINEER

THIS SHEET HAS BEEN SIGNED, SEALED, AND DATED ELECTRONICALLY.

IF A SEAL IS PRESENT ON THIS SHEET IT HAS BEEN ELECTRONICALLY SEALED AND DATED.

DATE PREPARED: 3/25/2026
ROUTE: I-270 | STATE: MO
DISTRICT: SL | SHEET NO.: 1
COUNTY: ST. LOUIS
JOB NO.: J6I3020D
CONTRACT ID.:
PROJECT NO.:
BRIDGE NO.:

DESCRIPTION	DATE

MISSOURI HIGHWAYS AND TRANSPORTATION COMMISSION
105 WEST CAPITOL
JEFFERSON CITY, MO 65102
1-888-ASK-MODOT (1-888-275-6636)

HDR Engineering, Inc.
1001 Highlands Plaza Drive
Suite 200
St. Louis, MO 63110-1337
314-425-8300
Certificate of Authority: 000856

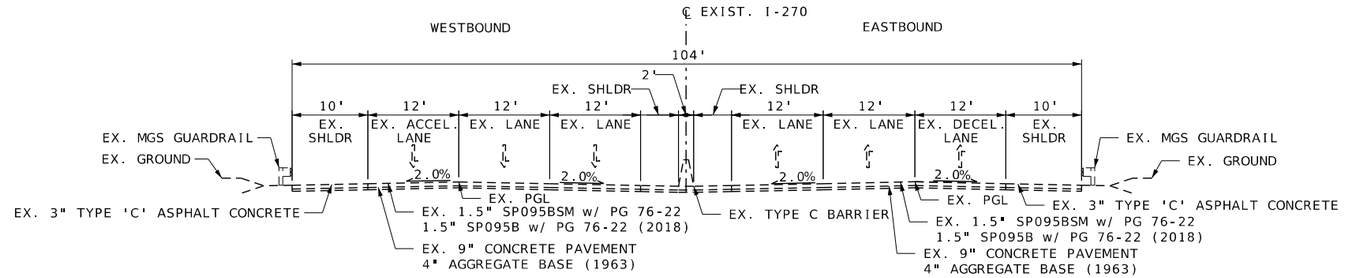

I-270 TANGENT SECTION - EXISTING
STA 696+50.29 TO STA 699+25.55

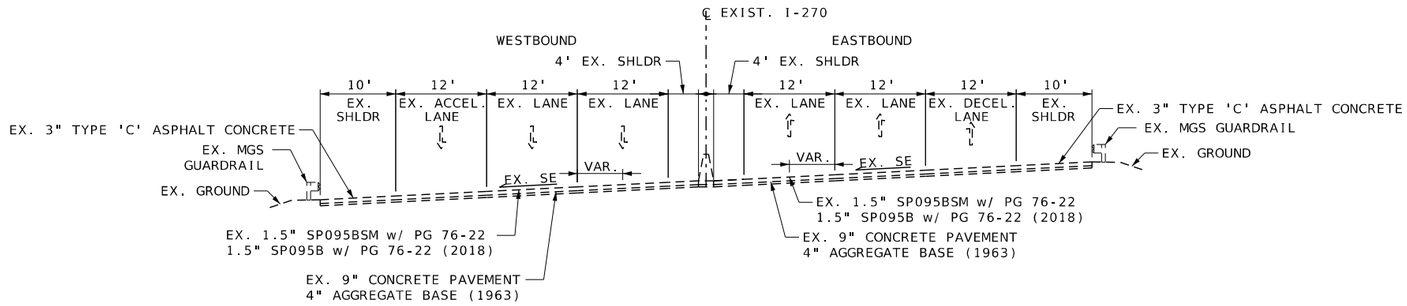

I-270 SUPERELEVATED SECTION - EXISTING
STA 699+25.55 TO STA 702+04.00

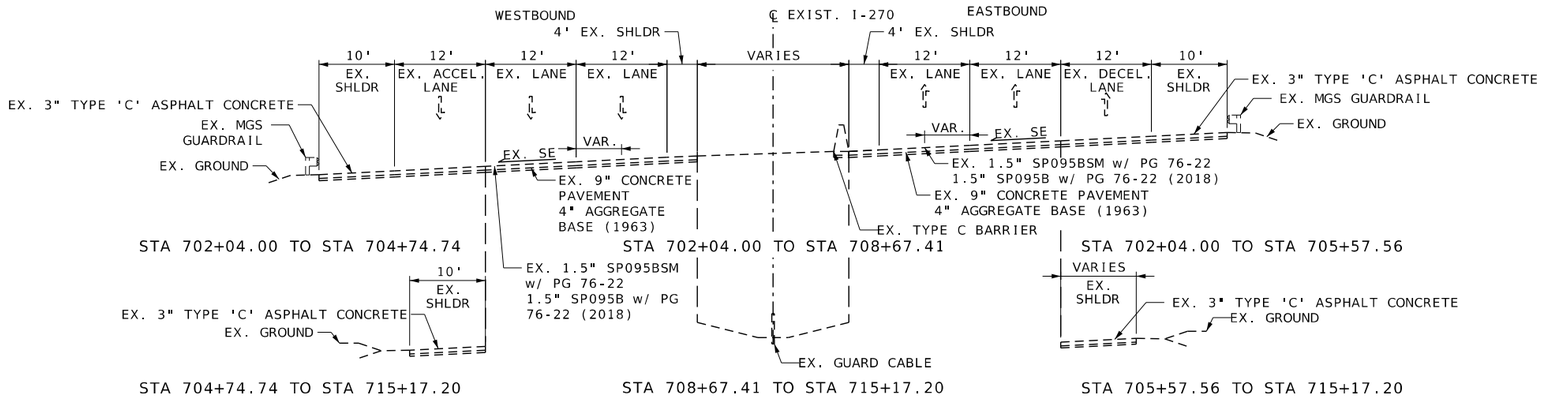

STA 702+04.00 TO STA 704+74.74 | STA 702+04.00 TO STA 708+67.41 | STA 702+04.00 TO STA 705+57.56

STA 704+74.74 TO STA 715+17.20 | STA 708+67.41 TO STA 715+17.20 | STA 705+57.56 TO STA 715+17.20

I-270 SUPERELEVATED SECTION - EXISTING
STA 702+04.00 TO STA 715+17.20

N.T.S. - FOLLOW DIMENSIONS

TYPICAL SECTIONS
SHEET 1 OF 8

STATE OF MISSOURI
EUGENE LOUIS KUEKER JR.
NUMBER PE-2010000912
PROFESSIONAL ENGINEER
THIS SHEET HAS BEEN SIGNED, SEALED, AND DATED ELECTRONICALLY.
IF A SEAL IS PRESENT ON THIS SHEET IT HAS BEEN ELECTRONICALLY SEALED AND DATED.

DATE PREPARED: 3/25/2026
ROUTE: I-270 | STATE: MO
DISTRICT: SL | SHEET NO.: 2
COUNTY: ST. LOUIS
JOB NO.: J6I3020D
CONTRACT ID.:
PROJECT NO.:
BRIDGE NO.:

DESCRIPTION	DATE

MISSOURI HIGHWAYS AND TRANSPORTATION COMMISSION
105 WEST CAPITOL
JEFFERSON CITY, MO 65102
1-888-ASK-MODOT (1-888-275-6636)

HDR Engineering, Inc.
1001 Highlands Plaza Drive
Suite 200
St. Louis, MO 63110-1337
314-425-8300
Certificate of Authority: 000856

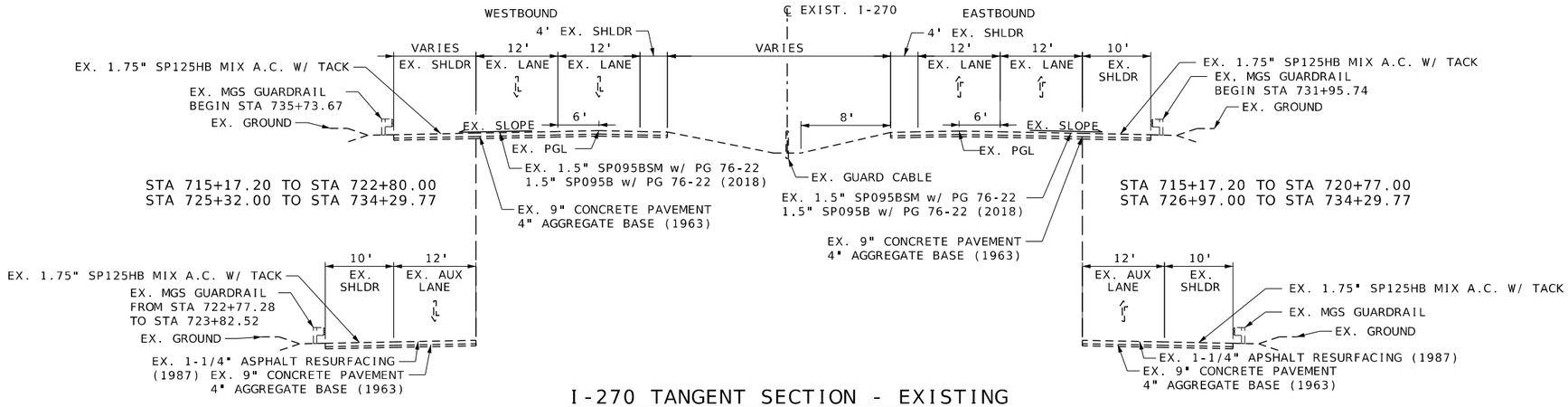

I-270 TANGENT SECTION - EXISTING
STA 715+17.20 TO STA 734+29.77

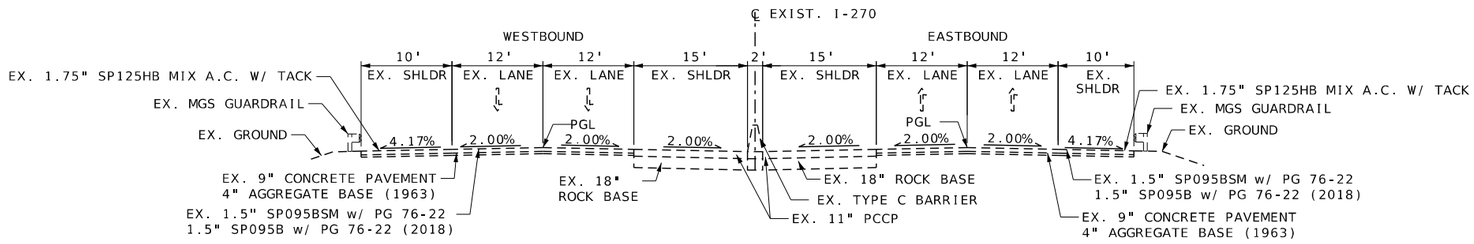

I-270 TANGENT SECTION - EXISTING
STA 734+29.77 TO STA 746+04.76

N.T.S. - FOLLOW DIMENSIONS

TYPICAL SECTIONS
SHEET 2 OF 8

STATE OF MISSOURI
EUGENE LOUIS KUEKER JR.
NUMBER PE-2010000912
PROFESSIONAL ENGINEER
THIS SHEET HAS BEEN SIGNED, SEALED, AND DATED ELECTRONICALLY.

DATE PREPARED 3/25/2026
ROUTE I-270 | STATE MO
DISTRICT SL | SHEET NO. 2
COUNTY ST. LOUIS
JOB NO. J6I3020D
CONTRACT ID.
PROJECT NO.
BRIDGE NO.

DESCRIPTION | DATE

IF A SEAL IS PRESENT ON THIS SHEET IT HAS BEEN ELECTRONICALLY SEALED AND DATED.

MISSOURI HIGHWAYS AND TRANSPORTATION COMMISSION
105 WEST CAPITOL
JEFFERSON CITY, MO 65102
1-888-ASK-MODOT (1-888-275-6636)

HDR Engineering, Inc.
1001 Highlands Plaza Drive
Suite 200
St. Louis, MO 63110-1337
314-425-8300
Certificate of Authority: 000856

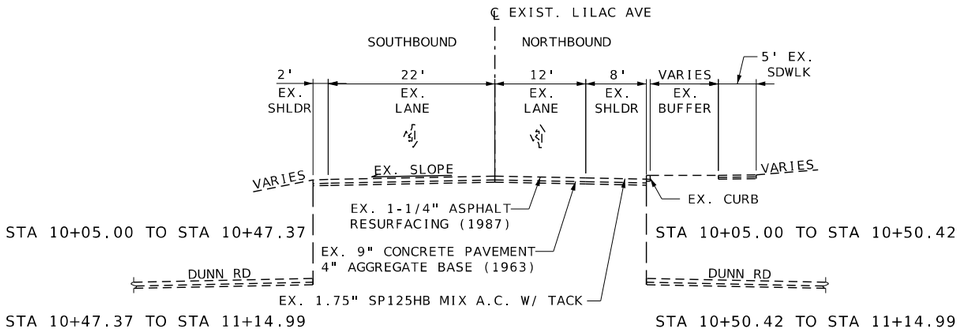

LILAC AVENUE TANGENT SECTION - EXISTING
STA 10+05.00 TO STA 11+14.99

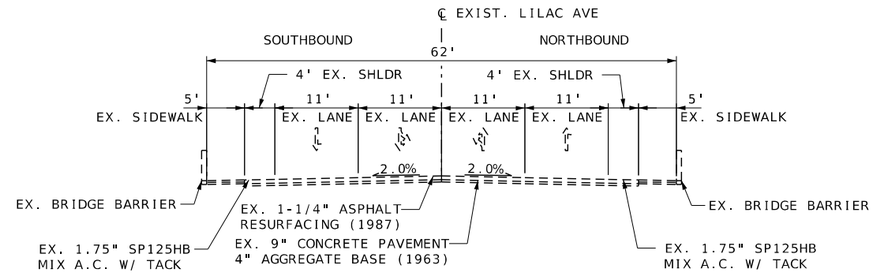

LILAC AVENUE @ BRIDGE - EXISTING
STA 14+38.96 TO STA 16+46.83

* EXCLUDES BRIDGE (SEE LILAC AVE BRIDGE TYPICAL SECTION)

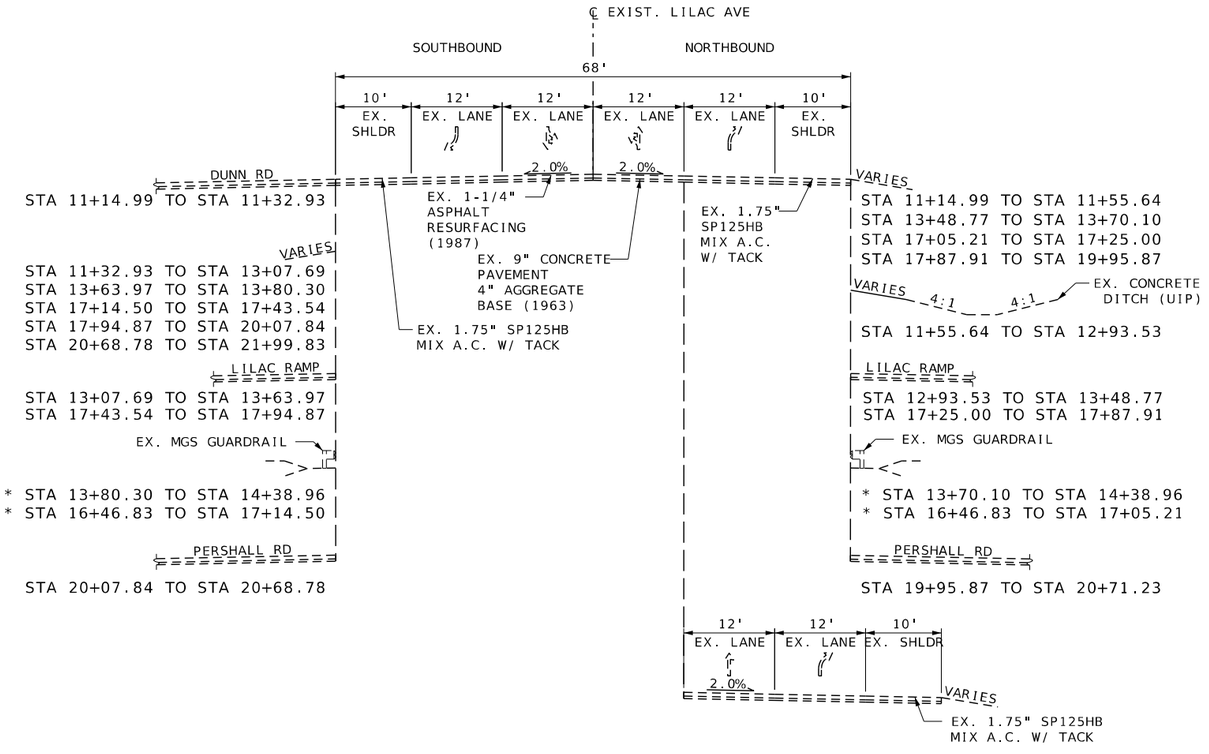

LILAC AVENUE TANGENT SECTION - EXISTING
STA 11+14.99 TO STA 14+38.96
STA 16+46.83 TO STA 21+99.83

N.T.S. - FOLLOW DIMENSIONS

TYPICAL SECTIONS
SHEET 3 OF 8

STATE OF MISSOURI
EUGENE LOUIS KUEKER JR.
NUMBER PE-2010000912
PROFESSIONAL ENGINEER
THIS SHEET HAS BEEN SIGNED, SEALED, AND DATED ELECTRONICALLY.

IF A SEAL IS PRESENT ON THIS SHEET IT HAS BEEN ELECTRONICALLY SEALED AND DATED.

DATE PREPARED: 3/25/2026
ROUTE: I-270 | STATE: MO
DISTRICT: SL | SHEET NO.: 2
COUNTY: ST. LOUIS
JOB NO.: J6I3020D
CONTRACT ID.:
PROJECT NO.:
BRIDGE NO.:

DESCRIPTION | DATE

MISSOURI HIGHWAYS AND TRANSPORTATION COMMISSION
105 WEST CAPITOL
JEFFERSON CITY, MO 65102
1-888-ASK-MODOT (1-888-275-6636)

HDR Engineering, Inc.
1001 Highlands Plaza Drive
Suite 200
St. Louis, MO 63110-1337
314-425-8300
Certificate of Authority: 000856

ALTERNATE PAVEMENT DESIGN	
I-270 MAINLINE	
ALTERNATE A	ALTERNATE B
14.5" HMA 2" SP125BSM w/ PG 76-22 OVER 2" SP125B w/ PG 76-22 OVER 10.5" SP190C w/ PG 64-22 12" ROCK BASE	11" PCCP WIDEN SLAB 15 FT. JOINT SPACING, 1 ½ DOWELS 12" ROCK BASE

ALTERNATIVE A WAS USED IN THE COMPUTATION OF EARTHWORK FOR THIS PROJECT.

I-270 FULL DEPTH SHOULDERS	
ALTERNATE C	ALTERNATE D
14.5" HMA 2" SP125BSM w/ PG 76-22 OVER 2" SP125B w/ PG 76-22 OVER 10.5" SP190C w/ PG 64-22 12" ROCK BASE	11" PCCP WIDEN SLAB 15 FT. JOINT SPACING, 1 ½ DOWELS 12" ROCK BASE

ALTERNATIVE C WAS USED IN THE COMPUTATION OF EARTHWORK FOR THIS PROJECT.

I-270 A2 SHOULDERS	
ALTERNATE E	ALTERNATE F
A2 SHOULDER ASPHALT 1.75" BP-1 w/ PG 64-22 OVER 4" PMBB w/ PG 64-22	A2 SHOULDER CONCRETE 5.75" PCCP OR RCC: 7.5 FT. JOINT SPACING, NO DOWELS

ALTERNATIVE E WAS USED IN THE COMPUTATION OF EARTHWORK FOR THIS PROJECT.

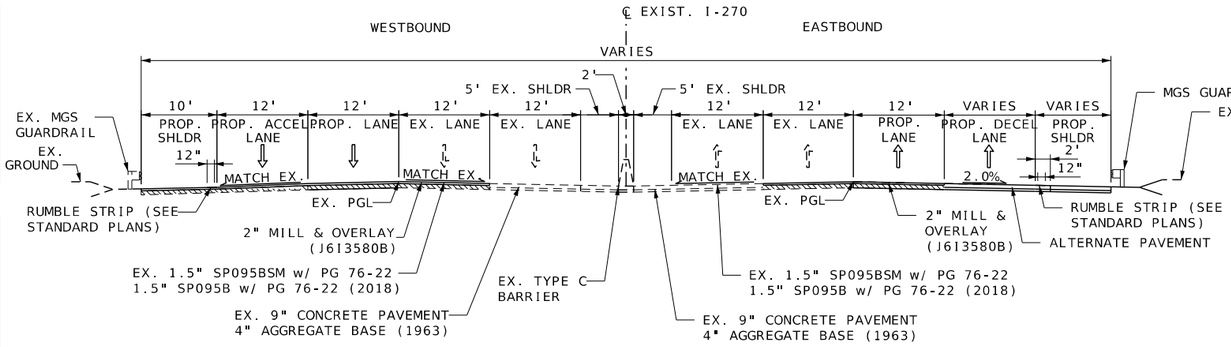

I-270 TANGENT SECTION - PROPOSED
STA 696+50.29 TO STA 699+25.55

ALTERNATE PAVEMENT DESIGN	
LILAC AVENUE	
ALTERNATE G	ALTERNATE H
11.5" HMA 2" SP125CLP w/ PG 70-22 OVER 2" SP125C w/ PG 70-22 OVER 7.5" SP190C w/ PG 64-22 6" TYPE 5 AGGREGATE BASE	11" PCCP 15 FT. JOINT SPACING, 1 ½ DOWELS 6" TYPE 5 AGGREGATE BASE

ALTERNATIVE G WAS USED IN THE COMPUTATION OF EARTHWORK FOR THIS PROJECT.

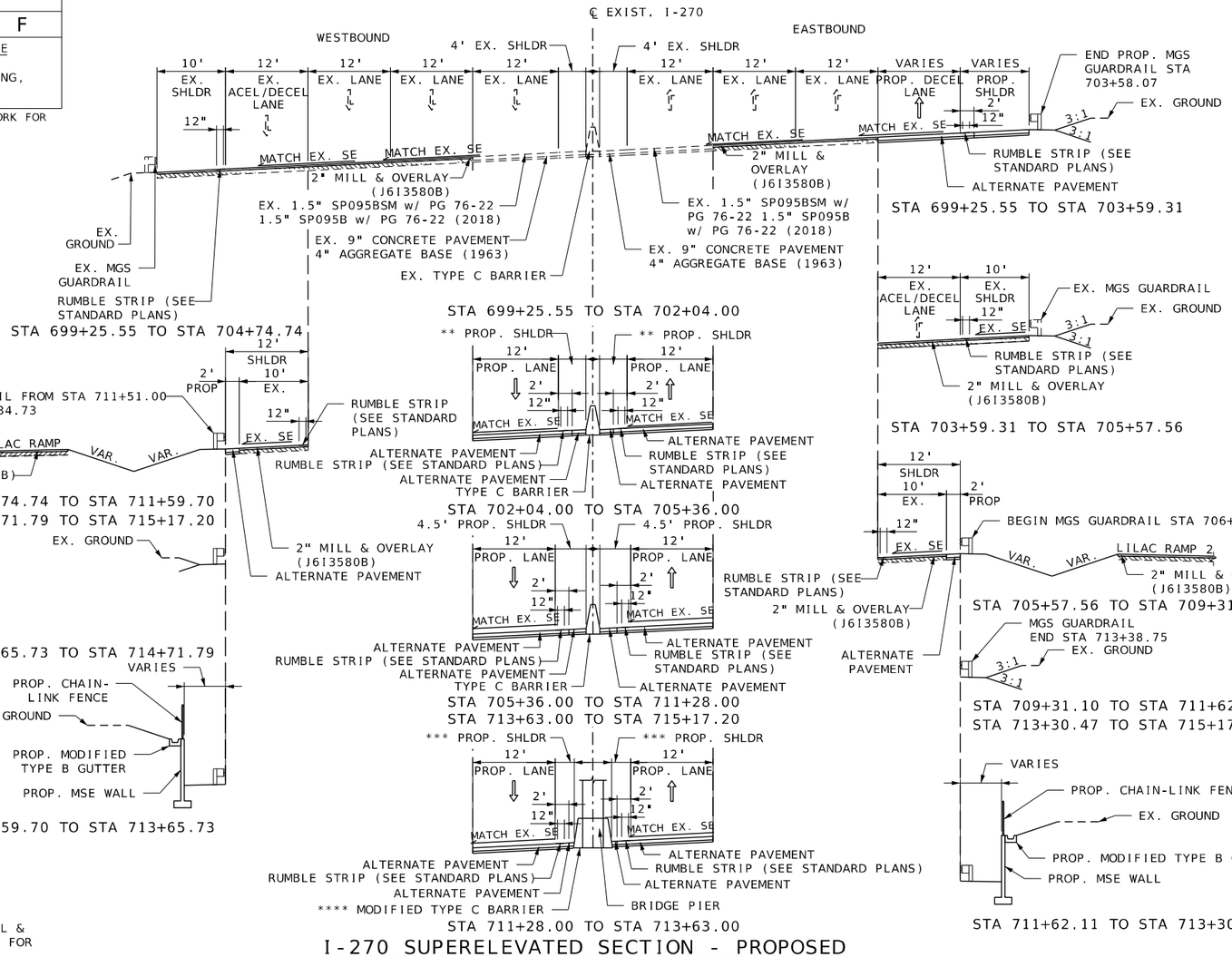

REHAB CONSTRUCTION
LILAC AVE MAINLINE: MILL/FILL 2" SP125CLP w/ PG 70-22
LILAC AVE SHOULDERS: MILL/FILL 2" BP-1 w/ PG 64-22

STA 713+65.73 TO STA 714+71.79

ASPHALT APPLICATION RATES:	
SP125BSM w/ PG 76-22:	1.97 TONS PER CY
SP125CLP w/ PG 70-22:	1.97 TONS PER CY
SP125C w/ PG 70-22:	1.97 TONS PER CY
BP-1 w/ PG 64-22:	1.99 TONS PER CY
TACK COAT:	0.13 GAL PER SY

NOTE: ALL INFORMATION REGARDING THE MILL & OVERLAY OF I-270 AND THE RAMPS IS SHOWN FOR INFORMATION ONLY AND A PART OF J6I3580B.

I-270 SUPERELEVATED SECTION - PROPOSED
STA 699+25.55 TO STA 715+17.20
N.T.S. - FOLLOW DIMENSIONS

** TRANSITION FROM 4' PROPOSED PAVEMENT TO 4.5' PROPOSED PAVEMENT FROM STA 705+06.00 TO STA 705+36.00

*** EASTBOUND SHOULDERS:
TRANSITION FROM 4'-5" SHOULDERS TO 2'-4" SHOULDERS FROM STA 711+28.00 TO STA 712+15.02

VARIES 2'-4" TO 2'-8"SOULDERS FROM STA 712+15.02 TO STA 712+88.02

TRANSITION FROM 2'-8" SHOULDERS TO 4'-5" SHOULDERS FROM STA 712+88.02 TO STA 713+63.00

WESTBOUND SHOULDERS:
TRANSITION FROM 4'-5" SHOULDERS TO 3'-0" SHOULDERS FROM STA 711+28.00 TO STA 712+15.02

VARIES 3'-0" TO 2'-8" SOULDERS FROM STA 712+15.02 TO STA 712+88.02

TRANSITION FROM 2'-8" SHOULDERS TO 4'-5" SHOULDERS FROM STA 712+88.02 TO STA 713+63.00

**** TRANSITION FROM TYPE C BARRIER TO MODIFIED TYPE C BARRIER FROM STA 711+28.00 TO STA 712+15.02

MODIFIED TYPE C BARRIER FROM STA 712+15.02 TO STA 712+88.02

TRANSITION FROM MODIFIED TYPE C BARRIER TO TYPE C BARRIER FROM STA 712+88.02 TO STA 713+63.00

TYPICAL SECTIONS
SHEET 4 OF 8

STATE OF MISSOURI
EUGENE LOUIS KUEKER JR.
NUMBER PE-2011000912
PROFESSIONAL ENGINEER
THIS SHEET HAS BEEN SIGNED, SEALED, AND DATED ELECTRONICALLY.

DATE PREPARED 3/25/2026
ROUTE I-270 | STATE MO
DISTRICT SL | SHEET NO. 2
COUNTY ST. LOUIS
JOB NO. J6I3020D
CONTRACT ID.
PROJECT NO.
BRIDGE NO.

DESCRIPTION	DATE

IF A SEAL IS PRESENT ON THIS SHEET IT HAS BEEN ELECTRONICALLY SEALED AND DATED.

MISSOURI HIGHWAYS AND TRANSPORTATION COMMISSION
105 WEST CAPITOL
JEFFERSON CITY, MO 65102
1-888-ASK-MODOT (1-888-275-6636)

HDR Engineering, Inc.
1001 Highlands Plaza Drive
Suite 200
St. Louis, MO 63110-1337
314-425-8300
Certificate of Authority: 000856

c:\pwworking\central01\d4169511\002_TS04_J6I3020D_I10.dgn 10:02:45 AM 3/25/2026

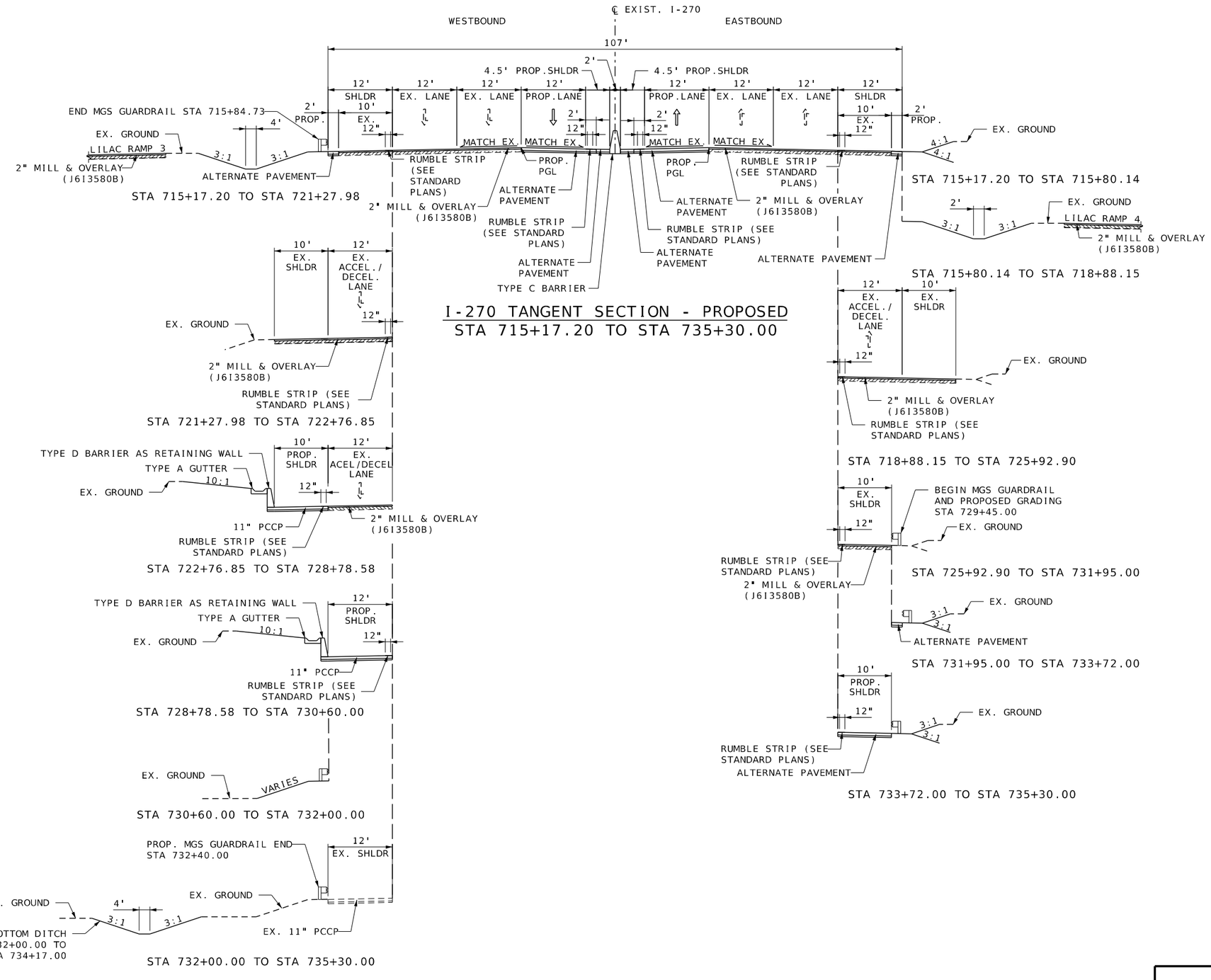

NOTE: ALL INFORMATION REGARDING THE MILL & OVERLAY OF I-270 AND THE RAMPS IS SHOWN FOR INFORMATION ONLY AND A PART OF J6I3580B.

N.T.S. - FOLLOW DIMENSIONS

TYPICAL SECTIONS
SHEET 5 OF 8

STATE OF MISSOURI
EUGENE LOUIS KUEKER JR.
NUMBER PE-2010020912
PROFESSIONAL ENGINEER
THIS SHEET HAS BEEN SIGNED, SEALED, AND DATED ELECTRONICALLY.

IF A SEAL IS PRESENT ON THIS SHEET IT HAS BEEN ELECTRONICALLY SEALED AND DATED.

DATE PREPARED 3/25/2026
ROUTE I-270 | STATE MO
DISTRICT SL | SHEET NO. 2
COUNTY ST. LOUIS
JOB NO. J6I3020D
CONTRACT ID.
PROJECT NO.
BRIDGE NO.

DESCRIPTION | DATE

MISSOURI HIGHWAYS AND TRANSPORTATION COMMISSION
105 WEST CAPITOL
JEFFERSON CITY, MO 65102
1-888-ASK-MODOT (1-888-275-6636)

HDR Engineering, Inc.
1001 Highlands Plaza Drive
Suite 200
St. Louis, MO 63110-1337
314-425-8300
Certificate of Authority: 000856

* TRANSITION FROM 4.5' SHOULDER TO 10' SHOULDERS FROM STA 735+30.00 TO STA 738+60.00

** PGL TO REMAIN BETWEEN LANES 1 & 2, TRANSITION FROM 17'-6" TO 23'-0" FROM STA 738+30.00 TO STA 738+60.00

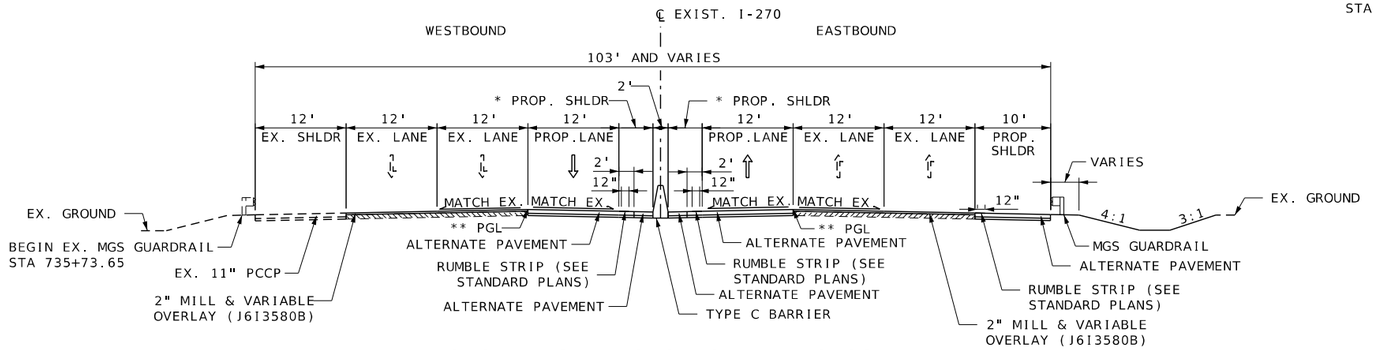

I-270 TANGENT SECTION - PROPOSED
STA 735+30.00 TO STA 738+60.00

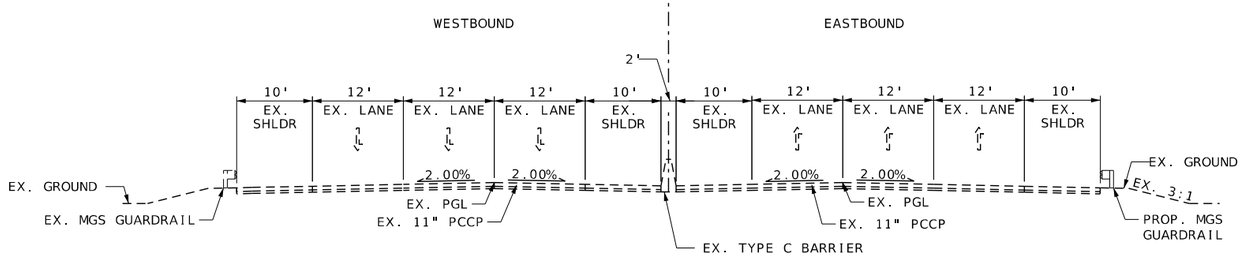

I-270 TANGENT SECTION - PROPOSED
STA 738+60.00 TO STA 746+04.76

NOTE: ALL INFORMATION REGARDING THE MILL & OVERLAY OF I-270 AND THE RAMPS IS SHOWN FOR INFORMATION ONLY AND A PART OF J6I3580B.

N.T.S. - FOLLOW DIMENSIONS

TYPICAL SECTIONS
SHEET 6 OF 8

STATE OF MISSOURI
EUGENE LOUIS KUEKER JR.
NUMBER PE-2011000912
PROFESSIONAL ENGINEER
THIS SHEET HAS BEEN SIGNED, SEALED, AND DATED ELECTRONICALLY.

DATE PREPARED 3/25/2026
ROUTE I-270 | STATE MO
DISTRICT SL | SHEET NO. 2
COUNTY ST. LOUIS
JOB NO. J6I3020D
CONTRACT ID.
PROJECT NO.
BRIDGE NO.

DESCRIPTION | DATE

IF A SEAL IS PRESENT ON THIS SHEET IT HAS BEEN ELECTRONICALLY SEALED AND DATED.

MISSOURI HIGHWAYS AND TRANSPORTATION COMMISSION
105 WEST CAPITOL
JEFFERSON CITY, MO 65102
1-888-ASK-MODOT (1-888-275-6636)

HDR Engineering, Inc.
1001 Highlands Plaza Drive
Suite 200
St. Louis, MO 63110-1337
314-425-8300
Certificate of Authority: 000856

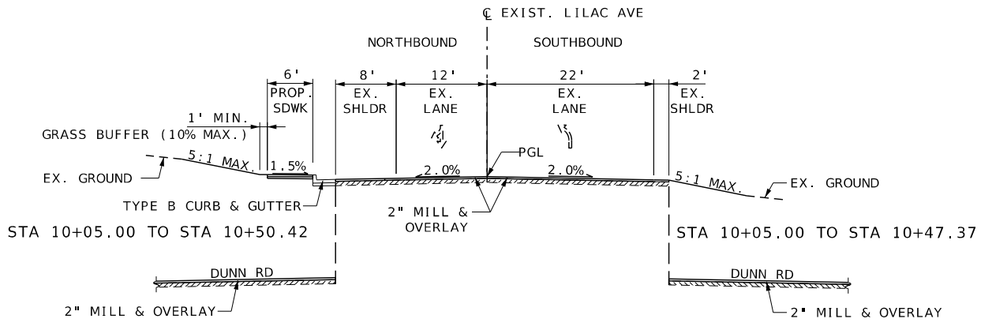

LILAC AVENUE TANGENT SECTION - PROPOSED
STA 10+05.00 TO STA 11+14.99

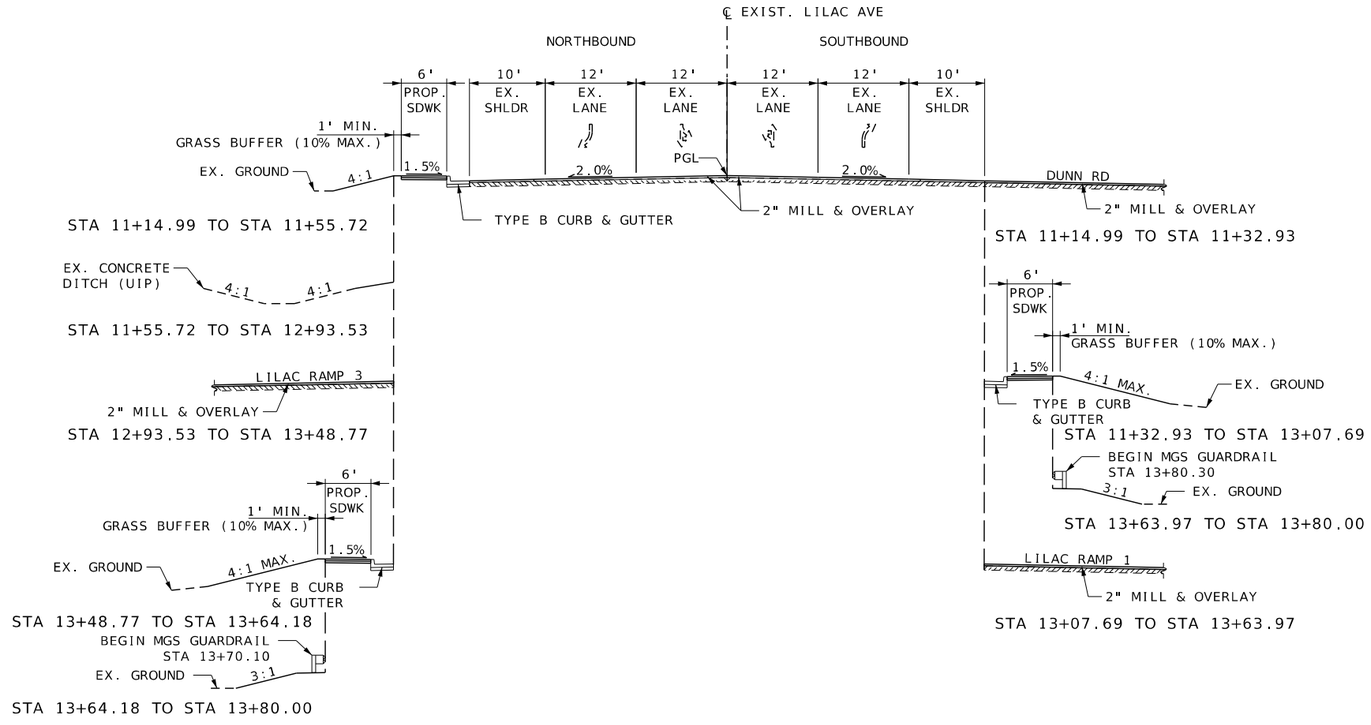

LILAC AVENUE TANGENT SECTION - PROPOSED
STA 11+14.99 TO STA 13+80.00

N.T.S. - FOLLOW DIMENSIONS

TYPICAL SECTIONS
SHEET 7 OF 8

STATE OF MISSOURI
EUGENE LOUIS KUEKER JR.
NUMBER PE-2010009912
PROFESSIONAL ENGINEER
THIS SHEET HAS BEEN SIGNED, SEALED, AND DATED ELECTRONICALLY.

IF A SEAL IS PRESENT ON THIS SHEET IT HAS BEEN ELECTRONICALLY SEALED AND DATED.

DATE PREPARED: 3/25/2026
ROUTE: I-270 | STATE: MO
DISTRICT: SL | SHEET NO.: 2
COUNTY: ST. LOUIS
JOB NO.: J6I3020D
CONTRACT ID.:
PROJECT NO.:
BRIDGE NO.:

DESCRIPTION	DATE

MISSOURI HIGHWAYS AND TRANSPORTATION COMMISSION
105 WEST CAPITOL
JEFFERSON CITY, MO 65102
1-888-ASK-MODOT (1-888-275-6636)

HDR Engineering, Inc.
1001 Highlands Plaza Drive
Suite 200
St. Louis, MO 63110-1337
314-425-8300
Certificate of Authority: 000856

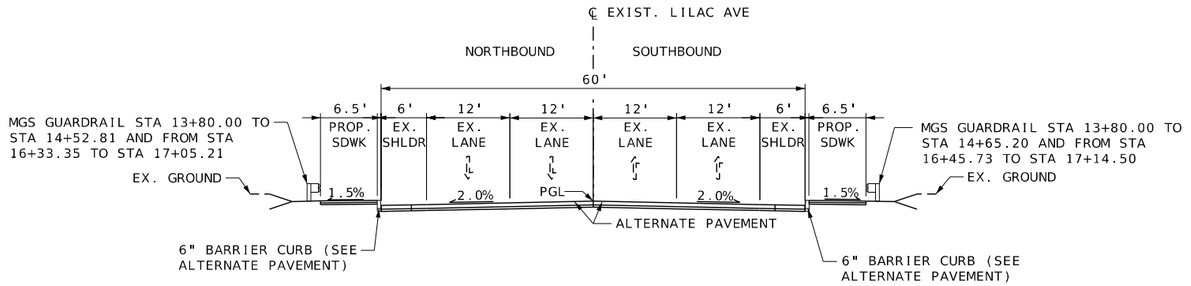

LILAC AVENUE TANGENT SECTION - PROPOSED
STA 13+80.00 TO STA 14+78.50 (FILL FACE)
STA 16+20.05 (FILL FACE) TO STA 17+25.00
BRIDGE EXCEPTION FROM STA 14+78.50 TO STA 16+20.05

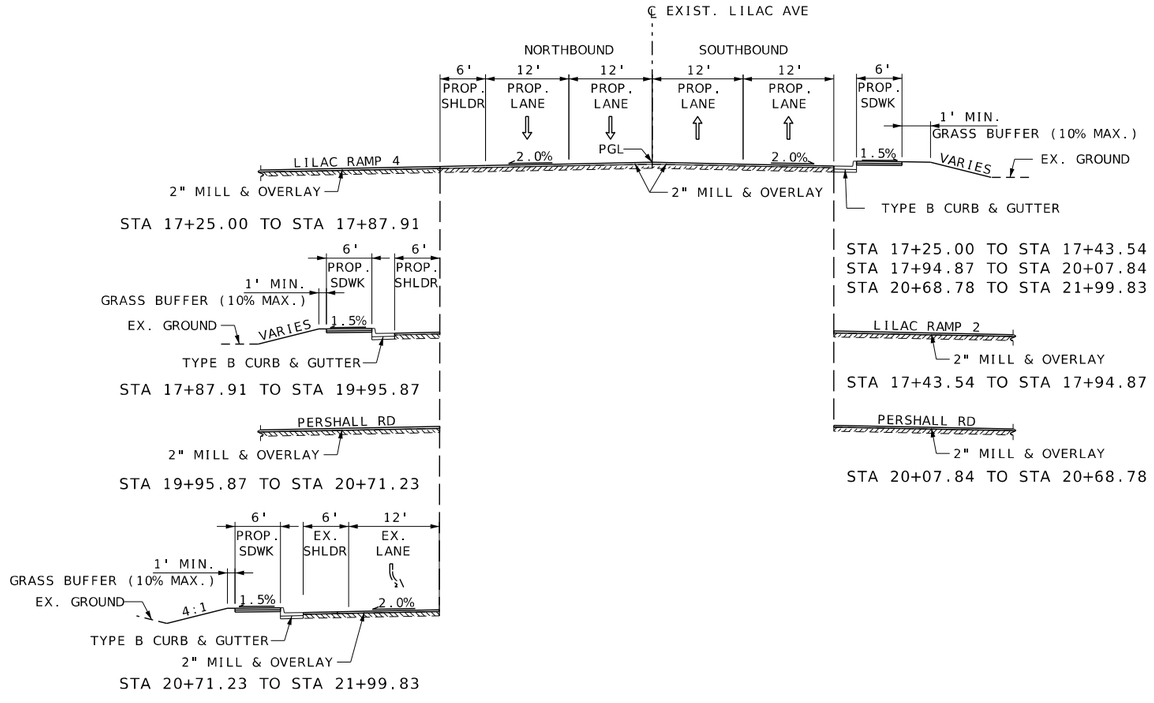

LILAC AVENUE TANGENT SECTION - PROPOSED
STA 17+25.00 TO STA 21+99.83

N.T.S. - FOLLOW DIMENSIONS

ALTERNATE PAVEMENT DESIGN	
I-270 MAINLINE	
ALTERNATE A	ALTERNATE B
14.5" HMA 2" SP125BSM w/ PG 76-22 OVER 2" SP125B w/ PG 76-22 OVER 10.5" SP190C w/ PG 64-22 12" ROCK BASE	11" PCCP WIDEN SLAB 15 FT. JOINT SPACING, 1 ½ DOWELS 12" ROCK BASE

ALTERNATIVE A WAS USED IN THE COMPUTATION OF EARTHWORK FOR THIS PROJECT.

I-270 FULL DEPTH SHOULDERS	
ALTERNATE C	ALTERNATE D
14.5" HMA 2" SP125BSM w/ PG 76-22 OVER 2" SP125B w/ PG 76-22 OVER 10.5" SP190C w/ PG 64-22 12" ROCK BASE	11" PCCP WIDEN SLAB 15 FT. JOINT SPACING, 1 ½ DOWELS 12" ROCK BASE

ALTERNATIVE C WAS USED IN THE COMPUTATION OF EARTHWORK FOR THIS PROJECT.

I-270 A2 SHOULDERS	
ALTERNATE E	ALTERNATE F
A2 SHOULDER ASPHALT 1.75" BP-1 w/ PG 64-22 OVER 4" PMBB w/ PG 64-22	A2 SHOULDER CONCRETE 5.75" PCCP OR RCC: 7.5 FT. JOINT SPACING, NO DOWELS

ALTERNATIVE E WAS USED IN THE COMPUTATION OF EARTHWORK FOR THIS PROJECT.

ALTERNATE PAVEMENT DESIGN	
LILAC AVENUE	
ALTERNATE G	ALTERNATE H
11.5" HMA 2" SP125CLP w/ PG 70-22 OVER 2" SP125C w/ PG 70-22 OVER 7.5" SP190C w/ PG 64-22 6" TYPE 5 AGGREGATE BASE	11" PCCP 15 FT. JOINT SPACING, 1 ½ DOWELS 6" TYPE 5 AGGREGATE BASE

ALTERNATIVE G WAS USED IN THE COMPUTATION OF EARTHWORK FOR THIS PROJECT.

TYPICAL SECTIONS
SHEET 8 OF 8

STATE OF MISSOURI
EUGENE LOUIS KUEKER JR.
NUMBER PE-2011000912
PROFESSIONAL ENGINEER

THIS SHEET HAS BEEN SIGNED, SEALED, AND DATED ELECTRONICALLY.

DATE PREPARED: 3/25/2026
ROUTE: I-270
STATE: MO
DISTRICT: SL
SHEET NO.: 2
COUNTY: ST. LOUIS
JOB NO.: J6I3020D
CONTRACT ID.:
PROJECT NO.:
BRIDGE NO.:

DESCRIPTION	DATE

IF A SEAL IS PRESENT ON THIS SHEET IT HAS BEEN ELECTRONICALLY SEALED AND DATED.

MISSOURI HIGHWAYS AND TRANSPORTATION COMMISSION
105 WEST CAPITOL
JEFFERSON CITY, MO 65102
1-888-ASK-MODOT (1-888-275-6636)

HDR Engineering, Inc.
1001 Highlands Plaza Drive
Suite 200
St. Louis, MO 63110-1337
314-425-8300
Certificate of Authority: 000856

REMOVAL OF IMPROVEMENTS - INFORMATION ONLY

SHEET NO.	FROM STA	TO STA	ROADWAY	LOCATION	DESCRIPTION	REMARKS
7	696+53	703+59	I-270	RT	GUARDRAIL	706 LF
8	708+65	713+41	I-270	RT	GUARDRAIL, MEDIAN	476 LF
8	710+34	712+10	I-270	RT	GUARDRAIL	176 LF
8	711+62	713+63	I-270	LT	GUARDRAIL, MEDIAN	201 LF
8	712+91	714+72	I-270	LT	GUARDRAIL	181 LF
9	722+77	723+83	I-270	LT	GUARDRAIL	106 LF
9, 10	731+95	738+60	I-270	RT	GUARDRAIL	665 LF
11	13+70	14+34	LILAC AVE	LT	GUARDRAIL	64 LF
11	13+80	14+44	LILAC AVE	RT	GUARDRAIL	64 LF
11	16+42	17+05	LILAC AVE	LT	GUARDRAIL	63 LF
11	16+52	17+15	LILAC AVE	RT	GUARDRAIL	63 LF
8, 9, 10	713+32	738+60	I-270	CL	GUARDCABLE	2528 LF
9, 10	734+30	734+51	I-270	CL	TYPE E CRASHWORTHY END TERMINAL	1 EA
7, 8	702+04	708+68	I-270	CL/RT	CONCRETE BARRIER	664 LF
10	738+60	739+60	I-270	RT	TEMPORARY CONCRETE TRAFFIC BARRIER	100 LF
8	712+10	712+80	I-270	RT	CONCRETE BARRIER	70 LF
8	712+22	712+91	I-270	LT	CONCRETE BARRIER	69 LF
7	696+50	703+59	I-270	RT	FULL DEPTH SAWCUT	709 LF
7	702+04		I-270	LT	FULL DEPTH SAWCUT	16 LF
7	702+04		I-270	RT	FULL DEPTH SAWCUT	16 LF
7	704+13	705+57	I-270	RT	FULL DEPTH SAWCUT	146 LF
7	704+13	705+57	I-270	RT	FULL DEPTH SAWCUT	146 LF
7	705+57		I-270	RT	FULL DEPTH SAWCUT	18 LF
7, 8, 9	704+75	721+28	I-270	LT	FULL DEPTH SAWCUT	1653 LF
7, 8	705+58	718+88	I-270	RT	FULL DEPTH SAWCUT	1330 LF
9	722+77		I-270	LT	FULL DEPTH SAWCUT	6 LF
9	722+77	732+00	I-270	LT	FULL DEPTH SAWCUT	923 LF
9	731+95		I-270	RT	FULL DEPTH SAWCUT	4 LF
9, 10	731+95	733+72	I-270	RT	FULL DEPTH SAWCUT	177 LF
9	732+00		I-270	LT	FULL DEPTH SAWCUT	10 LF
9	733+72		I-270	RT	FULL DEPTH SAWCUT	8 LF
9, 10	733+72	738+60	I-270	RT	FULL DEPTH SAWCUT	488 LF
11	13+80		LILAC AVE	LT/RT	FULL DEPTH SAWCUT	60 LF
11	17+25		LILAC AVE	LT/RT	FULL DEPTH SAWCUT	70 LF
11	-		DUNN RD	LT/RT	SAWCUT	39.4 LF
11	-		DUNN RD	LT/RT	SAWCUT	41.6 LF
11	-		RAMP 1	LT/RT	SAWCUT	34.5 LF
11	-		RAMP 2	LT/RT	SAWCUT	36.4 LF
11	-		RAMP 3	LT/RT	SAWCUT	37.1 LF
11	-		RAMP 4	LT/RT	SAWCUT	40.1 LF
11	-		PERSHALL RD	LT/RT	SAWCUT	40.2 LF
11	-		PERSHALL RD	LT/RT	SAWCUT	34.3 LF
8	712+26	712+92	I-270	LT	CONCRETE SLOPE PROTECTION	421 SY
8	712+11	712+75	I-270	RT	CONCRETE SLOPE PROTECTION	317 SY
11	10+05	10+51	LILAC AVE	LT	CURB	46 LF
11	10+05	10+51	LILAC AVE	LT	SIDEWALK	24 SY
7	696+51	703+59	I-270	RT	PAVEMENT REMOVAL	474 SY
7	702+04	706+42	I-270	RT	PAVEMENT REMOVAL	331 SY
7, 8, 9, 10	702+04	734+60	I-270	LT	PAVEMENT REMOVAL	1611 SY
7	704+13	705+58	I-270	RT	PAVEMENT REMOVAL	140 SY
8, 9, 10	708+41	734+60	I-270	RT	PAVEMENT REMOVAL	998 SY
9	726+92	732+00	I-270	LT	PAVEMENT REMOVAL	478 SY
9	731+95	733+47	I-270	RT	PAVEMENT REMOVAL	22 SY
9, 10	733+72	738+60	I-270	RT	PAVEMENT REMOVAL	523 SY
11	13+80	14+39	LILAC AVE	LT/RT	PAVEMENT REMOVAL	392 SY
11	16+59	17+25	LILAC AVE	LT/RT	PAVEMENT REMOVAL	440 SY
11	14+39	14+61	LILAC AVE	LT/RT	APPROACH PAVEMENT	145 SY
11	16+37	16+59	LILAC AVE	LT/RT	APPROACH PAVEMENT	145 SY
11	14+61	14+81	LILAC AVE	LT/RT	APPROACH SLAB	135 SY
11	16+17	16+37	LILAC AVE	LT/RT	APPROACH SLAB	135 SY
TOTAL 1 LUMP SUM						

SUMMARY OF QUANTITIES
SHEET 1 OF 18

STATE OF MISSOURI
EUGENE LOUIS KUELKER JR.
NUMBER PE-2010002912
PROFESSIONAL ENGINEER

THIS SHEET HAS BEEN SIGNED, SEALED, AND DATED ELECTRONICALLY.

DATE PREPARED
3/25/2026

ROUTE	STATE
I-270	MO

DISTRICT	SHEET NO.
SL	3

COUNTY
ST. LOUIS

JOB NO.
J6I3020D

CONTRACT ID.

PROJECT NO.

BRIDGE NO.

DESCRIPTION	DATE

IF A SEAL IS PRESENT ON THIS SHEET IT HAS BEEN ELECTRONICALLY SEALED AND DATED.

MISSOURI HIGHWAYS AND TRANSPORTATION COMMISSION

105 WEST CAPITOL
JEFFERSON CITY, MO 65102
1-888-ASK-MODOT (1-888-275-6636)

HDR Engineering, Inc.
1001 Highlands Plaza Drive
Suite 200
St. Louis, MO 63110-1337
314-425-8300
Certificate of Authority: 000856

REMOVAL OF IMPROVEMENTS - SIGNALS

SHEET NO.	FROM STA	TO STA	ROADWAY	LOCATION	DESCRIPTION	REMARKS
121	12+73		EX. LILAC AVE	37.2' RT	PEDESTAL POLE	
121	12+63		EX. LILAC AVE	36.0' RT	PULL BOX	
121	12+59		EX. LILAC AVE	37.8' LT	PULL BOX	
121	12+62		EX. LILAC AVE	38.1' LT	PULL BOX	
121	12+59		EX. LILAC AVE	51.4' LT	SIGNAL CABINET	
121	12+67		EX. LILAC AVE	36.7 LT	SIGNAL POLE	
121	12+92		EX. LILAC AVE	46.7' LT	PEDESTAL POLE	
121	0+46		EX. RAMP 1	19.7' RT	PULL BOX	
121	0+48		EX. RAMP 1	20.8' RT	SIGNAL POLE	
121	0+61		EX. RAMP 1	32.5' LT	PULL BOX	
121	13+76		EX. LILAC AVE	35.8' RT	SIGNAL POLE	
121	13+77		EX. LILAC AVE	35.5' LT	PULL BOX	
121	13+59		EX. LILAC AVE	40.6' LT	PEDESTAL POLE	
128	17+19		EX. LILAC AVE	37.3' RT	PULL BOX	
128	17+38		EX. LILAC AVE	42.8' RT	PEDESTAL POLE	
128	17+11		EX. LILAC AVE	33.6' LT	SIGNAL POLE	
128	17+15		EX. LILAC AVE	34.8' LT	PULL BOX	
128	17+19		EX. LILAC AVE	46.7' LT	PEDESTAL POLE	
128	18+09		EX. LILAC AVE	44.3' RT	PULL BOX	
128	18+27		EX. LILAC AVE	37.8' RT	SIGNAL POLE	
128	17+93		EX. LILAC AVE	43.8' LT	PULL BOX	
128	17+97		EX. LILAC AVE	40.9' LT	PULL BOX	
128	17+90		EX. LILAC AVE	53.5' LT	SIGNAL POLE	
128	18+00		EX. LILAC AVE	51.5' LT	SIGNAL CABINET	

TOTAL 1 LUMP SUM

REMOVAL OF IMPROVEMENTS - LIGHTING

SHEET NO.	FROM STA	TO STA	ROADWAY	LOCATION	DESCRIPTION	REMARKS
102	6+17		EX. RAMP 2	16.7' RT	LIGHT POLE AND FOUNDATION	
103	9+62		EX. RAMP 2	2.0' RT	LIGHTING PULLBOX	
104	5+27		EX. RAMP 3	32.3' RT	LIGHT POLE AND FOUNDATION	
104	13+52		EX. RAMP 4	23.5' RT	LIGHT POLE AND FOUNDATION	
105	10+20		EX. LILAC AVE	47.5' LT	LIGHTING CONTROLLER W/ POWER SUPPLY	
105	10+25		EX. LILAC AVE	23.8' LT	LIGHT POLE AND FOUNDATION	
105	10+49		EX. LILAC AVE	82.4' RT	LIGHTING CONTROLLER W/ POWER SUPPLY	
105	10+53		EX. LILAC AVE	52.3' LT	LIGHTING PULLBOX	
105	11+26		EX. LILAC AVE	44.6' LT	LIGHTING PULLBOX	
105	11+48		EX. LILAC AVE	38.3' RT	LIGHT POLE AND FOUNDATION	
105	12+85		EX. LILAC AVE	49.9' RT	LIGHT POLE AND FOUNDATION	
105	17+05		EX. LILAC AVE	53.1' LT	LIGHT POLE AND FOUNDATION	
105	19+75		EX. LILAC AVE	30.2' LT	LIGHT POLE AND FOUNDATION	
105	20+96		EX. LILAC AVE	35.3' RT	LIGHT POLE AND FOUNDATION	

TOTAL 1 LUMP SUM

REMOVAL OF IMPROVEMENTS - DRAINAGE

SHEET NO.	FROM STA	TO STA	ROADWAY	LOCATION	DESCRIPTION	REMARKS
72-73	705+34	708+06	I-270	LT	270 LF PAVED DITCH	
74	708+00		I-270	CENTER	INLET	
74	708+01		I-270	LT	INLET	
74	715+20	720+43	I-270	LT	523 LF PAVED DITCH	
74	718+08	720+75	I-270	LT	272 LF PAVED DITCH	
74	718+11		I-270	RT	INLET	
74	718+11		I-270	RT	INLET AND 157 LF OF 24" RCP	
74	720+36	720+40	I-270	LT	INLET AND 45 LF OF 18" PIPE (TO BE ABANDONED AND FILLED)	
74	725+76	734+17	I-270	LT	845 LF PAVED DITCH	
74	730+91	732+00	I-270	RT	110 LF PAVED DITCH	
75	734+28	734+61	I-270	CENTER	INLET AND 33 LF OF 15" RCP	
75	734+28	740+18	I-270	CENTER	500 LF TRENCH DRAIN	
75	736+72	739+35	I-270	RT	264 LF PAVED DITCH	
76	20+05	20+79	LILAC AVE	LT	72 LF 12" PIPE	

TOTAL 1 LUMP SUM

REMOVAL OF IMPROVEMENTS - ITS

SHEET NO.	FROM STA	TO STA	ROADWAY	LOCATION	DESCRIPTION	REMARKS
87	13+00	18+00	LILAC AVE	-	573' - REMOVAL OF EXIST FIBER CABLE	

TOTAL 1 LUMP SUM

REMOVAL OF IMPROVEMENTS - SIGNS

SHEET NO.	STA	ROADWAY	LOCATION	DESCRIPTION	REMARKS
106	663+88	I-270	RT	OVERHEAD SIGN	
106	680+02	I-270	RT	OVERHEAD SIGN	
106	701+05	I-270	LT	SIGN	
106	701+05	I-270	RT	SIGN	
106	702+57	I-270	RT	OVERHEAD SIGN	
106	702+57	I-270	RT	SIGN ON OVERHEAD SIGN POLE	
106	704+02	I-270	RT	SIGN	
107	711+65	I-270	LT	SIGN	
107	711+65	I-270	RT	SIGN	
107	-	I-270	BRIDGE PIER	SIGN	
107	716+34	I-270	LT	SIGN	
108	722+83	I-270	LT	OVERHEAD SIGN	
108	722+83	I-270	LT	SIGN ON OVERHEAD SIGN POLE	
108	723+25	I-270	LT	SIGN	
108	723+25	I-270	RT	SIGN	
108	729+89	I-270	RT	SIGN	
108	731+90	I-270	RT	SIGN	
108	733+96	I-270	LT	SIGN	
108	733+96	I-270	RT	SIGN	
109	739+93	I-270	RT	SIGN	
109	743+24	I-270	RT	SIGN	
107	10+92	RAMP 2	LT	SIGN	
107	11+25	RAMP 2	RT	SIGN	
107	8+45	RAMP 3	RT	SIGN	
107	11+07	RAMP 3	LT	SIGN	
107	11+60	RAMP 3	RT	SIGN	
107	13+15	RAMP 3	RT	SIGN	
107	13+15	RAMP 3	LT	SIGN	
107	2+42	RAMP 4	RT	SIGN	
110	10+43	LILAC AVE	RT	SIGN	
110	10+43	LILAC AVE	RT	SIGN ASSEMBLY	
110	10+46	LILAC AVE	RT	SIGN ASSEMBLY	
110	10+47	LILAC AVE	LT	SIGN ASSEMBLY	
110	11+30	LILAC AVE	RT	SIGN ASSEMBLY	
110	11+30	LILAC AVE	LT	SIGN ASSEMBLY	
110	11+46	LILAC AVE	LT	SIGN	
110	12+52	LILAC AVE	RT	SIGN ASSEMBLY	
110	13+00	LILAC AVE	LT	SIGN ASSEMBLY	
110	13+54	LILAC AVE	LT	SIGN ASSEMBLY	
110	13+90	LILAC AVE	RT	SIGN	
110	14+27	LILAC AVE	RT	SIGN	
110	16+46	LILAC AVE	LT	SIGN ASSEMBLY	
110	16+64	LILAC AVE	LT	SIGN	
110	16+81	LILAC AVE	LT	SIGN	
110	16+85	LILAC AVE	RT	SIGN ASSEMBLY	
110	17+36	LILAC AVE	RT	SIGN	
110	17+88	LILAC AVE	RT	SIGN ASSEMBLY	
110	18+38	LILAC AVE	LT	SIGN ASSEMBLY	
110	19+66	LILAC AVE	RT	SIGN	
110	20+02	LILAC AVE	LT	SIGN ASSEMBLY	
110	20+70	LILAC AVE	RT	SIGN ASSEMBLY	
110	20+76	LILAC AVE	RT	SIGN ASSEMBLY	
110	21+37	LILAC AVE	LT	SIGN ASSEMBLY	
110	21+37	LILAC AVE	LT	SIGN	

TOTAL 1 LUMP SUM

SUMMARY OF QUANTITIES
SHEET 2 OF 18

STATE OF MISSOURI
EUGENE LOUIS KUEVER JR.
NUMBER PE-2010009912
PROFESSIONAL ENGINEER

THIS SHEET HAS BEEN SIGNED, SEALED, AND DATED ELECTRONICALLY.

DATE PREPARED 3/25/2026
ROUTE I-270 | STATE MO
DISTRICT SL | SHEET NO. 3
COUNTY ST. LOUIS
JOB NO. J6I3020D
CONTRACT ID.
PROJECT NO.
BRIDGE NO.

DESCRIPTION	DATE

MISSOURI HIGHWAYS AND TRANSPORTATION COMMISSION
105 WEST CAPITOL
JEFFERSON CITY, MO 65102
1-888-ASK-MODOT (1-888-275-6636)

HDR Engineering, Inc.
1001 Highlands Plaza Drive
Suite 200
St. Louis, MO 63110-1337
314-425-8300
Certificate of Authority: 000856

IF A SEAL IS PRESENT ON THIS SHEET IT HAS BEEN ELECTRONICALLY SEALED AND DATED.

EARTHWORK

SHEET NO.	FROM STA	TO STA	ROADWAY	UNCLASSIFIED EXCAVATION CY	COMPACTING EMBANKMENT CY	EMBANKMENT IN PLACE CY	INCIDENTAL SELECT GRANULAR BACKFILL FOR STRUCTURAL SYSTEMS CY	SELECT GRANULAR BACKFILL FOR STRUCTURAL SYSTEMS CY	COMPACTING IN CUT STA	REMARKS
XS-2 - XS-53	696+50.29	738+60.00	I-270 EB	5,357	4,518		876	538	87.6	GRANULAR BACKFILL FOR WALL A9498
XS-54 - XS97	696+50.29	734+60.00	I-270 WB	10,848	985		2,018	1,267	83.6	GRANULAR BACKFILL FOR WALL A9501
XS-98 - XS107	10+05.00	22+59.61	LILAC AVE	548	13,353	12,805			12.5	
			DETENTION BASIN	3,907	245					
			SUBTOTAL	20,660	19,101	2,103		1,805	183.7	
			PAY TOTAL	20,660	19,101	2,103		1,805	183.7	

NOTE: SWELL FACTOR OF 15% APPLIED TO COMPACTING EMBANKMENT QUANTITY

TEMPORARY EROSION CONTROL (PRECONSTRUCTION) - TABLE 1

SHEET NO.	FROM STA	TO STA	ROADWAY	LOCATION	SILT FENCE LF	TEMPORARY SEEDING ACRE	MULCHING ACRE	ALTERNATE DITCH CHECK LF	CURB INLET CHECK EA	ROCK DITCH CHECK LF	SEDIMENT TRAP ROCK CY	SEDIMENT TRAP EXCAVATION CY	SEDIMENT REMOVAL CY
53, 54	705+33.50	707+88.12	I-270	LT				130					13
54	708+00.20		I-270	CL					1				1
54	708+06.19		I-270	LT						10			1
54	715+19.53	718+19.53	I-270	LT				20					2
54	718+10.52		I-270	CL					1				1
54	720+42.62		I-270	LT						10			1
55	725+75.63	733+82.67	I-270	LT				40					4
55	730+91.20	732+00.88	I-270	RT				20					2
55, 56	732+00.88	734+86.37	I-270	RT				80					8
55, 56	733+82.67	736+85.09	I-270	LT				80					8
55	734+28.13		I-270	CL					1				1
56	734+61.84		I-270	RT					1				1
56	734+62.07		I-270	LT					1				1
56	734+86.37	735+96.65	I-270	RT				10					1
56	735+96.65	736+86.54	I-270	RT				70					7
56	736+85.09	738+84.96	I-270	LT				20					2
56	737+01.77		I-270	RT						10			1
56	739+61.92		I-270	LT						10			1
57	11+27.22		LILAC AVE	LT					1				1
57	11+55.64	12+89.46	LILAC AVE	LT				30					3
57	11+40.08		LILAC AVE	RT				10					1
57	12+94.70		LILAC AVE	RT				10					1
57	20+77.92	21+84.47	LILAC AVE	LT				50					5
57	21+93.26		LILAC AVE	LT						10			
			TABLE 1 SUBTOTAL		0	0	0	570	6	50	0	0	67

TEMPORARY EROSION CONTROL (DURING CONSTRUCTION) - TABLE 2

SHEET NO.	FROM STA	TO STA	ROADWAY	LOCATION	SILT FENCE LF	TEMPORARY SEEDING ACRE	MULCHING ACRE	ALTERNATE DITCH CHECK LF	CURB INLET CHECK EA	ROCK DITCH CHECK LF	SEDIMENT TRAP ROCK CY	SEDIMENT TRAP EXCAVATION CY	SEDIMENT REMOVAL CY
58	696+51.00	703+59.00	I-270	RT	718								72
58	704+20.56		I-270	CL					1				1
58, 59	704+74.66	712+44.43	I-270	LT		0.8	0.8						
58	705+56.75	705+93.18	I-270	RT				4					2
58, 59	705+56.75	707+95.00	I-270	RT		0.1	0.1						
58, 59	705+93.18	708+52.45	I-270	RT				22					11
58	706+12.07		I-270	CL					1				1
59	708+00.42		I-270	CL					1				1
59	708+15.00	711+70.00	I-270	RT	364								36
59	709+26.46	711+51.87	I-270	LT				6					3
59	708+52.45	708+66.96	I-270	RT				4					2
59	708+83.28		I-270	RT						10			1
59	709+16.26	711+50.78	I-270	RT				6					3
59	710+64.47		I-270	CL					1				1
59	711+62.11	712+05.93	I-270	RT		0.1	0.1						
59	712+04.38		I-270	CL					1				1
59	712+79.98	718+78.20	I-270	RT		0.5	0.5						
59, 60	712+98.08	721+27.98	I-270	LT		1.0	1.0						
59	713+30.60	717+50.47	I-270	RT				4					2
59	713+47.63		I-270	CL					1				1
59	713+73.51	720+38.13	I-270	LT				8					4
59	715+91.44		I-270	LT					1				1
59	715+91.44		I-270	RT					1				1
			TABLE 2 SUBTOTAL		1082	2.5	2.5	54	8	10	0	0	144

SUMMARY OF QUANTITIES
SHEET 3 OF 18

STATE OF MISSOURI
EUGENE LOUIS KUEKER JR.
NUMBER PE-2010000912
PROFESSIONAL ENGINEER

THIS SHEET HAS BEEN SIGNED, SEALED, AND DATED ELECTRONICALLY.

DATE PREPARED: 3/25/2026
ROUTE: I-270 | STATE: MO
DISTRICT: SL | SHEET NO.: 3
COUNTY: ST. LOUIS
JOB NO.: J6I3020D
CONTRACT ID.:
PROJECT NO.:
BRIDGE NO.:

DESCRIPTION | DATE

MISSOURI HIGHWAYS AND TRANSPORTATION COMMISSION
105 WEST CAPITOL
JEFFERSON CITY, MO 65102
1-888-ASK-MODOT (1-888-275-6636)

HDR Engineering, Inc.
1001 Highlands Plaza Drive
Suite 200
St. Louis, MO 63110-1337
314-425-8300
Certificate of Authority: 000856

IF A SEAL IS PRESENT ON THIS SHEET IT HAS BEEN ELECTRONICALLY SEALED AND DATED.

TEMPORARY EROSION CONTROL (DURING CONSTRUCTION) - TABLE 3

SHEET NO.	FROM STA	TO STA	ROADWAY	LOCATION	SILT FENCE LF	TEMPORARY SEEDING ACRE	MULCHING ACRE	ALTERNATE DITCH CHECK LF	CURB INLET CHECK EA	ROCK DITCH CHECK LF	SEDIMENT TRAP ROCK CY	SEDIMENT TRAP EXCAVATION CY	SEDIMENT REMOVAL CY
59	718+09.24		I-270	RT					1				1
59	718+10.98		I-270	LT					1				1
59	718+10.98		I-270	RT					1				1
59	718+45.61	718+88.22	I-270	RT				4					2
59	720+38.13	720+68.09	I-270	LT				2					1
59, 60	720+68.09	721+25.00	I-270	LT				2					1
59	720+91.45		I-270	LT					1				1
59	720+91.45		I-270	RT					1				1
60	722+77.00	731+93.00	I-270	LT	925								93
60	722+77.28	734+17.97	I-270	LT		0.5	0.5						
60	723+41.45		I-270	LT					1				1
60	723+41.45		I-270	RT					1				1
60	725+91.44		I-270	LT					1				1
60	725+91.44		I-270	RT					1				1
60	726+00.52		I-270	LT					1				1
60	726+00.52		I-270	LT					1				1
60	728+00.42		I-270	LT					1				1
60	728+00.66		I-270	LT					1				1
60	728+41.44		I-270	LT					1				1
60	728+41.44		I-270	RT					1				1
60	729+35.00	730+85.00	I-270	RT	150								15
60, 61	729+40.00	736+75.00	I-270	RT		0.3	0.3						
60	730+00.52		I-270	LT					1				1
60	730+00.52		I-270	LT					1				1
60	730+91.45		I-270	LT					1				1
60	730+91.45		I-270	RT					1				1
60	732+09.18		I-270	LT							1	1	10
60	733+41.45		I-270	LT					1				1
60	733+41.45		I-270	RT					1				1
60	733+85.55		I-270	LT				4					1
61	734+61.23		I-270	RT							1	1	10
61	737+60.00	739+27.05	I-270	RT	271								27
61	738+16.36		I-270	RT							1	1	10
61	738+47.00	738+96.55	I-270	RT				8					2
61	739+13.94		I-270	RT							1	1	10
61	739+46.11		I-270	RT						10			1
61	740+20.77	741+04.56	I-270	RT		0.1	0.1						
58	8+75.56		RAMP 2	RT					1				1
59	4+63.22		RAMP 3	RT					1				1
59	6+69.59		RAMP 3	RT					1				1
59	9+00.78		RAMP 3	RT					1				1
62	10+05.10	22+59.61	LILAC AVE	RT/LT		0.3	0.3						
62	12+71.22		LILAC AVE	LT					1				1
62	12+72.51		LILAC AVE	RT					1				1
62	12+85.86		LILAC AVE	RT							1	1	10
62	13+02.10		LILAC AVE	LT							1	1	10
62	14+26.58		LILAC AVE	RT					1				1
62	14+26.60		LILAC AVE	LT					1				1
62	14+32.11		LILAC AVE	LT							1	1	10
62	14+38.13		LILAC AVE	RT							1	1	10
62	17+04.27		LILAC AVE	RT					1				1
62	17+04.28		LILAC AVE	LT					1				1
62	17+16.10		LILAC AVE	RT							1	1	10
62	17+19.12		LILAC AVE	LT							1	1	10
62	19+60.93		LILAC AVE	LT					1				1
62	19+60.94		LILAC AVE	RT					1				1
62	20+02.17		LILAC AVE	LT					1				1
62	20+08.44		LILAC AVE	RT							1	1	10
62	20+83.08		LILAC AVE	LT							1	1	10
62	21+71.25		LILAC AVE	RT					1				1
62	21+71.27		LILAC AVE	LT					1				1
62	21+80.65		LILAC AVE	LT							1	1	10
62	21+82.46		LILAC AVE	RT							1	1	10
				TABLE 1 SUBTOTAL	0	0.0	0.0	570	6	50	0	0	67
				TABLE 2 SUBTOTAL	1082	2.5	2.5	54	8	10	0	0	144
				TABLE 3 SUBTOTAL	1346	1.2	1.2	20	36	10	14	14	319
				PAY TOTAL	2428	3.7	3.7	644	50	70	14	14	530

MOBILIZATION
LUMP SUM = 1

GROUND IMPROVEMENTS
LUMP SUM = 1

CONTRACTOR FURNISHED SURVEYING & STAKING
LUMP SUM = 1

ADDITIONAL MOBILIZATION FOR SEEDING	
	EA
PAY TOTAL	2

CLEARING AND GRUBBING

FROM STA	TO STA	ROADWAY	LOCATION	CLEARING AND GRUBBING ACRE
696+50.29	739+50.00	I-270/LILAC	ALL	6
			SUBTOTAL	6
			PAY TOTAL	6

VALVE ADJUSTMENTS

SHEET NO.	STA	ROADWAY	LOCATION	VALVE ADJUSTMENTS EACH	REMARKS
11	10+07.97	LILAC AVE	RT	1	EX. WATER VALVE
11	10+09.92	LILAC AVE	RT	1	EX. WATER VALVE
			SUBTOTAL	2	
			PAY TOTAL	2	

SUMMARY OF QUANTITIES
SHEET 4 OF 18

STATE OF MISSOURI
EUGENE LOUIS KUEKER JR.
NUMBER PE-2010000912
PROFESSIONAL ENGINEER

THIS SHEET HAS BEEN SIGNED, SEALED, AND DATED ELECTRONICALLY.

DATE PREPARED 3/25/2026
ROUTE I-270 | STATE MO
DISTRICT SL | SHEET NO. 3
COUNTY ST. LOUIS
JOB NO. J6I3020D
CONTRACT ID.
PROJECT NO.
BRIDGE NO.

DESCRIPTION | DATE

MISSOURI HIGHWAYS AND TRANSPORTATION COMMISSION
105 WEST CAPITOL
JEFFERSON CITY, MO 65102
1-888-ASK-MODOT (1-888-275-6636)

HDR Engineering, Inc.
1001 Highlands Plaza Drive
Suite 200
St. Louis, MO 63110-1337
314-425-8300
Certificate of Authority: 000856

IF A SEAL IS PRESENT ON THIS SHEET IT HAS BEEN ELECTRONICALLY SEALED AND DATED.

ALTERNATE A (ASPHALT) - PAVEMENT AND BASE - I-270 MAINLINE

SHEET NO.	FROM STA	TO STA	ROADWAY	DIRECTION	LOCATION	14.5 INCH SP125BSM (PG76-22) SY	FURNISHING ROCK BASE (12 INCH) SY	PLACING ROCK BASE (12 INCH) SY	REMARKS
7	696+75.71	703+59.31	I-270	EASTBOUND	RT	643.1	643	643	MAINLINE
7	702+04.00	707+50.00	I-270	EASTBOUND	RT	851.3	851	851	MAINLINE
7	702+04.00	707+50.00	I-270	WESTBOUND	LT	850.4	850	850	MAINLINE
7	704+13.45	705+57.56	I-270	EASTBOUND	RT	140.3	140	140	GORE
8	707+50.00	721+00.00	I-270	EASTBOUND	RT	2102.0	2102	2102	MAINLINE
8	707+50.00	721+00.00	I-270	WESTBOUND	LT	2098.0	2098	2098	MAINLINE
9	721+00.00	734+50.00	I-270	EASTBOUND	RT	2100.0	2100	2100	MAINLINE
9	721+00.00	734+50.00	I-270	WESTBOUND	LT	2100.0	2100	2100	MAINLINE
10	734+50.00	734+60.00	I-270	EASTBOUND	RT	15.6	16	16	MAINLINE
10	734+50.00	734+60.00	I-270	WESTBOUND	LT	15.6	16	16	MAINLINE
					SUBTOTAL	10916.3	10916	10916	
					CONCRETE PAVEMENT SUBTOTAL		1115	1115	
					ALTERNATE C, D SUBTOTAL		2771	2771	
					ALTERNATE E, F SUBTOTAL		662	662	
					PAY TOTAL	10916.3	15464	15464	

ALTERNATE B (CONCRETE) - PAVEMENT AND BASE - I-270 MAINLINE

SHEET NO.	FROM STA	TO STA	ROADWAY	DIRECTION	LOCATION	11" PCCP SY	FURNISHING ROCK BASE (12 INCH) SY	PLACING ROCK BASE (12 INCH) SY	REMARKS
7	696+75.71	703+59.31	I-270	EASTBOUND	RT	643.1	643	643	MAINLINE
7	702+04.00	707+50.00	I-270	EASTBOUND	RT	851.3	851	851	MAINLINE
7	702+04.00	707+50.00	I-270	WESTBOUND	LT	850.4	850	850	MAINLINE
7	704+13.45	705+57.56	I-270	EASTBOUND	RT	140.3	140	140	GORE
8	707+50.00	721+00.00	I-270	EASTBOUND	RT	2102.0	2102	2102	MAINLINE
8	707+50.00	721+00.00	I-270	WESTBOUND	LT	2098.0	2098	2098	MAINLINE
9	721+00.00	734+50.00	I-270	EASTBOUND	RT	2100.0	2100	2100	MAINLINE
9	721+00.00	734+50.00	I-270	WESTBOUND	LT	2100.0	2100	2100	MAINLINE
10	734+50.00	734+60.00	I-270	EASTBOUND	RT	15.6	16	16	MAINLINE
10	734+50.00	734+60.00	I-270	WESTBOUND	LT	15.6	16	16	MAINLINE
					SUBTOTAL	10916.3	10916	10916	
					CONCRETE PAVEMENT SUBTOTAL		1115	1115	
					ALTERNATE C, D SUBTOTAL		2771	2771	
					ALTERNATE E, F SUBTOTAL		662	662	
					PAY TOTAL	10916.3	15464	15464	

SUMMARY OF QUANTITIES
SHEET 5 OF 18

STATE OF MISSOURI
EUGENE LOUIS KUEKER JR.
NUMBER PE-2010009912
PROFESSIONAL ENGINEER

THIS SHEET HAS BEEN SIGNED, SEALED, AND DATED ELECTRONICALLY.

DATE PREPARED 3/25/2026
ROUTE I-270 | STATE MO
DISTRICT SL | SHEET NO. 3
COUNTY ST. LOUIS
JOB NO. J6I3020D
CONTRACT ID.
PROJECT NO.
BRIDGE NO.

DESCRIPTION | DATE

MISSOURI HIGHWAYS AND TRANSPORTATION COMMISSION
105 WEST CAPITOL
JEFFERSON CITY, MO 65102
1-888-ASK-MODOT (1-888-275-6636)

HDR Engineering, Inc.
1001 Highlands Plaza Drive
Suite 200
St. Louis, MO 63110-1337
314-425-8300
Certificate of Authority: 000856

IF A SEAL IS PRESENT ON THIS SHEET IT HAS BEEN ELECTRONICALLY SEALED AND DATED.

ALTERNATE C (ASPHALT) - PAVEMENT AND BASE - I-270 FULL DEPTH SHOULDERS

SHEET NO.	FROM STA	TO STA	ROADWAY	DIRECTION	LOCATION	14.5 INCH SP125BSM (PG76-22) SY	FURNISHING ROCK BASE (12 INCH) SY	PLACING ROCK BASE (12 INCH) SY	BITUMINOUS SHOULDER RUMBLE STRIP STA	REMARKS
7	696+50.29	703+59.31	I-270	EASTBOUND	OUTSIDE	470.8	471	471		
7	702+04.00	707+50.00	I-270	EASTBOUND	INSIDE	134.1	134	134		
7	702+04.00	707+50.00	I-270	WESTBOUND	INSIDE	134.0	134	134		
8	707+50.00	721+00.00	I-270	EASTBOUND	INSIDE	341.9	342	342		
8	707+50.00	721+00.00	I-270	WESTBOUND	INSIDE	345.3	345	345		
9	721+00.00	734+50.00	I-270	EASTBOUND	INSIDE	375.9	376	376		
9	721+00.00	734+50.00	I-270	WESTBOUND	INSIDE	374.1	374	374		
9	731+95.00	734+50.00	I-270	EASTBOUND	OUTSIDE	133.1	133	133		
10	734+50.00	734+60.00	I-270	EASTBOUND	INSIDE	2.8	3	3		
10	734+50.00	738+60.00	I-270	EASTBOUND	OUTSIDE	455.6	456	456		
10	734+50.00	734+60.00	I-270	WESTBOUND	INSIDE	2.8	3	3		
7	702+04.00	707+50.00	I-270	WESTBOUND	INSIDE				5.5	
7	702+04.00	707+50.00	I-270	EASTBOUND	INSIDE				5.5	
8	707+50.00	721+00.00	I-270	EASTBOUND	INSIDE				13.5	
8	707+50.00	721+00.00	I-270	WESTBOUND	INSIDE				13.5	
9	721+00.00	734+50.00	I-270	EASTBOUND	INSIDE				13.5	
9	721+00.00	734+50.00	I-270	WESTBOUND	INSIDE				13.5	
9	733+72.00	734+50.00	I-270	EASTBOUND	OUTSIDE				0.8	
10	734+50.00	738+60.00	I-270	EASTBOUND	OUTSIDE				4.1	
10	734+50.00	734+60.00	I-270	EASTBOUND	INSIDE				0.1	
10	734+50.00	734+60.00	I-270	WESTBOUND	INSIDE				0.1	
					SUBTOTAL	2770.4	2771	2771	70.1	
					PAY TOTAL	2770.4			70.1	

ALTERNATE D (CONCRETE) - PAVEMENT AND BASE - I-270 FULL DEPTH SHOULDERS

SHEET NO.	FROM STA	TO STA	ROADWAY	DIRECTION	LOCATION	11" PCCP SY	FURNISHING ROCK BASE 12 INCH SY	PLACING ROCK BASE 12 INCH SY	PORTLAND CEMENT CONCRETE SHOULDER RUMBLE STRIP STA	REMARKS
7	696+50.29	703+59.31	I-270	EASTBOUND	OUTSIDE	470.8	471	471		
7	702+04.00	707+50.00	I-270	EASTBOUND	INSIDE	134.1	134	134		
7	702+04.00	707+50.00	I-270	WESTBOUND	INSIDE	134.0	134	134		
8	707+50.00	721+00.00	I-270	EASTBOUND	INSIDE	341.9	342	342		
8	707+50.00	721+00.00	I-270	WESTBOUND	INSIDE	345.3	345	345		
9	721+00.00	734+50.00	I-270	EASTBOUND	INSIDE	375.9	376	376		
9	721+00.00	734+50.00	I-270	WESTBOUND	INSIDE	374.1	374	374		
9	731+95.00	734+50.00	I-270	EASTBOUND	OUTSIDE	133.1	133	133		
10	734+50.00	734+60.00	I-270	EASTBOUND	INSIDE	2.8	3	3		
10	734+50.00	734+60.00	I-270	WESTBOUND	INSIDE	2.8	3	3		
10	734+50.00	738+60.00	I-270	EASTBOUND	OUTSIDE	455.6	456	456		
7	702+04.00	707+50.00	I-270	WESTBOUND	INSIDE				5.5	
7	702+04.00	707+50.00	I-270	EASTBOUND	INSIDE				5.5	
8	707+50.00	721+00.00	I-270	EASTBOUND	INSIDE				13.5	
8	707+50.00	721+00.00	I-270	WESTBOUND	INSIDE				13.5	
9	721+00.00	734+50.00	I-270	EASTBOUND	INSIDE				13.5	
9	721+00.00	734+50.00	I-270	WESTBOUND	INSIDE				13.5	
9	733+72.00	734+50.00	I-270	EASTBOUND	OUTSIDE				0.8	
10	734+50.00	738+60.00	I-270	EASTBOUND	OUTSIDE				4.1	
10	734+50.00	734+60.00	I-270	EASTBOUND	INSIDE				0.1	
10	734+50.00	734+60.00	I-270	WESTBOUND	INSIDE				0.1	
					SUBTOTAL	2770.4	2771	2771	70.1	
					PAY TOTAL	2770.4			70.1	

SUMMARY OF QUANTITIES
SHEET 6 OF 18

STATE OF MISSOURI
EUGENE LOUIS KUEKER JR.
NUMBER PE-2011000912
PROFESSIONAL ENGINEER

THIS SHEET HAS BEEN SIGNED, SEALED, AND DATED ELECTRONICALLY.

IF A SEAL IS PRESENT ON THIS SHEET IT HAS BEEN ELECTRONICALLY SEALED AND DATED.

DATE PREPARED
3/25/2026

ROUTE	STATE
I-270	MO

DISTRICT	SHEET NO.
SL	3

COUNTY
ST. LOUIS

JOB NO.
J6I3020D

CONTRACT ID.

PROJECT NO.

BRIDGE NO.

DESCRIPTION	DATE

MISSOURI HIGHWAYS AND TRANSPORTATION COMMISSION

105 WEST CAPITOL
JEFFERSON CITY, MO 65102
1-888-ASK-MODOT (1-888-275-6636)

HDR Engineering, Inc.
1001 Highlands Plaza Drive
Suite 200
St. Louis, MO 63110-1337
314-425-8300
Certificate of Authority: 000856

ALTERNATE E (ASPHALT) - PAVEMENT AND BASE - I-270 A2 SHOULDERS

SHEET NO.	FROM STA	TO STA	ROADWAY	DIRECTION	LOCATION	A2 SHOULDER ASPHALT SY	FURNISHING ROCK BASE (12 INCH) SY	PLACING ROCK BASE (12 INCH) SY	REMARKS
7	704+74.74	707+50.00	I-270	WESTBOUND	OUTSIDE	59.9	60	60	
7	705+57.56	707+50.00	I-270	EASTBOUND	OUTSIDE	43.0	43	43	
8	707+50.00	718+88.15	I-270	EASTBOUND	OUTSIDE	253.8	254	254	
8	707+50.00	721+00.00	I-270	WESTBOUND	OUTSIDE	298.6	299	299	
8	721+00.00	721+27.64	I-270	WESTBOUND	OUTSIDE	5.7	6	6	
					SUBTOTAL	661	662	662	
					PAY TOTAL	661			

ALTERNATE F (CONCRETE) - PAVEMENT AND BASE - I-270 A2 SHOULDERS

SHEET NO.	FROM STA	TO STA	ROADWAY	DIRECTION	LOCATION	A2 SHOULDER CONCRETE SY	FURNISHING ROCK BASE (12 INCH) SY	PLACING ROCK BASE (12 INCH) SY	REMARKS
7	704+74.74	707+50.00	I-270	WESTBOUND	OUTSIDE	59.9	60	60	
7	705+57.56	707+50.00	I-270	EASTBOUND	OUTSIDE	43.0	43	43	
8	707+50.00	718+88.15	I-270	EASTBOUND	OUTSIDE	253.8	254	254	
8	707+50.00	721+00.00	I-270	WESTBOUND	OUTSIDE	298.6	299	299	
8	721+00.00	721+27.64	I-270	WESTBOUND	OUTSIDE	5.7	6	6	
					SUBTOTAL	661	662	662	
					PAY TOTAL	661			

SUMMARY OF QUANTITIES
SHEET 7 OF 18

STATE OF MISSOURI
EUGENE LOUIS KUEKER JR.
NUMBER PE-2011009912
PROFESSIONAL ENGINEER

THIS SHEET HAS BEEN SIGNED, SEALED, AND DATED ELECTRONICALLY.

DATE PREPARED
3/25/2026

ROUTE	STATE
I-270	MO
DISTRICT	SHEET NO.
SL	3

COUNTY
ST. LOUIS

JOB NO.
J6I3020D

CONTRACT ID.

PROJECT NO.

BRIDGE NO.

DESCRIPTION	DATE

IF A SEAL IS PRESENT ON THIS SHEET IT HAS BEEN ELECTRONICALLY SEALED AND DATED.

MISSOURI HIGHWAYS AND TRANSPORTATION COMMISSION

105 WEST CAPITOL
JEFFERSON CITY, MO 65102
1-888-ASK-MODOT (1-888-275-6636)

HDR Engineering, Inc.
1001 Highlands Plaza Drive
Suite 200
St. Louis, MO 63110-1337
314-425-8300
Certificate of Authority: 000856

ALTERNATE G (ASPHALT) - PAVEMENT AND BASE - LILAC AVE

SHEET NO.	FROM STA	TO STA	ROADWAY	DIRECTION	LOCATION	11.5 INCH SP125CLP (PG 70-22) SY	6" TYPE 5 AGGREGATE FOR BASE SY	CONCRETE CURB (6 IN. HEIGHT AND UNDER) TYPE S LF	REMARKS
11	13+80.00	14+38.78	LILAC AVE	NB/SB	LT/RT	391.8	392		
11	16+59.03	17+25.00	LILAC AVE	NB/SB	LT/RT	440.1	440		
11	13+66.07	14+38.78	LILAC AVE	NB	LT			73	
11	13+78.43	14+38.78	LILAC AVE	SB	RT			60	
11	16+59.77	17+10.92	LILAC AVE	NB	LT			51	
11	16+59.77	17+28.55	LILAC AVE	SB	RT			69	
					SUBTOTAL	831.9	832	253	
					PAY TOTAL	831.9	832	253	

ALTERNATE H (CONCRETE) - PAVEMENT AND BASE - LILAC AVE

SHEET NO.	FROM STA	TO STA	ROADWAY	DIRECTION	LOCATION	11" PCCP SY	6" TYPE 5 AGGREGATE FOR BASE SY	INTEGRAL CURB (6 IN. HEIGHT AND UNDER) TYPE A LF	REMARKS
11	13+80.00	14+38.78	LILAC AVE	NB/SB	LT/RT	391.8	392		
11	16+59.03	17+25.00	LILAC AVE	NB/SB	LT/RT	440.1	440		
11	13+66.07	14+38.78	LILAC AVE	NB	LT			73	
11	13+78.43	14+38.78	LILAC AVE	SB	RT			60	
11	16+59.77	17+10.92	LILAC AVE	NB	LT			51	
11	16+59.77	17+28.55	LILAC AVE	SB	RT			69	
					SUBTOTAL	831.9	832	253	
					PAY TOTAL	831.9	832	253	

SUMMARY OF QUANTITIES
SHEET 8 OF 18

STATE OF MISSOURI
EUGENE LOUIS KUEKER JR.
NUMBER PE-2011000912
PROFESSIONAL ENGINEER

THIS SHEET HAS BEEN SIGNED, SEALED, AND DATED ELECTRONICALLY.

DATE PREPARED: 3/25/2026
ROUTE: I-270 | STATE: MO
DISTRICT: SL | SHEET NO.: 3
COUNTY: ST. LOUIS
JOB NO.: J6I3020D
CONTRACT ID.:
PROJECT NO.:
BRIDGE NO.:

DESCRIPTION | DATE

IF A SEAL IS PRESENT ON THIS SHEET IT HAS BEEN ELECTRONICALLY SEALED AND DATED.

MISSOURI HIGHWAYS AND TRANSPORTATION COMMISSION

105 WEST CAPITOL
JEFFERSON CITY, MO 65102
1-888-ASK-MODOT (1-888-275-6636)

HDR Engineering, Inc.
1001 Highlands Plaza Drive
Suite 200
St. Louis, MO 63110-1337
314-425-8300
Certificate of Authority: 000856

MILL & OVERLAY

SHEET NO.	FROM STA	TO STA	ROADWAY	DIRECTION	LOCATION	AREAS FYI	COLDMILLING BITUMINOUS PAVEMENT FOR REMOVAL OF SURFACING (3 IN. THICK OR LESS) SY	2 INCH SP125CLP (PG70-22) TON	2 INCH BP-1 (PG64-22) TON	TACK COAT GAL	REMARKS
11	10+05.00	13+80.00	LILAC AVE	BOTH	LT/RT	25294.1	2810	307.5		365	MAINLINE
11	17+25.00	22+00.00	LILAC AVE	BOTH	LT/RT	34048.7	3783	414.0		492	MAINLINE
11	10+05.00	10+90.59	LILAC AVE	SOUTHBOUND	RT	641.8	71		7.8	9	SHOULDER
11	10+05.00	10+69.08	LILAC AVE	NORTHBOUND	LT	873.8	97		10.7	13	SHOULDER
11	10+90.37	13+14.03	LILAC AVE	NORTHBOUND	LT	2329.2	259		28.6	34	SHOULDER
11	11+12.96	13+35.04	LILAC AVE	SOUTHBOUND	RT	2014.6	224		24.8	29	SHOULDER
11	13+39.52	13+80.00	LILAC AVE	NORTHBOUND	LT	450.3	50		5.5	7	SHOULDER
11	13+51.26	13+80.00	LILAC AVE	SOUTHBOUND	RT	256.6	29		3.2	4	SHOULDER
11	17+25.00	17+48.28	LILAC AVE	SOUTHBOUND	RT	204.1	23		2.5	3	SHOULDER
11	17+25.00	17+35.60	LILAC AVE	NORTHBOUND	LT	188.6	21		2.3	3	SHOULDER
11	17+56.68	20+17.61	LILAC AVE	NORTHBOUND	LT	1667.3	185		20.5	24	SHOULDER
11	17+71.80	20+15.97	LILAC AVE	SOUTHBOUND	RT	2465.5	274		30.3	36	SHOULDER
11	20+61.67	22+00.00	LILAC AVE	NORTHBOUND	LT	555.0	62		6.9	8	SHOULDER
						SUBTOTAL	7888	721.5	143.1	1027	
						PAY TOTAL	7888	721.5	143.1	1027	

CONCRETE PAVEMENT

SHEET NO.	FROM STA	TO STA	ROADWAY	DIRECTION	LOCATION	11" PCCP SY	FURNISHING ROCK BASE 12 INCH SY	PLACING ROCK BASE 12 INCH SY	PORTLAND CEMENT CONCRETE SHOULDER RUMBLE STRIP STA	REMARKS
9	722+76.85	732+00.00	I-270	WESTBOUND	OUTSIDE	1115.3	1115	1115	9.2	MOMENT SLAB
					SUBTOTAL	1115.3	1115	1115	9.2	
					PAY TOTAL	1115.3			9.2	

DRAINAGE EROSION CONTROL

SHEET NO.	FROM STA	TO STA	ROADWAY	PERIMETER FT (FYI)	AREA SF (FYI)	EROSION CONTROL HEIGHT FT (FYI)	LOC.	TURF TYPE TALL FESCUE SODDING SY	SEEDING - COOL SEASON GRASSES ACRE	TYPE 1 ROCK BLANKET FURN. CY	TYPE 1 ROCK BLANKET PLAC. CY	FURNISHING TYPE 2 ROCK DITCH LINER CY	PLACING TYPE 2 ROCK DITCH LINER CY	FURNISHING TYPE 3 ROCK DITCH LINER CY	PLACING TYPE 3 ROCK DITCH LINER CY	BEDDING MATERIAL FOR ROCK DITCH LINER CY	PERMANENT EROSION CONTROL GEOTEXTILE SY	SEPARATION GEOTEXTILE SY
63	696+50.29	703+58.86	I-270	1562.2	28164.5		RT			1565	1565						3390	
63	698+70.00	707+50.00	I-270			1.5	RT					242	242				726	
63, 64	705+30.00	708+00.00	I-270			1.5	LT							162	162	59	265	
64	707+95.00	711+62.10	I-270	869.8	15435.1		RT			858	858						1860	
66	736+75.00	736+80.00	I-270	495.8	8585.3		RT			477	477						1037	
66	737+40.00	738+80.00	I-270			-	RT					189	189				566	
63, 64, 65, 66	704+74.66	739+50.00	I-270		177286.9		ALL		4.1									
66	740+20.77	741+04.56	I-270		3663.0		RT		0.1									
64	6+70.00	9+00.00	RAMP 3			1.0	RT					68	68				203	
67	10+05.10	22+59.61	LILAC AVE		15865.7		ALL		0.4									
67	10+05.10	10+38.72	LILAC AVE				LT	19										
8	711+59.70	713+65.73	MSE WALL A9398	518.0	9021.0		LT											1089
8	711+62.11	713+30.47	MSE WALL A9498	404.0	4938.1		RT											616
							SUBTOTAL	19	4.6	2900	2900	499	499	162	162	59	8047	1705
							PAY TOTAL	19	4.6	2900	2900	499	499	162	162	59	8047	1705

PERMANENT STRIPING

SHEET	ROADWAY	6" WHITE 25-MIL, TYPE L BEADS SOLID LF	6" YELLOW 25-MIL, TYPE L BEADS SOLID LF	4" WHITE 18-MIL, TYPE P BEADS SOLID LF	4" WHITE 18-MIL, TYPE P BEADS INTER LF	4" YELLOW 18-MIL, TYPE P BEADS SOLID LF	PERFORMED THERMOPLASTIC PAVEMENT MARKING 24" SOLID WHITE STOP BAR EA	2' X 6' CROSSWALK EA	COMBINATION STR/LT/RT ARROW EA	LEFT/RIGHT ARROW EA
83	RAMP 1	38	25					10		
83	RAMP 2	61	18				35	9		
83	RAMP 3	68	24				35	10		
83	RAMP 4	35	23					11		
83	LILAC AVE			3363	116	1467	144	60	3	9
83	DUNN RD			149		136	34	12		
83	PERSHALL RD			214		36	27	23		
	TOTAL LENGTH	202	90	3726	116	1639	275	135	3	9
	ADJUSTMENT FACTOR	1	1	1	0.25	1	1	1	1	1
	SUBTOTAL	202	90	3726	29	1639	275	135	3	9
	PAY TOTAL	202	90	3755		1639	275	135	3	9

SUMMARY OF QUANTITIES
SHEET 9 OF 18

STATE OF MISSOURI
EUGENE LOUIS KUEKER JR.
NUMBER PE-2010000912
PROFESSIONAL ENGINEER

THIS SHEET HAS BEEN SIGNED, SEALED, AND DATED ELECTRONICALLY.

DATE PREPARED 3/25/2026
ROUTE I-270 | STATE MO
DISTRICT SL | SHEET NO. 3
COUNTY ST. LOUIS
JOB NO. J6I3020D
CONTRACT ID.
PROJECT NO.
BRIDGE NO.

DESCRIPTION | DATE

MISSOURI HIGHWAYS AND TRANSPORTATION COMMISSION
105 WEST CAPITOL
JEFFERSON CITY, MO 65102
1-888-ASK-MODOT (1-888-275-6636)

HDR Engineering, Inc.
1001 Highlands Plaza Drive
Suite 200
St. Louis, MO 63110-1337
314-425-8300
Certificate of Authority: 000856

IF A SEAL IS PRESENT ON THIS SHEET IT HAS BEEN ELECTRONICALLY SEALED AND DATED.

CURB AND GUTTER

SHEET NO.	FROM STA	TO STA	ROADWAY	LOCATION	CONCRETE GUTTER TYPE A LF	MODIFIED CONCRETE GUTTER TYPE B LF	CURB AND GUTTER TYPE B LF	REMARKS
8	711+62.11	713+30.47	I-270	A9498		168		ON MSE WALL
8	711+59.70	713+65.73	I-270	A9501		206		ON MSE WALL
9	722+77.28	730+60.00	I-270	LT	783			ON TYPE D BARRIER
11	10+05.00	10+39.65	LILAC AVE	LT			35	
11	11+26.41	12+82.40	LILAC AVE	LT			156	
11	11+45.49	12+94.58	LILAC AVE	RT			149	
11	13+66.07	14+38.78	LILAC AVE	LT				
11	13+78.43	14+38.78	LILAC AVE	RT				
11	16+59.77	17+10.92	LILAC AVE	LT				
11	16+59.77	17+28.55	LILAC AVE	RT				
11	18+02.90	19+81.53	LILAC AVE	LT			179	
11	18+07.10	19+97.42	LILAC AVE	RT			190	
11	20+81.54	21+92.94	LILAC AVE	LT			111	
11	20+81.36	21+99.02	LILAC AVE	RT			118	
				SUBTOTAL	783	374	938	
				PAY TOTAL	783	374	938	

SIGN MOUNTING BRACKET

SHEET NO.	STA	ROADWAY	LOCATION	SIGN MOUNTING BRACKET FOR BARRIER WALL EA
108	723+25.00	I-270	LT	1
108	724+42.00	I-270	LT	1
			SUBTOTAL	2
			PAY TOTAL	2

REMOVAL AND RELOCATION OVERHEAD SIGNS

SHEET NO.	ROADWAY	LOCATION	REMOVAL AND RELOCATION OF OVERHEAD SIGNS EA	REMARKS
107	I-270 WB	LILAC BRIDGE	1	SIGN NO. 18
107	I-270 EB	LILAC BRIDGE	1	SIGN NO. 10
		SUBTOTAL	2	
		PAY TOTAL	2	

GUARDRAIL

SHEET NO.	FROM STA	TO STA	LOCATION	ROADWAY	MGS GUARDRAIL LF	MGS BRIDGE APPROACH TRANSITION (REGULAR/NO CURB) EA	MGS VERTICAL CONC. BARRIER TRANSITION EA	TYPE A CRASHWORTHY END TERMINAL (MASH) EA	MGS END ANCHOR EA	SHAPING SLOPES, CLASS III 100F
7	696+50.29	703+58.86	RT	I-270	675	1				
7, 8	706+10.00	713+38.75	RT	I-270	675			1	1	
8	711+51.00	715+84.73	LT	I-270	375			1	1	
9	730+60.00	732+40.00	LT	I-270	12.5		1	1		
9, 10	729+45.00	746+04.76	RT	I-270	1600			1	1	17
11	13+75.67	14+64.31	LT	LILAC AVE	12.5	1		1		
11	13+80.30	14+76.69	RT	LILAC AVE	12.5	1		1		
11	16+21.85	17+10.49	LT	LILAC AVE	12.5	1		1		
11	16+34.24	17+22.87	RT	LILAC AVE	12.5	1		1		
				SUBTOTAL	3388	5	1	8	3	17
				PAY TOTAL	3388	5	1	8	3	17

NOTE: ALL GRADING FOR MASH CWETs, AS PAID FOR WITH MODIFIED SHAPING SLOPES - CLASS III, SHALL USE ALTERNATE GRADING LIMITS AS SHOWN IN THE STD. PLANS.

CONCRETE APPROACH PAVEMENT

SHEET NO.	FROM STA	TO STA	ROADWAY	LOCATION	CONC. APPROACH PAVEMENT SY	TYPE 5 AGGREGATE FOR BASE (4 IN. THICK) SY
11	14+38.78	14+59.00	LILAC AVE	RT/LT	134.9	135
11	16+39.54	16+59.77	LILAC AVE	RT/LT	134.9	135
				SUBTOTAL	269.8	270
				PAY TOTAL	269.8	

NOTE: COST OF FURNISHING AND PLACEMENT OF 4" TYPE 5 AGGREGATE BASE AND 3/4" JOINT FILLER IS INCLUDED IN THE CONTRACT UNIT PRICE FOR CONCRETE APPROACH PAVEMENT.

CONCRETE TRAFFIC BARRIER

SHEET NO.	FROM STA	TO STA	ROADWAY	LOCATION	TYPE 'C' LF	TYPE 'C' (MODIFIED) LF	TYPE 'D' RETAINING WALL LF
7, 8	702+04.00	711+28.00	I-270	CL	924		
8	711+28.00	713+63.00	I-270	CL		235	
8, 9, 10	713+63.00	740+17.93	I-270	CL	2655		
9	722+77.28	730+60.00	I-270	LT			783
				SUBTOTAL	3579	235	783
				PAY TOTAL	3579	235	783

SUMMARY OF QUANTITIES
SHEET 10 OF 18

STATE OF MISSOURI
EUGENE LOUIS KUEKER JR.
NUMBER PE-2010000912
PROFESSIONAL ENGINEER

THIS SHEET HAS BEEN SIGNED, SEALED, AND DATED ELECTRONICALLY.

DATE PREPARED: 3/25/2026
ROUTE: I-270 | STATE: MO
DISTRICT: SL | SHEET NO.: 3
COUNTY: ST. LOUIS
JOB NO.: J6I3020D
CONTRACT ID.:
PROJECT NO.:
BRIDGE NO.:

DESCRIPTION | DATE

MISSOURI HIGHWAYS AND TRANSPORTATION COMMISSION
105 WEST CAPITOL
JEFFERSON CITY, MO 65102
1-888-ASK-MODOT (1-888-275-6636)

HDR Engineering, Inc.
1001 Highlands Plaza Drive
Suite 200
St. Louis, MO 63110-1337
314-425-8300
Certificate of Authority: 000856

IF A SEAL IS PRESENT ON THIS SHEET IT HAS BEEN ELECTRONICALLY SEALED AND DATED.

FENCE

SHEET NO.	FROM STA	TO STA	ROADWAY	LOCATION	CHAIN-LINK FENCE (RETAINING WALLS) LF	CHAIN-LINK FENCE (60 IN.) LF	BLACK POWDER COATED CHAIN-LINK FENCE (60 IN.) LF	DRIVE GATE (CHAIN-LINK) EA	WALK GATE (CHAIN-LINK) EA
8	711+62.11	712+04.63	I-270	WALL A9498	43				
8	712+78.62	713+30.47	I-270	WALL A9498	52				
8	711+59.70	712+23.77	I-270	WALL A9501	64				
8	712+99.55	713+65.73	I-270	WALL A9501	66				
10	735+56.00	737+37.00	I-270	RT		167		1	
10	737+37.00	739+45.00	I-270	RT			412		1
				SUBTOTAL	225	167	412	1	1
				PAY TOTAL	225	167	412	1	1

CONCRETE CURB RAMP

SHEET NO.	FROM STA	TO STA	ROADWAY	LOCATION	APPROX. CONC. CURB RAMP AREA (FOR INFO ONLY) SY	CONCRETE CURB RAMP EA	TRUNCATED DOMES SF	NOTES
11	10+25.56	10+50.42	LILAC AVE	LT	14.6	1	18	LARGE RADIUS PERPENDICULAR
11	11+14.99	11+41.41	LILAC AVE	LT	14.6	1	22	LARGE RADIUS PERPENDICULAR
11	11+32.93	11+60.46	LILAC AVE	RT	21.4	1	25	BLENDED TRANSITION
11	12+67.40	12+93.53	LILAC AVE	LT	14.5	1	22	LARGE RADIUS PERPENDICULAR
11	12+79.59	13+07.69	LILAC AVE	RT	15.3	1	25	LARGE RADIUS PERPENDICULAR
11	13+49.17	13+76.07	LILAC AVE	LT	16.9	1	24	LARGE RADIUS PERPENDICULAR
11	13+64.37	13+88.43	LILAC AVE	RT	14.7	1	18	LARGE RADIUS PERPENDICULAR
11	14+46.81	14+53.90	LILAC AVE	LT	4.7	1		GRADE TRANSITION SECTION
11	14+58.19	14+65.20	LILAC AVE	RT	4.7	1		GRADE TRANSITION SECTION
11	16+33.35	16+40.35	LILAC AVE	LT	4.7	1		GRADE TRANSITION SECTION
11	16+44.73	16+51.73	LILAC AVE	RT	4.7	1		GRADE TRANSITION SECTION
11	17+00.96	17+23.83	LILAC AVE	LT	13.9	1	15	LARGE RADIUS PERPENDICULAR
11	17+18.51	17+43.54	LILAC AVE	RT	16.1	1	21	LARGE RADIUS PERPENDICULAR
11	17+87.91	18+17.90	LILAC AVE	LT	16.1	1	28	LARGE RADIUS PERPENDICULAR
11	17+94.87	18+22.10	LILAC AVE	RT	15.0	1	24	LARGE RADIUS PERPENDICULAR
11	19+66.55	19+95.87	LILAC AVE	LT	15.7	1	27	LARGE RADIUS PERPENDICULAR
11	19+82.42	20+07.84	LILAC AVE	RT	14.3	1	21	LARGE RADIUS PERPENDICULAR
11	20+68.78	20+96.36	LILAC AVE	RT	15.3	1	24	LARGE RADIUS PERPENDICULAR
11	20+71.23	20+96.54	LILAC AVE	LT	14.3	1	21	LARGE RADIUS PERPENDICULAR
11	21+77.26	21+98.35	LILAC AVE	LT	12.7	1	15	LARGE RADIUS PERPENDICULAR
11	21+83.79	22+06.80	LILAC AVE	RT	13.1	1	16	LARGE RADIUS PERPENDICULAR
11	22+37.24	22+48.39	LILAC AVE	LT	7.0	1	12	SMALL RADIUS PERPENDICULAR
11	22+48.39	22+59.61	LILAC AVE	LT	7.1	1	12	SMALL RADIUS PERPENDICULAR
				SUBTOTAL	291.4	23	390	
				PAY TOTAL		23	390	

SLOPE PROTECTION

SHEET NO.	FROM STA	TO STA	ROADWAY	LOCATION	AREA FYI	SLOPE PROTECTION SY	REMARKS
8	711+99	712+84	I-270	RT	506.3	56	
8	712+18	713+05	I-270	LT	518.1	58	
					SUBTOTAL	114	
					PAY TOTAL	114	

SIDEWALK

SHEET NO.	FROM STA	TO STA	ROADWAY	LOCATION	CONCRETE SIDEWALK, 4 IN. SY	TYPE 5 AGGREGATE FOR BASE (4 IN. THICK) SY	REMARKS
11	10+05.10	10+25.56	LILAC AVE	LT	13.6	14	
11	11+41.41	12+67.40	LILAC AVE	LT	84.0	84	
11	11+60.46	12+79.59	LILAC AVE	RT	79.4	79	
11	13+76.07	14+46.81	LILAC AVE	LT	51.1	51	6.5' WIDTH
11	13+88.43	14+58.19	LILAC AVE	RT	50.4	50	6.5' WIDTH
11	16+40.35	17+00.96	LILAC AVE	LT	43.8	44	6.5' WIDTH
11	16+51.73	17+18.51	LILAC AVE	RT	48.2	48	6.5' WIDTH
11	18+17.90	19+66.55	LILAC AVE	LT	99.1	99	
11	18+22.10	19+82.42	LILAC AVE	RT	106.9	107	
11	20+96.36	21+83.79	LILAC AVE	RT	58.3	58	
11	20+96.54	21+77.26	LILAC AVE	LT	53.8	54	
				SUBTOTAL	688.6	688	
				PAY TOTAL	688.6	688	

SUMMARY OF QUANTITIES
SHEET 11 OF 18

STATE OF MISSOURI
EUGENE LOUIS KUEKER JR.
NUMBER PE-2011000912
PROFESSIONAL ENGINEER

THIS SHEET HAS BEEN SIGNED, SEALED, AND DATED ELECTRONICALLY.

DATE PREPARED 3/25/2026
ROUTE I-270 | STATE MO
DISTRICT SL | SHEET NO. 3
COUNTY ST. LOUIS
JOB NO. J6I3020D
CONTRACT ID.
PROJECT NO.
BRIDGE NO.

DESCRIPTION | DATE

MISSOURI HIGHWAYS AND TRANSPORTATION COMMISSION
105 WEST CAPITOL
JEFFERSON CITY, MO 65102
1-888-ASK-MODOT (1-888-275-6636)

HDR Engineering, Inc.
1001 Highlands Plaza Drive
Suite 200
St. Louis, MO 63110-1337
314-425-8300
Certificate of Authority: 000856

IF A SEAL IS PRESENT ON THIS SHEET IT HAS BEEN ELECTRONICALLY SEALED AND DATED.

LIGHTING CONDUIT

SHEET NO.	FROM	TO	LOCATION	CIRCUIT	CENTER TO CENTER DISTANCE LF	CONDUIT, 4 IN. RIGID IN TRENCH LF	CONDUIT, 3 IN. RIGID, PUSHED LF	CABLE-CONDUIT, 1 IN., 2 CONDUCTORS AND 1 BARE NEUTRAL, 6 AWG LF	CABLE, 6 AWG 1 CONDUCTOR LF	TRENCHING TYPE I LF	REMARKS
102	PULL BOX 11	LUMINAIRE A1-3	EX RAMP 1	A1	157			165		157	
102	LUMINAIRE A1-3	LUMINAIRE A1-4	EX RAMP 1	A1	202			212		202	
102	PULL BOX 11	PULL BOX 12	EX RAMP 1	A1	152		150	158			CABLE-CONDUIT IN RIGID CONDUIT
102	PULL BOX 12	LUMINAIRE A1-5	EX RAMP 2	A1	63			71		63	
102	PULL BOX 12	LUMINAIRE A1-6	EX RAMP 2	A1	160			168		160	
104	LUMINAIRE A2-4	LUMINAIRE A2-5	EX RAMP 3	A2	220			230		220	
104	LUMINAIRE A2-5	PULL BOX 13	EX RAMP 3	A2	63			71		63	
104	PULL BOX 13	PULL BOX 14	EX RAMP 3	A2	138		136	144			CABLE-CONDUIT IN RIGID CONDUIT
104	PULL BOX 14	LUMINAIRE A2-6	EX RAMP 4	A2	41			49		41	
104	PULL BOX 14	LUMINAIRE A2-7	EX RAMP 4	A2	172			180		172	
104	LUMINAIRE A2-7	LUMINAIRE A2-8	EX RAMP 4	A2	212			222		212	
105	LIGHTING CONTROLLER A	PULL BOX 1	LILAC AVE	A1, A2	31	34		84		31	2 CIRCUITS IN 4" RIGID CONDUIT
105	PULL BOX 1	LUMINAIRE A1-1	LILAC AVE	A1	13			21		13	
105	PULL BOX 1	PULL BOX 2	LILAC AVE	A1, A2	57		55	126			2 CIRCUITS IN 4" RIGID CONDUIT
105	PULL BOX 2	LUMINAIRE A1-2	LILAC AVE	A1	138			146		138	
105	LUMINAIRE A1-2	PULL BOX 4	LILAC AVE	A1	37			45		37	
105	PULL BOX 4	PULL BOX 13	LILAC AVE	A1	870			876		870	
105	PULL BOX 4	PULL BOX 6	LILAC AVE	A1	65		63	71			CABLE-CONDUIT IN RIGID CONDUIT
105	PULL BOX 6	METALLIC JB ON BRIDGE	LILAC AVE	A1	108			114		108	
105	METALLIC JB ON BRIDGE	ORNAMENTAL LUMINAIRE A1-7	LILAC AVE	A1	19				72		IN 2" PVC CONDUIT (BRIDGE MOUNTED)
105	ORNAMENTAL LUMINAIRE A1-7	ORNAMENTAL LUMINAIRE A1-8	LILAC AVE	A1	32				108		IN 2" PVC CONDUIT (BRIDGE MOUNTED)
105	ORNAMENTAL LUMINAIRE A1-8	ORNAMENTAL LUMINAIRE A1-9	LILAC AVE	A1	32				108		IN 2" PVC CONDUIT (BRIDGE MOUNTED)
105	ORNAMENTAL LUMINAIRE A1-9	ORNAMENTAL LUMINAIRE A1-10	LILAC AVE	A1	32				108		IN 2" PVC CONDUIT (BRIDGE MOUNTED)
105	ORNAMENTAL LUMINAIRE A1-10	ORNAMENTAL LUMINAIRE A1-11	LILAC AVE	A1	32				108		IN 2" PVC CONDUIT (BRIDGE MOUNTED)
105	PULL BOX 2	PULL BOX 3	LILAC AVE	A2	103		101	109			CABLE-CONDUIT IN RIGID CONDUIT
105	PULL BOX 3	LUMINAIRE A2-1	LILAC AVE	A2	29			37		29	
105	LUMINAIRE A2-1	PULL BOX 5	LILAC AVE	A2	147			155		147	
105	PULL BOX 5	LUMINAIRE A2-2	LILAC AVE	A2	20			28		20	
105	LUMINAIRE A2-2	LUMINAIRE A2-4	LILAC AVE	A2	856			866		856	
105	PULL BOX 5	PULL BOX 7	LILAC AVE	A2	64		62	70			CABLE-CONDUIT IN RIGID CONDUIT
105	PULL BOX 7	LUMINAIRE A2-3	LILAC AVE	A2	40			48		40	
105	LUMINAIRE A2-3	METALLIC JB ON BRIDGE	LILAC AVE	A2	74			82		74	
105	METALLIC JB ON BRIDGE	ORNAMENTAL LUMINAIRE A2-9	LILAC AVE	A2	18				69		IN 2" PVC CONDUIT (BRIDGE MOUNTED)
105	ORNAMENTAL LUMINAIRE A2-9	ORNAMENTAL LUMINAIRE A2-10	LILAC AVE	A2	32				108		IN 2" PVC CONDUIT (BRIDGE MOUNTED)
105	ORNAMENTAL LUMINAIRE A2-10	ORNAMENTAL LUMINAIRE A2-11	LILAC AVE	A2	32				108		IN 2" PVC CONDUIT (BRIDGE MOUNTED)
105	ORNAMENTAL LUMINAIRE A2-11	ORNAMENTAL LUMINAIRE A2-12	LILAC AVE	A2	32				108		IN 2" PVC CONDUIT (BRIDGE MOUNTED)
105	ORNAMENTAL LUMINAIRE A2-12	ORNAMENTAL LUMINAIRE A2-13	LILAC AVE	A2	32				108		IN 2" PVC CONDUIT (BRIDGE MOUNTED)
105	EX CONTROLLER B	EX PULL BOX	LILAC AVE	B1	271		274	282			CABLE-CONDUIT IN RIGID CONDUIT
105	EX PULL BOX	EX PULL BOX	LILAC AVE	B1	95		93	101			CABLE-CONDUIT IN RIGID CONDUIT
105	EX PULL BOX	EX PULL BOX	LILAC AVE	B1	67		65	73			CABLE-CONDUIT IN RIGID CONDUIT
105	EX PULL BOX	LUMINAIRE B1	LILAC AVE	B1	35			43		35	
105	EX PULL BOX	LUMINAIRE B2	LILAC AVE	B1	28			36		28	
105	LUMINAIRE B2	LUMINAIRE B3	LILAC AVE	B1	137			147		137	
105	LUMINAIRE B3	PULL BOX 10	LILAC AVE	B1	12			20		12	
105	PULL BOX 10	PULL BOX 9	LILAC AVE	B1	94		92	100			CABLE-CONDUIT IN RIGID CONDUIT
105	PULL BOX 9	LUMINAIRE B4	LILAC AVE	B1	50			58		50	
105	PULL BOX 9	PULL BOX 8	LILAC AVE	B1	74		72	80			CABLE-CONDUIT IN RIGID CONDUIT
105	PULL BOX 8	LUMINAIRE B5	LILAC AVE	B1	29			37		29	
				SUBTOTAL		34	1,163	5,525	1,005	3,944	
				PLUS 5% FOR SNAKING		2	58	276	50		
				TOTAL		36	1,221	5,801	1,055	3,944	
				PAY TOTAL		36	1,221	5,810	1,060	3,944	

MISCELLANEOUS TRAFFIC SIGNALS

ITEM NO.	DESCRIPTION	UNIT	QUANTITY	REMARKS
9029400	TEMPORARY TRAFFIC SIGNALS	LS	1	SEE JSPs
9029901	MISC., TRAFFIC SIGNAL MAINTENANCE & PROGRAMMING	LS	1	SEE JSPs
9029902	MISC., TEMPORARY GENERATOR FOR SIGNAL POWER	EA	2	SEE JSPs
9029902	MISC., AUDIBLE PEDESTRIAN PUSHBUTTONS AND SIGNING	EA	12	SEE JSPs AND SIGNAL SHEETS
9029902	MISC., ATC TRAFFIC SIGNAL CONTROLLER	EA	2	SEE JSPs AND SIGNAL SHEETS
9029902	MISC., COUNTDOWN PEDESTRIAN SIGNAL HEAD, TYPE 1S	EA	12	SEE JSPs AND SIGNAL SHEETS
9029902	MISC., NETWORK CONNECTED SIGNAL MONITOR	EA	2	SEE JSPs
9029902	MISC., PAD MNT 120V/240V SIGNAL PS & LIGHTING CONTROLLER W/UPS	EA	1	SEE JSPs AND SIGNAL SHEETS
9029903	MISC., CAT-5E/CAT-6 ETHERNET CABLE	LF	180	SEE JSPs AND SIGNAL SHEETS
9109902	MISC., INSTALL CCTV CAMERA ASSEMBLY	EA	2 *	SEE JSPs AND SIGNAL SHEETS

* PAY TOTAL INCLUDES QUANTITY FROM SHEET 15 OF 18.

SUMMARY OF QUANTITIES
SHEET 12 OF 18

STATE OF MISSOURI
JASON LEE HAYNES
NUMBER PE-2004017183
PROFESSIONAL ENGINEER
THIS SHEET HAS BEEN SIGNED, SEALED, AND DATED ELECTRONICALLY

DATE PREPARED 3/25/2026
ROUTE I-270 | STATE MO
DISTRICT SL | SHEET NO. 3
COUNTY ST. LOUIS
JOB NO. J6I3020D
CONTRACT ID.
PROJECT NO.
BRIDGE NO.

DESCRIPTION | DATE

IF A SEAL IS PRESENT ON THIS SHEET IT HAS BEEN ELECTRONICALLY SEALED AND DATED.

MISSOURI HIGHWAYS AND TRANSPORTATION COMMISSION
105 WEST CAPITOL
JEFFERSON CITY, MO 65102
1-888-ASK-MODOT (1-888-275-6636)

HDR Engineering, Inc.
1001 Highlands Plaza Drive
Suite 200
St. Louis, MO 63110-1337
314-425-8300
Certificate of Authority: 000856

TOP-MOUNT LIGHT POLES AND LUMINAIRES

SHEET NO.	ROADWAY	STATION	LOCATION	170W TOP MOUNTED LED-B LUMINAIRE TYPE 2 EA	170W TOP MOUNTED LED-B LUMINAIRE TYPE 3 EA	ORNAMENTAL LUMINAIRE (BRIDGE MOUNTED) EA	45 FT TOP MOUNT LIGHT POLE EA	POLE FOUNDATION (45 FT. OR 13.5 M) MOUNTING HEIGHT EA	SHAFT LENGTH FOR INFO ONLY	CABLE, 10 AWG 1 CONDUCTOR, POLE AND BRACKET LF	REMARKS
102	EX RAMP 1	10+62.47	8.16' RT	1			1	1	40	120	A1-3
102	EX RAMP 1	12+62.60	6.72' RT	1			1	1	40	120	A1-4
102	EX RAMP 2	4+16.89	13.65' RT	1			1	1	40	120	A1-5
102	EX RAMP 2	6+37.01	10.58' RT	1			1	1	40	120	A1-6
104	EX RAMP 3	5+00.27	11.71' RT	1			1	1	40	120	A2-4
104	EX RAMP 3	2+80.66	23.02' RT	1			1	1	40	120	A2-5
104	EX RAMP 4	13+32.38	20.08' RT	1			1	1	40	120	A2-6
104	EX RAMP 4	11+22.71	18.64' RT	1			1	1	40	120	A2-7
104	EX RAMP 4	9+12.72	17.82' RT	1			1	1	40	120	A2-8
105	LILAC AVE	10+78.07	79.53' RT	1			1	1	40	120	A1-1
105	LILAC AVE	12+64.31	43.47' RT		1		1	1	40	120	A1-2
105	LILAC AVE	14+92.40	37' RT			1				30	A1-7
105	LILAC AVE	15+24.40	37' RT			1				30	A1-8
105	LILAC AVE	15+56.40	37' RT			1				30	A1-9
105	LILAC AVE	15+88.40	37' RT			1				30	A1-10
105	LILAC AVE	16+20.40	37' RT			1				30	A1-11
105	LILAC AVE	11+46.79	43.68' LT		1		1	1	40	120	A2-1
105	EX RAMP 3	13+54.72	15.41' RT	1			1	1	40	120	A2-2
105	LILAC AVE	13+88.53	40.00' LT		1		1	1	40	120	A2-3
105	LILAC AVE	14+80.00	37' LT			1				30	A2-9
105	LILAC AVE	15+12.00	37' LT			1				30	A2-10
105	LILAC AVE	15+44.00	37' LT			1				30	A2-11
105	LILAC AVE	15+76.00	37' LT			1				30	A2-12
105	LILAC AVE	16+08.00	37' LT			1				30	A2-13
105	LILAC AVE	17+13.24	40.00' RT		1		1	1	40	120	B5
105	EX RAMP 2	12+85.52	10.25' RT	1			1	1	40	120	B4
105	LILAC AVE	18+22.85	43.91' LT		1		1	1	40	120	B3
105	LILAC AVE	19+57.81	40.61' LT		1		1	1	40	120	B2
105	LILAC AVE	21+02.36	43.47' RT		1		1	1	40	120	B1
			SUBTOTAL	12	7	10	19	19		2,580	
			PAY TOTAL	19		10	19	19		2,580	

LIGHTING PULLBOXES

SHEET NO.	ROADWAY	STATION	LOCATION	PULL BOX NO.	PULL BOX, PREFORMED CLASS 1 EA	PULL BOX, PREFORMED CLASS 3 EA	REMARKS
102	EX RAMP 1	9+05.88	8.64' RT	11	1		PB11
102	EX RAMP 2	4+78.37	10.98' RT	12	1		PB12
104	EX RAMP 3	2+19.27	25.25' RT	13	1		PB13
104	EX RAMP 4	12+93.21	19.56' RT	14	1		PB14
105	LILAC AVE	10+74.71	67.43' RT	1		1	PB1
105	LILAC AVE	11+30.02	54.49' RT	2	1		PB2
105	LILAC AVE	11+19.72	46.27' LT	3	1		PB3
105	LILAC AVE	13+01.53	42.82' RT	4	1		PB4
105	LILAC AVE	12+90.36	54.91' LT	5	1		PB5
105	LILAC AVE	13+66.03	46.15' RT	6	1		PB6
105	LILAC AVE	13+54.96	51.72' LT	7	1		PB7
105	LILAC AVE	17+40.56	40.60' RT	8	1		PB8
105	LILAC AVE	18+11.87	48.20' RT	9	1		PB9
105	LILAC AVE	18+12.22	44.17' LT	10	1		PB10
				SUBTOTAL	13	1	
				PAY TOTAL	13	1	

SUMMARY OF QUANTITIES
SHEET 13 OF 18

STATE OF MISSOURI
JASON LEE HAYNES
NUMBER PE-2004017183
PROFESSIONAL ENGINEER

THIS SHEET HAS BEEN SIGNED, SEALED, AND DATED ELECTRONICALLY

DATE PREPARED
3/25/2026

ROUTE	STATE
I-270	MO

DISTRICT	SHEET NO.
SL	3

COUNTY
ST. LOUIS

JOB NO.
J6I3020D

CONTRACT ID.

PROJECT NO.

BRIDGE NO.

DATE	DESCRIPTION

IF A SEAL IS PRESENT ON THIS SHEET IT HAS BEEN ELECTRONICALLY SEALED AND DATED.

MISSOURI HIGHWAYS AND TRANSPORTATION COMMISSION
105 WEST CAPITOL
JEFFERSON CITY, MO 65102
1-888-ASK-MODOT (1-888-275-6636)

HDR Engineering, Inc.
1001 Highlands Plaza Drive
Suite 200
St. Louis, MO 63110-1337
314-425-8300
Certificate of Authority: 000856

ITS EQUIPMENT

SHEET NO.	ROADWAY	STATION	LOCATION	STLCO PULL BOX PERFORMED CLASS 2 EA	ITS PULL BOX WITH CONCRETE PAD, PREFORMED CLASS 5 EA	MODOT BURIED CABLE DRIVEABLE POST EA	CONDUIT 3" RIGID, IN TRENCH LF	INTERCEPT CONDUIT WITH PULL BOX EA	NOTES
87	LILAC AVE	13+16	70' RT			1			EX. PULL BO NO. 1
87	LILAC AVE	12+85	63' RT		1	1			PULL BOX NO. 2
87	LILAC AVE	12+85	93' LT		1	1			PULL BOX NO. 3
87	RAMP 4	1+90	22' RT		1	1			PULL BOX NO. 4
87	RAMP 4	0+70	20' RT			1		1	EX. PULL BOX NO. 5
87	LILAC AVE	21+64	40' LT	1	1	1		1	PULL BOX NO. 6
87	LILAC AVE	18+00	65' LT				5		SIGNAL CABINET
87	LILAC AVE	12+71	54' LT				5		SIGNAL CABINET
			SUBTOTAL	1	4	6	10	2	
	BACKBONE REPLACEMENT SUBTOTAL					27			
			PAY TOTAL	1	4	33	10	2	

ITS CONDUIT AND CABLE

SHEET NO.	FROM	TO	CENTER TO CENTER DISTANCE	CONDUIT (FT) HDPE (FT) BORE 2"	CONDUIT (FT) HDPE (FT) TRENCHED 2"	CABLE 24 SM FIBER	REMARKS
87	EX. PB 1	PB 2	37'	9	27	47	
87	PB 2	PB 3	156'	111	44	166	
87	PB 3	CONTROLLER	45'		44	55	
87	PB 3	CONTROLLER	50'		49	60	TEMP. CONNECTION
87	PB 3	PB 4	451'	450		461	
87	PB 4	EX. PB 5	115'		114	125	
87	EX. PB 5	CONTROLLER	30'		34	EXIST.	
87	EX. PB 5	PB 6	387'	81	304	EXIST.	
		SUBTOTAL		651	616	914	
	BACKBONE REPLACEMENT SUBTOTAL					16972	
		PAY TOTAL		651	616	17886	

ITS ASSET MANAGEMENT TOOL

SHEET NO.	ITS ASSET MANAGEMENT TOOL (LS)	REMARKS
-	1	
SUBTOTAL	1.0	
PAY TOTAL	1.0	

SUMMARY OF QUANTITIES
SHEET 14 OF 18

STATE OF MISSOURI
TAYLOR C. McHENRY
NUMBER PE-2020006619
PROFESSIONAL ENGINEER

THIS SHEET HAS BEEN SIGNED, SEALED, AND DATED ELECTRONICALLY.

DATE PREPARED 3/25/2026

ROUTE I-270 | STATE MO

DISTRICT SL | SHEET NO. 3

COUNTY ST. LOUIS

JOB NO. J6I3020D

CONTRACT ID.

PROJECT NO.

BRIDGE NO.

DESCRIPTION	DATE

IF A SEAL IS PRESENT ON THIS SHEET IT HAS BEEN ELECTRONICALLY SEALED AND DATED.

MISSOURI HIGHWAYS AND TRANSPORTATION COMMISSION

105 WEST CAPITOL
JEFFERSON CITY, MO 65102
1-888-ASK-MODOT (1-888-275-6636)

HDR Engineering, Inc.
1001 Highlands Plaza Drive
Suite 200
St. Louis, MO 63110-1337
314-425-8300
Certificate of Authority: 000856

FIBER RELATED QUANTITIES

LOCATION	DEVICE ID	WALL-MOUNTED FIBER INTERCONNECT CENTER (EA)	SM FIBER OPTIC PIGTAIL (EA)	SM FIBER OPTIC JUMPER (EA)	MM FIBER OPTIC PIGTAIL (EA)	MM FIBER OPTIC JUMPER (EA)	FUSION SPLICE (EA)	INSTALL CCTV CAMERA ASSEMBLY (EA)	INSTALL OR RELOCATE EXISTING COMMUNICATION EQUIPMENT (EA)	IN-GROUND SPLICE CLOSURE (EA)	REMOVAL OF EXISTING FIBER CABLE (LF)	MODOT BURIED CABLE DRIVEABLE POST (EA)	24F SINGLE MODE FIBER OPTIC CABLE (LF)
I-270 AT RTE 367	NODE 25	0	0	8	0	0	0	0	1	0	0	0	0
DMS W/O BELLEFONTAINE	IS270W032.5	0	2	0	0	0	24	0	0	0	0	0	0
BELLEFONTAINE EB RAMP	IS270E033.1	0	2	0	0	0	26	0	0	0	0	0	0
CAMERA W/O LILAC	IPB-301	0	0	0	0	0	4	0	0	1	0	0	0
LILAC WB RAMP	IS270W034.1	1	8	4	0	0	56	0	1	0	0	0	0
LILAC EB RAMP	IS270E034.1	1	8	4	2	2	10	1	1	0	0	0	0
DETECTOR W/O RIVERVIEW	IS270W034.4	0	2	0	0	0	20	0	0	0	0	0	0
W/O RIVERVIEW	IPB-308	0	0	0	0	0	22	0	0	0	0	0	0
BACKBONE REPLACEMENT	-	0	0	0	0	0	0	0	0	0	16972	27	16972
	SUB TOTAL	2	22	16	2	2	162	1	3	1	16972	27	16972
	PAY TOTAL	2	22	16	2	2	162	1	3	1	16980	*	*

* SEE SUMMARY OF QUANTITIES SHEET 14 OF 18 FOR PAY TOTAL.

SUMMARY OF QUANTITIES

SHEET 15 OF 18

STATE OF MISSOURI
CHARLES A. MILLER
NUMBER E-2002000606
REGISTERED PROFESSIONAL ENGINEER

3/23/2026

DATE PREPARED
3/22/2026

ROUTE	STATE
I-270	MO
DISTRICT	SHEET NO.
SL	3

COUNTY
ST. LOUIS

JOB NO.
J613020D

CONTRACT ID.

PROJECT NO.
-

BRIDGE NO.

DESCRIPTION	DATE

MISSOURI HIGHWAYS AND TRANSPORTATION COMMISSION

105 WEST CAPITOL
JEFFERSON CITY, MO 65102
1-888-ASK-MODOT (1-888-275-6636)

HNTB
715 KIRK DRIVE
KANSAS CITY, MO 64105-1310
CERTIFICATE OF AUTHORITY
NO. 001270

J613020D_Comm_Quantities.dgn 11:56:17 AM 3/22/2026

DRAINAGE STRUCTURES

STRUCTURE ID	TO STRUCTURE ID	ROAD	STATION	OFFSET	GROUP A PIPE			PRECAST CONCRETE DROP INLETS				PRECAST CONCRETE MANHOLES			MANHOLE FRAME & COVER				CURVED VANE GRATE & FRAME		GRATE & BEARING PLATES			FLARED END SECTION			GUTTER SCUPPER (EACH)	TEE CONNECTION (EACH)	PIPE COLLAR TYPE A (EACH)	SHALLOW GRATE INLET (EACH)	CLASS 3 EXCAVATION	ROCK LINING	PIPEOPENINGS
					12" (FT)	18" (FT)	24" (FT)	2' X 2' (FT)	3' X 3' (FT)	4' X 2' (FT)	5' X 3' (FT)	4' (FT)	5' (FT)	6' (FT)	TYPE 1-A (EACH)	TYPE 1-B (EACH)	TYPE 2 2 (EACH)	TYPE 4 4 (EACH)	2' X 2' (EACH)	4' X 2' (EACH)	3' X 2' (EACH)	3' X 3' (EACH)	5' X 3' (EACH)	12" (EACH)	18" (EACH)	24" (EACH)					(CY)	(CY)	
704B1	706B1	I-270	704+20.60	3.25' RT		192				4.8										1											196.4		1-18"
706B1	707B1	I-270	706+12.08	3.25' RT		188				3.8										1											164.0		2-18"
707B1		I-270	707+99.90	3.25' RT						4.8										1											8.4		1-18", 1-24"
708S1		I-270	708+82.99	81.01' RT					3.5													1									8.7		1-18"
707S2	707P1	I-270	707+99.74	89.18' LT			7		4.9													1									61.9		2-24"
708P1		I-270	708+00.54	82.44' LT																									1				
710B1	712B1	I-270	710+63.94	3.25' RT		141				2.8										1											88.0		1-18"
712B1	713B1	I-270	712+03.89	3.25' RT		144				2.8										1											138.7		2-18"
713B1	715B2	I-270	713+47.11	3.25' RT		244				3.1										1											168.0		2-18"
715B1	715B2	I-270	715+90.92	3.25' LT		7				3.1										1											6.2		1-18"
715B2	718B2	I-270	715+90.92	3.25' RT		220				3.2										1											160.4		3-18"
718B1	718B2	I-270	718+10.45	3.25' LT		7				4.4										1											7.9		1-18"
718S2	718P1	I-270	718+08.72	64.40' RT		7			2.3													1									7.0		1-18"
718P1		I-270	718+08.72	57.40' RT																									1		5.4		1-18"
718B2	720B2	I-270	718+10.45	3.25' RT			281			4.5										1											303.6		3-18", 1-24"
720B1	720B2	I-270	720+90.93	3.25' LT		7				5.0										1											9.6		1-18"
720B2	721R3	I-270	720+90.93	3.25' RT			79			5.1										1											92.5		1-18", 2-24"
721R3		I-270	721+69.28	2.07' RT																								1					
718S1	720S1	I-270	718+09.74	149.24' LT		232			4.5													1									239.9		1-18"
720S1	721R1	I-270	720+36.76	105.55' LT			83		3.5													1									80.7		1-18", 1-24"
721R1		I-270	721+16.20	98.34' LT																								1					
722S1	721R2	I-270	722+39.67	74.90' LT		123			3.0													1									103.5		1-18"
721R2		I-270	721+21.65	97.57' LT																								1					
723B1	723B2	I-270	723+40.93	3.25' LT		7				2.7										1											5.9		1-18"
723B2	725B2	I-270	723+40.93	3.25' RT		250				2.8										1											153.0		2-18"
725B1	725B2	I-270	725+90.92	3.25' LT		7				2.7										1											6.3		1-18"
725B2	728B2	I-270	725+90.92	3.25' RT		250				2.8										1											181.7		3-18"
726J1	726B1	I-270	726+00.00	66.33' LT																							1						1-12"
726B1	727B1	I-270	726+00.00	61.25' LT		200				2.8										1											150.0		1-12", 1-18"
728J1	727B1	I-270	728+00.14	60.11' LT																							1						1-12"
727B1	730B1	I-270	727+99.90	55.03' LT		200				2.8										1											190.8		1-12", 2-18"
728B1	728B2	I-270	728+40.92	3.25' LT		7				2.7										1											7.0		1-18"
728B2	730B3	I-270	728+40.92	3.25' RT		250				2.8										1											170.5		3-18"
730J1	730B1	I-270	730+00.00	56.33' LT																							1						1-12"
730B1	732M1	I-270	730+00.00	51.25' LT		200				2.8										1											187.0		1-12", 2-18"
730B2	730B3	I-270	730+90.93	3.25' LT		7				2.6										1											5.5		1-18"
730B3	733B2	I-270	730+90.93	3.25' RT		250				2.7										1											144.7		3-18"
732M1	732F1	I-270	732+00.00	51.25' LT			18					4			1																24.4		2-18"
732F1		I-270	732+06.45	64.67' LT																						1						3.0	
733B1	733B2	I-270	733+40.93	3.25' LT		7				2.7										1											5.6		1-18"
733B2	734B1_EX	I-270	733+40.93	3.25' RT		120				2.8										1											70.4		3-18"
734P1	734F1	I-270	734+61.21	79.96' RT		18																							1		6.2		
734F1		I-270	734+61.23	93.07' RT																					1							2.0	
738Q2	738Q1	I-270	738+73.29	202.41' RT	7																												1-12"
738Q1	739F1	I-270	738+78.32	197.34' RT			44				4.0												1								68.5		1-12", 1-24"
739F1		I-270	739+04.74	161.62' RT																						1						3.0	
12N1	12F2	Lilac Ave	12+70.70	33.91' LT	18														1											1	71.4		1-12"
12F2		Lilac Ave	12+74.57	51.71' LT																				1								2.0	
12D2	12F1	Lilac Ave	12+72.06	32.33' RT		77		2.9											1												51.3		1-18"
12F1		Lilac Ave	12+84.86	104.03' RT																					1							2.0	
14A1	14F1	Lilac Ave	14+26.60	29.00' LT		34		2.5											1												24.3		1-18"
14F1		Lilac Ave	14+31.14	58.01' LT																					1							2.0	
14A2	14F2	Lilac Ave	14+26.58	29.00' RT		36		2.5											1												19.2		1-18"
14F2		Lilac Ave	14+36.34	58.63' RT																					1							2.0	
17A1	17F1	Lilac Ave	17+04.36	29.00' LT		57		1.8											1												14.2		1-18"
17F1		Lilac Ave	17+16.41	48.26' LT																					1							2.0	
17D2	17F2	Lilac Ave	17+04.35	29.00' RT		34		2.5											1												21.5		1-18"
17F2		Lilac Ave	17+14.21	57.12' RT																					1							2.0	
19D1	20S1	Lilac Ave	19+61.00	29.53' LT		61		4.6											1												57.4		1-18"
20S1	20F2	Lilac Ave	20+02.24	73.45' LT		80			3.5													1									105.6		2-18"
20F2		Lilac Ave	20+77.39	67.49' LT																					1							2.0	
19D2	20F1	Lilac Ave	19+61.01	36.11' RT	52			2.9											1												27.3		1-12"
20F1		Lilac Ave	20+03.38	58.21' RT																				1									
21D1	21M1	Lilac Ave	21+71.35	32.17' LT		25		4.4											1												24.8		1-18"
21M1	21S1	Lilac Ave	21+92.50	43.63' LT		19						6			1																25.4		3-18"
21S1		Lilac Ave	21+76.61	53.38' LT					3.5													1									8.3		
21D2	21F2	Lilac Ave	21+71.33	33.20' RT		27		2.9											1												19.3		1-18"
21F2		Lilac Ave	21+80.19	53.84' RT																					1							2.0	
				SUBTOTAL	77	3734	511	27	29	84	4	10	0	0	2	0	0	0	10	25	0	8	1	2	8	2	3	3	3	1	3699	24	
				PAY TOTAL	77	3734	511	27	29	84	4	10	0	0	2	0	0	0	10	25	0	8	1	2	8	2	3	3	3	1	3699	24	

STATE OF MISSOURI
DAVID RIECHMANN
NUMBER PE-2011000948
PROFESSIONAL ENGINEER

DATE PREPARED 3/26/2026
ROUTE I-270 STATE MO
DISTRICT SL SHEET NO. 3
COUNTY ST. LOUIS
JOB NO. J6I3020D
CONTRACT ID.
PROJECT NO.
BRIDGE NO.

DESCRIPTION
DATE

MISSOURI HIGHWAYS AND TRANSPORTATION COMMISSION
105 WEST CAPITOL
JEFFERSON CITY, MO 65102
1-888-ASK-MODOT (1-888-275-6636)

HORNER SHIFRIN
401 S. 18TH ST., STE. 400 ST. LOUIS, MO 63103
314-531-4321 - FAX 314-531-6966
WWW.HORNERSHIFRIN.COM
DISCIPLINE: PROFESSIONAL ENGINEERING
CERTIFICATE OF AUTHORITY: 000159
EXPIRATION DATE: DECEMBER 31, 2026

IF A SEAL IS PRESENT ON THIS SHEET IT HAS BEEN ELECTRONICALLY SEALED AND DATED.

DRAINAGE STRUCTURES
QUANTITIES
SHEET 16 OF 18

TEMPORARY CONCRETE TRAFFIC BARRIER, IMPACT ATTENUATORS, AND CRASH CUSHIONS

PHASE	SHEET NO.	ROADWAY	OFFSET	TEMPORARY TRAFFIC BARRIER CONTRACTOR FURNISHED/ RETAINED	TEMPORARY TRAFFIC BARRIER ANCHORED CONTRACTOR FURNISHED/ RETAINED	TEMPORARY TRAFFIC BARRIER STIFFNESS TRANSITION SECTION CONTRACTOR FURNISHED/ RETAINED	60 MPH IMPACT ATTENUATOR	REPLACEMENT SAND BARREL	IMPACT ATTENUATOR RELOCATION
				LF	LF	LF	EA	EA	EA
1	3-4	I-270	RT	212.5	387.5	212.5	1	14	
2	2	I-270	RT		600			14	1
3	4-6	I-270	RT		3287.5				
3	4-6	I-270	LT		3287.5				
			SUBTOTAL	212.5	7562.5	212.5	1	28	1
			PAY TOTAL	213	7563	213	1	30	1

COVER EXISTING OVERHEAD SIGN

PHASE	SHEET NO.	ROADWAY	OFFSET	COVER EXISTING OVERHEAD SIGN
				EA
1	2	I-270	RT	1
1	4	I-270	RT	1
			SUBTOTAL	2
			PAY TOTAL	2

TEMPORARY TRAFFIC CONTROL PAVEMENT MARKING

PHASE	ROADWAY	TEMPORARY MARKING PAINT				PAVEMENT MARKING REMOVAL
		4 IN., WHITE			4 IN., YELLOW	
		SOLID	INTERMITTENT	DOTTED	SOLID	
		LF	LF	LF	LF	LF
1	I-270	1923		292	2419	4415
2	I-270	4448		245	906	5415
3	I-270	10380	10190	2080	8900	22348
SUBTOTALS		16751	10190	2617	12225	32178
TOTAL		19953			12225	32178

SUMMARY OF QUANTITIES
SHEET 17 OF 18

STATE OF MISSOURI
JONATHAN R. LOOS
NUMBER
PE 2017000326
PROFESSIONAL ENGINEER

DATE PREPARED 3/26/2026
ROUTE I-270 STATE MO
DISTRICT STL SHEET NO. 3
COUNTY ST. LOUIS
JOB NO. J6I3020D
CONTRACT ID. .
PROJECT NO. .
BRIDGE NO. .

DESCRIPTION
DATE

MISSOURI HIGHWAYS AND TRANSPORTATION COMMISSION
MoDOT
105 WEST CAPITOL
JEFFERSON CITY, MO 65102
1-888-ASK-MODOT (1-888-275-6636)

HORNER SHIFRIN
401 S. 18TH ST., STE. 400 ST. LOUIS, MO 63103
314-531-4321 - FAX 314-531-6966
WWW.HORNERSHIFRIN.COM
DISCIPLINE: PROFESSIONAL ENGINEERING
CERTIFICATE OF AUTHORITY: 000159
EXPIRATION DATE: DECEMBER 31, 2026

IF A SEAL IS PRESENT ON THIS SHEET IT HAS BEEN ELECTRONICALLY SEALED AND DATED.

REV.

...\Traffic Control Schedules 4:20:36 PM 3/26/2026

SIGN	SIZE IN.	AREA SQ.FT.	QTY EACH	TOTAL AREA SQ.FT.	QTY RELOC EACH	TOTAL RELOC SQ.FT.	SIGN NO.	DESCRIPTION
WARNING SIGNS								
WO1-1L	48X48	16.00						TURN (SYMBOL LEFT)
WO1-1R	48X48	16.00						TURN (SYMBOL RIGHT)
WO1-2L	48X48	16.00						CURVE (SYMBOL LEFT)
WO1-2R	48X48	16.00						CURVE (SYMBOL RIGHT)
WO1-3L	48X48	16.00						REVERSE TURN (SYMBOL LEFT)
WO1-3R	48X48	16.00						REVERSE TURN (SYMBOL RIGHT)
WO1-4L	48X48	16.00						REVERSE CURVE (SYMBOL LEFT)
WO1-4R	48X48	16.00	2	32.00			61R	REVERSE CURVE (SYMBOL RIGHT)
WO1-4bL	48X48	16.00	2	32.00			33L	DOUBLE ARROW REVERSE CURVE (SYMBOL LEFT)
WO1-4bR	48X48	16.00	2	32.00			33R	DOUBLE ARROW REVERSE CURVE (SYMBOL RIGHT)
WO1-4cL	48X48	16.00						TRIPLE ARROW REVERSE CURVE (SYMBOL LEFT)
WO1-4cR	48X48	16.00						TRIPLE ARROW REVERSE CURVE (SYMBOL RIGHT)
WO1-6	60X30	12.50						HORIZONTAL ARROW (SYMBOL)
WO1-6a	72X36	18.00						HORIZ. ARROW (SYMBOL ON PERMANENT BARRICADE)
WO1-7	60X30	12.50						DOUBLE HEAD HORIZONTAL ARROW (SYMBOL)
WO1-7a	72X36	18.00						DOUBLE HEAD HORIZ. ARROW (SYMBOL ON PERM. BARR.)
WO1-8	18X24	3.00						CHEVRON (SYMBOL)
WO1-8a	30X36	7.50						CHEVRON (SYMBOL FOR DIVIDED HIGHWAYS)
WO3-1	48X48	16.00						STOP AHEAD (SYMBOL)
WO3-2	48X48	16.00	1	16.00			40	YIELD AHEAD (SYMBOL)
WO3-3	48X48	16.00						SIGNAL AHEAD (SYMBOL)
WO3-4	48X48	16.00						BE PREPARED TO STOP
WO3-5	48X48	16.00	2	32.00			56	SPEED LIMIT AHEAD
WO4-1L	48X48	16.00						MERGE (SYMBOL FROM LEFT)
WO4-1R	48X48	16.00						MERGE (SYMBOL FROM RIGHT)
WO4-2L	48X48	16.00	2	32.00			6A	MERGE (LEFT)
WO4-2R	48X48	16.00	6	96.00			6B	MERGE (RIGHT)
WO5-1	48X48	16.00	2	32.00			43	ROAD/BRIDGE/RAMP NARROWS
WO5-3	48X48	16.00						ONE LANE BRIDGE
WO5-5	48X48	16.00	2	32.00			34	NARROW LANES
WO6-1	48X48	16.00						DIVIDED HIGHWAY (SYMBOL)
WO6-2	48X48	16.00						DIVIDED HIGHWAY END (SYMBOL)
WO6-3	48X48	16.00						TWO WAY TRAFFIC (SYMBOL)
WO7-3a	30X24	5.00	2	10.00			44A	NEXT XX MILES (PLAQUE)
WO8-1	48X48	16.00						BUMP
WO8-2	48X48	16.00						DIP
WO8-3	48X48	16.00						PAVEMENT ENDS
WO8-4	48X48	16.00						SOFT SHOULDER
WO8-5	48X48	16.00						SLIPPERY WHEN WET (SYMBOL)
WO8-6	48X48	16.00						TRUCK CROSSING
WO8-6c	48X48	16.00						TRUCK ENTRANCE
WO8-7	36X36	9.00						LOOSE GRAVEL
WO8-7a	36X36	9.00						FRESH OIL / LOOSE GRAVEL
WO8-9	48X48	16.00						LOW SHOULDER
WO8-11	48X48	16.00						UNEVEN LANES
WO8-12	48X48	16.00						NO CENTER LINE
WO8-15	48X48	16.00						GROOVED PAVEMENT
WO8-15P	30X24	5.00	2	10.00			90A	MOTORCYCLE (PLAQUE)
WO8-17L	48X48	16.00						SHOULDER DROP-OFF (SYMBOL LEFT)
WO8-17R	48X48	16.00						SHOULDER DROP-OFF (SYMBOL RIGHT)
WO8-17P	30X24	5.00						SHOULDER DROP-OFF (PLAQUE)
W10-1	42RND.	9.62						RAILROAD CROSSING
WO12-1	24X24	4.00						DOUBLE DOWN ARROW (SYMBOL)
WO12-2	48X48	16.00						LOW CLEARANCE (SYMBOL)
W012-2x	24X18	3.00						LOW CLEARANCE (PLAQUE)
WO12-2a	84X24	14.00						OVERHEAD LOW CLEARANCE (FEET AND INCHES)
WO12-4	120X60	50.00						LOW CLEARANCE XX FT XX IN XX MILES AHEAD
WO12-5	120X60	50.00						WIDTH RESTRICTION XX FT XX IN XX MILES AHEAD
WO13-1	30X30	6.25						ADVISORY SPEED (PLAQUE)
WO16-2	30X24	5.00						XXX FEET (PLAQUE)
WO16-3	30X24	5.00						X MILE (PLAQUE)
WO20-1	48X48	16.00	15	240.00			2	ROAD/BRIDGE/RAMP WORK AHEAD
WO20-2	48X48	16.00	2	32.00			18	DETOUR AHEAD
WO20-3	48X48	16.00	2	32.00			20	ROAD CLOSED AHEAD
WO20-4	48X48	16.00						ONE LANE ROAD AHEAD
WO20-5	48X48	16.00	8	128.00			5	RIGHT/CENTER/LEFT LANE CLOSED AHEAD
WO20-5a	48X48	16.00						2 RIGHT/CENTER/LEFT LANES CLOSED AHEAD
WO20-6a	48X48	16.00						RIGHT/CENTER/LEFT LANE CLOSED
WO20-7a	48X48	16.00						FLAGGER (SYMBOL)
WO21-2	36X36	9.00						FRESH OIL
WO21-5	48X48	16.00	2	32.00			21	SHOULDER WORK / SHOULDER WORK AHEAD
WO22-1	48X48	16.00						BLASTING ZONE AHEAD
WO22-2	42X36	10.50						TURN OFF 2-WAY RADIO AND PHONE
WO22-3	42X36	10.50						END BLASTING ZONE
W24-1aR	48X48	16.00	2	32.00			62	DOUBLE REVERSE CURVE

SIGN	SIZE IN.	AREA SQ.FT.	QTY EACH	TOTAL SQ.FT.	QTY RELOC EACH	TOTAL RELOC SQ.FT.	SIGN NO.	DESCRIPTION
GUIDE SIGNS								
E05-1	36X48	12.00	1	12.00			49	GORE EXIT
E05-2	48X36	12.00						EXIT OPEN
E05-2a	48X36	12.00						EXIT CLOSED
GO20-1	60X24	10.00	2	20.00			1	ROAD WORK NEXT XX MILES
GO20-2	48X24	8.00	2	16.00			26	END ROAD WORK
GO20-4	36X18	4.50						PILOT CAR FOLLOW ME
GO20-4a	42X30	8.75						PILOT CAR IN USE WAIT & FOLLOW
GO20-4a	18X12	1.50						PILOT CAR IN USE WAIT & FOLLOW
GO20-5aP	36X24	6.00	10	60.00			54	WORK ZONE (PLAQUE)
MO4-8a	24X18	3.00	3	9.00			52	END DETOUR
MO4-9L	48X36	12.00						DETOUR (LEFT)
MO4-9R	48X36	12.00						DETOUR (RIGHT)
MO4-9P	48X12	4.00						STREET NAME (PLAQUE)
MO4-10L	48X18	6.00						DETOUR ARROW (LEFT)
MO4-10R	48X18	6.00						DETOUR ARROW (RIGHT)
REGULATORY SIGNS								
R1-1	48X48	13.25						STOP
R1-2	48TRI.	6.93	1	6.93			13	YIELD
R1-2a	36X36	9.00						TO ONCOMING TRAFFIC (PLAQUE)
R1-3P	30X12	2.50						ALL WAY (PLAQUE)
R2-1	36X48	12.00	16	192.00			4/25	SPEED LIMIT XX
R3-1	48X48	16.00						NO RIGHT TURN (SYMBOL)
R3-2	48X48	16.00	6	96.00			11	NO LEFT TURN (SYMBOL)
R3-3	36X36	9.00						NO TURNS
R3-4	48X48	16.00						NO U-TURN (SYMBOL)
R3-7L	30X30	6.25						LEFT LANE MUST TURN LEFT
R3-7R	30X30	6.25						RIGHT LANE MUST TURN RIGHT
R4-1	36X48	12.00						DO NOT PASS
R4-2	36X48	12.00						PASS WITH CARE
R4-7a	36X48	12.00						KEEP RIGHT (HORIZONTAL ARROW)
R4-8a	36X48	12.00						KEEP LEFT (HORIZONTAL ARROW)
R4-9	36X48	12.00	2	24.00			46B	STAY IN LANE
R5-1	30X30	6.25						DO NOT ENTER
R5-1a	36X24	6.00						WRONG WAY
R6-1L	54X18	6.75						ONE WAY ARROW (LEFT)
R6-1R	54X18	6.75						ONE WAY ARROW (RIGHT)
R6-2L	24X30	5.00						ONE WAY (LEFT)
R6-2R	24X30	5.00						ONE WAY (RIGHT)
R9-9	24X12	2.00						SIDEWALK CLOSED
R10-6	24X36	6.00						STOP HERE ON RED (45^ ARROW)
R11-2	48X30	10.00	5	50.00			29	ROAD CLOSED
R11-4	60X30	12.50						ROAD CLOSED TO THRU TRAFFIC
MISCELLANEOUS SIGNS								
CONST-3A	60X48	20.00	2	40.00			53	FINE SIGN
CONST-5	96X48	32.00	2	64.00			61	POINT OF PRESENCE
CONST-8	48X36	12.00	2	24.00			60	WORK ZONE NO PHONE ZONE
SPECIAL	48X48	16.00	2	32.00			90	RUMBLE STRIPS AHEAD
SPECIAL	78X60	32.50	1	32.50			101	SPECIAL LILAC EXIT
SPECIAL	108X90	67.50	1	67.50			102	SPECIAL SB LILAC CLOSED AHD
SPECIAL	108X90	67.50	1	67.50			103	SPECIAL NB LILAC CLOSED AHD
SPECIAL	120X72	60.00	3	180.00			104	SPECIAL LILAC CLOSED USE ALT
SPECIAL	36X42	10.50	6	63.00			50A	DETOUR LILAC STRT ARROW
SPECIAL	36X36	9.00	5	45.00			50B	DETOUR LILAC DIAG ARROW
SPECIAL	36X36	9.00	3	27.00			50C	DETOUR LILAC RT ARROW
SPECIAL	36X42	10.50	3	31.50			50D	DETOUR LILAC ST RT ARROW
SPECIAL	36X42	10.50	3	31.50			50E	DETOUR LILAC STRT ARROW
SPECIAL	36X42	10.50	3	31.50			50F	DETOUR LILAC DIAG ARROW
SPECIAL	36X42	10.50	1	10.50			50G	DETOUR LILAC LEFT ARROW
SPECIAL	36X78	19.50	1	10.50			63A	DETOUR 270 EAST STRT ARROW
SPECIAL	36X78	19.50	1	10.50			63C	DETOUR 270 EAST DIAG ARROW
SPECIAL	36X78	19.50	4	78.00			64A	DETOUR 270 WEST STRT ARROW
SPECIAL	36X78	19.50	1	19.50			64B	DETOUR 270 WEST LEFT ARROW
SPECIAL	36X78	19.50	1	19.50			64C	DETOUR 270 WEST ST LT ARROW
SPECIAL	36X78	19.50	2	39.00			64D	DETOUR 270 WEST RIGHT ARROW
SPECIAL	36X78	19.50	1	19.50			64E	DETOUR 270 WEST DIAG ARROW
SPECIAL	36X78	19.50	1	19.50			64F	DETOUR 270 WEST RB THRU ARROW
SPECIAL	36X78	19.50	2	39.00			64G	DETOUR 270 WEST ST RT ARROW

	TOTAL
616-10.05 CONSTRUCTION SIGNS	2359
616-10.10 RELOCATED SIGNS	*

EFFECTIVE: 07-01-2025

ITEM NUMBER	TOTAL QTY	DESCRIPTION
6122008		IMPACT ATTENUATOR 40 MPH (SAND BARRELS)
6122009		IMPACT ATTENUATOR 45 MPH (SAND BARRELS)
6122010		IMPACT ATTENUATOR 50 MPH (SAND BARRELS)
6122012		IMPACT ATTENUATOR 55 MPH (SAND BARRELS)
6122014	(1)**	IMPACT ATTENUATOR 60 MPH (SAND BARRELS)
6122017		IMPACT ATTENUATOR 65 MPH (SAND BARRELS)
6122019		IMPACT ATTENUATOR 70 MPH (SAND BARRELS)
6122020	(1)**	REPLACEMENT SAND BARREL
6122030	(1)**	IMPACT ATTENUATOR (RELOCATION)
6122040	(1)**	WORK ZONE CRASH CUSHION (NARROW)
6122041		WORK ZONE CRASH CUSHION (RELOCATION)
6123001	2	TRUCK MOUNTED ATTENUATOR (TMA)
6161012		BUOYS (BOATS KEEP OUT)
6161013		BUOYS (NO WAKE)
6161014		SPECIAL SIGN ASSEMBLY (BOATS KEEP OUT)
6161020		CHANNELIZER (DRUM-LIKE)
6161022		CHANNELIZER (CONE)
6161025	100	CHANNELIZER (TRIM-LINE)
6161026		CHANNELIZER (VERTICAL PANEL)
6161030	8	TYPE 3 MOVEABLE BARRICADE
6161033	60	DIRECTION INDICATOR BARRICADE
6161040	4	FLASHING ARROW PANEL
6161047		TYPE 3 OBJECT MARKER
6161055		SEQUENTIAL FLASHING WARNING LIGHT
6161070		TUBULAR MARKER
6161095		RADAR SPEED ADVISORY SYSTEM
6161096		CHANGEABLE MESSAGE SIGN, COMMISSION FURNISHED/RETAINED
6161098A	7**	CHANGEABLE MESSAGE SIGN WITHOUT COMM. INTERFACE, CONTRACTOR FURNISHED/RETAINED
6161099		CHANGEABLE MESSAGE SIGN WITH COMM. INTERFACE, CONTRACTOR FURNISHED/RETAINED
6162000A		WORK ZONE TRAFFIC SIGNAL SYSTEM
6162002	12**	TEMPORARY LONG-TERM RUMBLE STRIPS
6173600D		TEMPORARY TRAFFIC BARRIER, CONTRACTOR FURNISHED/RETAINED
6173700B	(1)**	TEMP. TRAFFIC BARRIER ANCHORED, CONTRACTOR FURNISHED/RETAINED
6173706		TEMP. TRAFFIC BARRIER STIFFNESS TRANSITION CONTRACTOR FURNISHED/RETAINED
6174000A		TEMP. TRAFFIC BARRIER HEIGHT TRANSITION, CONTRACTOR FURNISHED/RETAINED
6175010A		RELOCATING TEMPORARY TRAFFIC BARRIER
6175011B		RELOCATING TEMP. TRAFFIC BARRIER ANCHORED
6175013		RELOCATING TEMP. TRAFFIC BARRIER STIFFNESS
6175020A		RELOCATING TEMP. TRAFFIC BARRIER HEIGHT
6208064A		TEMPORARY RAISED PAVEMENT MARKER
9029400		TEMPORARY TRAFFIC SIGNALS
9029401		TEMPORARY TRAFFIC SIGNALS AND LIGHTING

TEMPORARY TRAFFIC CONTROL
1 LUMP SUM

* NO DIRECT PAY WILL BE MADE FOR RELOCATION OF CONSTRUCTION SIGNING OR DEVICES

** NOT INCLUDED IN LUMP SUM TEMPORARY TRAFFIC CONTROL

(1) SEE SUMMARY TABLE ON PREVIOUS SHEET

NOTES:
ALL TRAFFIC CONTROL ITEMS INCLUDED IN PAY ITEM 616-99.01 TEMPORARY TRAFFIC CONTROL, LUMP SUM, UNLESS OTHERWISE NOTED IN THE PLANS. THESE QUANTITIES ARE ONLY AN ESTIMATE AND ARE SUBJECT OT CHANGE BASED ON FIELD CONDITIONS.

SIGN QUANTITIES HAVE BEEN ESTIMATED. TEMPORARY TRAFFIC CONTROL SHALL FOLLOW AT A MINIMUM MUTCD STANDARDS, LATEST EDITION.

ALL WARNING SIGNS SHALL HAVE FLUORESCENT SHEETING.

DISCLAIMER

THE PROFESSIONAL WHOSE SIGNATURE AND PERSONAL SEAL APPEAR HEREON ASSUMES RESPONSIBILITY ONLY FOR WHAT APPEARS ON THIS PAGE, AND DISCLAIMS (PURSUANT TO SECTION 327.411 RSMO) SPECIFICATION, ESTIMATES, REPORTS, OR OTHER DOCUMENTS OR INSTRUMENTS NOT SEALED BY THE UNDERSIGNED PROFESSIONAL RELATING TO OR INTENDED TO BE USED FOR ANY PART OR PARTS OF THE PROJECT TO WHICH THIS PAGE REFERS.

SUMMARY OF QUANTITIES
SHEET 18 OF 18

STATE OF MISSOURI ★ JONATHAN R. LOOS NUMBER PE 2017000326 ★ PROFESSIONAL ENGINEER

DATE PREPARED 5/1/2026
ROUTE I-270 | STATE MO
DISTRICT STL | SHEET NO. 3
COUNTY ST. LOUIS
JOB NO. J6I3020D
CONTRACT ID. .
PROJECT NO. .
BRIDGE NO. .

DESCRIPTION | DATE

MISSOURI HIGHWAYS AND TRANSPORTATION COMMISSION
105 WEST CAPITOL
JEFFERSON CITY, MO 65102
1-888-ASK-MODOT (1-888-275-6636)
MoDOT

HORNER SHIFRIN
401 S. 18TH ST., STE. 400 ST. LOUIS, MO 63103
314-531-4321 - FAX 314-531-6966
WWW.HORNERSHIFRIN.COM
DISCIPLINE: PROFESSIONAL ENGINEERING
CERTIFICATE OF AUTHORITY: 000159
EXPIRATION DATE: DECEMBER 31, 2026

IF A SEAL IS PRESENT ON THIS SHEET IT HAS BEEN ELECTRONICALLY SEALED AND DATED.

670

675

680

685

690

695

MATCHLINE STA 696+00 EXIST. I-270

℄ EXIST. DUNN RD

S77°57'25"E

BEGIN ℄ EXIST. I-270 STA 669+00.00

℄ EXIST. I-270

SCALE

0 100 200 300 400 500

GEOMETRIC DATA
STA 669+00 TO STA 696+00
SHEET 1 OF 3

STATE OF MISSOURI
EUGENE LOUIS KUELKER JR.
NUMBER PE-2010000912
PROFESSIONAL ENGINEER

THIS SHEET HAS BEEN SIGNED, SEALED, AND DATED ELECTRONICALLY.

DATE PREPARED
3/25/2026

ROUTE	STATE
I-270	MO

DISTRICT	SHEET NO.
SL	4

COUNTY
ST. LOUIS

JOB NO.
J6I3020D

CONTRACT ID.

PROJECT NO.

BRIDGE NO.

DATE	DESCRIPTION

IF A SEAL IS PRESENT ON THIS SHEET IT HAS BEEN ELECTRONICALLY SEALED AND DATED.

MISSOURI HIGHWAYS AND TRANSPORTATION COMMISSION

105 WEST CAPITOL
JEFFERSON CITY, MO 65102
1-888-ASK-MODOT (1-888-275-6636)

HDR Engineering, Inc.
1001 Highlands Plaza Drive
Suite 200
St. Louis, MO 63110-1337
314-425-8300
Certificate of Authority: 000856

EXIST. I-270	
CURVE_EX_I-270_3	
PI	707+24.51
PC	701+64.15
PT	712+78.60
Δ	14°50'58.5" (LT)
D	1°19'56.9"
L	1,114.45 (ARC)
T	560.36'
R	4,300.00'

EXIST. LILAC AVE	
CURVE_EX_LILAC	
PI	23+20.73
PC	21.40.70
PT	25+00.00
Δ	9°8'58.1" (RT)
D	2°32'47.3"
L	359.30' (ARC)
T	180.03'
R	2,250.00'

EXIST. RAMP 1	
CURVE_EX_RAMP_1	
PI	8+69.68
PC	6+30.10
PT	11+03.73
Δ	21°18'28.2" (RT)
D	4°29'55.8"
L	473.63' (ARC)
T	239.58'
R	1,273.57'

EXIST. RAMP 2	
CURVE_EX_RAMP_2	
PI	2+71.61
PC	0+00.00
PT	5+43.11
Δ	2°42'55.9" (RT)
D	0°30'0.0"
L	543.11' (ARC)
T	271.61'
R	11,459.20'

EXIST. RAMP 3	
CURVE_EX_RAMP_3	
PI	4+67.90
PC	3+51.04
PT	5+84.37
Δ	8°9'55.0" (RT)
D	3°29'58.0"
L	233.33' (ARC)
T	116.86'
R	1,637.28'

EXIST. RAMP 4	
CURVE_EX_RAMP_4	
PI	8+11.53
PC	7+09.05
PT	9+13.22
Δ	12°14'40.4" (RT)
D	5°59.50.0"
L	204.17' (ARC)
T	102.48'
R	955.37'

MATCHLINE STA 696+00 EXIST. I-270

MATCHLINE STA 723+00 EXIST. I-270

START STA 0+00.00 ℄ EXIST. I-270 STA. 698+96.46 R3

END STA 15+03.73 ℄ EXIST. I-270 STA. 697+71.21 R3

PC STA 701+64.15 R3

PT STA 11+03.73

PC STA 6+30.10

PT STA 5+43.11

START STA 8+00.00

℄ EXIST. LILAC AVE

STA 13+15.01 ℄ EXIST. LILAC AVE = STA 14+26.56 ℄ EXIST. RAMP 3

STA 13+16.16 ℄ EXIST. LILAC AVE = STA 0+04.12 ℄ EXIST. RAMP 1

START STA 0+04.12

END STA 14+26.56

S07°20'24"W

PT STA 5+84.37

CURVE_EX_RAMP_3

℄ EXIST. DUNN RD

N77°41'45"W

S80°59'36"W

℄ EXIST. RAMP 1

℄ EXIST. RAMP 3

N82°15'47"W

DETAIL A

POT STA 13+24.98

PT STA 712+78.60 R3

CURVE_EX_RAMP_1

CURVE_EX_I-270_3

℄ EXIST. I-270

S06°47'34"W

STA 712+51.52 ℄ EXIST. I-270 = STA 15+49.27 ℄ EXIST. LILAC AVE

CURVE_EX_RAMP_2

℄ EXIST. RAMP 2

S75°31'30"E

℄ EXIST. RAMP 4

N74°37'36"E

CURVE_EX_RAMP_4

PC STA 7+09.05

PT STA 9+13.22

N86°52'15"E

STA 17+78.57 ℄ EXIST. LILAC AVE = STA 0+03.74 ℄ EXIST. RAMP 4

STA 17+80.36 ℄ EXIST. LILAC AVE = STA 13+65.54 ℄ EXIST. RAMP 2

POT STA 17+85.74

DETAIL B

END STA 13+65.54

S06°16'21"W

START STA 0+03.74

PC STA 21+40.70

CURVE_EX_LILAC

END STA 25+00.00

SCALE

0 100 200 300 400 500

DETAIL A

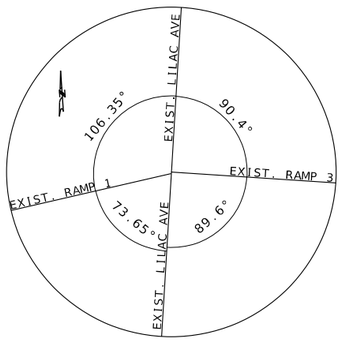

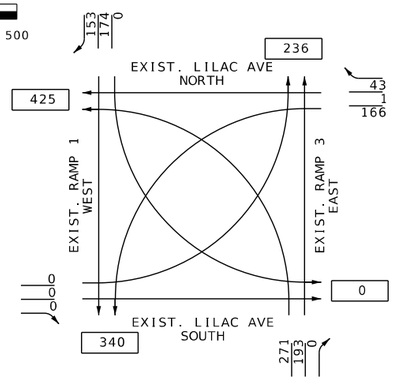

TRAFFIC FLOW DIAGRAM
ESTIMATED - 2046
TRAFFIC VOLUME
TRUCKS - 7%

DETAIL B

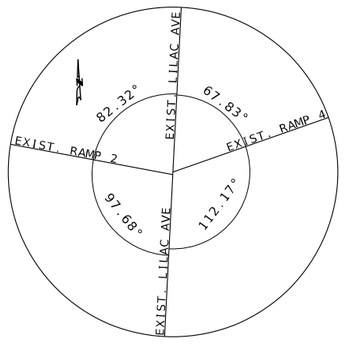

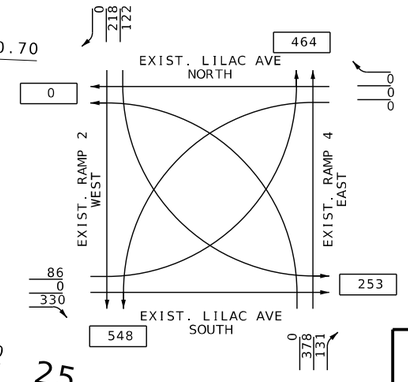

TRAFFIC FLOW DIAGRAM
ESTIMATED - 2046
TRAFFIC VOLUME
TRUCKS - 11%

GEOMETRIC DATA
STA 696+00 TO STA 723+00
SHEET 2 OF 3

STATE OF MISSOURI
EUGENE LOUIS KUELKER JR.
NUMBER PE-2011000912
PROFESSIONAL ENGINEER

THIS SHEET HAS BEEN SIGNED, SEALED, AND DATED ELECTRONICALLY.

DATE PREPARED 3/25/2026

ROUTE I-270 | STATE MO

DISTRICT SL | SHEET NO. 5

COUNTY ST. LOUIS

JOB NO. J6I3020D

CONTRACT ID.

PROJECT NO.

BRIDGE NO.

DESCRIPTION | DATE

MISSOURI HIGHWAYS AND TRANSPORTATION COMMISSION
105 WEST CAPITOL
JEFFERSON CITY, MO 65102
1-888-ASK-MODOT (1-888-275-6636)

HDR Engineering, Inc.
1001 Highlands Plaza Drive
Suite 200
St. Louis, MO 63110-1337
314-425-8300
Certificate of Authority: 000856

IF A SEAL IS PRESENT ON THIS SHEET IT HAS BEEN ELECTRONICALLY SEALED AND DATED.

EXIST. RAMP 3	
CURVE_EX_RAMP_3	
PI	4+67.90
PC	3+51.04
PT	5+84.37
Δ	8°9'55.0" (RT)
D	3°29'58.0"
L	233.33' (ARC)
T	116.86'
R	1,637.28'

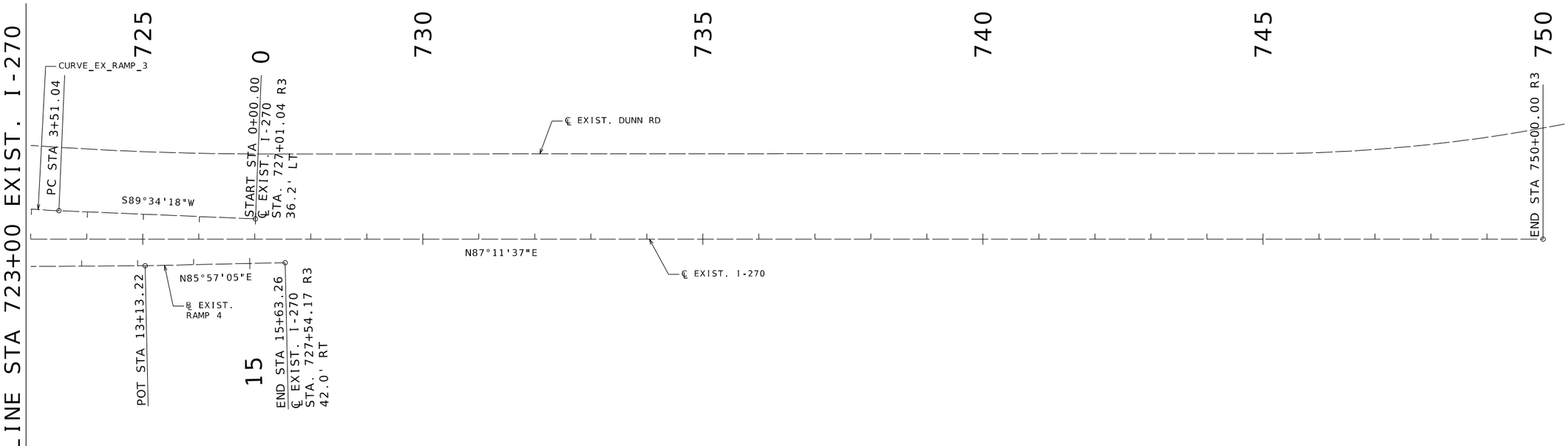

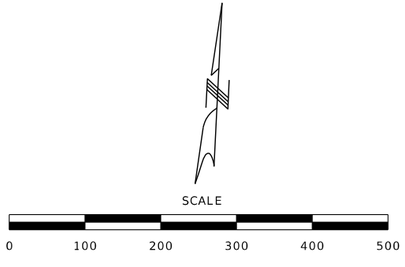

GEOMETRIC DATA
STA 723+00 TO STA 750+00
SHEET 3 OF 3

HDR Engineering, Inc.
1001 Highlands Plaza Drive
Suite 200
St. Louis, MO 63110-1337
314-425-8300
Certificate of Authority: 000856

MISSOURI HIGHWAYS AND TRANSPORTATION COMMISSION

105 WEST CAPITOL
JEFFERSON CITY, MO 65102
1-888-ASK-MODOT (1-888-275-6636)

DATE	DESCRIPTION

STATE OF MISSOURI
EUGENE LOUIS KUELKER JR.
NUMBER PE-2010000912
PROFESSIONAL ENGINEER

THIS SHEET HAS BEEN SIGNED, SEALED, AND DATED ELECTRONICALLY.

IF A SEAL IS PRESENT ON THIS SHEET IT HAS BEEN ELECTRONICALLY SEALED AND DATED.

DATE PREPARED	3/25/2026
ROUTE	I-270
STATE	MO
DISTRICT	SL
SHEET NO.	6
COUNTY	ST. LOUIS
JOB NO.	J6I3020D
CONTRACT ID.	
PROJECT NO.	
BRIDGE NO.	

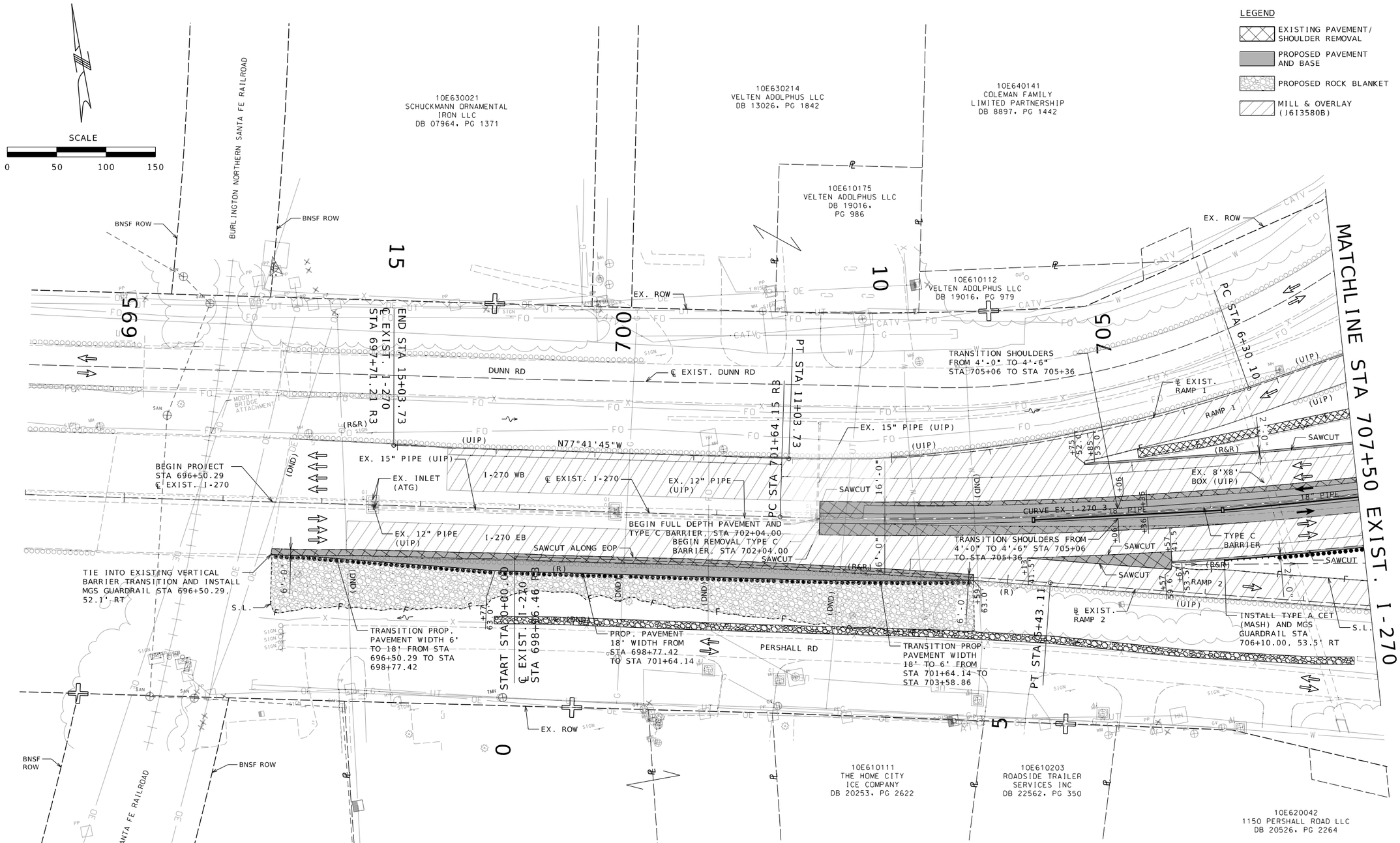

GENERAL NOTES:

1. ANY WORK INDICATED ON THE PLANS THAT EXTENDS BEYOND THE PROJECT LIMITS IS CONSIDERED INCIDENTAL TO AND A PART OF THE CONSTRUCTION OF THIS PROJECT.
2. ALL BEARINGS ARE BASED ON STATE PLANS BEARINGS, EASTERN ZONE.
3. SEE DRAINAGE SHEETS FOR PROPOSED DRAINAGE DETAILS.
4. SEE ITS SHEETS FOR PROPOSED ITS DETAILS.
5. SEE LIGHTING SHEETS FOR PROPOSED LIGHTING DETAILS.
6. SEE PLAN AND PROFILE SHEETS FOR LILAC AVE DETAILS.
7. ALL EXISTING IMPROVEMENTS LOCATED WITHIN THE SLOPE LIMITS SHOWN ON THE PLANS ARE TO BE REMOVED UNLESS OTHERWISE NOTED ON THE PLANS.
8. ALL STATIONS AND OFFSETS ARE FROM ℄ EXIST. I-270 UNLESS NOTED.
9. ALL PROPOSED WORK ON I-270 TO FOLLOW THE EXISTING PROFILE OF I-270.
10. FOR TURNING DIAGRAMS AND INTERSECTION ANGLES SEE GEOMETRIC DATA SHEETS.
11. ALL INFORMATION REGARDING THE MILL & OVERLAY OF I-270 AND THE RAMPS IS SHOWN FOR INFORMATION ONLY AND A PART OF J6I3580B.

I-270 ROADWAY PLAN
STA 694+00 TO STA 707+50
SHEET 1 OF 4

STATE OF MISSOURI
EUGENE LOUIS KUELKER JR.
NUMBER PE-2010000912
PROFESSIONAL ENGINEER

THIS SHEET HAS BEEN SIGNED, SEALED, AND DATED ELECTRONICALLY.

DATE PREPARED: 3/25/2026
ROUTE: I-270 | STATE: MO
DISTRICT: SL | SHEET NO.: 7
COUNTY: ST. LOUIS
JOB NO.: J6I3020D
CONTRACT ID.:
PROJECT NO.:
BRIDGE NO.:

DESCRIPTION | DATE

IF A SEAL IS PRESENT ON THIS SHEET IT HAS BEEN ELECTRONICALLY SEALED AND DATED.

MISSOURI HIGHWAYS AND TRANSPORTATION COMMISSION
105 WEST CAPITOL
JEFFERSON CITY, MO 65102
1-888-ASK-MODOT (1-888-275-6636)

HDR Engineering, Inc.
1001 Highlands Plaza Drive
Suite 200
St. Louis, MO 63110-1337
314-425-8300
Certificate of Authority: 000856

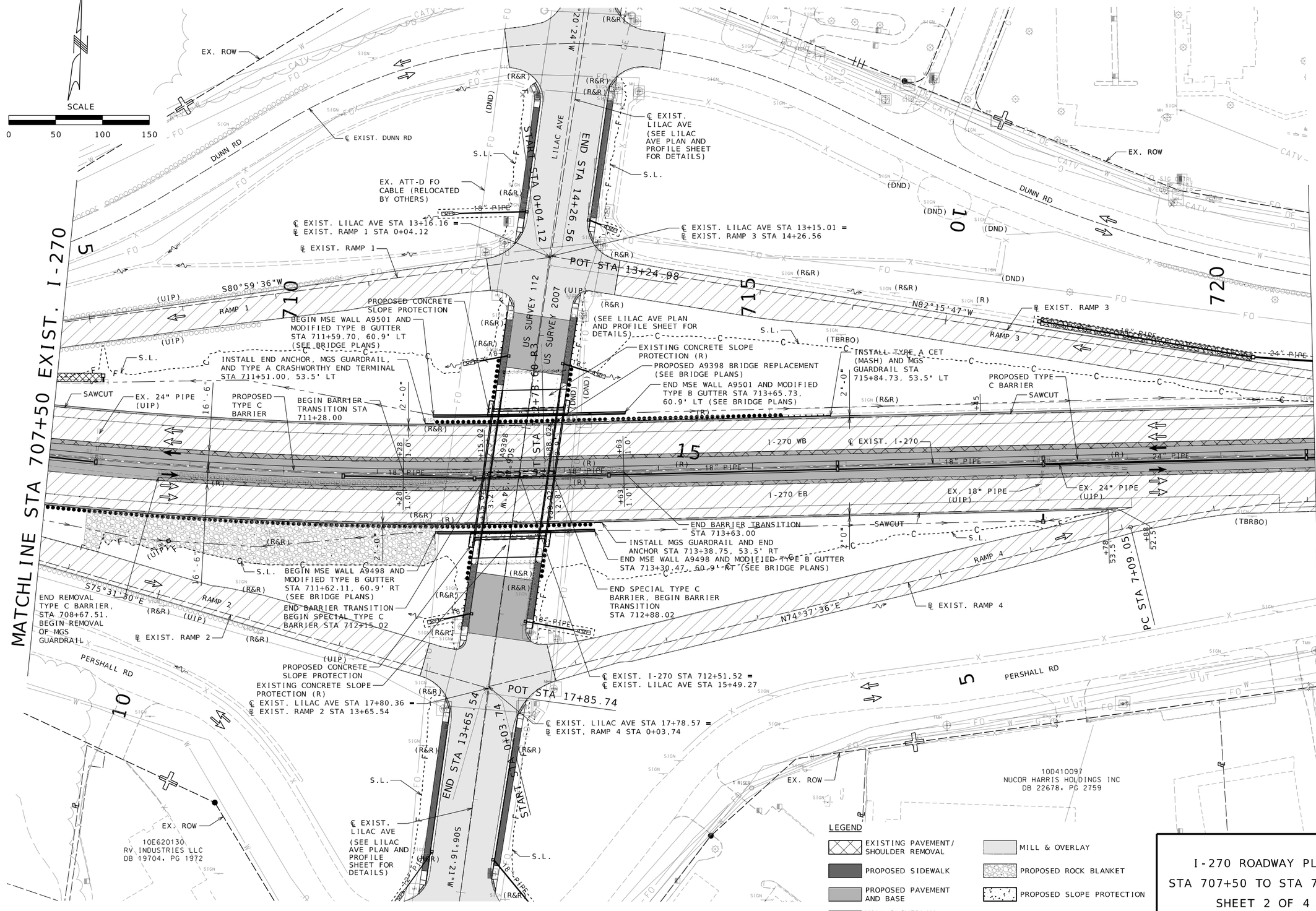

I-270 ROADWAY PLAN
STA 707+50 TO STA 721+00
SHEET 2 OF 4

STATE OF MISSOURI
EUGENE LOUIS KUEKER JR.
NUMBER PE-2010000912
PROFESSIONAL ENGINEER

THIS SHEET HAS BEEN SIGNED, SEALED, AND DATED ELECTRONICALLY.

DATE PREPARED: 3/25/2026
ROUTE: I-270 | STATE: MO
DISTRICT: SL | SHEET NO.: 8
COUNTY: ST. LOUIS
JOB NO.: J6I3020D
CONTRACT ID.:
PROJECT NO.:
BRIDGE NO.:

DESCRIPTION | DATE

IF A SEAL IS PRESENT ON THIS SHEET IT HAS BEEN ELECTRONICALLY SEALED AND DATED.

MISSOURI HIGHWAYS AND TRANSPORTATION COMMISSION
105 WEST CAPITOL
JEFFERSON CITY, MO 65102
1-888-ASK-MODOT (1-888-275-6636)

HDR Engineering, Inc.
1001 Highlands Plaza Drive
Suite 200
St. Louis, MO 63110-1337
314-425-8300
Certificate of Authority: 000856

MATCHLINE STA 721+00 EXIST. I-270

MATCHLINE STA 734+50 EXIST. I-270

10D430224
PR RT II LLC
DB 20926, PG 2186

10D440225
RIVER TRACE LLC
DB 22920, PG 829

EX. 12" PIPE (UIP)

10D1-026D (UIP)

EX. 30" PIPE (UIP)

10D1-031D (UIP)

EX. ROW

℄ EXIST. DUNN RD

DUNN RD

PT STA 5+84.37

BEGIN TYPE D BARRIER AS RETAINING WALL AND TYPE A GUTTER STA 722+77.18

PC STA 3+51.04

18" PIPE SAWCUT

S.L.

℄ EXIST. I-270 STA 727+01.04 R3

START STA 0+00.00

BEGIN PROPOSED 4' FBD STA 732+10.00, 72.1' LT, EL. 476.15

REMOVE EX. CONCRETE PAVED DITCH

END PROPOSED 4' FBD, TIE INTO EXISTING STA 734+17.00, 109.8' LT EL. 474.36

END TYPE D BARRIER AS RETAINING WALL AND TYPE A GUTTER STA 730+60.00. INSTALL VERTICAL BARRIER TRANSITION AND TYPE A CET (MASH)

INSTALL TYPE A CET (MASH) AND MGS GUARDRAIL STA 732+40.00, 53.5' LT

SAWCUT AND PAVEMENT REMOVAL BY OTHERS

SAWCUT

℄ EXIST. RAMP 3

℄ EXIST. RAMP 4

I-270 WB

℄ EXIST. I-270

I-270 EB

24" PIPE

18" PIPE

S89°34'18"W

N86°52'15"E

N85°57'05"E

N87°11'37"E

10D1-048D (UIP)

EX. 15" PIPE (UIP)

10D1-049D (UIP)

EX. 36"X60" PIPE (UIP)

PT STA 9+13.22

POT STA 13+13.22

PROPOSED TYPE C BARRIER

℄ EXIST. I-270 STA 727+54.17 R3

INSTALL TYPE A CET (MASH) AND MGS GUARDRAIL STA 729+45.00, 53.5' RT

PERSHALL RD

EX. TYPE E CRASHWORTHY END TERMINAL (R)

EVERSTREAM

10D420096
DDI MEDIA
DB 17364, PG 2298

10D420104
TEMPLE OF PRAISE CHURCH
DB 19022, PG 709

10D420122
ADOLPHUS MARK
DB 17353, PG 3088

10D410086
REPUBLIC OF PRESTON LLC
DB 21402, PG 2259

LEGEND

- EXISTING PAVEMENT/ SHOULDER REMOVAL
- PROPOSED PAVEMENT AND BASE
- MILL & OVERLAY (J6I3580B)

SCALE

0 50 100 150

I-270 ROADWAY PLAN
STA 721+00 TO STA 734+50
SHEET 3 OF 4

STATE OF MISSOURI
EUGENE LOUIS KUEKER JR.
NUMBER PE-2010009912
PROFESSIONAL ENGINEER

THIS SHEET HAS BEEN SIGNED, SEALED, AND DATED ELECTRONICALLY.

IF A SEAL IS PRESENT ON THIS SHEET IT HAS BEEN ELECTRONICALLY SEALED AND DATED.

DATE PREPARED	
3/25/2026	
ROUTE	STATE
I-270	MO
DISTRICT	SHEET NO.
SL	9
COUNTY	
ST. LOUIS	
JOB NO.	
J6I3020D	
CONTRACT ID.	
PROJECT NO.	
BRIDGE NO.	

DESCRIPTION	DATE

MISSOURI HIGHWAYS AND TRANSPORTATION COMMISSION
105 WEST CAPITOL
JEFFERSON CITY, MO 65102
1-888-ASK-MODOT (1-888-275-6636)

HDR Engineering, Inc.
1001 Highlands Plaza Drive
Suite 200
St. Louis, MO 63110-1337
314-425-8300
Certificate of Authority: 000856

MATCHLINE STA 734+50 EXIST. I-270

LEGEND

- EXISTING PAVEMENT/ SHOULDER REMOVAL
- PROPOSED PAVEMENT AND BASE
- PROPOSED ROCK BLANKET
- MILL & OVERLAY (J6I3580B)

10D440023
BRANGER JOE A
DB 22781, PG 732

10D420074
PATTERSON KENNETH R
MATTIE F H/W
DB 10744, PG 2274

10D510098
BLACKMON KYLE R
& DALE REVANS H/W
DB 10961, PG 1452

10D530063
BLESSED HOPE
BIBLE CHURCH
DB 10433, PG 0327

735 740 745

END FULL DEPTH PAVEMENT, BEGIN MILL & OVERLAY (J6I3580B STA 734+60)

EX. ROW

℄ EXIST. DUNN RD

DUNN RD

MGS GUARDRAIL INSTALLATION BY OTHERS (DND)

SAWCUT AND PAVEMENT REMOVAL BY OTHERS

STATION EQUATION
J6I3020D STA 738+60 =
J6I3020C STA 740+00

EXIST. TEMPORARY TRAFFIC BARRIER (REMOVED BY OTHERS)

END TYPE C BARRIER, TIE INTO J6I3020C STA 740+17.93 (J6I3020D) = STA 741+57.39 (J6I3020C)

I-270 WB

℄ EXIST. I-270

I-270 EB

SAWCUT

REMOVE EXIST. TEMPORARY TRAFFIC BARRIER

INSTALL DRIVE GATE (CHAIN-LINK) MIN. 14' WIDTH. STA 736+10.00 TO STA 736+24.00

PERSHALL RD

PROPOSED CHAIN-LINK FENCE (60 IN.) FROM STA 735+56.00 TO STA 737+37.00

REMOVE EXIST. TEMPORARY PAVEMENT AND SHAPING SLOPES FOR GUARDRAIL

EX. PIPE CULVERT AND BOX CULVERT

TIE INTO EXIST. FENCE STA 739+45.00, 143.0' RT

INSTALL WALK GATE (CHAIN-LINK) MIN. 6' WIDTH. STA 739+38.00 TO STA 739+00.00

END MGS GUARDRAIL, INSTALL MGS END ANCHOR STA 746+04.76

EX. ROW

PROPOSED BLACK POWDER COATED CHAIN-LINK FENCE (60 IN.) FROM STA 737+37.00 TO STA 739+45.00

10D420030
FAITH MIRACLE TEMPLE CHURCH OF GOD
DB 21304, PG 1815

SCALE
0 50 100 150

I-270 ROADWAY PLAN
STA 734+50 TO STA 748+00
SHEET 4 OF 4

STATE OF MISSOURI
EUGENE LOUIS KUEKER JR.
NUMBER PE-2010009912
PROFESSIONAL ENGINEER

THIS SHEET HAS BEEN SIGNED, SEALED, AND DATED ELECTRONICALLY.

IF A SEAL IS PRESENT ON THIS SHEET IT HAS BEEN ELECTRONICALLY SEALED AND DATED.

DATE PREPARED 3/25/2026

ROUTE	STATE
I-270	MO
DISTRICT	SHEET NO.
SL	10

COUNTY: ST. LOUIS
JOB NO.: J6I3020D
CONTRACT ID.:
PROJECT NO.:
BRIDGE NO.:

DATE	DESCRIPTION

MISSOURI HIGHWAYS AND TRANSPORTATION COMMISSION
105 WEST CAPITOL
JEFFERSON CITY, MO 65102
1-888-ASK-MODOT (1-888-275-6636)

HDR Engineering, Inc.
1001 Highlands Plaza Drive
Suite 200
St. Louis, MO 63110-1337
314-425-8300
Certificate of Authority: 000856

LEGEND

- EXISTING PAVEMENT/ SHOULDER REMOVAL
- PROPOSED SIDEWALK
- PROPOSED PAVEMENT AND BASE
- MILL & OVERLAY
- PROPOSED SLOPE PROTECTION
- MILL & OVERLAY (J6I3580B)

REMOVE AND REPLACE EX CURB AND GRASS BUFFER

BEGIN PAVING, MATCH EXISTING STA 10+05.00 ℄ EXIST. LILAC AVE

41.8' SAWCUT

10E640013 BEAUCHAMP DOUGLAS J ETAL J/T DB 7727, PG 1367

41.6' SAWCUT. END MILL & OVERLAY. MATCH EXISTING STA 11+02.03 ℄ EXIST. LILAC AVE 80.2' RT

EX. ROW

℄ EXIST. DUNN RD

DUNN RD

EX. ROW

℄ EXIST. RAMP 3

37.1' SAWCUT. END MILL & OVERLAY. MATCH EXISTING STA 13+15.52 ℄ EXIST. LILAC AVE 73.6' LT

℄ EXIST. LILAC AVE STA 13+15.01 = ℄ RAMP 3 STA 14+26.56

39.4' SAWCUT. END MILL & OVERLAY. MATCH EXISTING STA 10+80.09 ℄ EXIST. LILAC AVE 84.5' LT

SEE GUARDRAIL DETAILS

PROP. 6' SIDEWALK

END STA 14+26.56

POT STA 13+24.98

US SURVEY 2007

US SURVEY 112

LILAC AVE

S07°20'24"W

START STA 0+04.12

PROP. 6' SIDEWALK

℄ EXIST. LILAC AVE STA 13+16.16 = ℄ RAMP 1 STA 0+04.12

34.5' SAWCUT. END MILL & OVERLAY. MATCH EXISTING STA 13+34.64 ℄ EXIST. LILAC AVE 65.2' RT

SEE GUARDRAIL DETAILS

℄ EXIST. RAMP 1

PROP. MSE WALL A9501 (SEE BRIDGE PLANS)

S.L.

PROP. SLOPE PROTECTION

BEGIN FULL DEPTH PAVEMENT STA 13+80

PROP. 6.5' SIDEWALK

PROP. 6.5' SIDEWALK

PROP. CONCRETE APPROACH PAVEMENT

PROP. SLOPE PROTECTION

BRIDGE APPROACH SLAB (MINOR) (SEE BRIDGE PLANS)

PROPOSED A9398 BRIDGE REPLACEMENT (SEE BRIDGE PLANS)

REMOVE EXISTING BRIDGE A0221 (55'-55'-55'-40') CONTINUOUS VOIDED SLAB SPANS

℄ EXIST. I-270

S.L.

REMOVE EXIST. BRIDGE A0221 PROP BRIDGE A9398 (SEE BRIDGE PLANS)

PROP. MSE WALL A9398 (SEE BRIDGE PLANS)

PROP. SLOPE PROTECTION

PROP. CONC. APPROACH PAVEMENT

I-270 WB

I-270 EB

BRIDGE APPROACH SLAB (MINOR) (SEE BRIDGE PLANS)

PROP. SLOPE PROTECTION

℄ EXIST. RAMP 4

SEE GUARDRAIL DETAILS

40.1' SAWCUT. END MILL & OVERLAY. MATCH EXISTING STA 17+51.68 ℄ EXIST. LILAC AVE 66.0' LT

℄ EXIST. LILAC AVE STA 17+78.57 = ℄ RAMP 4 STA 0+03.74

PROP. 6' SIDEWALK

POT STA 17+85.74

START STA 0+03.74

℄ EXIST. LILAC AVE

END STA 13+65.54

S06°16'21"W

PROP. 6' SIDEWALK

℄ EXIST. LILAC AVE STA 17+80.36 = ℄ RAMP 2 STA 13+65.54

36.4' SAWCUT. END MILL & OVERLAY. MATCH EXISTING STA 17+70.53 ℄ EXIST. LILAC AVE 72.9' RT

END FULL DEPTH PAVEMENT STA 17+25

PROP. 6.5' SIDEWALK

SEE GUARDRAIL DETAILS

℄ EXIST. RAMP 2

PROP. SLOPE PROTECTION

40.2' SAWCUT. END MILL & OVERLAY. MATCH EXISTING STA 20+34.18 ℄ EXIST. LILAC AVE 88.7' LT

EX. ROW

PERSHALL RD

PROP. 6' SIDEWALK

RC STA 21+40.70

34.3' SAWCUT. END MILL & OVERLAY. MATCH EXISTING STA 20+38.04 ℄ EXIST. LILAC AVE 66.4' RT

PERSHALL RD

EX. ROW

83.7' SAWCUT

END PAVING, MATCH EXISTING STA 21+99.83 ℄ EXIST. LILAC AVE

PROP. 6' SIDEWALK

CURVE EX LILAC

SCALE

0 50 100 150

BM #1 - CUT SQUARE ON WEST SIDE OF CONC TRAFFIC SIGNAL BASE; ON NORTH SIDE OF I-270 ALSO BEING ON THE EAST SIDE OF LILAC AVE ELEV= 518.16

BM #2 - CUT SQUARE ON WEST SIDE OF CONC TRAFFIC SIGNAL BASE; SOUTH OF I-270 ALSO BEING ON THE EAST SIDE OF LILAC AVE ELEV= 508.26

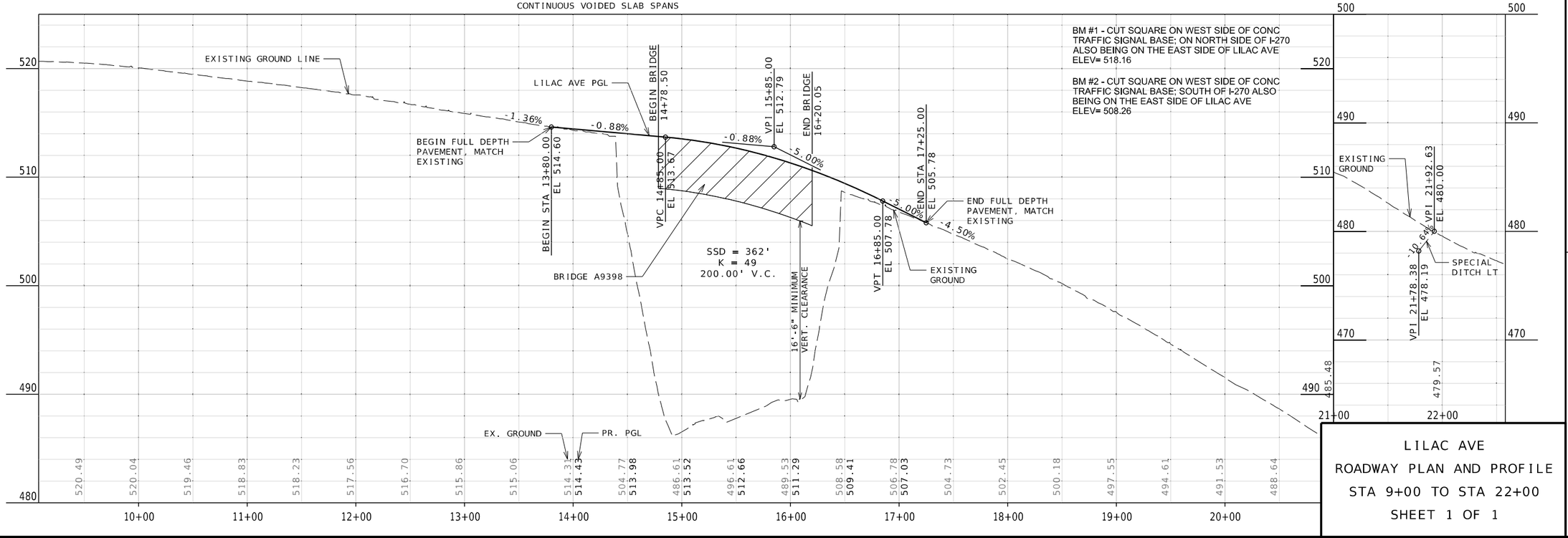

LILAC AVE
ROADWAY PLAN AND PROFILE
STA 9+00 TO STA 22+00
SHEET 1 OF 1

STATE OF MISSOURI
EUGENE LOUIS KUEKER JR.
NUMBER PE-2010000912
PROFESSIONAL ENGINEER

THIS SHEET HAS BEEN SIGNED, SEALED, AND DATED ELECTRONICALLY.

DATE PREPARED	3/25/2026
ROUTE	I-270
STATE	MO
DISTRICT	SL
SHEET NO.	11
COUNTY	ST. LOUIS
JOB NO.	J6I3020D
CONTRACT ID.	
PROJECT NO.	
BRIDGE NO.	

DATE	DESCRIPTION

IF A SEAL IS PRESENT ON THIS SHEET IT HAS BEEN ELECTRONICALLY SEALED AND DATED.

MISSOURI HIGHWAYS AND TRANSPORTATION COMMISSION

105 WEST CAPITOL
JEFFERSON CITY, MO 65102
1-888-ASK-MODOT (1-888-275-6636)

MoDOT

HDR Engineering, Inc.
1001 Highlands Plaza Drive
Suite 200
St. Louis, MO 63110-1337
314-425-8300
Certificate of Authority: 000856

c:\pwworking\central01\d4169511\011_PL05_J6I3020D_I50_Lilac_Ave.dgn 10:31:38 AM 3/25/2026

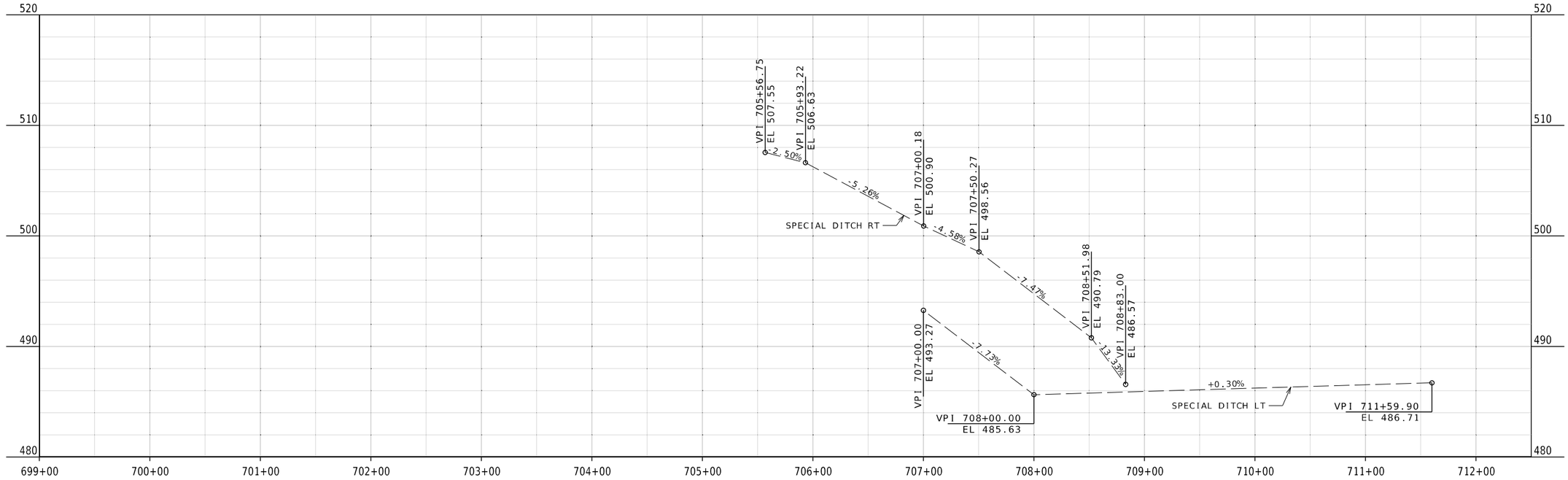

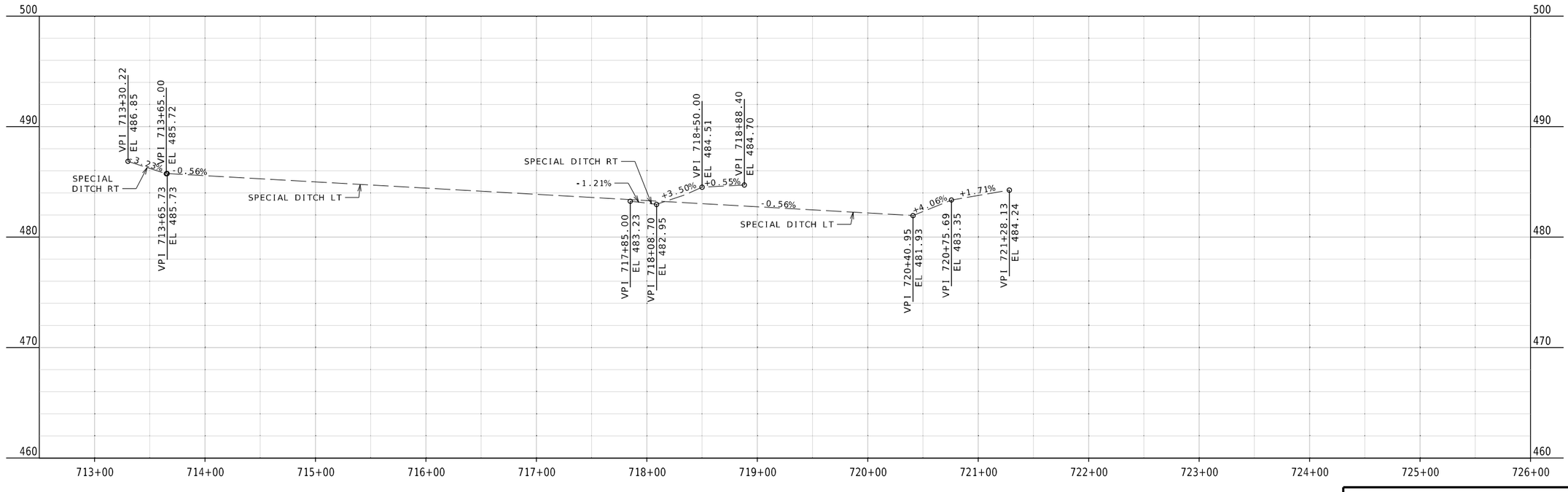

SPECIAL DITCH PROFILES
I-270
STA 699+00 TO STA 726+00
SHEET 1 OF 1

STATE OF MISSOURI
EUGENE LOUIS KUEKER JR.
NUMBER PE-2011000912
PROFESSIONAL ENGINEER

THIS SHEET HAS BEEN SIGNED, SEALED, AND DATED ELECTRONICALLY.

IF A SEAL IS PRESENT ON THIS SHEET IT HAS BEEN ELECTRONICALLY SEALED AND DATED.

DATE PREPARED: 3/25/2026

ROUTE	STATE
I-270	MO
DISTRICT	SHEET NO.
SL	12

COUNTY: ST. LOUIS
JOB NO.: J6I3020D
CONTRACT ID.:
PROJECT NO.:
BRIDGE NO.:

DESCRIPTION	DATE

MISSOURI HIGHWAYS AND TRANSPORTATION COMMISSION
105 WEST CAPITOL
JEFFERSON CITY, MO 65102
1-888-ASK-MODOT (1-888-275-6636)

HDR Engineering, Inc.
1001 Highlands Plaza Drive
Suite 200
St. Louis, MO 63110-1337
314-425-8300
Certificate of Authority: 000856

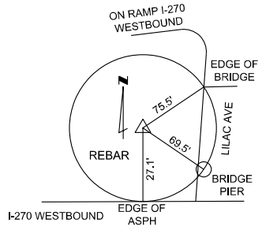

REFERENCE TIE

CONTROL POINT #3
N 1068517.685
E 904895.330
ELEV 493.08
REBAR WITH CAP IN GRASS; APPROX 380 FEET SOUTH OF THE INTERSECTION OF DUNN RD AND LILAC AVE, AND APPROX 75 FEET WEST OF LILAC AVE IN THE GRASS AT I-270 AND THE ON RAMP TO I-270 WESTBOUND

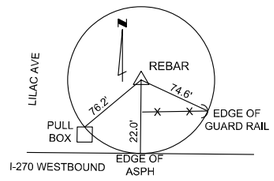

REFERENCE TIE

CONTROL POINT #4
N 1068522.190
E 905123.137
ELEV 491.55
REBAR WITH CAP IN GRASS; APPROX 380 FEET SOUTH OF THE INTERSECTION OF DUNN RD AND LILAC AVE, AND APPROX 130 FEET EAST OF LILAC AVE IN THE GRASS AT I-270 AND THE OFF RAMP FROM I-270 WESTBOUND

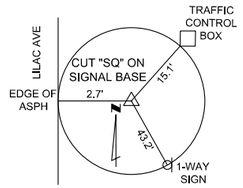

REFERENCE TIE

BM #1 - CUT SQUARE ON WEST SIDE OF CONC TRAFFIC SIGNAL BASE; ON NORTH SIDE OF I-270 ALSO BEING ON THE EAST SIDE OF LILAC AVE
ELEV= 518.16

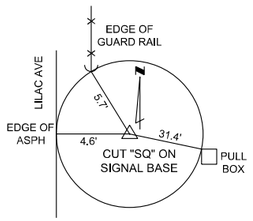

REFERENCE TIE

BM #2 - CUT SQUARE ON WEST SIDE OF CONC TRAFFIC SIGNAL BASE; SOUTH OF I-270 ALSO BEING ON THE EAST SIDE OF LILAC AVE
ELEV= 508.26

REFERENCE POINTS
SHEET 1 OF 1

STATE OF MISSOURI
EUGENE LOUIS KUEVER JR.
NUMBER PE-2011000912
PROFESSIONAL ENGINEER

THIS SHEET HAS BEEN SIGNED, SEALED, AND DATED ELECTRONICALLY.

DATE PREPARED
3/25/2026

ROUTE	STATE
I-270	MO
DISTRICT	SHEET NO.
SL	13

COUNTY
ST. LOUIS

JOB NO.
J6I3020D

CONTRACT ID.

PROJECT NO.

BRIDGE NO.

DESCRIPTION	DATE

IF A SEAL IS PRESENT ON THIS SHEET IT HAS BEEN ELECTRONICALLY SEALED AND DATED.

MISSOURI HIGHWAYS AND TRANSPORTATION COMMISSION

105 WEST CAPITOL
JEFFERSON CITY, MO 65102
1-888-ASK-MODOT (1-888-275-6636)

HDR Engineering, Inc.
1001 Highlands Plaza Drive
Suite 200
St. Louis, MO 63110-1337
314-425-8300
Certificate of Authority: 000856

ALL PROJECT COORDINATES HAVE BEEN PROJECTED FROM THE MISSOURI STATE PLANE COORDINATE (SPC) SYSTEM OF 1983 USING AN AVERAGE PROJECT PROJECTION (GRID TO GROUND) FACTOR. TO GET BACK TO STATE PLANE COORDINATES, MULTIPY THE PROJECT COORDINATES BY THE AVERAGE GRID FACTOR AS SHOWN IN THE "REFERENCE CONTROL INFORMATION" PORTION OF THIS TABLE.

PROJECT COORDINATE INFORMATION

COORDINATE SYSTEM	Stateplane MO East FIPS 2401
HORIZONTAL DATUM	NAD 83
VERTICAL DATUM	NAVD 88
GEOID MODEL	Geoid 12B
ELEVATIONS DETERMINED BY	
PROJECT PROJECTION FACTOR	1.0000855

REFERENCE CONTROL INFORMATION

COORDINATE SYSTEM	Stateplane MO East FIPS 2401
CONTROL STATION	MOOF
DESIGNATION	MODOT OFALLON CORS ARP
CORS_ID	MOOF
PID	DM4688
LATITUDE	38°45'14.06179
LONGITUDE	90°41'44.78025
NORTHING (M)	324131.1530
EASTING (M)	232983.4880
ZONE	2401
PROJECT AVERAGE GRID FACTOR	0.99991451

EXAMPLE OF PROJECT COORDINATE TO S.P.C.

PROJECT NORTHING X AVERAGE GRID FACTOR
= STATE PLANE NORTHING
PROJECT EASTING X AVERAGE GRID FACTOR
= STATE PLANE EASTING
EXAMPLE: CONTROL POINT #3
N 1083739.801 X 0.99991221 = N 1083644.659
E 713463.461 X 0.99991221 = E 713400.826

LINEAR UNIT CONVERSION

1 METER = 3.280833333 US SURVEY FEET (USFT)

COORDINATE POINT LISTING

SHEET NO	STATION	LOCATION	OFFSET (USFT)	MODIFIED STATE PLANE (GROUND) NORTHING (US SURVEY FT)	EASTING (US SURVEY FT)	ELEVATION (US SURVEY FT)	DESCRIPTION	POINT ID
PROJECT CONTROL POINTS								
5	711+69.45	LT	78.35'	1068517.6850	904895.3300	493.08	REBAR WITH CAP IN GRASS	3
5	713+96.55	LT	73.13'	1068522.1900	905123.1370	491.55	REBAR WITH CAP IN GRASS	4
ALIGNMENTS								
4	669+00.00	EXIST. I-270	0.00'	1069213.9132	900708.8733		BEGINNING OF EXIST. CENTERLINE	
4	696+50.29	EXIST. I-270	0.00'	1068640.0722	903398.6319		BEGINNING OF PROJECT	
5	701+64.15	EXIST. I-270	0.00'	1068532.8565	903901.1831		P.C.	CURVE_EX_I-270_3
5	707+24.52	EXIST. I-270	0.00'	1068415.9390	904449.2144		P.I.	CURVE_EX_I-270_3
5	712+51.52	EXIST. I-270	0.00'	1068442.1364	904981.8518		INTERSECTION WITH ℄ EXIST. LILAC AVE	
5	712+78.60	EXIST. I-270	0.00'	1068443.3774	905008.9063		P.T.	CURVE_EX_I-270_3
6	746+04.76	EXIST. I-270	0.00'	1068606.2346	908331.0759		END OF PROJECT	
6	750+00.00	EXIST. I-270	0.00'	1068625.5866	908725.8420		END OF EXIST. CENTERLINE	
5	0+04.12	EXIST. RAMP 1	0.00'	1068673.6040	905009.5084		BEGINNING OF EXIST. BASELINE & INTERSECTION WITH ℄ EXIST. LILAC AVE	
5	6+30.10	EXIST. RAMP 1	0.00'	1068575.6061	904391.2468		P.C.	CURVE_EX_RAMP_1
5	8+69.68	EXIST. RAMP 1	0.00'	1068538.0992	904154.6183		P.I.	CURVE_EX_RAMP_1
5	11+03.73	EXIST. RAMP 1	0.00'	1068589.1420	903920.5359		P.T.	CURVE_EX_RAMP_1
5	15+03.73	EXIST. RAMP 1	0.00'	1068674.3850	903529.591		END OF EXIST. BASELINE	
5	0+00.00	EXIST. RAMP 2	0.00'	1068541.4916	903629.3064		BEGINNING OF EXIST. BASELINE, P.C.	CURVE_EX_RAMP_2
5	2+71.61	EXIST. RAMP 2	0.00'	1068486.1369	903895.2117		P.I.	CURVE_EX_RAMP_2
5	5+43.11	EXIST. RAMP 2	0.00'	1068418.2465	904158.1957		P.T.	CURVE_EX_RAMP_2
5	13+65.54	EXIST. RAMP 2	0.00'	1068212.6724	904954.5188		END OF EXIST. BASELINE & INTERSECTION WITH ℄ EXIST. LILAC AVE	
6	0+00.00	EXIST. RAMP 3	0.00'	1068549.1323	906427.8675		BEGINNING OF EXIST. BASELINE	
6	3+51.04	EXIST. RAMP 3	0.00'	1068546.5070	906076.8370		P.C.	CURVE_EX_RAMP_3
6	4+67.90	EXIST. RAMP 3	0.00'	1068545.6336	905959.9777		P.I.	CURVE_EX_RAMP_3
6	5+84.37	EXIST. RAMP 3	0.00'	1068561.3661	905844.1787		P.T.	CURVE_EX_RAMP_3
5	14+26.56	EXIST. RAMP 3	0.00'	1068674.7446	905009.6553		END OF EXIST. BASELINE & INTERSECTION WITH ℄ EXIST. LILAC AVE	
5	0+03.74	EXIST. RAMP 4	0.00'	1068214.4498	904954.7305		BEGINNING OF EXIST. BASELINE & INTERSECTION WITH ℄ EXIST. LILAC AVE	
5	7+09.05	EXIST. RAMP 4	0.00'	1068401.4314	905634.8041		P.C.	CURVE_EX_RAMP_4
5	8+11.52	EXIST. RAMP 4	0.00'	1068428.5969	905733.6079		P.I.	CURVE_EX_RAMP_4
5	9+13.22	EXIST. RAMP 4	0.00'	1068434.1906	905835.9254		P.T.	CURVE_EX_RAMP_4
6	15+63.26	EXIST. RAMP 4	0.00'	1068473.6750	906484.7600		END OF EXIST. BASELINE	
5	8+00.00	EXIST. LILAC AVE	0.00'	1069185.5316	905075.4502		BEGNNING OF EXIST. CENTERLINE	
5	10+05.00	EXIST. LILAC AVE	0.00'	1068982.2114	905049.2603		BEGINNING OF PROJECT	
5	13+15.01	EXIST. LILAC AVE	0.00'	1068674.7446	905009.6553		INTERSECTION WITH ℄ EXIST. RAMP 3	
5	13+16.16	EXIST. LILAC AVE	0.00'	1068673.6040	905009.5084		INTERSECTION WITH ℄ EXIST. RAMP 1	
5	15+49.27	EXIST. LILAC AVE	0.00'	1068442.1364	904981.8518		INTERSECTION WITH ℄ EXIST. I-270	
5	17+78.57	EXIST. LILAC AVE	0.00'	1068214.4498	904954.7305		INTERSECTION WITH ℄ EXIST. RAMP 4	
5	17+80.36	EXIST. LILAC AVE	0.00'	1068212.6724	904954.5188		INTERSECTION WITH ℄ EXIST. RAMP 2	
5	21+40.70	EXIST. LILAC AVE	0.00'	1067854.4917	904915.1002		P.C.	CURVE_EX_LILAC
5	23+20.73	EXIST. LILAC AVE	0.00'	1067675.5373	904895.4304		P.I.	CURVE_EX_LILAC
5	22+59.61	EXIST. LILAC AVE	0.00'	1067736.6929	904898.9921		END OF PROJECT	CURVE_EX_LILAC
5	25+00.00	EXIST. LILAC AVE	0.00'	1067501.9870	904847.5553		P.T., END OF EXIST. CENTERLINE	CURVE_EX_LILAC

COORDINATE POINT SHEET
SHEET 1 OF 1

STATE OF MISSOURI
EUGENE LOUIS KUELKER JR.
NUMBER PE-2010000912
PROFESSIONAL ENGINEER

THIS SHEET HAS BEEN SIGNED, SEALED, AND DATED ELECTRONICALLY.

IF A SEAL IS PRESENT ON THIS SHEET IT HAS BEEN ELECTRONICALLY SEALED AND DATED.

DATE PREPARED: 3/25/2026
ROUTE: I-270 | STATE: MO
DISTRICT: SL | SHEET NO.: 14
COUNTY: ST. LOUIS
JOB NO.: J6I3020D
CONTRACT ID.:
PROJECT NO.:
BRIDGE NO.:

DESCRIPTION	DATE

MISSOURI HIGHWAYS AND TRANSPORTATION COMMISSION
105 WEST CAPITOL
JEFFERSON CITY, MO 65102
1-888-ASK-MODOT (1-888-275-6636)

HDR Engineering, Inc.
1001 Highlands Plaza Drive
Suite 200
St. Louis, MO 63110-1337
314-425-8300
Certificate of Authority: 000856

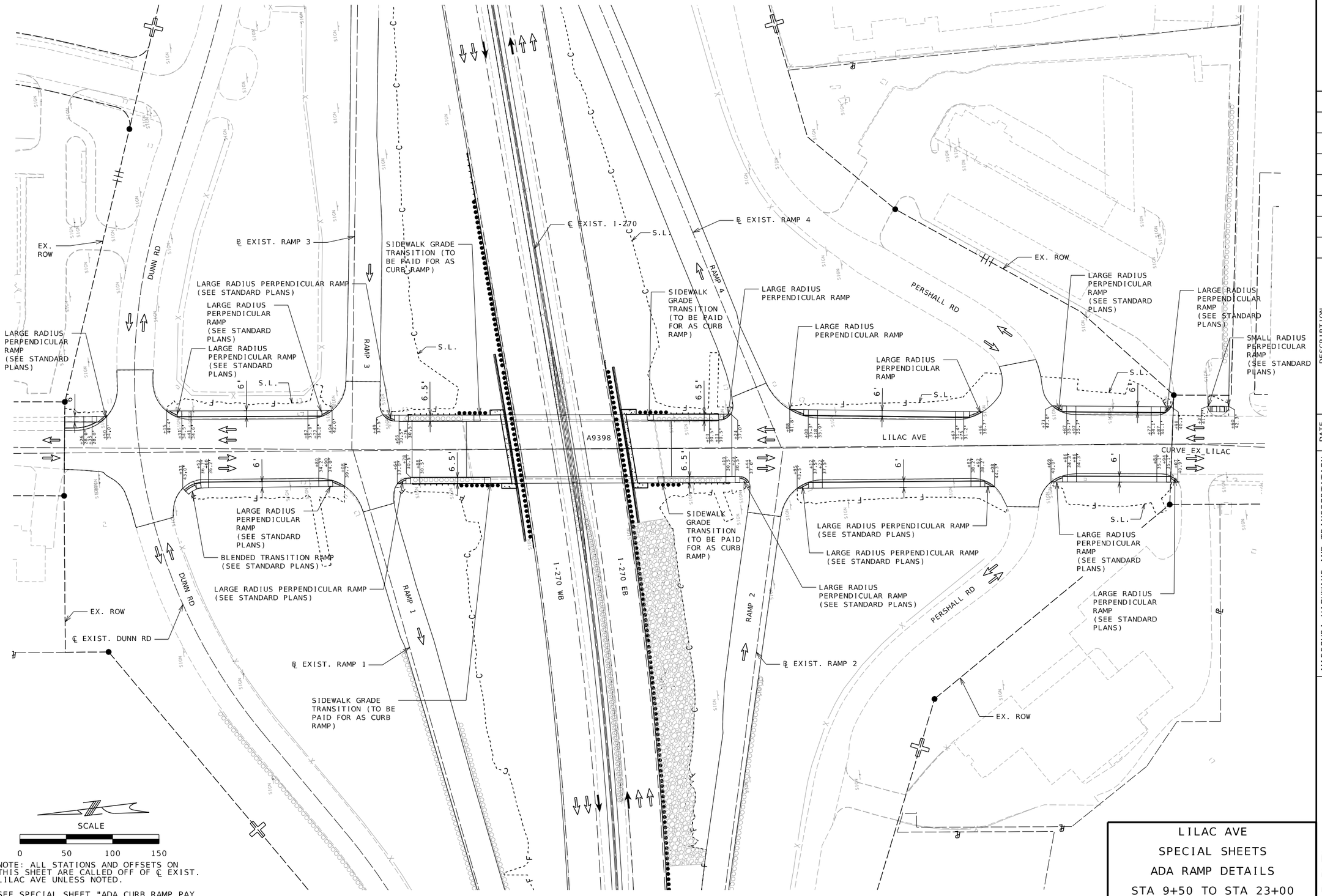

NOTE: ALL STATIONS AND OFFSETS ON THIS SHEET ARE CALLED OFF OF ℄ EXIST. LILAC AVE UNLESS NOTED.

SEE SPECIAL SHEET "ADA CURB RAMP PAY LIMITS" FOR ADDITIONAL DETAILS.

LILAC AVE
SPECIAL SHEETS
ADA RAMP DETAILS
STA 9+50 TO STA 23+00
SHEET 1 OF 1

STATE OF MISSOURI
EUGENE LOUIS KUELKER JR.
NUMBER PE-2010009912
PROFESSIONAL ENGINEER

THIS SHEET HAS BEEN SIGNED, SEALED, AND DATED ELECTRONICALLY.

IF A SEAL IS PRESENT ON THIS SHEET IT HAS BEEN ELECTRONICALLY SEALED AND DATED.

DATE PREPARED: 3/25/2026

ROUTE	STATE
I-270	MO

DISTRICT	SHEET NO.
SL	15

COUNTY: ST. LOUIS

JOB NO.: J6I3020D

CONTRACT ID.:

PROJECT NO.:

BRIDGE NO.:

DATE	DESCRIPTION

MISSOURI HIGHWAYS AND TRANSPORTATION COMMISSION

105 WEST CAPITOL
JEFFERSON CITY, MO 65102
1-888-ASK-MODOT (1-888-275-6636)

HDR Engineering, Inc.
1001 Highlands Plaza Drive
Suite 200
St. Louis, MO 63110-1337
314-425-8300
Certificate of Authority: 000856

PEDESTRIAN CURB RAMP PAY LIMITS

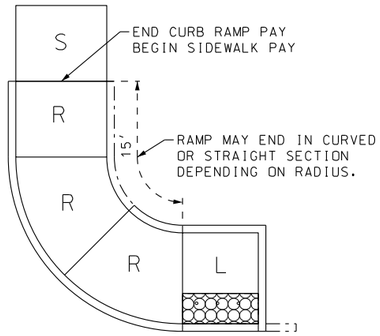

TYPE 1 PARALLEL

THE LENTH OF THIS RAMP SHALL BE MEASURED
ON THE INSIDE/SHORT SIDE OF THE CURVE

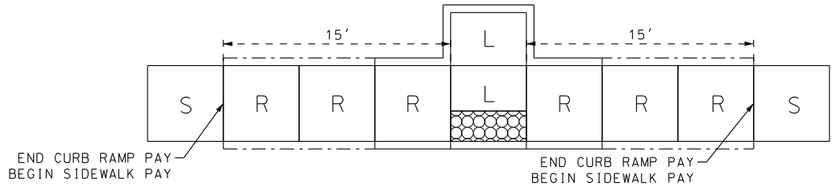

TYPE 2 PARALLEL

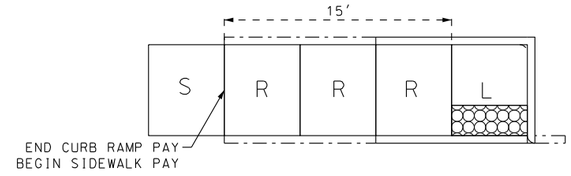

TYPE 3 PARALLEL

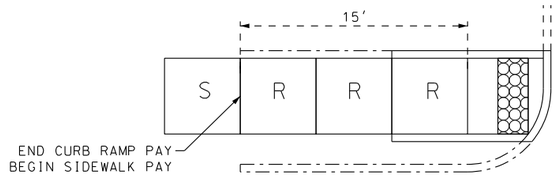

SMALL RADIUS PERPENDICULAR

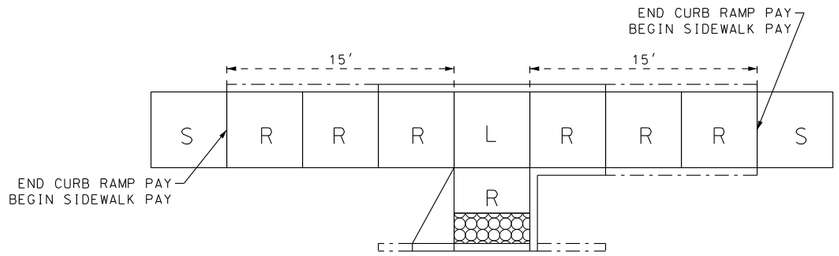

COMPOUND PERPENDICULAR

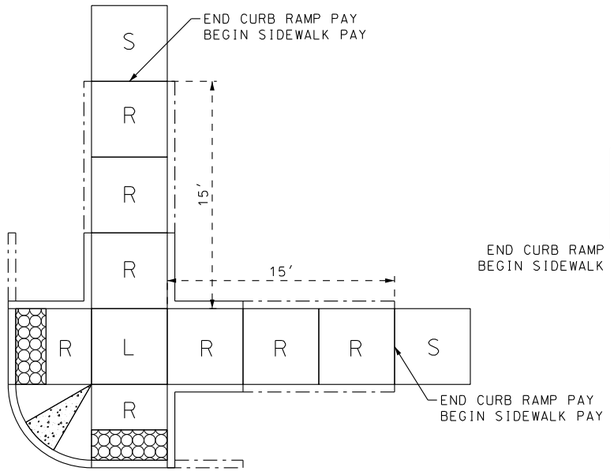

DUAL PERPENDICULAR
PAY AS 2 EACH

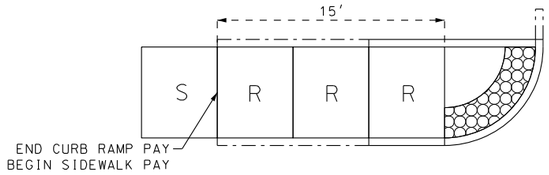

LARGE RADIUS PERPENDICULAR

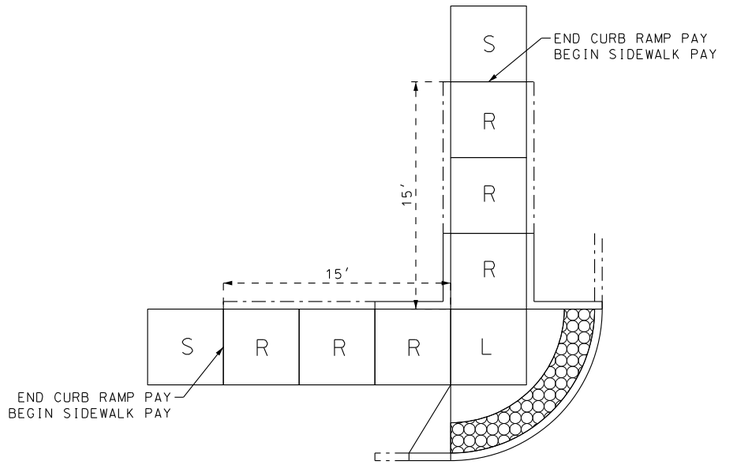

BLENDED TRANSITION
PAY AS 2 EACH

Notes -
15 FEET OF WALKWAY SHALL BE INCLUDED IN CURB RAMP PAY, PER EACH, AS SHOWN.

L - LANDING OR CLEAR AREA FOR TURNING MOVEMENTS AND RESTS.
R - PAY AS RAMP
S - PAY AS SIDEWALK.

SEE JSP FOR OTHER INCIDENTALS INCLUDED IN CURB RAMP PAY.
SEE STANDARD PLANS 608 SERIES FOR DIMENTIONS, GRADES, AND OTHER REQUIREMENTS.
CONTRACTOR WILL HAVE OPTION TO CONSTRUCT RAMP WITH FLARE OR CURB FOR CERTAIN RAMPS ABOVE.

DISCLAIMER
THE PROFESSIONAL WHOSE SIGNATURE AND PERSONAL SEAL APPEAR HEREON ASSUMES RESPONSIBILITY ONLY FOR WHAT APPEARS ON THIS PAGE, AND DISCLAIMS (PURSUANT TO SECTION 327.411 RSMO) SPECIFICATION, ESTIMATES, REPORTS, OR OTHER DOCUMENTS OR INSTRUMENTS NOT SEALED BY THE UNDERSIGNED PROFESSIONAL RELATING TO OR INTENDED TO BE USED FOR ANY PART OR PARTS OF THE PROJECT TO WHICH THIS PAGE REFERS.

SPECIAL SHEETS
ADA CURB RAMP PAY LIMITS
SHEET 1 OF 1

STATE OF MISSOURI
EUGENE LOUIS KUELKER JR.
NUMBER PE-2011000912
PROFESSIONAL ENGINEER

THIS SHEET HAS BEEN SIGNED, SEALED, AND DATED ELECTRONICALLY.

DATE PREPARED 3/25/2026
ROUTE I-270 | STATE MO
DISTRICT SL | SHEET NO. 16
COUNTY ST. LOUIS
JOB NO. J6I3020D
CONTRACT ID.
PROJECT NO.
BRIDGE NO.

DESCRIPTION | DATE

IF A SEAL IS PRESENT ON THIS SHEET IT HAS BEEN ELECTRONICALLY SEALED AND DATED.

MISSOURI HIGHWAYS AND TRANSPORTATION COMMISSION
105 WEST CAPITOL
JEFFERSON CITY, MO 65102
1-888-ASK-MODOT (1-888-275-6636)

HDR Engineering, Inc.
1001 Highlands Plaza Drive
Suite 200
St. Louis, MO 63110-1337
314-425-8300
Certificate of Authority: 000856

c:\pwworking\central01\d4169511\016_SS02_J6I3020D_I1.dgn 12:58:03 PM 3/25/2026

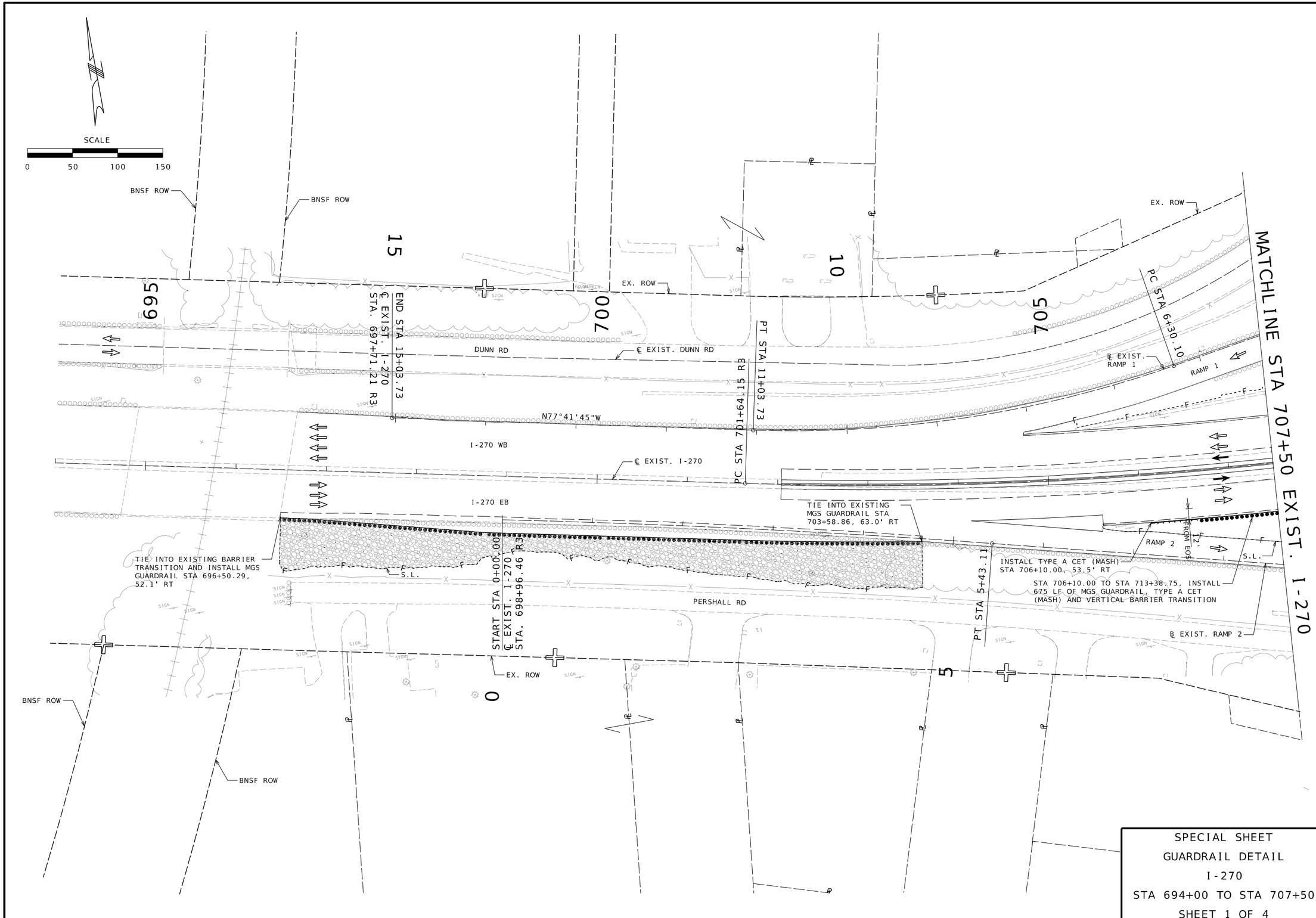

SPECIAL SHEET
GUARDRAIL DETAIL
I-270
STA 694+00 TO STA 707+50
SHEET 1 OF 4

STATE OF MISSOURI
EUGENE LOUIS KUELKER JR.
NUMBER PE-2011000912
PROFESSIONAL ENGINEER

THIS SHEET HAS BEEN SIGNED, SEALED, AND DATED ELECTRONICALLY.

DATE PREPARED 3/25/2026	
ROUTE I-270	STATE MO
DISTRICT SL	SHEET NO. 17
COUNTY ST. LOUIS	
JOB NO. J6I3020D	
CONTRACT ID.	
PROJECT NO.	
BRIDGE NO.	

DATE	DESCRIPTION

MISSOURI HIGHWAYS AND TRANSPORTATION COMMISSION

MoDOT
105 WEST CAPITOL
JEFFERSON CITY, MO 65102
1-888-ASK-MODOT (1-888-275-6636)

HDR Engineering, Inc.
1001 Highlands Plaza Drive
Suite 200
St. Louis, MO 63110-1337
314-425-8300
Certificate of Authority: 000856

IF A SEAL IS PRESENT ON THIS SHEET IT HAS BEEN ELECTRONICALLY SEALED AND DATED.

REV.

c:\pwworking\central01\d4169511\017_SS03_J6I3020D_I50_I-270.dgn 10:32:31 AM 3/25/2026

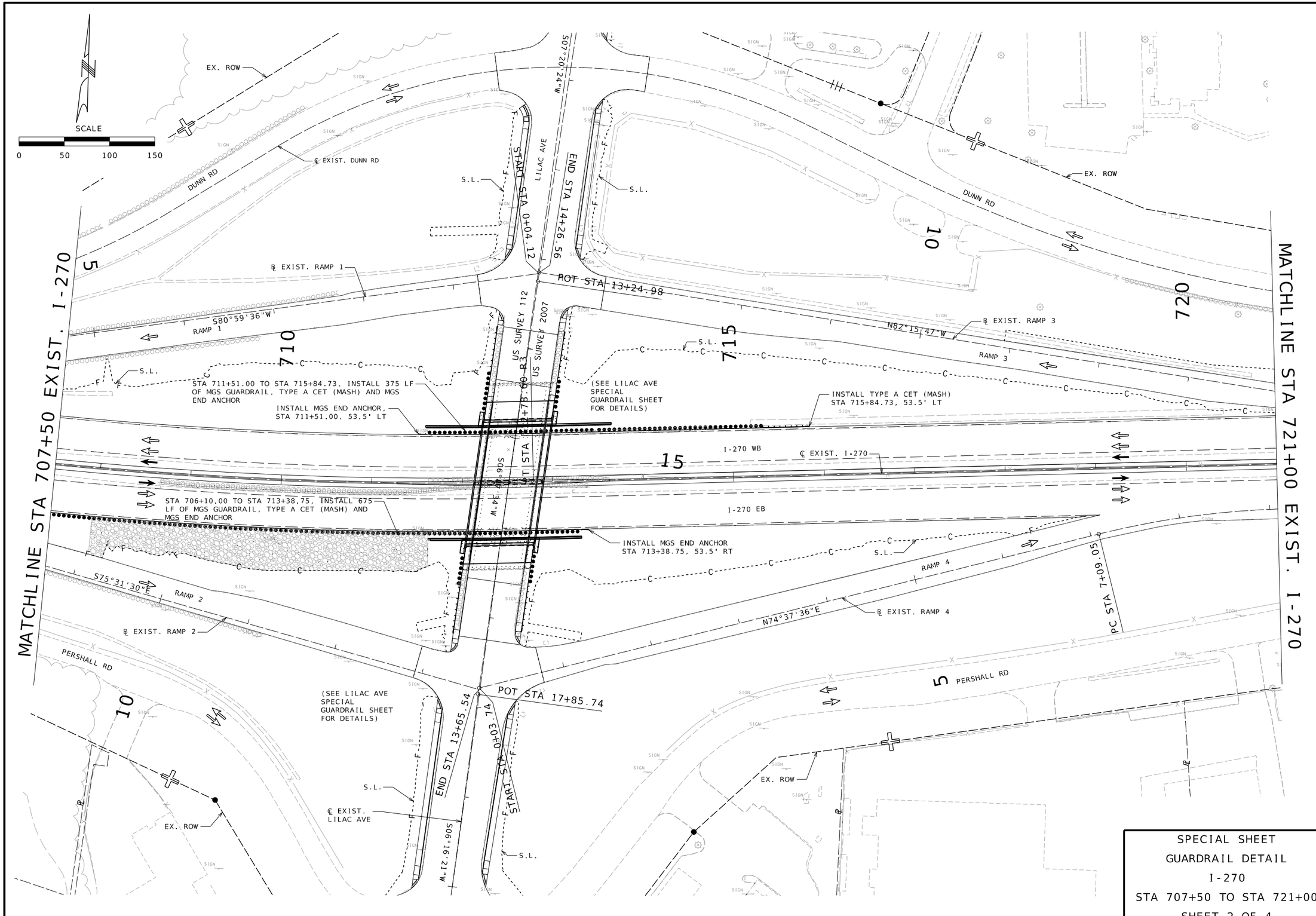

SPECIAL SHEET
GUARDRAIL DETAIL
I-270
STA 707+50 TO STA 721+00
SHEET 2 OF 4

STATE OF MISSOURI
EUGENE LOUIS KUELKER JR.
NUMBER PE-2011000912
PROFESSIONAL ENGINEER

THIS SHEET HAS BEEN SIGNED, SEALED, AND DATED ELECTRONICALLY.

DATE PREPARED	3/25/2026
ROUTE	I-270
STATE	MO
DISTRICT	SL
SHEET NO.	18
COUNTY	ST. LOUIS
JOB NO.	J6I3020D
CONTRACT ID.	
PROJECT NO.	
BRIDGE NO.	

DATE	DESCRIPTION

IF A SEAL IS PRESENT ON THIS SHEET IT HAS BEEN ELECTRONICALLY SEALED AND DATED.

MISSOURI HIGHWAYS AND TRANSPORTATION COMMISSION
MoDOT
105 WEST CAPITOL
JEFFERSON CITY, MO 65102
1-888-ASK-MODOT (1-888-275-6636)

HDR Engineering, Inc.
1001 Highlands Plaza Drive
Suite 200
St. Louis, MO 63110-1337
314-425-8300
Certificate of Authority: 000856

REV.

c:\pwworking\central01\d4169511\018_SS04_J6I3020D_I50_I-270.dgn 10:32:37 AM 3/25/2026

MATCHLINE STA 721+00 EXIST. I-270

MATCHLINE STA 734+50 EXIST. I-270

EX. ROW

STA 730+60.00 TO STA 732+40.00, INSTALL 12.5 LF OF MGS GUARDRAIL, MGS VERTICAL CONCRETE BARRIER TRANSITION, AND TYPE A CET (MASH)

℄ EXIST. DUNN RD

DUNN RD

PT STA 5+84.37

PC STA 3+51.04

START STA 0+00.00
℄ EXIST. I-270
STA. 727+01.04 R3

S.L.

℄ EXIST. RAMP 3

RAMP 3

INSTALL MGS VERTICAL CONCRETE BARRIER TRANSITION, STA 730+60.00, 53.5' LT

INSTALL TYPE A CET (MASH)
STA 732+40.00, 53.5' LT

12' FROM EOS

US SURVEY 2007

S89°34'18"W

I-270 WB

℄ EXIST. I-270

N87°11'37"E

I-270 EB

N86°52'15"E

℄ EXIST. RAMP 4

PT STA 9+13.22

POT STA 13+13.22

N85°57'05"E

℄ EXIST. I-270
STA. 727+54.17 R3

INSTALL TYPE A CET (MASH)
STA 729+45.00, 57.2' RT

STA 729+45.00 TO STA 746+04.76, INSTALL 1600 LF OF MGS GUARDRAIL, TYPE A CET (MASH), AND MGS END ANCHOR

PERSHALL RD

EX. ROW

SCALE
0 50 100 150

SPECIAL SHEET
GUARDRAIL DETAIL
I-270
STA 721+00 TO STA 734+50
SHEET 3 OF 4

STATE OF MISSOURI
EUGENE LOUIS KUEKER JR.
NUMBER PE-2011000912
PROFESSIONAL ENGINEER

THIS SHEET HAS BEEN SIGNED, SEALED, AND DATED ELECTRONICALLY.

IF A SEAL IS PRESENT ON THIS SHEET IT HAS BEEN ELECTRONICALLY SEALED AND DATED.

DATE PREPARED
3/25/2026

ROUTE	STATE
I-270	MO
DISTRICT	SHEET NO.
SL	19

COUNTY
ST. LOUIS

JOB NO.
J6I3020D

CONTRACT ID.

PROJECT NO.

BRIDGE NO.

REV.	DESCRIPTION	DATE

MISSOURI HIGHWAYS AND TRANSPORTATION COMMISSION

105 WEST CAPITOL
JEFFERSON CITY, MO 65102
1-888-ASK-MODOT (1-888-275-6636)

HDR Engineering, Inc.
1001 Highlands Plaza Drive
Suite 200
St. Louis, MO 63110-1337
314-425-8300
Certificate of Authority: 000856

MATCHLINE STA 734+50 EXIST. I-270

735

740

745

EX. ROW

℄ EXIST. DUNN RD

DUNN RD

MGS GUARDRAIL INSTALLATION BY OTHERS (DND)

I-270 WB

℄ EXIST. I-270

I-270 EB

10' FROM EOS

STA 729+45.00 TO STA 746+04.76, INSTALL 1600 LF OF MGS GUARDRAIL, TYPE A CET (MASH) AND MGS END ANCHOR

INSTALL MGS END ANCHOR STA 746+04.76, 56.2' RT

S.L.

PERSHALL RD

EX. ROW

SCALE

0 50 100 150

SPECIAL SHEET

GUARDRAIL DETAIL

I-270

STA 734+50 TO STA 748+00

SHEET 4 OF 4

STATE OF MISSOURI
EUGENE LOUIS KUEKER JR.
NUMBER PE-2010002912
PROFESSIONAL ENGINEER

THIS SHEET HAS BEEN SIGNED, SEALED, AND DATED ELECTRONICALLY.

DATE PREPARED
3/25/2026

ROUTE	STATE
I-270	MO
DISTRICT	SHEET NO.
SL	20

COUNTY
ST. LOUIS

JOB NO.
J6I3020D

CONTRACT ID.

PROJECT NO.

BRIDGE NO.

DESCRIPTION	DATE

IF A SEAL IS PRESENT ON THIS SHEET IT HAS BEEN ELECTRONICALLY SEALED AND DATED.

MISSOURI HIGHWAYS AND TRANSPORTATION COMMISSION

105 WEST CAPITOL
JEFFERSON CITY, MO 65102
1-888-ASK-MODOT (1-888-275-6636)

HDR Engineering, Inc.
1001 Highlands Plaza Drive
Suite 200
St. Louis, MO 63110-1337
314-425-8300
Certificate of Authority: 000856

REV.

c:\pwworking\central01\d4169511\020_SS06_J6I3020D_I50_I-270.dgn 10:32:51 AM 3/25/2026

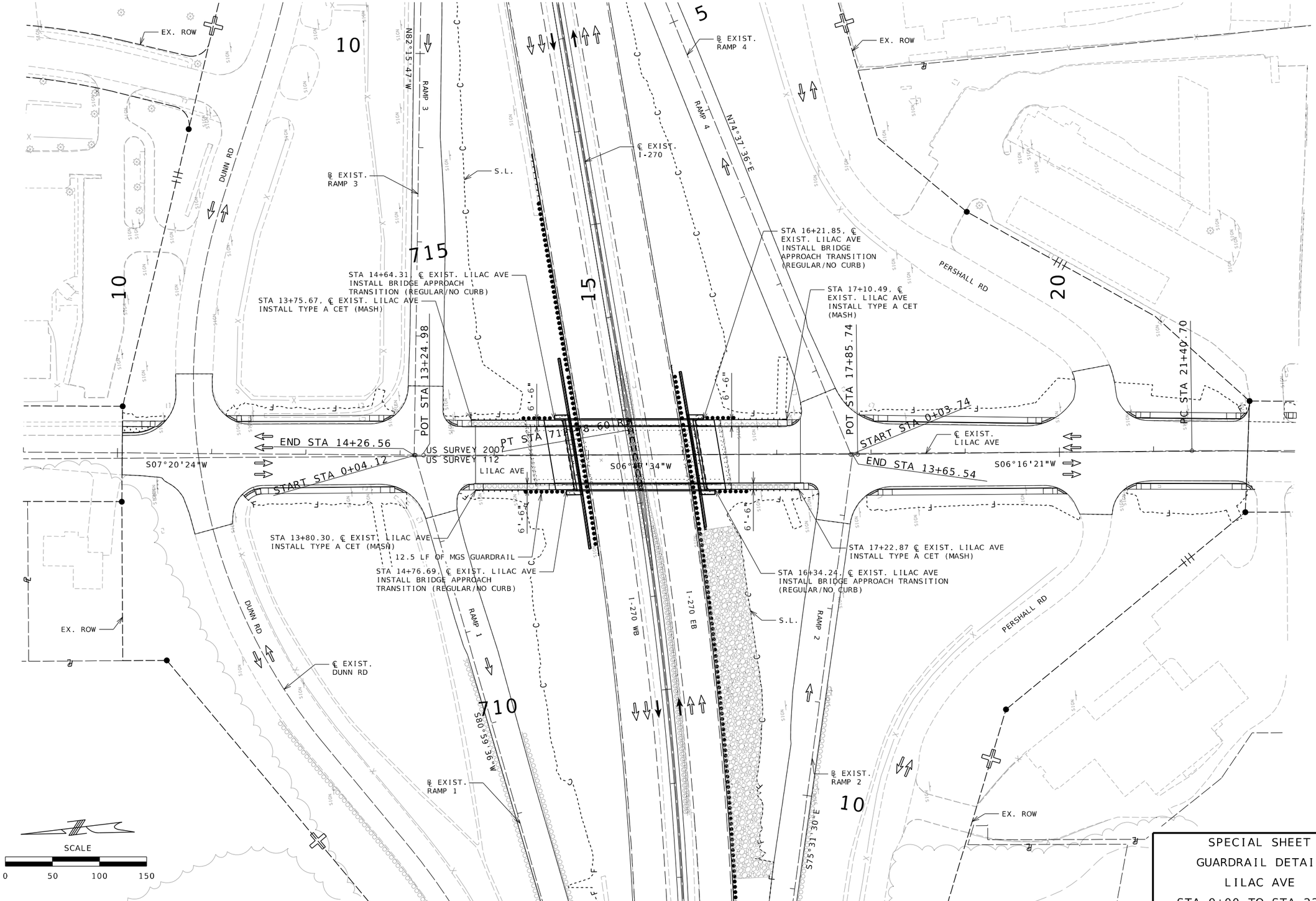

SPECIAL SHEET
GUARDRAIL DETAIL
LILAC AVE
STA 9+00 TO STA 22+00
SHEET 1 OF 1

STATE OF MISSOURI
EUGENE LOUIS KUELKER JR.
NUMBER PE-2010009912
PROFESSIONAL ENGINEER

THIS SHEET HAS BEEN SIGNED, SEALED, AND DATED ELECTRONICALLY.

DATE PREPARED 3/25/2026

ROUTE	STATE
I-270	MO
DISTRICT	SHEET NO.
SL	21

COUNTY: ST. LOUIS
JOB NO.: J6I3020D
CONTRACT ID.:
PROJECT NO.:
BRIDGE NO.:

DESCRIPTION	DATE

MISSOURI HIGHWAYS AND TRANSPORTATION COMMISSION
105 WEST CAPITOL
JEFFERSON CITY, MO 65102
1-888-ASK-MODOT (1-888-275-6636)

HDR Engineering, Inc.
1001 Highlands Plaza Drive
Suite 200
St. Louis, MO 63110-1337
314-425-8300
Certificate of Authority: 000856

IF A SEAL IS PRESENT ON THIS SHEET IT HAS BEEN ELECTRONICALLY SEALED AND DATED.

c:\pwworking\central01\d4169511\021_SS07_J6I3020D_I50_Lilac_Ave.dgn 10:32:59 AM 3/25/2026

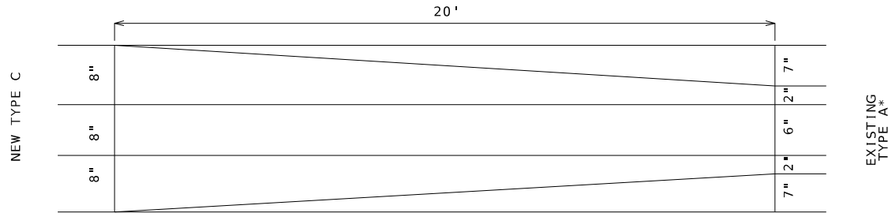

* STANDARD WIDTH SHOWN
MATCH THE EXISTING WIDTH IF DIFFERENT

PLAN VIEW

NOTES:

BAR SPLICES SHALL BE A MINIMUM OF 24 TIMES THE NOMINAL DIAMETER OF THE BAR.

ANY METHOD DEVISED BY THE CONTRACTOR AND APPROVED BY THE ENGINEER THAT WILL ASSURE THE LONGITUDINAL REINFORCING STEEL WILL BE POSITIONED ± 1/2 INCH AS DIMENSIONED WILL BE SATISFACTORY.

THE CONTRACTOR HAS THE OPTION TO SLIP-FORM THE BARRIER. IN WHICH CASE, ADDITIONAL REINFORCEMENT MAY BE TIED TO THE UPPER TWO-THIRDS OF THE REINFORCING CAGE TO PROVIDE BRACING.

SAWED JOINTS SHALL BE LOCATED AT PAVEMENT TRANSVERSE JOINTS.

NOT TO SCALE. FOLLOW DIMENSIONS

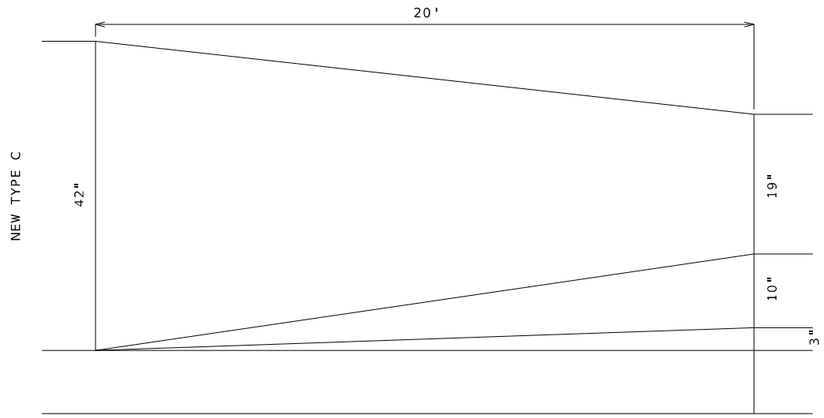

PROFILE VIEW

NOTE: NON-STANDARD BARRIER PAID AS TYPE C (MODIFIED) MEDIAN BARRIER REGARDLESS OF WIDTH OR CONSTRUCTION.

UPSTREAM END SHOWN.
DOWNSTREAM END SIMILAR.

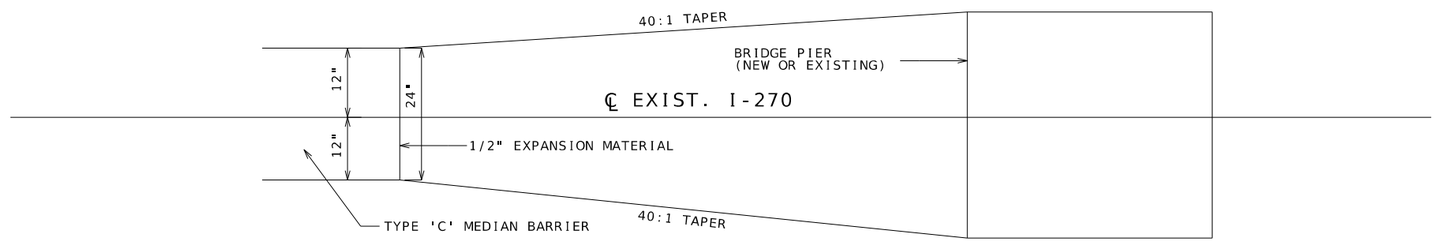

NOT TO SCALE. FOLLOW DIMENSIONS

SPECIAL SHEET
BARRIER TRANSITION
SHEET 1 OF 1

STATE OF MISSOURI
EUGENE LOUIS KUEKER JR.
NUMBER PE-2010000912
PROFESSIONAL ENGINEER

THIS SHEET HAS BEEN SIGNED, SEALED, AND DATED ELECTRONICALLY.

IF A SEAL IS PRESENT ON THIS SHEET IT HAS BEEN ELECTRONICALLY SEALED AND DATED.

DATE PREPARED
3/25/2026

ROUTE	STATE
I-270	MO
DISTRICT	SHEET NO.
SL	22

COUNTY
ST. LOUIS

JOB NO.
J6I3020D

CONTRACT ID.

PROJECT NO.

BRIDGE NO.

DESCRIPTION	DATE

MISSOURI HIGHWAYS AND TRANSPORTATION COMMISSION

105 WEST CAPITOL
JEFFERSON CITY, MO 65102
1-888-ASK-MODOT (1-888-275-6636)

HDR Engineering, Inc.
1001 Highlands Plaza Drive
Suite 200
St. Louis, MO 63110-1337
314-425-8300
Certificate of Authority: 000856

NOT TO SCALE. FOLLOW DIMENSIONS

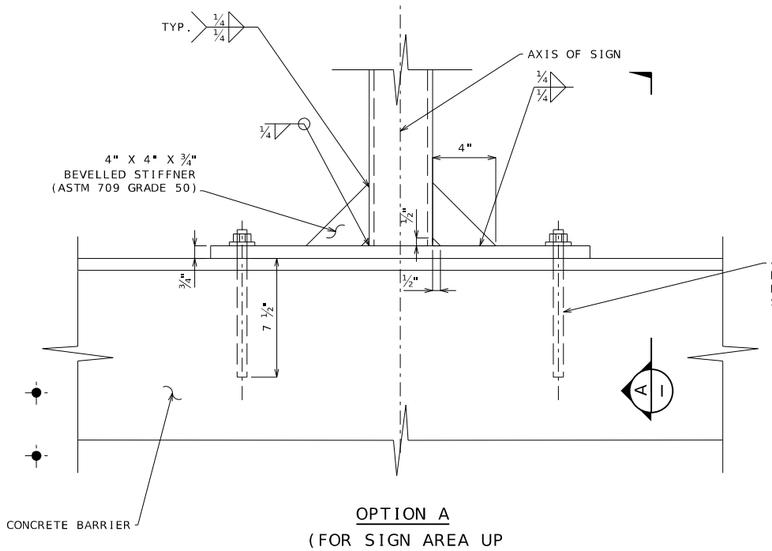

OPTION A
(FOR SIGN AREA UP
TO 35 SQ. FT.)

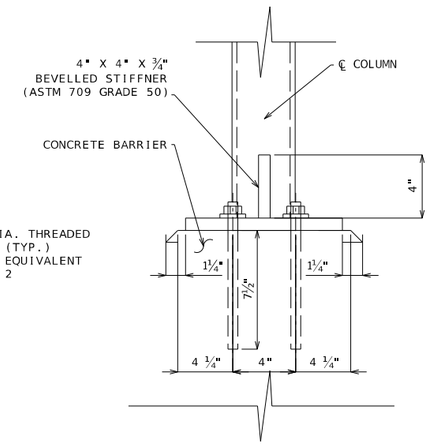

SECTION A

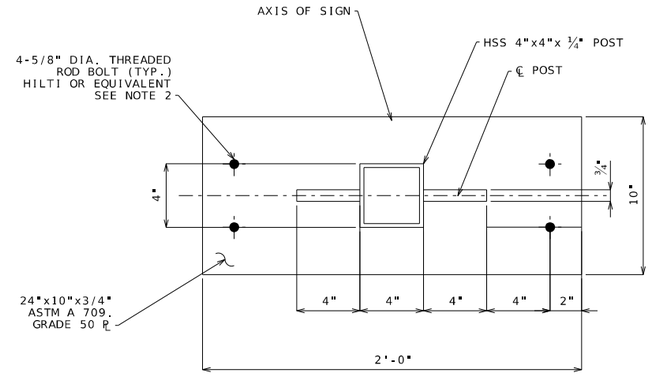

BASE PLATE DETAIL

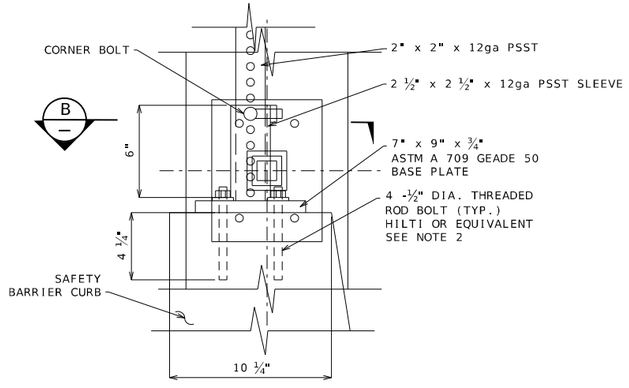

OPTION B
(FOR SIGN AREA UP
TO 12 SQ. FT.)

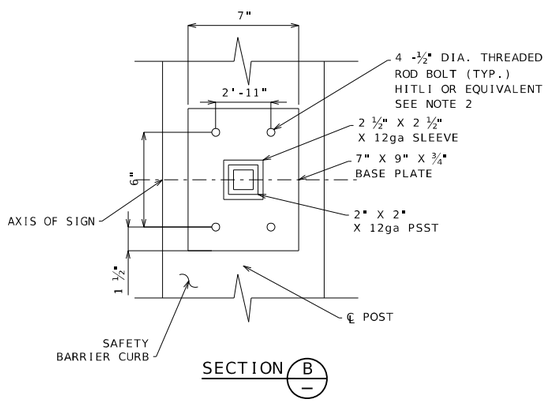

SECTION B

NOTES:

1. THREADED ROD BOLTS SHALL CONFORM TO ASTM F 1554 GRADE 55.
2. HILTI HVA CAPSULE ADHESIVE ANCHORS OR APPROVED EQUAL.
3. CONCRETE IN BARRIER SHALL CONFIRM CLASS B1 (f'c = 4000 PSI).
4. OPTION A DETAIL SHALL BE USED WHEN FENCING IS MOUNTED TO THE TOP OF THE BARRIER. AT THE CONTRACTOR'S OPTION, THE SIGN POST MAY BE MOVED TO THE NEAREST FENCING LINE POST LOCATION AND REPLACE THE LINE POST.
5. LEVELING NUT MAY BE USED IF TOP OF BARRIER IS NOT COMPLETELY LEVEL.

SPECIAL SHEET
SIGN MOUNTED ON BARRIER
SHEET 1 OF 1

STATE OF MISSOURI
EUGENE LOUIS KUEKER JR.
NUMBER PE-2010000912
PROFESSIONAL ENGINEER

THIS SHEET HAS BEEN SIGNED, SEALED, AND DATED ELECTRONICALLY.

IF A SEAL IS PRESENT ON THIS SHEET IT HAS BEEN ELECTRONICALLY SEALED AND DATED.

DATE PREPARED: 3/25/2026
ROUTE: I-270 | STATE: MO
DISTRICT: SL | SHEET NO.: 23
COUNTY: ST. LOUIS
JOB NO.: J6I3020D
CONTRACT ID.:
PROJECT NO.:
BRIDGE NO.:

DESCRIPTION	DATE

MISSOURI HIGHWAYS AND TRANSPORTATION COMMISSION
105 WEST CAPITOL
JEFFERSON CITY, MO 65102
1-888-ASK-MODOT (1-888-275-6636)

HDR Engineering, Inc.
1001 Highlands Plaza Drive
Suite 200
St. Louis, MO 63110-1337
314-425-8300
Certificate of Authority: 000856

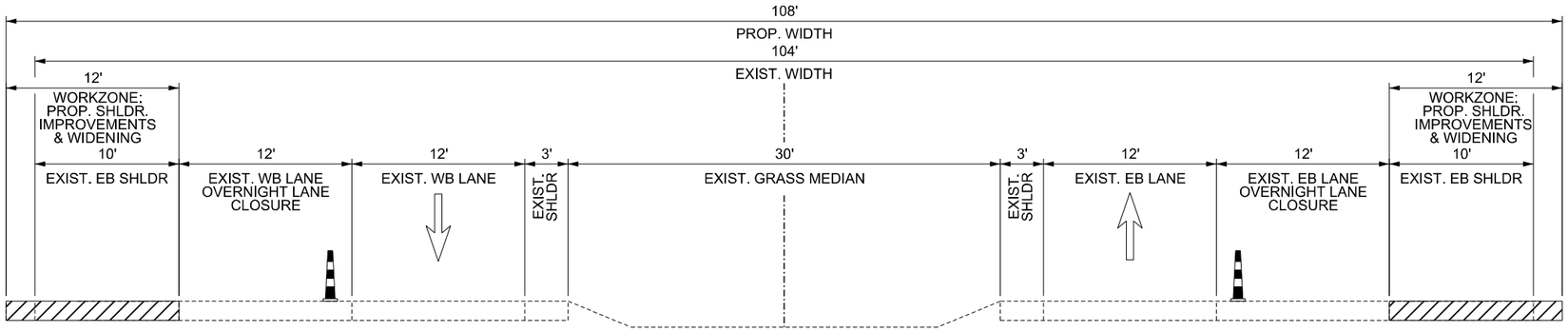

MOT TYPICAL SECTIONS - PHASE 0

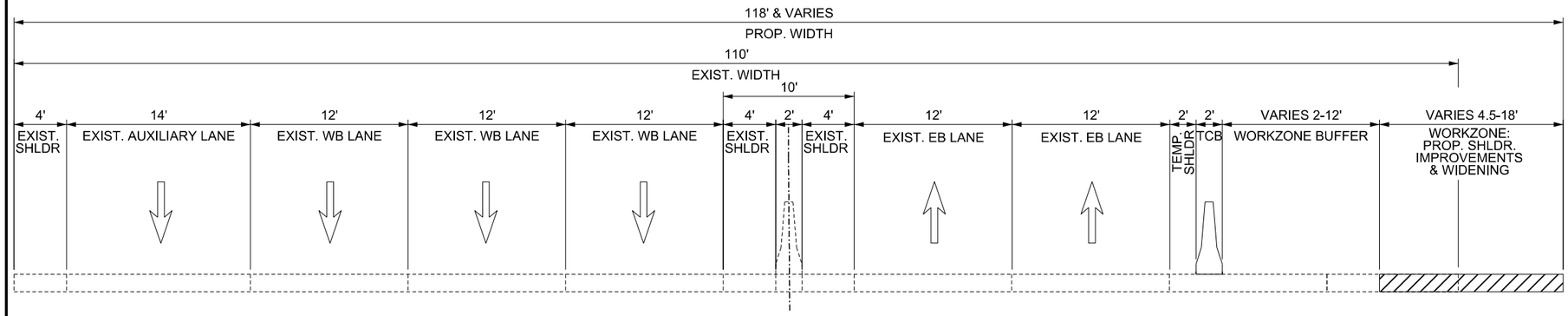

MOT TYPICAL SECTIONS - PHASE 1

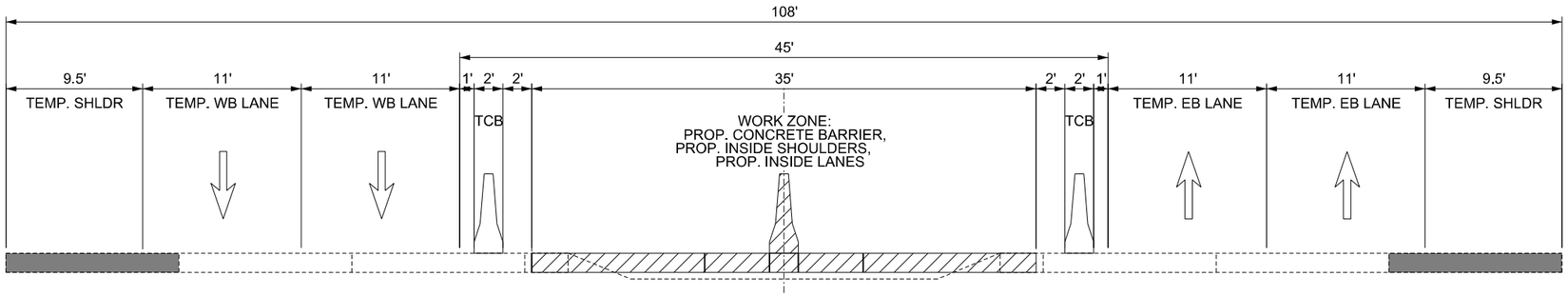

MOT TYPICAL SECTIONS - PHASE 3

LEGEND

- WORK ZONE
- PREVIOUSLY CONSTRUCTED
- TEMPORARY CONCRETE BARRIER (TCB)
- DIRECTION OF TRAFFIC

TRAFFIC CONTROL PLAN
TYPICAL SECTIONS
SHEET 1 OF 1

STATE OF MISSOURI
JONATHAN R. LOOS
NUMBER PE-2017000326
PROFESSIONAL ENGINEER

DATE PREPARED	3/20/2026
ROUTE	I-270
STATE	MO
DISTRICT	STL
SHEET NO.	24
COUNTY	ST. LOUIS
JOB NO.	J6I3020D
CONTRACT ID.	
PROJECT NO.	
BRIDGE NO.	

DESCRIPTION

DATE

MISSOURI HIGHWAYS AND TRANSPORTATION COMMISSION

MoDOT

105 WEST CAPITOL
JEFFERSON CITY, MO 65102
1-888-ASK-MODOT (1-888-275-6636)

HORNER SHIFRIN

401 S. 18TH ST., STE. 400 ST. LOUIS, MO 63103
314-531-4321 - FAX 314-531-6966
WWW.HORNERSHIFRIN.COM
DISCIPLINE: PROFESSIONAL ENGINEERING
CERTIFICATE OF AUTHORITY: 000159
EXPIRATION DATE: DECEMBER 31, 2026

IF A SEAL IS PRESENT ON THIS SHEET IT HAS BEEN ELECTRONICALLY SEALED AND DATED.

REV.

...\J6I3020D MOT\TC Typical Sheets 12:37:41 PM 3/20/2026

GENERAL TRAFFIC CONTROL NOTES:

1. ANY EXISTING GROUND-MOUNTED SIGN THAT CONFLICTS WITH THE TRAFFIC CONTROL SIGNING SHALL BE COMPLETELY COVERED OR REMOVED AT NO DIRECT PAY. COVERING OF EXISTING OVERHEAD SIGNS SHALL BE AS NOTED IN THE PLANS AND PAID FOR UNDER BID ITEM "COVER EXISTING OVERHEAD SIGN".

2. PLACEMENT OF TRAFFIC CONTROL SIGNS ARE APPROXIMATE AND MAY BE ADJUSTED TO FIT FIELD CONDITIONS AS APPROVED BY THE ENGINEER.

3. SIGN AND DEVICE LOCATIONS SHALL BE FIELD VERIFIED AND APPROVED BY THE ENGINEER.

4. NO DIRECT PAY WILL BE MADE FOR THE RELOCATION OR TEMPORARY MOUNTING OF EXISTING SIGNS DISPLACED BY THE TEMPORARY WIDENING. METHOD OF TEMPORARY MOUNTING AND LOCATION OF THESE SIGNS TO BE APPROVED BY THE ENGINEER.

DISCLAIMER

THE PROFESSIONAL WHOSE SIGNATURE AND PERSONAL SEAL APPEAR HEREON ASSUMES RESPONSIBILITY ONLY FOR WHAT APPEARS ON THIS PAGE, AND DISCLAIMS (PURSUANT TO SECTION 327.411 RSMO) SPECIFICATION, ESTIMATES, REPORTS, OR OTHER DOCUMENTS OR INSTRUMENTS NOT SEALED BY THE UNDERSIGNED PROFESSIONAL RELATING TO OR INTENDED TO BE USED FOR ANY PART OR PARTS OF THE PROJECT TO WHICH THIS PAGE REFERS.

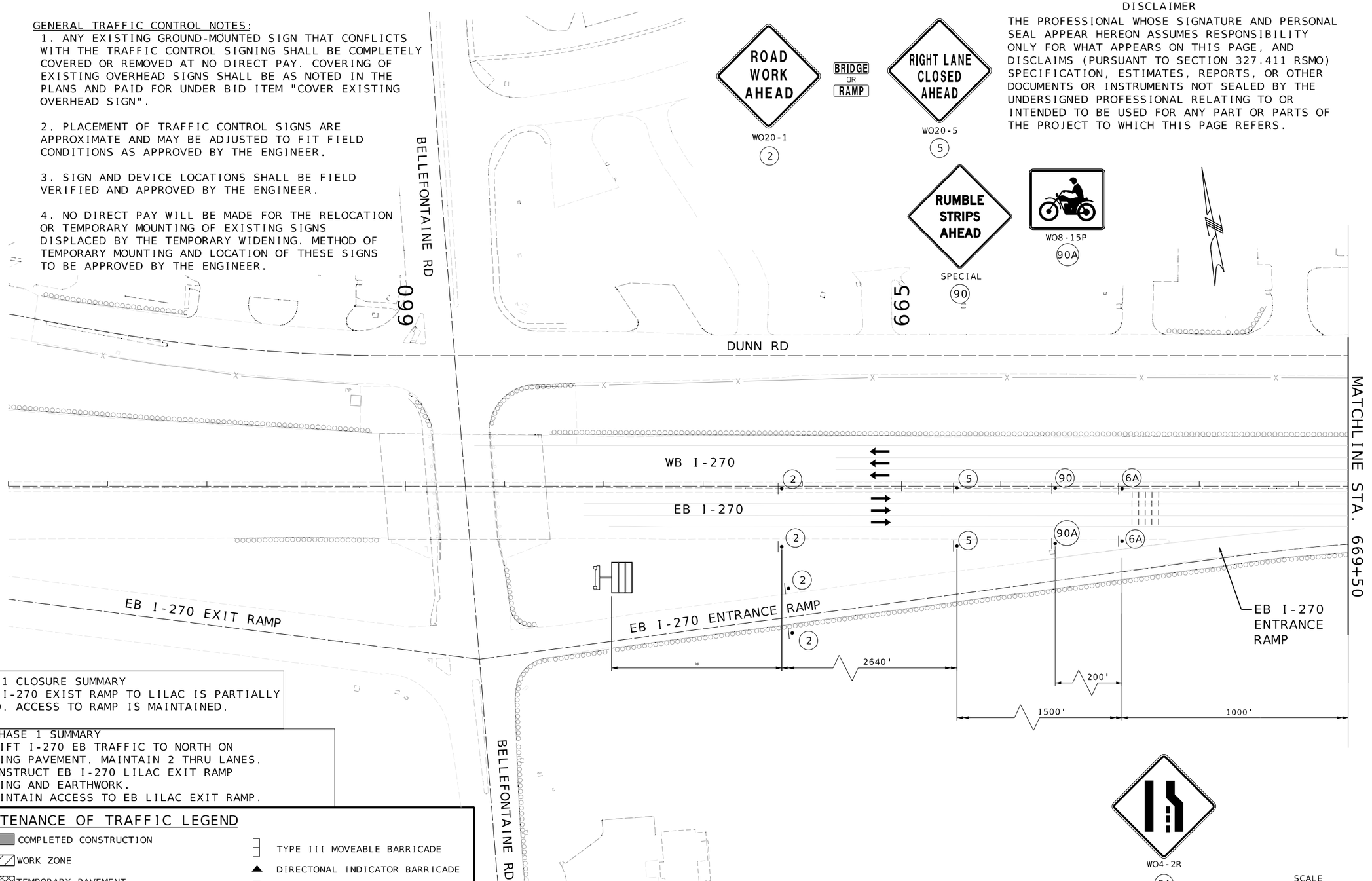

PHASE 1 CLOSURE SUMMARY

1. EB I-270 EXIST RAMP TO LILAC IS PARTIALLY CLOSED. ACCESS TO RAMP IS MAINTAINED.

MOT PHASE 1 SUMMARY

1. SHIFT I-270 EB TRAFFIC TO NORTH ON EXISTING PAVEMENT. MAINTAIN 2 THRU LANES.
2. CONSTRUCT EB I-270 LILAC EXIT RAMP WIDENING AND EARTHWORK.
3. MAINTAIN ACCESS TO EB LILAC EXIT RAMP.

MAINTENANCE OF TRAFFIC LEGEND

- COMPLETED CONSTRUCTION
- WORK ZONE
- TEMPORARY PAVEMENT
- TEMPORARY PAVEMENT PLACED IN PREVIOUS STAGE
- TEMPORARY PAVEMENT TO BE REMOVED IN CURRENT STAGE
- TRAFFIC FLOW
- TEMPORARY LONG-TERM RUMBLE STRIP
- TYPE III MOVEABLE BARRICADE
- DIRECTONAL INDICATOR BARRICADE
- CHANNELIZER
- SIGN (SINGLE SIDED)
- CHANGEABLE MESSAGE SIGN *EXACT LOCATION AND MESSAGE OF CMS TO BE APPROVED BY THE ENGINEER
- FLASHING ARROW PANEL

STRIPING NOTES

1. 4-INCH TEMPRARY PAVEMENT MARKING PAINT, WHITE, SOLID
2. 4-INCH TEMPORARY PAVEMENT MARKING PAINT, WHITE, 10' DASH 30' SKIP
3. 4-INCH TEMPORARY PAVEMENT MARKING PAINT, WHITE, DOTTED
4. 4-INCH TEMPORARY PAVEMENT MARKING PAINT, YELLOW, SOLID

SCALE

0 50 100 150

TRAFFIC CONTROL PLAN
PHASE 1
SHEET 1 OF 4

STATE OF MISSOURI
JONATHAN R. LODS
NUMBER PE-2017000326
PROFESSIONAL ENGINEER

DATE PREPARED	5/1/2026
ROUTE	I-270
STATE	MO
DISTRICT	STL
SHEET NO.	25
COUNTY	ST. LOUIS
JOB NO.	J6I3020D
CONTRACT ID.	.
PROJECT NO.	.
BRIDGE NO.	.

DATE	DESCRIPTION
.	.

IF A SEAL IS PRESENT ON THIS SHEET IT HAS BEEN ELECTRONICALLY SEALED AND DATED.

MISSOURI HIGHWAYS AND TRANSPORTATION COMMISSION

MoDOT

105 WEST CAPITOL
JEFFERSON CITY, MO 65102
1-888-ASK-MODOT (1-888-275-6636)

HORNER SHIFRIN

401 S. 18TH ST., STE. 400 ST. LOUIS, MO 63103
314-531-4321 • FAX 314-531-6966
WWW.HORNERSHIFRIN.COM
DISCIPLINE: PROFESSIONAL ENGINEERING
CERTIFICATE OF AUTHORITY: 000159
EXPIRATION DATE: DECEMBER 31, 2026

...\MOT Phase 1 Sheets 10:57:41 AM 5/1/2026

DISCLAIMER

THE PROFESSIONAL WHOSE SIGNATURE AND PERSONAL SEAL APPEAR HEREON ASSUMES RESPONSIBILITY ONLY FOR WHAT APPEARS ON THIS PAGE, AND DISCLAIMS (PURSUANT TO SECTION 327.411 RSMO) SPECIFICATION, ESTIMATES, REPORTS, OR OTHER DOCUMENTS OR INSTRUMENTS NOT SEALED BY THE UNDERSIGNED PROFESSIONAL RELATING TO OR INTENDED TO BE USED FOR ANY PART OR PARTS OF THE PROJECT TO WHICH THIS PAGE REFERS.

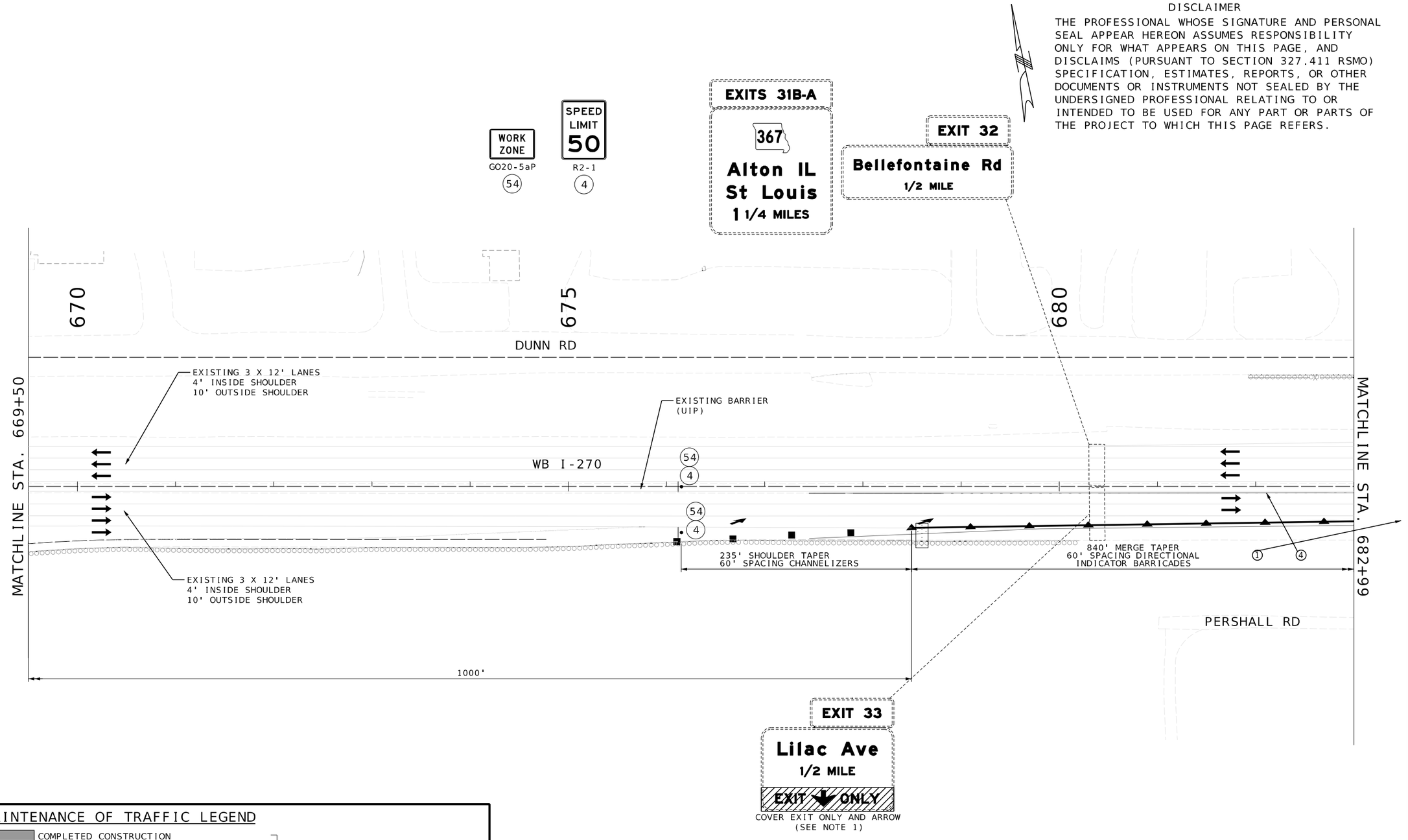

MAINTENANCE OF TRAFFIC LEGEND

- COMPLETED CONSTRUCTION
- WORK ZONE
- TEMPORARY PAVEMENT
- TEMPORARY PAVEMENT PLACED IN PREVIOUS STAGE
- TEMPORARY PAVEMENT TO BE REMOVED IN CURRENT STAGE
- TRAFFIC FLOW
- TEMPORARY LONG-TERM RUMBLE STRIP
- TYPE III MOVEABLE BARRICADE
- DIRECTONAL INDICATOR BARRICADE
- CHANNELIZER
- SIGN (SINGLE SIDED)
- CHANGEABLE MESSAGE SIGN
- FLASHING ARROW PANEL

STRIPING NOTES

1. 4-INCH TEMPRARY PAVEMENT MARKING PAINT, WHITE, SOLID
2. 4-INCH TEMPORARY PAVEMENT MARKING PAINT, WHITE, 10' DASH 30' SKIP
3. 4-INCH TEMPORARY PAVEMENT MARKING PAINT, WHITE, DOTTED
4. 4-INCH TEMPORARY PAVEMENT MARKING PAINT, YELLOW, SOLID

SCALE
0 50 100 150

TRAFFIC CONTROL PLAN
PHASE 1
SHEET 2 OF 4

STATE OF MISSOURI
JONATHAN R. LOOS
NUMBER PE-2017000326
PROFESSIONAL ENGINEER

DATE PREPARED 3/20/2026	
ROUTE I-270	STATE MO
DISTRICT STL	SHEET NO. 26
COUNTY ST. LOUIS	
JOB NO. J6I3020D	
CONTRACT ID.	
PROJECT NO.	
BRIDGE NO.	

DATE	DESCRIPTION

MISSOURI HIGHWAYS AND TRANSPORTATION COMMISSION
105 WEST CAPITOL
JEFFERSON CITY, MO 65102
1-888-ASK-MODOT (1-888-275-6636)

HORNER SHIFRIN
401 S. 18TH ST., STE. 400 ST. LOUIS, MO 63103
314-531-4321 - FAX 314-531-6966
WWW.HORNERSHIFRIN.COM
DISCIPLINE: PROFESSIONAL ENGINEERING
CERTIFICATE OF AUTHORITY: 000159
EXPIRATION DATE: DECEMBER 31, 2026

IF A SEAL IS PRESENT ON THIS SHEET IT HAS BEEN ELECTRONICALLY SEALED AND DATED.

REV.

...\MOT Phase 1 Sheets 12:38:02 PM 3/20/2026

DISCLAIMER

THE PROFESSIONAL WHOSE SIGNATURE AND PERSONAL SEAL APPEAR HEREON ASSUMES RESPONSIBILITY ONLY FOR WHAT APPEARS ON THIS PAGE, AND DISCLAIMS (PURSUANT TO SECTION 327.411 RSMO) SPECIFICATION, ESTIMATES, REPORTS, OR OTHER DOCUMENTS OR INSTRUMENTS NOT SEALED BY THE UNDERSIGNED PROFESSIONAL RELATING TO OR INTENDED TO BE USED FOR ANY PART OR PARTS OF THE PROJECT TO WHICH THIS PAGE REFERS.

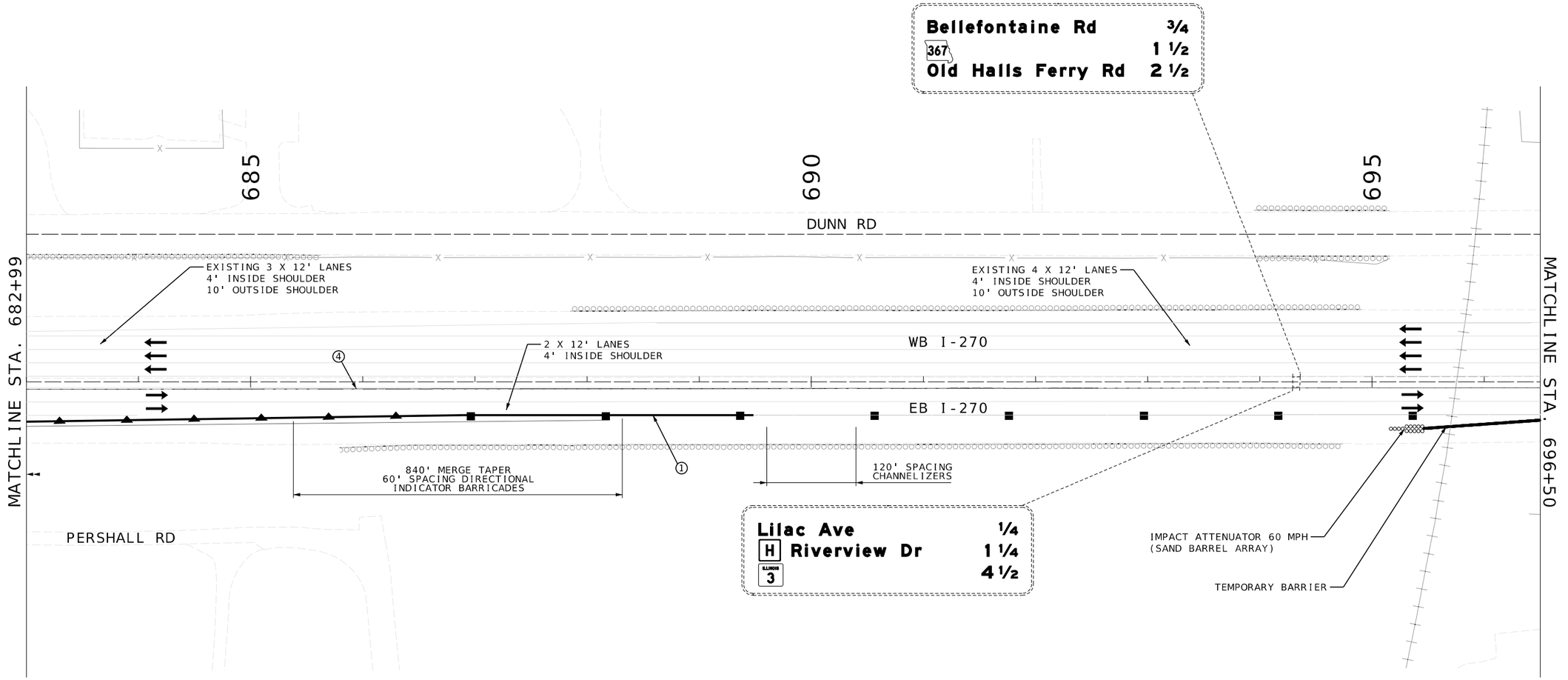

MAINTENANCE OF TRAFFIC LEGEND

- COMPLETED CONSTRUCTION
- WORK ZONE
- TEMPORARY PAVEMENT
- TEMPORARY PAVEMENT PLACED IN PREVIOUS STAGE
- TEMPORARY PAVEMENT TO BE REMOVED IN CURRENT STAGE
- TRAFFIC FLOW
- TEMPORARY LONG-TERM RUMBLE STRIP
- TYPE III MOVEABLE BARRICADE
- DIRECTONAL INDICATOR BARRICADE
- CHANNELIZER
- SIGN (SINGLE SIDED)
- CHANGEABLE MESSAGE SIGN
- FLASHING ARROW PANEL

STRIPING NOTES

1. 4-INCH TEMPRARY PAVEMENT MARKING PAINT, WHITE, SOLID
2. 4-INCH TEMPORARY PAVEMENT MARKING PAINT, WHITE, 10' DASH 30' SKIP
3. 4-INCH TEMPORARY PAVEMENT MARKING PAINT, WHITE, DOTTED
4. 4-INCH TEMPORARY PAVEMENT MARKING PAINT, YELLOW, SOLID

SCALE

0 50 100 150

TRAFFIC CONTROL PLAN
PHASE 1
SHEET 3 OF 4

STATE OF MISSOURI
JONATHAN R. LOOS
NUMBER PE-2017000326
PROFESSIONAL ENGINEER

DATE PREPARED	3/20/2026
ROUTE	I-270
STATE	MO
DISTRICT	STL
SHEET NO.	27
COUNTY	ST. LOUIS
JOB NO.	J6I3020D
CONTRACT ID.	
PROJECT NO.	
BRIDGE NO.	

DATE	DESCRIPTION

MISSOURI HIGHWAYS AND TRANSPORTATION COMMISSION

MoDOT

105 WEST CAPITOL
JEFFERSON CITY, MO 65102
1-888-ASK-MODOT (1-888-275-6636)

HORNER SHIFRIN

401 S. 18TH ST., STE. 400 ST. LOUIS, MO 63103
314-531-4321 - FAX 314-531-6966
WWW.HORNERSHIFRIN.COM
DISCIPLINE: PROFESSIONAL ENGINEERING
CERTIFICATE OF AUTHORITY: 000159
EXPIRATION DATE: DECEMBER 31, 2026

IF A SEAL IS PRESENT ON THIS SHEET IT HAS BEEN ELECTRONICALLY SEALED AND DATED.

REV.

...\MOT Phase 1 Sheets 12:38:03 PM 3/20/2026

DISCLAIMER

THE PROFESSIONAL WHOSE SIGNATURE AND PERSONAL SEAL APPEAR HEREON ASSUMES RESPONSIBILITY ONLY FOR WHAT APPEARS ON THIS PAGE, AND DISCLAIMS (PURSUANT TO SECTION 327.411 RSMO) SPECIFICATION, ESTIMATES, REPORTS, OR OTHER DOCUMENTS OR INSTRUMENTS NOT SEALED BY THE UNDERSIGNED PROFESSIONAL RELATING TO OR INTENDED TO BE USED FOR ANY PART OR PARTS OF THE PROJECT TO WHICH THIS PAGE REFERS.

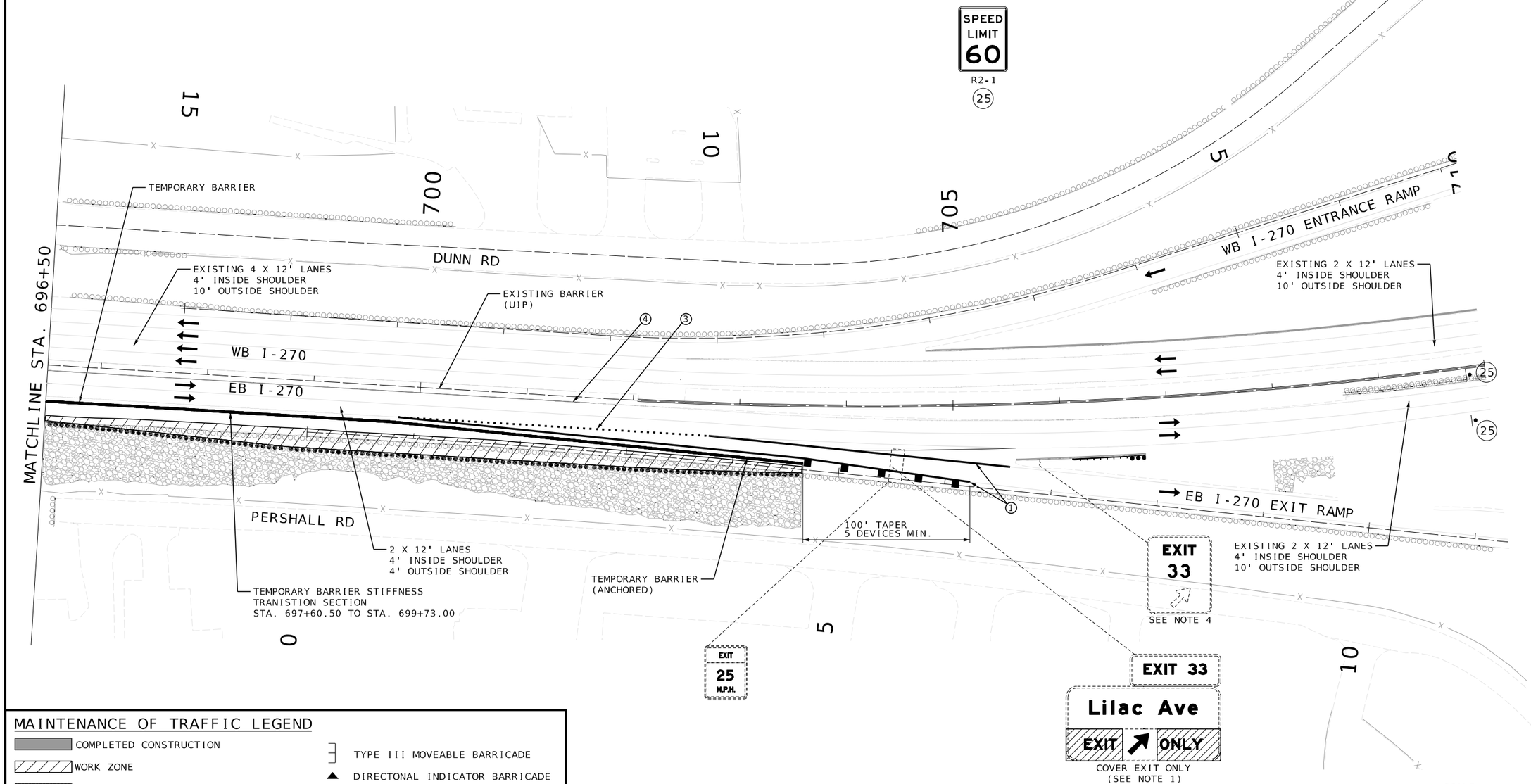

MAINTENANCE OF TRAFFIC LEGEND

- COMPLETED CONSTRUCTION
- WORK ZONE
- TEMPORARY PAVEMENT
- TEMPORARY PAVEMENT PLACED IN PREVIOUS STAGE
- TEMPORARY PAVEMENT TO BE REMOVED IN CURRENT STAGE
- TRAFFIC FLOW
- TEMPORARY LONG-TERM RUMBLE STRIP
- TYPE III MOVEABLE BARRICADE
- DIRECTONAL INDICATOR BARRICADE
- CHANNELIZER
- SIGN (SINGLE SIDED)
- CHANGEABLE MESSAGE SIGN
- FLASHING ARROW PANEL

STRIPING NOTES

1. 4-INCH TEMPRARY PAVEMENT MARKING PAINT, WHITE, SOLID
2. 4-INCH TEMPORARY PAVEMENT MARKING PAINT, WHITE, 10' DASH 30' SKIP
3. 4-INCH TEMPORARY PAVEMENT MARKING PAINT, WHITE, DOTTED
4. 4-INCH TEMPORARY PAVEMENT MARKING PAINT, YELLOW, SOLID

SCALE
0 50 100 150

TRAFFIC CONTROL PLAN
PHASE 1
SHEET 4 OF 4

STATE OF MISSOURI
JONATHAN R. LODS
NUMBER PE-2017000326
PROFESSIONAL ENGINEER

DATE PREPARED 3/20/2026
ROUTE I-270 | STATE MO
DISTRICT STL | SHEET NO. 28
COUNTY ST. LOUIS
JOB NO. J6I3020D
CONTRACT ID.
PROJECT NO.
BRIDGE NO.

DESCRIPTION | DATE

IF A SEAL IS PRESENT ON THIS SHEET IT HAS BEEN ELECTRONICALLY SEALED AND DATED.

MISSOURI HIGHWAYS AND TRANSPORTATION COMMISSION
105 WEST CAPITOL
JEFFERSON CITY, MO 65102
1-888-ASK-MODOT (1-888-275-6636)

HORNER SHIFRIN
401 S. 18TH ST., STE. 400 ST. LOUIS, MO 63103
314-241-1976 FAX 314-241-1988
WWW.HORNERSHIFRIN.COM
DISCIPLINE: PROFESSIONAL ENGINEERING
CERTIFICATE OF AUTHORITY: 000159
EXPIRATION DATE: DECEMBER 31, 2026

REV.

...\MOT Phase 1 Sheets 12:38:04 PM 3/20/2026

GENERAL TRAFFIC CONTROL NOTES:

1. ANY EXISTING GROUND-MOUNTED SIGN THAT CONFLICTS WITH THE TRAFFIC CONTROL SIGNING SHALL BE COMPLETELY COVERED OR REMOVED AT NO DIRECT PAY. COVERING OF EXISTING OVERHEAD SIGNS SHALL BE AS NOTED IN THE PLANS AND PAID FOR UNDER BID ITEM "COVER EXISTING OVERHEAD SIGN".

2. PLACEMENT OF TRAFFIC CONTROL SIGNS ARE APPROXIMATE AND MAY BE ADJUSTED TO FIT FIELD CONDITIONS AS APPROVED BY THE ENGINEER.

3. SIGN AND DEVICE LOCATIONS SHALL BE FIELD VERIFIED AND APPROVED BY THE ENGINEER.

4. NO DIRECT PAY WILL BE MADE FOR THE RELOCATION OR TEMPORARY MOUNTING OF EXISTING SIGNS DISPLACED BY THE TEMPORARY WIDENING. METHOD OF TEMPORARY MOUNTING AND LOCATION OF THESE SIGNS TO BE APPROVED BY THE ENGINEER.

DISCLAIMER

THE PROFESSIONAL WHOSE SIGNATURE AND PERSONAL SEAL APPEAR HEREON ASSUMES RESPONSIBILITY ONLY FOR WHAT APPEARS ON THIS PAGE, AND DISCLAIMS (PURSUANT TO SECTION 327.411 RSMO) SPECIFICATION, ESTIMATES, REPORTS, OR OTHER DOCUMENTS OR INSTRUMENTS NOT SEALED BY THE UNDERSIGNED PROFESSIONAL RELATING TO OR INTENDED TO BE USED FOR ANY PART OR PARTS OF THE PROJECT TO WHICH THIS PAGE REFERS.

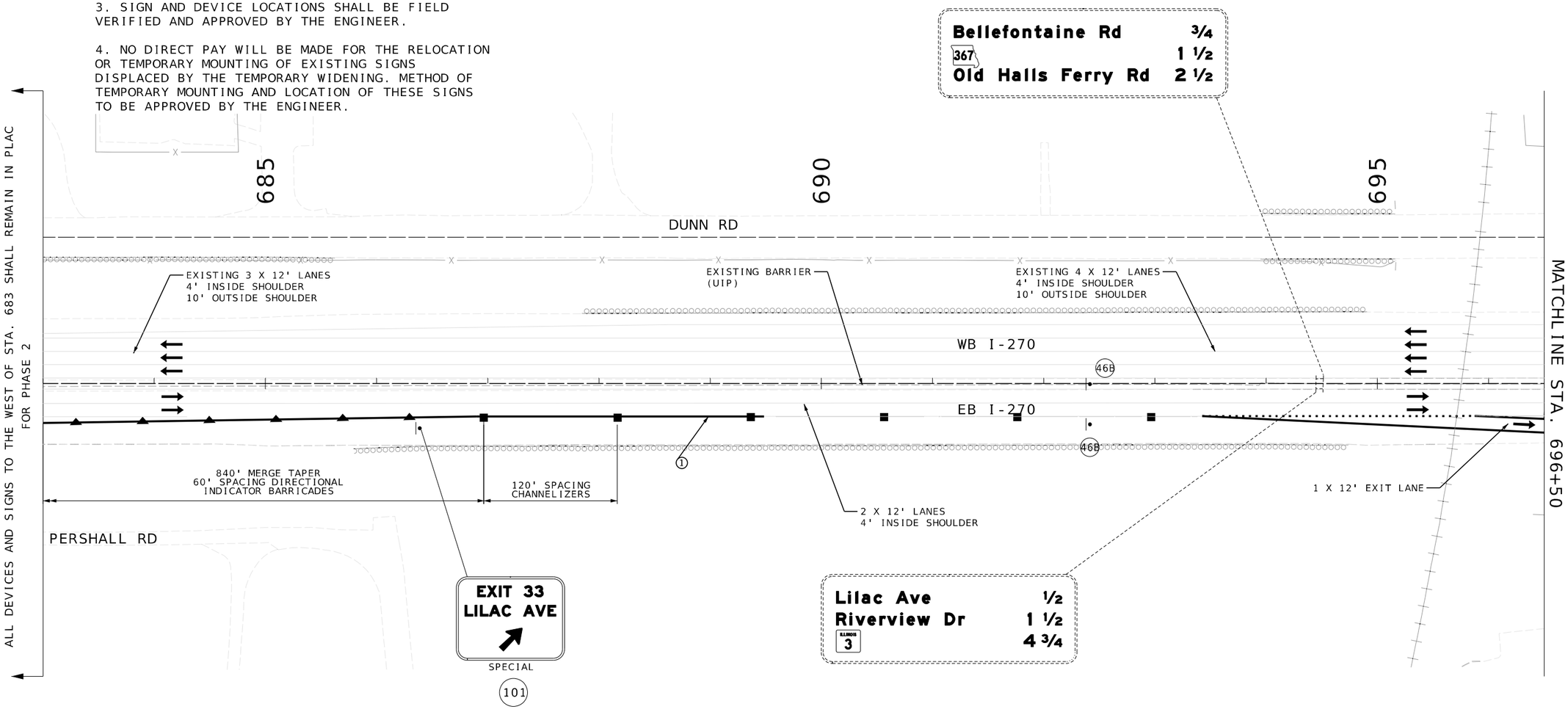

MAINTENANCE OF TRAFFIC LEGEND

- COMPLETED CONSTRUCTION
- WORK ZONE
- TEMPORARY PAVEMENT
- TEMPORARY PAVEMENT PLACED IN PREVIOUS STAGE
- TEMPORARY PAVEMENT TO BE REMOVED IN CURRENT STAGE
- TRAFFIC FLOW
- TEMPORARY LONG-TERM RUMBLE STRIP
- TYPE III MOVEABLE BARRICADE
- DIRECTONAL INDICATOR BARRICADE
- CHANNELIZER
- SIGN (SINGLE SIDED)
- CHANGEABLE MESSAGE SIGN
- FLASHING ARROW PANEL

STRIPING NOTES

1. 4-INCH TEMPRARY PAVEMENT MARKING PAINT, WHITE, SOLID
2. 4-INCH TEMPORARY PAVEMENT MARKING PAINT, WHITE, 10' DASH 30' SKIP
3. 4-INCH TEMPORARY PAVEMENT MARKING PAINT, WHITE, DOTTED
4. 4-INCH TEMPORARY PAVEMENT MARKING PAINT, YELLOW, SOLID

SCALE

0 50 100 150

TRAFFIC CONTROL PLAN
PHASE 2
SHEET 1 OF 2

STATE OF MISSOURI
JONATHAN R. LODS
NUMBER PE-2017000326
PROFESSIONAL ENGINEER

DATE PREPARED	3/20/2026
ROUTE	I-270
STATE	MO
DISTRICT	STL
SHEET NO.	29
COUNTY	ST. LOUIS
JOB NO.	J6I3020D
CONTRACT ID.	
PROJECT NO.	
BRIDGE NO.	

DESCRIPTION

DATE

MISSOURI HIGHWAYS AND TRANSPORTATION COMMISSION

MoDOT

105 WEST CAPITOL
JEFFERSON CITY, MO 65102
1-888-ASK-MODOT (1-888-275-6636)

HORNER SHIFRIN

401 S. 18TH ST., STE. 400 ST. LOUIS, MO 63103
314-531-4321 - FAX 314-531-6966
WWW.HORNERSHIFRIN.COM
DISCIPLINE: PROFESSIONAL ENGINEERING
CERTIFICATE OF AUTHORITY: 000159
EXPIRATION DATE: DECEMBER 31, 2026

IF A SEAL IS PRESENT ON THIS SHEET IT HAS BEEN ELECTRONICALLY SEALED AND DATED.

REV.

...\MOT Phase 2 Sheets 12:38:16 PM 3/20/2026

DISCLAIMER

THE PROFESSIONAL WHOSE SIGNATURE AND PERSONAL SEAL APPEAR HEREON ASSUMES RESPONSIBILITY ONLY FOR WHAT APPEARS ON THIS PAGE, AND DISCLAIMS (PURSUANT TO SECTION 327.411 RSMO) SPECIFICATION, ESTIMATES, REPORTS, OR OTHER DOCUMENTS OR INSTRUMENTS NOT SEALED BY THE UNDERSIGNED PROFESSIONAL RELATING TO OR INTENDED TO BE USED FOR ANY PART OR PARTS OF THE PROJECT TO WHICH THIS PAGE REFERS.

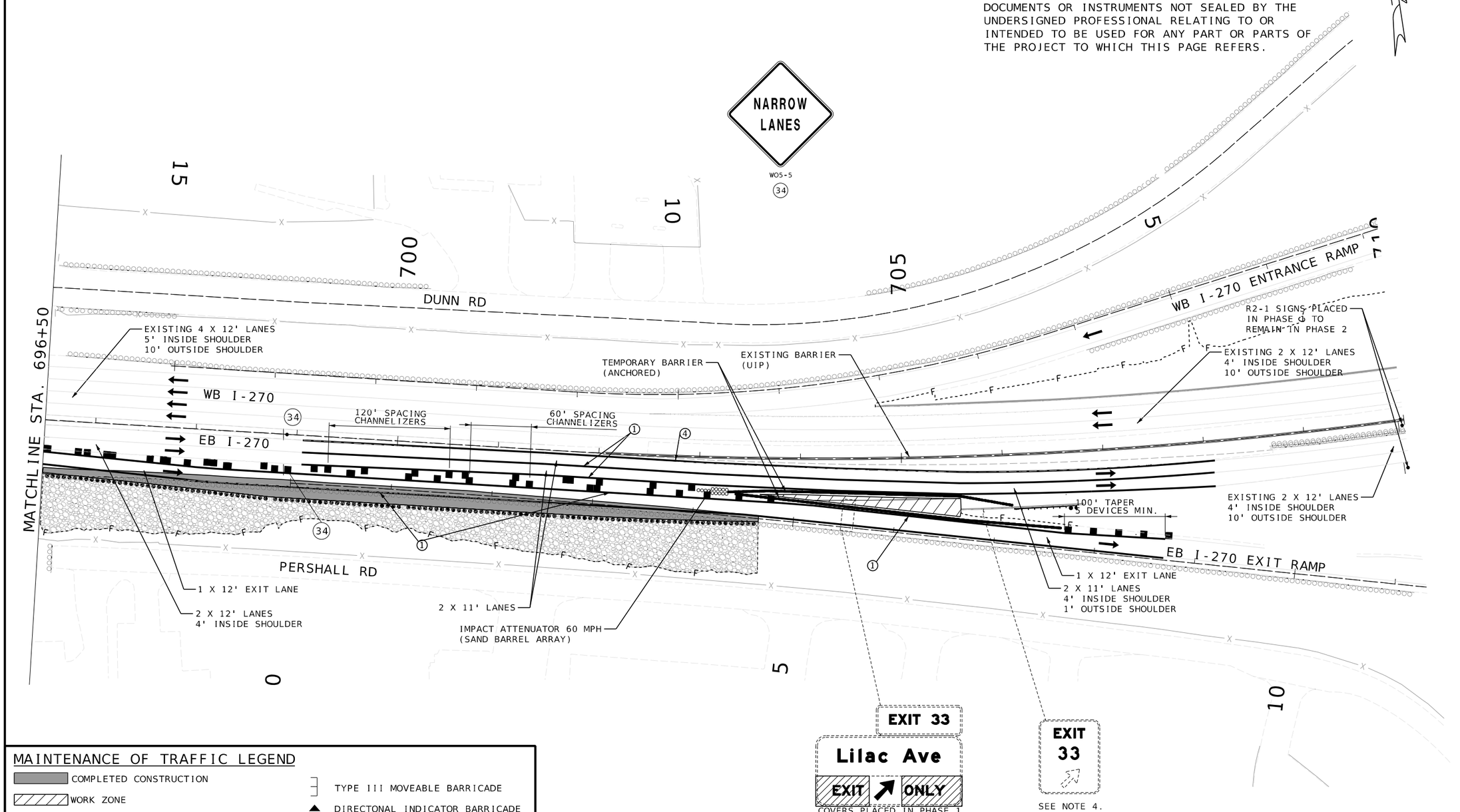

MAINTENANCE OF TRAFFIC LEGEND

- COMPLETED CONSTRUCTION
- WORK ZONE
- TEMPORARY PAVEMENT
- TEMPORARY PAVEMENT PLACED IN PREVIOUS STAGE
- TEMPORARY PAVEMENT TO BE REMOVED IN CURRENT STAGE
- TRAFFIC FLOW
- TEMPORARY LONG-TERM RUMBLE STRIP
- TYPE III MOVEABLE BARRICADE
- DIRECTONAL INDICATOR BARRICADE
- CHANNELIZER
- SIGN (SINGLE SIDED)
- CHANGEABLE MESSAGE SIGN
- FLASHING ARROW PANEL

STRIPING NOTES

1. 4-INCH TEMPRARY PAVEMENT MARKING PAINT, WHITE, SOLID
2. 4-INCH TEMPORARY PAVEMENT MARKING PAINT, WHITE, 10' DASH 30' SKIP
3. 4-INCH TEMPORARY PAVEMENT MARKING PAINT, WHITE, DOTTED
4. 4-INCH TEMPORARY PAVEMENT MARKING PAINT, YELLOW, SOLID

SCALE

0 50 100 150

TRAFFIC CONTROL PLAN
PHASE 2
SHEET 2 OF 2

STATE OF MISSOURI
JONATHAN R. LODS
NUMBER PE-2017000326
PROFESSIONAL ENGINEER

DATE PREPARED	
3/20/2026	
ROUTE I-270	STATE MO
DISTRICT STL	SHEET NO. 30
COUNTY ST. LOUIS	
JOB NO. J6I3020D	
CONTRACT ID.	
PROJECT NO.	
BRIDGE NO.	

DATE	DESCRIPTION

IF A SEAL IS PRESENT ON THIS SHEET IT HAS BEEN ELECTRONICALLY SEALED AND DATED.

MISSOURI HIGHWAYS AND TRANSPORTATION COMMISSION

MoDOT

105 WEST CAPITOL
JEFFERSON CITY, MO 65102
1-888-ASK-MODOT (1-888-275-6636)

HORNER SHIFRIN

401 S. 18TH ST., STE. 400 ST. LOUIS, MO 63103
314-531-4321 - FAX 314-531-6966
WWW.HORNERSHIFRIN.COM
DISCIPLINE: PROFESSIONAL ENGINEERING
CERTIFICATE OF AUTHORITY: 000159
EXPIRATION DATE: DECEMBER 31, 2026

REV.

...\MOT Phase 2 Sheets 12:38:17 PM 3/20/2026

GENERAL TRAFFIC CONTROL NOTES:

1. ANY EXISTING GROUND-MOUNTED SIGN THAT CONFLICTS WITH THE TRAFFIC CONTROL SIGNING SHALL BE COMPLETELY COVERED OR REMOVED AT NO DIRECT PAY. COVERING OF EXISTING OVERHEAD SIGNS SHALL BE AS NOTED IN THE PLANS AND PAID FOR AS EACH UNDER BID ITEM "COVER EXISTING OVERHEAD SIGN".

2. PLACEMENT OF TRAFFIC CONTROL SIGNS ARE APPROXIMATE AND MAY BE ADJUSTED TO FIT FIELD CONDITIONS AS APPROVED BY THE ENGINEER.

3. SIGN AND DEVICE LOCATIONS SHALL BE FIELD VERIFIED AND APPROVED BY THE ENGINEER.

4. NO DIRECT PAY WILL BE MADE FOR THE RELOCATION OR TEMPORARY MOUNTING OF EXISTING SIGNS DISPLACED BY THE TEMPORARY WIDENING. METHOD OF TEMPORARY MOUNTING AND LOCATION OF THESE SIGNS TO BE APPROVED BY THE ENGINEER.

DISCLAIMER

THE PROFESSIONAL WHOSE SIGNATURE AND PERSONAL SEAL APPEAR HEREON ASSUMES RESPONSIBILITY ONLY FOR WHAT APPEARS ON THIS PAGE, AND DISCLAIMS (PURSUANT TO SECTION 327.411 RSMO) SPECIFICATION, ESTIMATES, REPORTS, OR OTHER DOCUMENTS OR INSTRUMENTS NOT SEALED BY THE UNDERSIGNED PROFESSIONAL RELATING TO OR INTENDED TO BE USED FOR ANY PART OR PARTS OF THE PROJECT TO WHICH THIS PAGE REFERS.

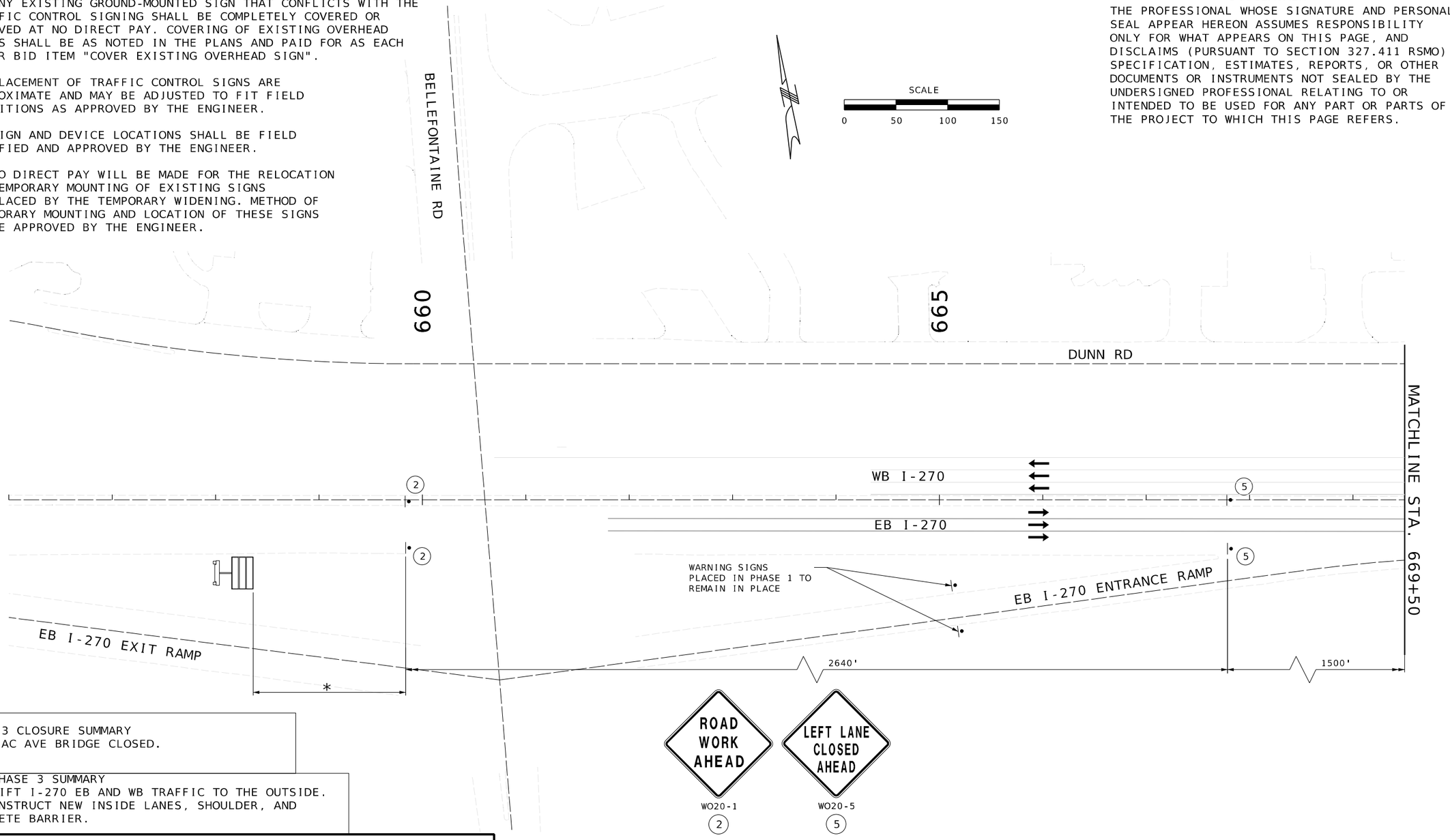

PHASE 3 CLOSURE SUMMARY
1. LILAC AVE BRIDGE CLOSED.

MOT PHASE 3 SUMMARY
1. SHIFT I-270 EB AND WB TRAFFIC TO THE OUTSIDE.
2. CONSTRUCT NEW INSIDE LANES, SHOULDER, AND CONCRETE BARRIER.

MAINTENANCE OF TRAFFIC LEGEND

- COMPLETED CONSTRUCTION
- WORK ZONE
- TEMPORARY PAVEMENT
- TEMPORARY PAVEMENT PLACED IN PREVIOUS STAGE
- TEMPORARY PAVEMENT TO BE REMOVED IN CURRENT STAGE
- TRAFFIC FLOW
- TEMPORARY LONG-TERM RUMBLE STRIP
- TYPE III MOVEABLE BARRICADE
- DIRECTONAL INDICATOR BARRICADE
- CHANNELIZER
- SIGN (SINGLE SIDED)
- CHANGEABLE MESSAGE SIGN
  * EXACT LOCATION AND MESSAGE OF CMS TO BE APPROVED BY THE ENGINEER
- FLASHING ARROW PANEL

STRIPING NOTES

1. 4-INCH TEMPRARY PAVEMENT MARKING PAINT, WHITE, SOLID
2. 4-INCH TEMPORARY PAVEMENT MARKING PAINT, WHITE, 10' DASH 30' SKIP
3. 4-INCH TEMPORARY PAVEMENT MARKING PAINT, WHITE, DOTTED
4. 4-INCH TEMPORARY PAVEMENT MARKING PAINT, YELLOW, SOLID

TRAFFIC CONTROL PLAN
PHASE 3
SHEET 1 OF 9

STATE OF MISSOURI
JONATHAN R. LODS
NUMBER PE-2017000326
PROFESSIONAL ENGINEER

DATE PREPARED	3/20/2026
ROUTE	I-270
STATE	MO
DISTRICT	STL
SHEET NO.	31
COUNTY	ST. LOUIS
JOB NO.	J6I3020D
CONTRACT ID.	.
PROJECT NO.	.
BRIDGE NO.	.

DATE	DESCRIPTION
.	.

MISSOURI HIGHWAYS AND TRANSPORTATION COMMISSION
MoDOT
105 WEST CAPITOL
JEFFERSON CITY, MO 65102
1-888-ASK-MODOT (1-888-275-6636)

HORNER SHIFRIN
401 S. 18TH ST., STE. 400 ST. LOUIS, MO 63103
314-531-4321 - FAX 314-531-6966
WWW.HORNERSHIFRIN.COM
DISCIPLINE: PROFESSIONAL ENGINEERING
CERTIFICATE OF AUTHORITY: 000159
EXPIRATION DATE: DECEMBER 31, 2026

IF A SEAL IS PRESENT ON THIS SHEET IT HAS BEEN ELECTRONICALLY SEALED AND DATED.

...\MOT Phase 3 Sheets 12:38:26 PM 3/20/2026

DISCLAIMER

THE PROFESSIONAL WHOSE SIGNATURE AND PERSONAL SEAL APPEAR HEREON ASSUMES RESPONSIBILITY ONLY FOR WHAT APPEARS ON THIS PAGE, AND DISCLAIMS (PURSUANT TO SECTION 327.411 RSMO) SPECIFICATION, ESTIMATES, REPORTS, OR OTHER DOCUMENTS OR INSTRUMENTS NOT SEALED BY THE UNDERSIGNED PROFESSIONAL RELATING TO OR INTENDED TO BE USED FOR ANY PART OR PARTS OF THE PROJECT TO WHICH THIS PAGE REFERS.

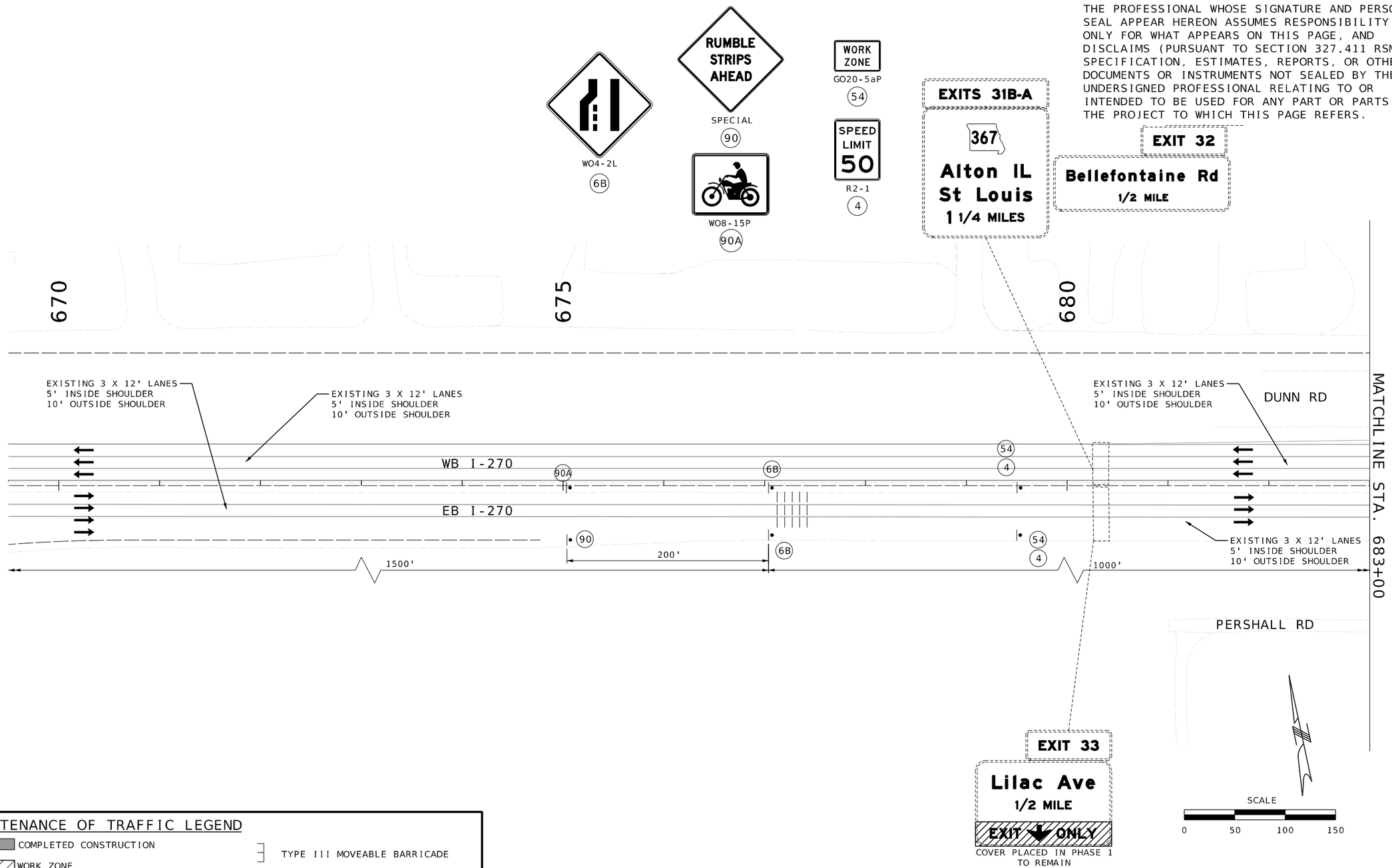

MAINTENANCE OF TRAFFIC LEGEND

- COMPLETED CONSTRUCTION
- WORK ZONE
- TEMPORARY PAVEMENT
- TEMPORARY PAVEMENT PLACED IN PREVIOUS STAGE
- TEMPORARY PAVEMENT TO BE REMOVED IN CURRENT STAGE
- TRAFFIC FLOW
- TEMPORARY LONG-TERM RUMBLE STRIP
- TYPE III MOVEABLE BARRICADE
- DIRECTONAL INDICATOR BARRICADE
- CHANNELIZER
- SIGN (SINGLE SIDED)
- CHANGEABLE MESSAGE SIGN *EXACT LOCATION AND MESSAGE OF CMS TO BE APPROVED BY ENGINEER.
- FLASHING ARROW PANEL

STRIPING NOTES

1. 4-INCH TEMPRARY PAVEMENT MARKING PAINT, WHITE, SOLID
2. 4-INCH TEMPORARY PAVEMENT MARKING PAINT, WHITE, 10' DASH 30' SKIP
3. 4-INCH TEMPORARY PAVEMENT MARKING PAINT, WHITE, DOTTED
4. 4-INCH TEMPORARY PAVEMENT MARKING PAINT, YELLOW, SOLID

TRAFFIC CONTROL PLAN
PHASE 3
SHEET 2 OF 9

STATE OF MISSOURI
JONATHAN R. LOOS
NUMBER PE-2017000326
PROFESSIONAL ENGINEER

DATE PREPARED	5/1/2026
ROUTE	I-270
STATE	MO
DISTRICT	STL
SHEET NO.	32
COUNTY	ST. LOUIS
JOB NO.	J6I3020D
CONTRACT ID.	
PROJECT NO.	
BRIDGE NO.	

DESCRIPTION

DATE

MISSOURI HIGHWAYS AND TRANSPORTATION COMMISSION

MoDOT

105 WEST CAPITOL
JEFFERSON CITY, MO 65102
1-888-ASK-MODOT (1-888-275-6636)

HORNER SHIFRIN

401 S. 18TH ST., STE. 400 ST. LOUIS, MO 63103
314-531-4321 - FAX 314-531-6966
WWW.HORNERSHIFRIN.COM
DISCIPLINE: PROFESSIONAL ENGINEERING
CERTIFICATE OF AUTHORITY: 000159
EXPIRATION DATE: DECEMBER 31, 2026

IF A SEAL IS PRESENT ON THIS SHEET IT HAS BEEN ELECTRONICALLY SEALED AND DATED.

REV.

...\MOT Phase 3 Sheets 10:57:52 AM 5/1/2026

DISCLAIMER

THE PROFESSIONAL WHOSE SIGNATURE AND PERSONAL SEAL APPEAR HEREON ASSUMES RESPONSIBILITY ONLY FOR WHAT APPEARS ON THIS PAGE, AND DISCLAIMS (PURSUANT TO SECTION 327.411 RSMO) SPECIFICATION, ESTIMATES, REPORTS, OR OTHER DOCUMENTS OR INSTRUMENTS NOT SEALED BY THE UNDERSIGNED PROFESSIONAL RELATING TO OR INTENDED TO BE USED FOR ANY PART OR PARTS OF THE PROJECT TO WHICH THIS PAGE REFERS.

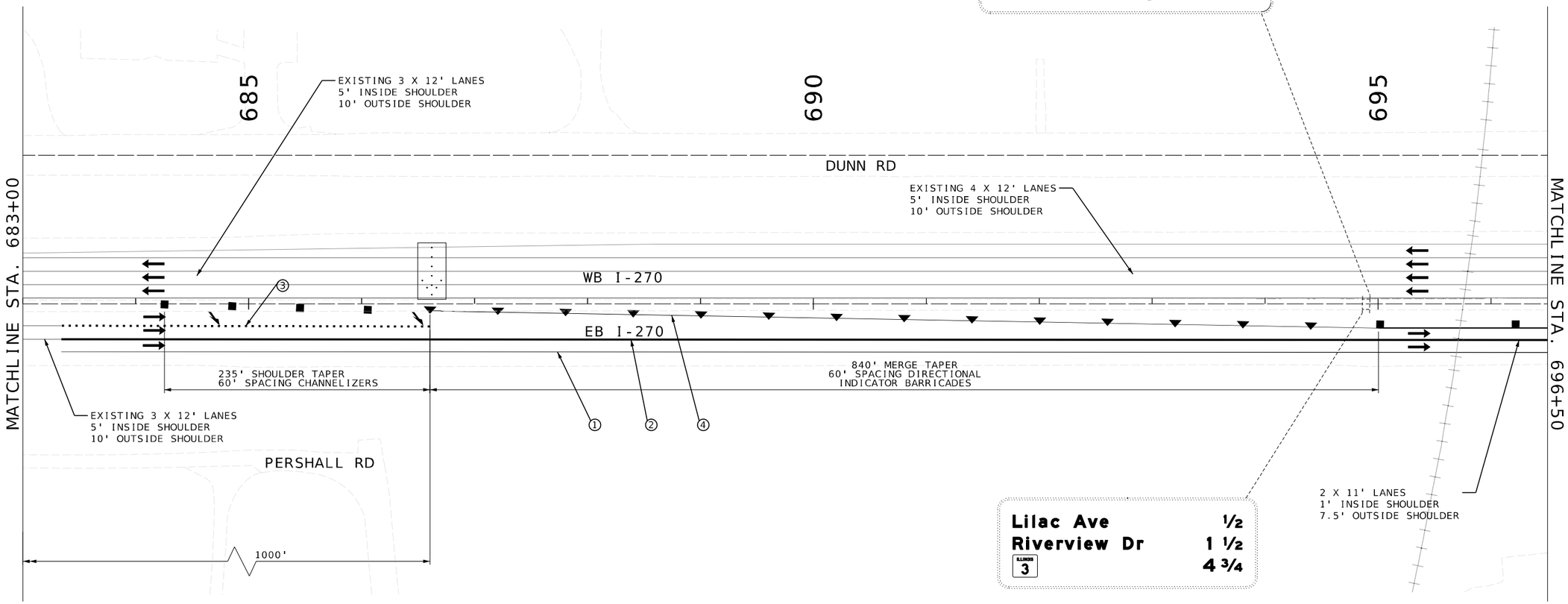

MAINTENANCE OF TRAFFIC LEGEND

- COMPLETED CONSTRUCTION
- WORK ZONE
- TEMPORARY PAVEMENT
- TEMPORARY PAVEMENT PLACED IN PREVIOUS STAGE
- TEMPORARY PAVEMENT TO BE REMOVED IN CURRENT STAGE
- TRAFFIC FLOW
- TEMPORARY LONG-TERM RUMBLE STRIP
- TYPE III MOVEABLE BARRICADE
- DIRECTONAL INDICATOR BARRICADE
- CHANNELIZER
- SIGN (SINGLE SIDED)
- CHANGEABLE MESSAGE SIGN
- FLASHING ARROW PANEL

STRIPING NOTES

1. 4-INCH TEMPRARY PAVEMENT MARKING PAINT, WHITE, SOLID
2. 4-INCH TEMPORARY PAVEMENT MARKING PAINT, WHITE, 10' DASH 30' SKIP
3. 4-INCH TEMPORARY PAVEMENT MARKING PAINT, WHITE, DOTTED
4. 4-INCH TEMPORARY PAVEMENT MARKING PAINT, YELLOW, SOLID

TRAFFIC CONTROL PLAN PHASE 3 SHEET 3 OF 9

STATE OF MISSOURI
JONATHAN R. LODS
NUMBER PE-2017000326
PROFESSIONAL ENGINEER

DATE PREPARED 3/20/2026

ROUTE	STATE
I-270	MO
DISTRICT	SHEET NO.
STL	33

COUNTY: ST. LOUIS
JOB NO.: J6I3020D
CONTRACT ID.:
PROJECT NO.:
BRIDGE NO.:

DESCRIPTION	DATE

IF A SEAL IS PRESENT ON THIS SHEET IT HAS BEEN ELECTRONICALLY SEALED AND DATED.

MISSOURI HIGHWAYS AND TRANSPORTATION COMMISSION
105 WEST CAPITOL
JEFFERSON CITY, MO 65102
1-888-ASK-MODOT (1-888-275-6636)

HORNER SHIFRIN
401 S. 18TH ST., STE. 400 ST. LOUIS, MO 63103
314-241-1976 FAX 314-241-1988
SHOWCASE@HORNERSHIFRIN.COM
DISCIPLINE: PROFESSIONAL ENGINEERING
CERTIFICATE OF AUTHORITY: 000159
EXPIRATION DATE: DECEMBER 31, 2026

REV.

DISCLAIMER

THE PROFESSIONAL WHOSE SIGNATURE AND PERSONAL SEAL APPEAR HEREON ASSUMES RESPONSIBILITY ONLY FOR WHAT APPEARS ON THIS PAGE, AND DISCLAIMS (PURSUANT TO SECTION 327.411 RSMO) SPECIFICATION, ESTIMATES, REPORTS, OR OTHER DOCUMENTS OR INSTRUMENTS NOT SEALED BY THE UNDERSIGNED PROFESSIONAL RELATING TO OR INTENDED TO BE USED FOR ANY PART OR PARTS OF THE PROJECT TO WHICH THIS PAGE REFERS.

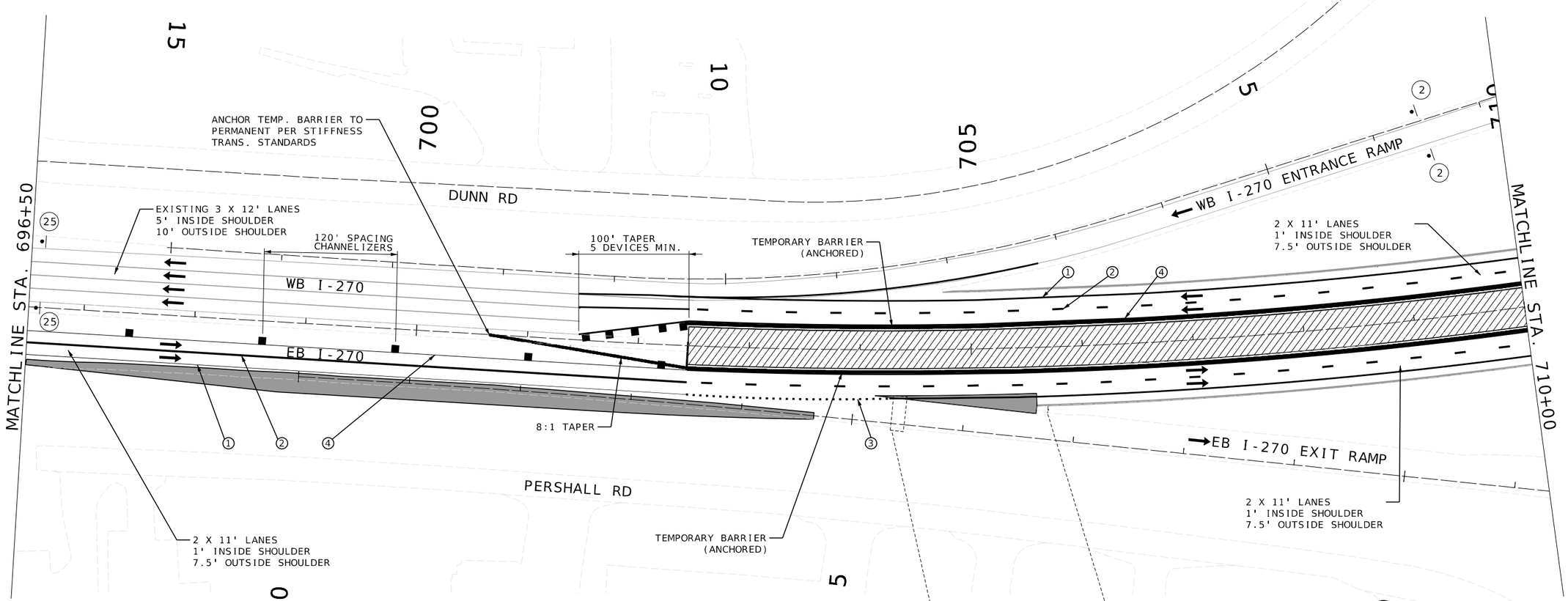

MAINTENANCE OF TRAFFIC LEGEND

- COMPLETED CONSTRUCTION
- WORK ZONE
- TEMPORARY PAVEMENT
- TEMPORARY PAVEMENT PLACED IN PREVIOUS STAGE
- TEMPORARY PAVEMENT TO BE REMOVED IN CURRENT STAGE
- TRAFFIC FLOW
- TEMPORARY LONG-TERM RUMBLE STRIP
- TYPE III MOVEABLE BARRICADE
- DIRECTONAL INDICATOR BARRICADE
- CHANNELIZER
- SIGN (SINGLE SIDED)
- CHANGEABLE MESSAGE SIGN
- FLASHING ARROW PANEL

STRIPING NOTES

1. 4-INCH TEMPRARY PAVEMENT MARKING PAINT, WHITE, SOLID
2. 4-INCH TEMPORARY PAVEMENT MARKING PAINT, WHITE, 10' DASH 30' SKIP
3. 4-INCH TEMPORARY PAVEMENT MARKING PAINT, WHITE, DOTTED
4. 4-INCH TEMPORARY PAVEMENT MARKING PAINT, YELLOW, SOLID

TRAFFIC CONTROL PLAN PHASE 3 SHEET 4 OF 9

STATE OF MISSOURI
JONATHAN R. LODS
NUMBER PE-2017000326
PROFESSIONAL ENGINEER

DATE PREPARED: 3/20/2026

ROUTE	STATE
I-270	MO
DISTRICT	SHEET NO.
STL	34

COUNTY: ST. LOUIS
JOB NO.: J6I3020D
CONTRACT ID.:
PROJECT NO.:
BRIDGE NO.:

DESCRIPTION | DATE | REV.

IF A SEAL IS PRESENT ON THIS SHEET IT HAS BEEN ELECTRONICALLY SEALED AND DATED.

MISSOURI HIGHWAYS AND TRANSPORTATION COMMISSION
105 WEST CAPITOL
JEFFERSON CITY, MO 65102
1-888-ASK-MODOT (1-888-275-6636)

HORNER SHIFRIN
401 S. 18TH ST., STE. 400 ST. LOUIS, MO 63103
314.241.1976 FAX 314.241.1988
WWW.HORNERSHIFRIN.COM
DISCIPLINE: PROFESSIONAL ENGINEERING
CERTIFICATE OF AUTHORITY: 000159
EXPIRATION DATE: DECEMBER 31, 2026

DISCLAIMER

THE PROFESSIONAL WHOSE SIGNATURE AND PERSONAL SEAL APPEAR HEREON ASSUMES RESPONSIBILITY ONLY FOR WHAT APPEARS ON THIS PAGE, AND DISCLAIMS (PURSUANT TO SECTION 327.411 RSMO) SPECIFICATION, ESTIMATES, REPORTS, OR OTHER DOCUMENTS OR INSTRUMENTS NOT SEALED BY THE UNDERSIGNED PROFESSIONAL RELATING TO OR INTENDED TO BE USED FOR ANY PART OR PARTS OF THE PROJECT TO WHICH THIS PAGE REFERS.

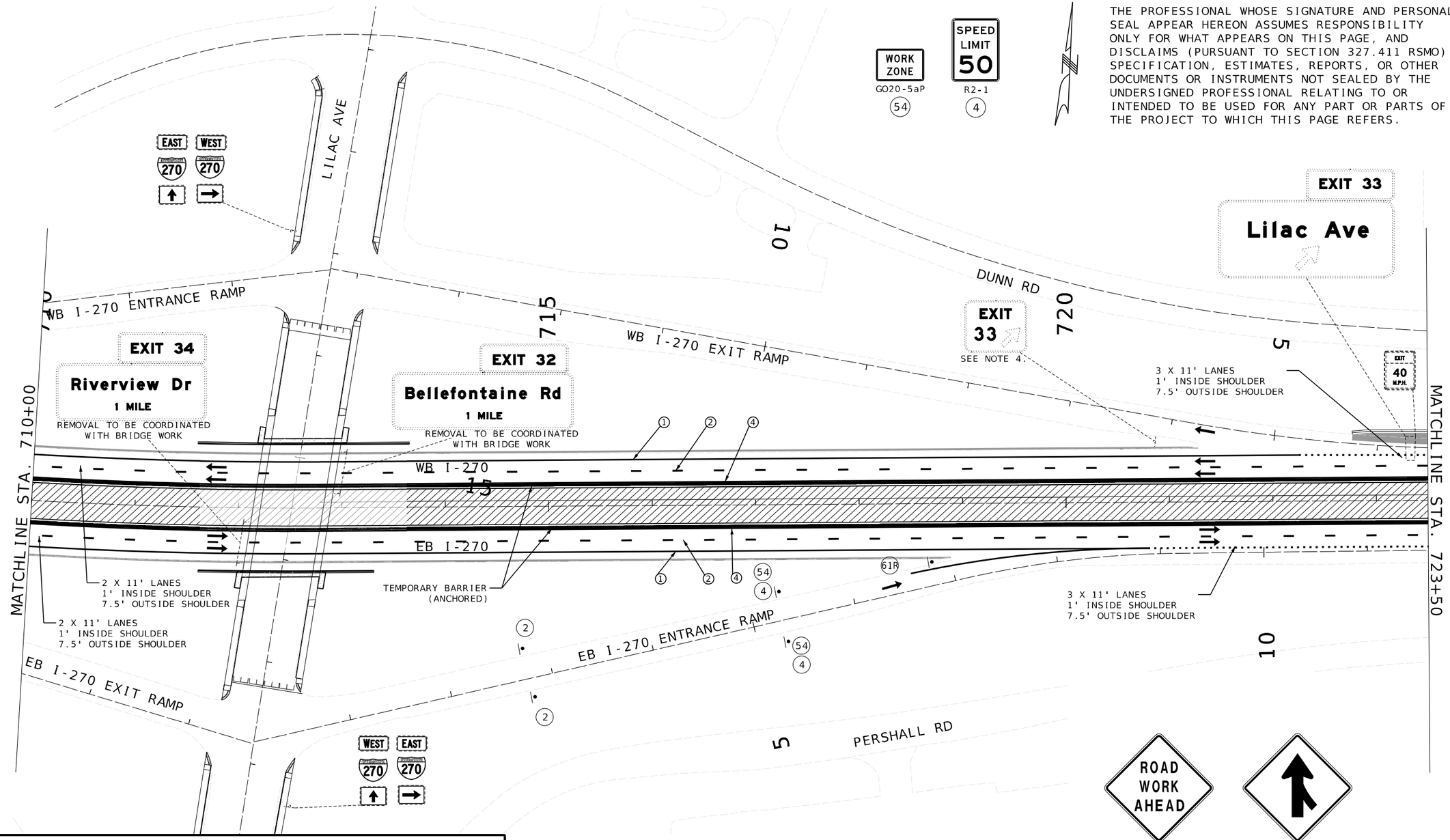

ROAD WORK AHEAD
WO20-1
2

WO4-1R
61R

SCALE
0 50 100 150

MAINTENANCE OF TRAFFIC LEGEND

- COMPLETED CONSTRUCTION
- WORK ZONE
- TEMPORARY PAVEMENT
- TEMPORARY PAVEMENT PLACED IN PREVIOUS STAGE
- TEMPORARY PAVEMENT TO BE REMOVED IN CURRENT STAGE
- TRAFFIC FLOW
- TEMPORARY LONG-TERM RUMBLE STRIP
- TYPE III MOVEABLE BARRICADE
- DIRECTONAL INDICATOR BARRICADE
- CHANNELIZER
- SIGN (SINGLE SIDED)
- CHANGEABLE MESSAGE SIGN
- FLASHING ARROW PANEL

STRIPING NOTES

1. 4-INCH TEMPRARY PAVEMENT MARKING PAINT, WHITE, SOLID
2. 4-INCH TEMPORARY PAVEMENT MARKING PAINT, WHITE, 10' DASH 30' SKIP
3. 4-INCH TEMPORARY PAVEMENT MARKING PAINT, WHITE, DOTTED
4. 4-INCH TEMPORARY PAVEMENT MARKING PAINT, YELLOW, SOLID

TRAFFIC CONTROL PLAN PHASE 3 SHEET 5 OF 9

STATE OF MISSOURI
JONATHAN R. LODS
NUMBER PE-2017000326
PROFESSIONAL ENGINEER

DATE PREPARED 3/20/2026

ROUTE	STATE
I-270	MO
DISTRICT	SHEET NO.
STL	35

COUNTY: ST. LOUIS
JOB NO.: J6I3020D
CONTRACT ID.:
PROJECT NO.:
BRIDGE NO.:

DESCRIPTION	DATE

IF A SEAL IS PRESENT ON THIS SHEET IT HAS BEEN ELECTRONICALLY SEALED AND DATED.

MISSOURI HIGHWAYS AND TRANSPORTATION COMMISSION
105 WEST CAPITOL
JEFFERSON CITY, MO 65102
1-888-ASK-MODOT (1-888-275-6636)

HORNER SHIFRIN
401 S. 18TH ST., STE. 400 ST. LOUIS, MO 63103
314.241.1976 FAX 314.241.1988
WWW.HORNERSHIFRIN.COM
DISCIPLINE: PROFESSIONAL ENGINEERING
CERTIFICATE OF AUTHORITY: 000159
EXPIRATION DATE: DECEMBER 31, 2026

REV.

...\MOT Phase 3 Sheets 12:38:34 PM 3/20/2026

DISCLAIMER

THE PROFESSIONAL WHOSE SIGNATURE AND PERSONAL SEAL APPEAR HEREON ASSUMES RESPONSIBILITY ONLY FOR WHAT APPEARS ON THIS PAGE, AND DISCLAIMS (PURSUANT TO SECTION 327.411 RSMO) SPECIFICATION, ESTIMATES, REPORTS, OR OTHER DOCUMENTS OR INSTRUMENTS NOT SEALED BY THE UNDERSIGNED PROFESSIONAL RELATING TO OR INTENDED TO BE USED FOR ANY PART OR PARTS OF THE PROJECT TO WHICH THIS PAGE REFERS.

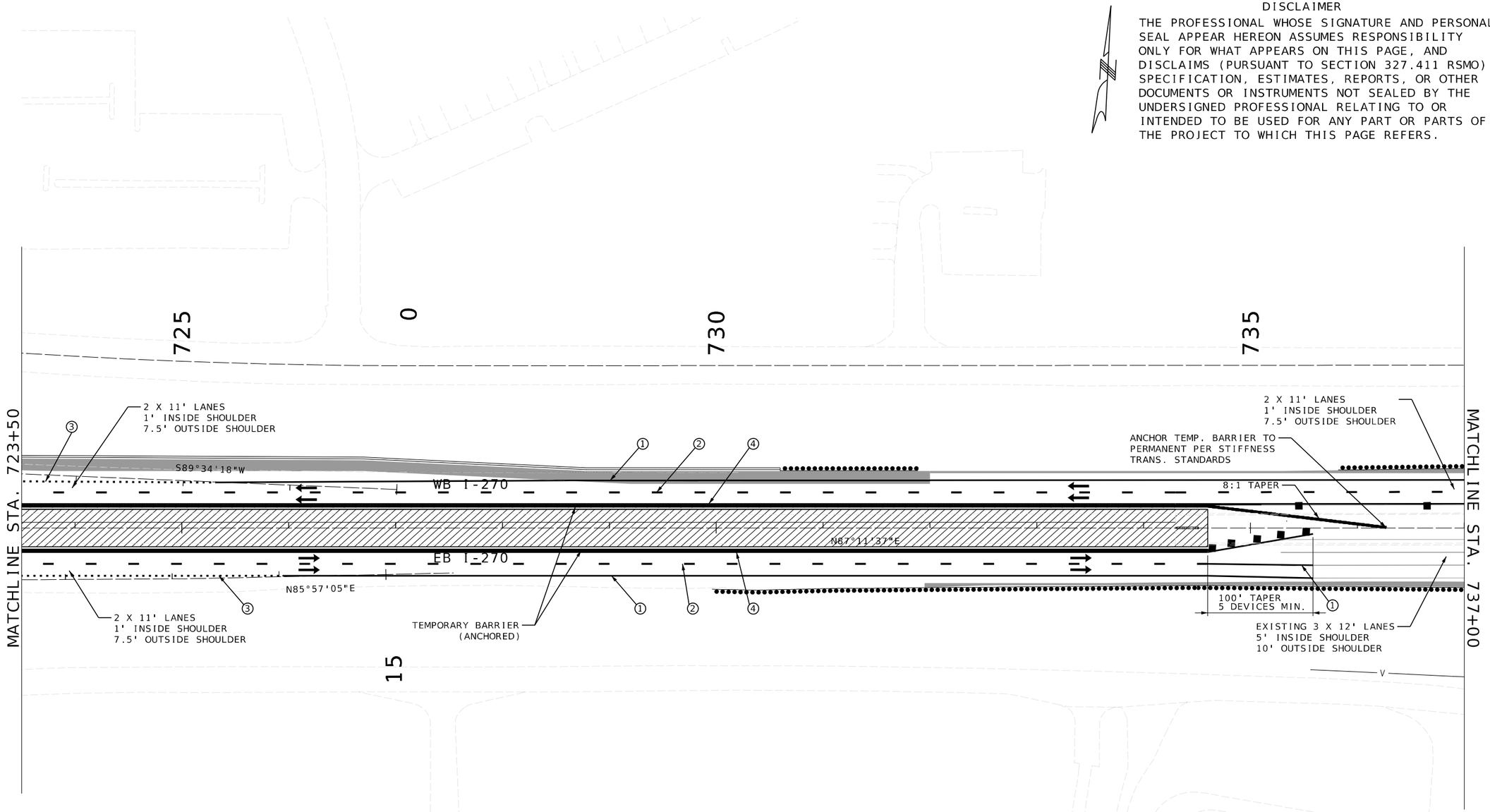

SCALE

0 50 100 150

MAINTENANCE OF TRAFFIC LEGEND

- COMPLETED CONSTRUCTION
- WORK ZONE
- TEMPORARY PAVEMENT
- TEMPORARY PAVEMENT PLACED IN PREVIOUS STAGE
- TEMPORARY PAVEMENT TO BE REMOVED IN CURRENT STAGE
- TRAFFIC FLOW
- TEMPORARY LONG-TERM RUMBLE STRIP
- TYPE III MOVEABLE BARRICADE
- DIRECTONAL INDICATOR BARRICADE
- CHANNELIZER
- SIGN (SINGLE SIDED)
- CHANGEABLE MESSAGE SIGN
- FLASHING ARROW PANEL

STRIPING NOTES

1. 4-INCH TEMPRARY PAVEMENT MARKING PAINT, WHITE, SOLID
2. 4-INCH TEMPORARY PAVEMENT MARKING PAINT, WHITE, 10' DASH 30' SKIP
3. 4-INCH TEMPORARY PAVEMENT MARKING PAINT, WHITE, DOTTED
4. 4-INCH TEMPORARY PAVEMENT MARKING PAINT, YELLOW, SOLID

TRAFFIC CONTROL PLAN
PHASE 3
SHEET 6 OF 9

STATE OF MISSOURI
JONATHAN R. LOOS
NUMBER PE-2017000326
PROFESSIONAL ENGINEER

DATE PREPARED	3/20/2026
ROUTE	I-270
STATE	MO
DISTRICT	STL
SHEET NO.	36
COUNTY	ST. LOUIS
JOB NO.	J6I3020D
CONTRACT ID.	
PROJECT NO.	
BRIDGE NO.	

DATE	DESCRIPTION

MISSOURI HIGHWAYS AND TRANSPORTATION COMMISSION

MoDOT

105 WEST CAPITOL
JEFFERSON CITY, MO 65102
1-888-ASK-MODOT (1-888-275-6636)

HORNER SHIFRIN

401 S. 18TH ST., STE. 400 ST. LOUIS, MO 63103
314-531-4321 - FAX 314-531-6966
WWW.HORNERSHIFRIN.COM
DISCIPLINE: PROFESSIONAL ENGINEERING
CERTIFICATE OF AUTHORITY: 000159
EXPIRATION DATE: DECEMBER 31, 2026

IF A SEAL IS PRESENT ON THIS SHEET IT HAS BEEN ELECTRONICALLY SEALED AND DATED.

REV.

...\MOT Phase 3 Sheets 12:38:38 PM 3/20/2026

DISCLAIMER

THE PROFESSIONAL WHOSE SIGNATURE AND PERSONAL SEAL APPEAR HEREON ASSUMES RESPONSIBILITY ONLY FOR WHAT APPEARS ON THIS PAGE, AND DISCLAIMS (PURSUANT TO SECTION 327.411 RSMO) SPECIFICATION, ESTIMATES, REPORTS, OR OTHER DOCUMENTS OR INSTRUMENTS NOT SEALED BY THE UNDERSIGNED PROFESSIONAL RELATING TO OR INTENDED TO BE USED FOR ANY PART OR PARTS OF THE PROJECT TO WHICH THIS PAGE REFERS.

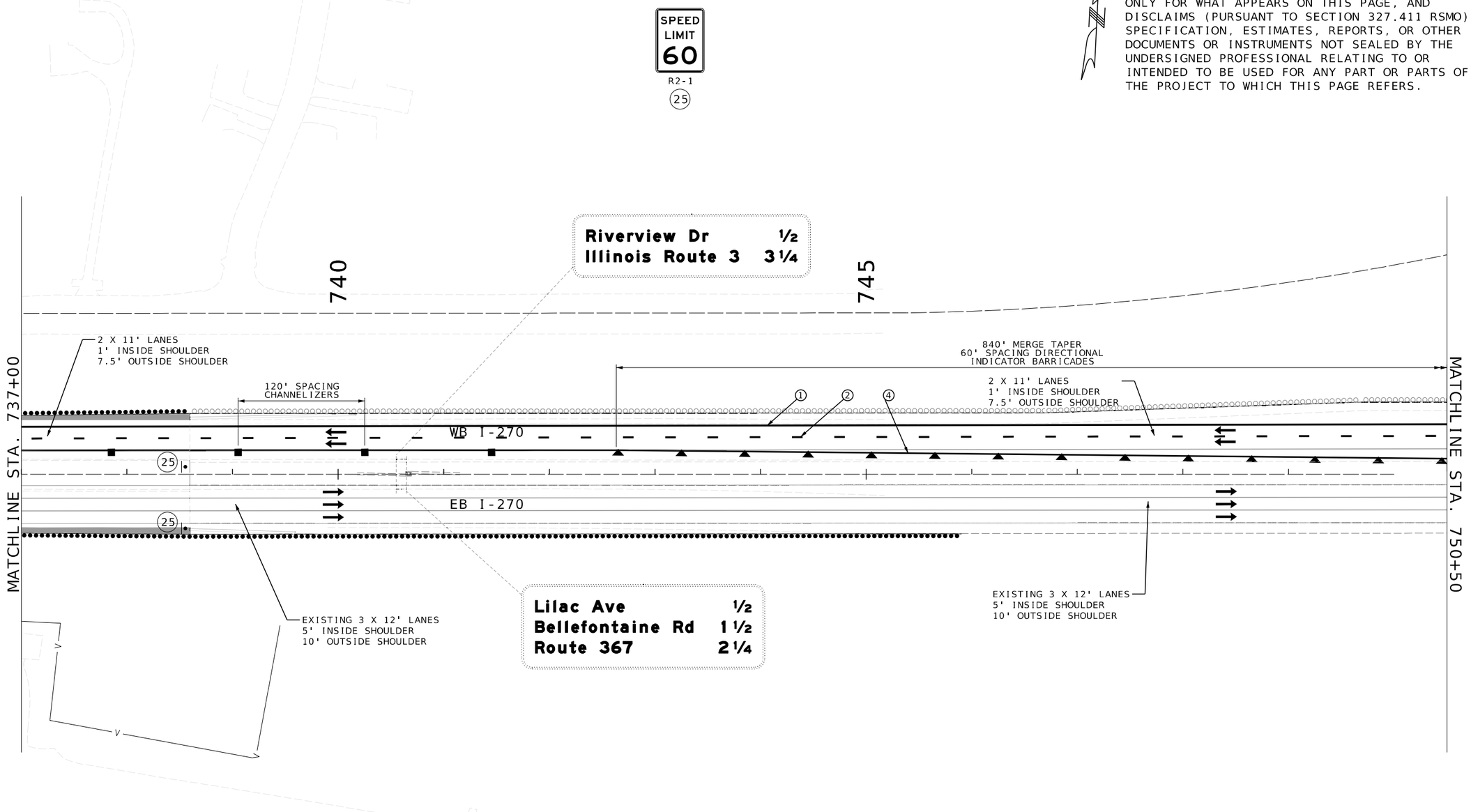

MAINTENANCE OF TRAFFIC LEGEND

- COMPLETED CONSTRUCTION
- WORK ZONE
- TEMPORARY PAVEMENT
- TEMPORARY PAVEMENT PLACED IN PREVIOUS STAGE
- TEMPORARY PAVEMENT TO BE REMOVED IN CURRENT STAGE
- TRAFFIC FLOW
- TEMPORARY LONG-TERM RUMBLE STRIP
- TYPE III MOVEABLE BARRICADE
- DIRECTONAL INDICATOR BARRICADE
- CHANNELIZER
- SIGN (SINGLE SIDED)
- CHANGEABLE MESSAGE SIGN
- FLASHING ARROW PANEL

SCALE

0 50 100 150

STRIPING NOTES

1. 4-INCH TEMPRARY PAVEMENT MARKING PAINT, WHITE, SOLID
2. 4-INCH TEMPORARY PAVEMENT MARKING PAINT, WHITE, 10' DASH 30' SKIP
3. 4-INCH TEMPORARY PAVEMENT MARKING PAINT, WHITE, DOTTED
4. 4-INCH TEMPORARY PAVEMENT MARKING PAINT, YELLOW, SOLID

TRAFFIC CONTROL PLAN
PHASE 3
SHEET 7 OF 9

STATE OF MISSOURI
JONATHAN R. LODS
NUMBER PE-2017000326
PROFESSIONAL ENGINEER

DATE PREPARED	3/20/2026
ROUTE	I-270
STATE	MO
DISTRICT	STL
SHEET NO.	37
COUNTY	ST. LOUIS
JOB NO.	J6I3020D
CONTRACT ID.	
PROJECT NO.	
BRIDGE NO.	

DESCRIPTION

DATE

MISSOURI HIGHWAYS AND TRANSPORTATION COMMISSION

MoDOT

105 WEST CAPITOL
JEFFERSON CITY, MO 65102
1-888-ASK-MODOT (1-888-275-6636)

HORNER SHIFRIN

401 S. 18TH ST., STE. 400 ST. LOUIS, MO 63103
314-531-4321 - FAX 314-531-6966
WWW.HORNERSHIFRIN.COM
DISCIPLINE: PROFESSIONAL ENGINEERING
CERTIFICATE OF AUTHORITY: 000159
EXPIRATION DATE: DECEMBER 31, 2026

IF A SEAL IS PRESENT ON THIS SHEET IT HAS BEEN ELECTRONICALLY SEALED AND DATED.

REV.

...\MOT Phase 3 Sheets 12:38:40 PM 3/20/2026

DISCLAIMER

THE PROFESSIONAL WHOSE SIGNATURE AND PERSONAL SEAL APPEAR HEREON ASSUMES RESPONSIBILITY ONLY FOR WHAT APPEARS ON THIS PAGE, AND DISCLAIMS (PURSUANT TO SECTION 327.411 RSMO) SPECIFICATION, ESTIMATES, REPORTS, OR OTHER DOCUMENTS OR INSTRUMENTS NOT SEALED BY THE UNDERSIGNED PROFESSIONAL RELATING TO OR INTENDED TO BE USED FOR ANY PART OR PARTS OF THE PROJECT TO WHICH THIS PAGE REFERS.

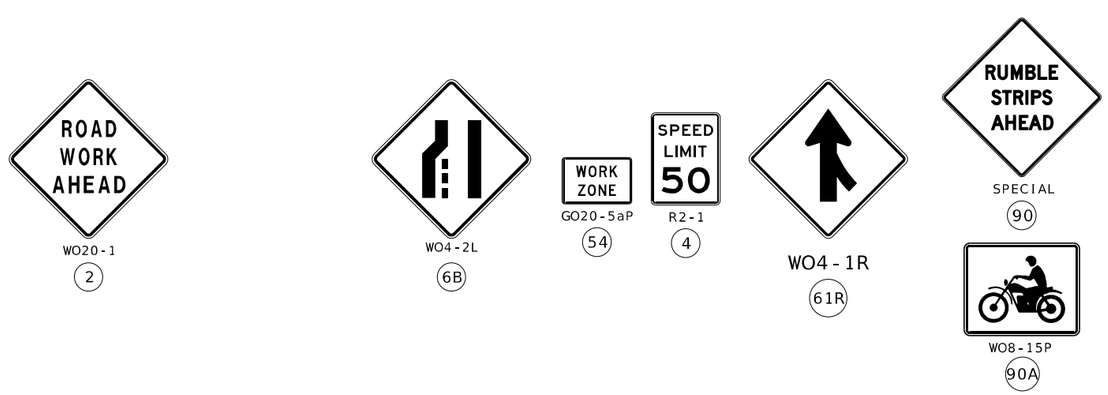

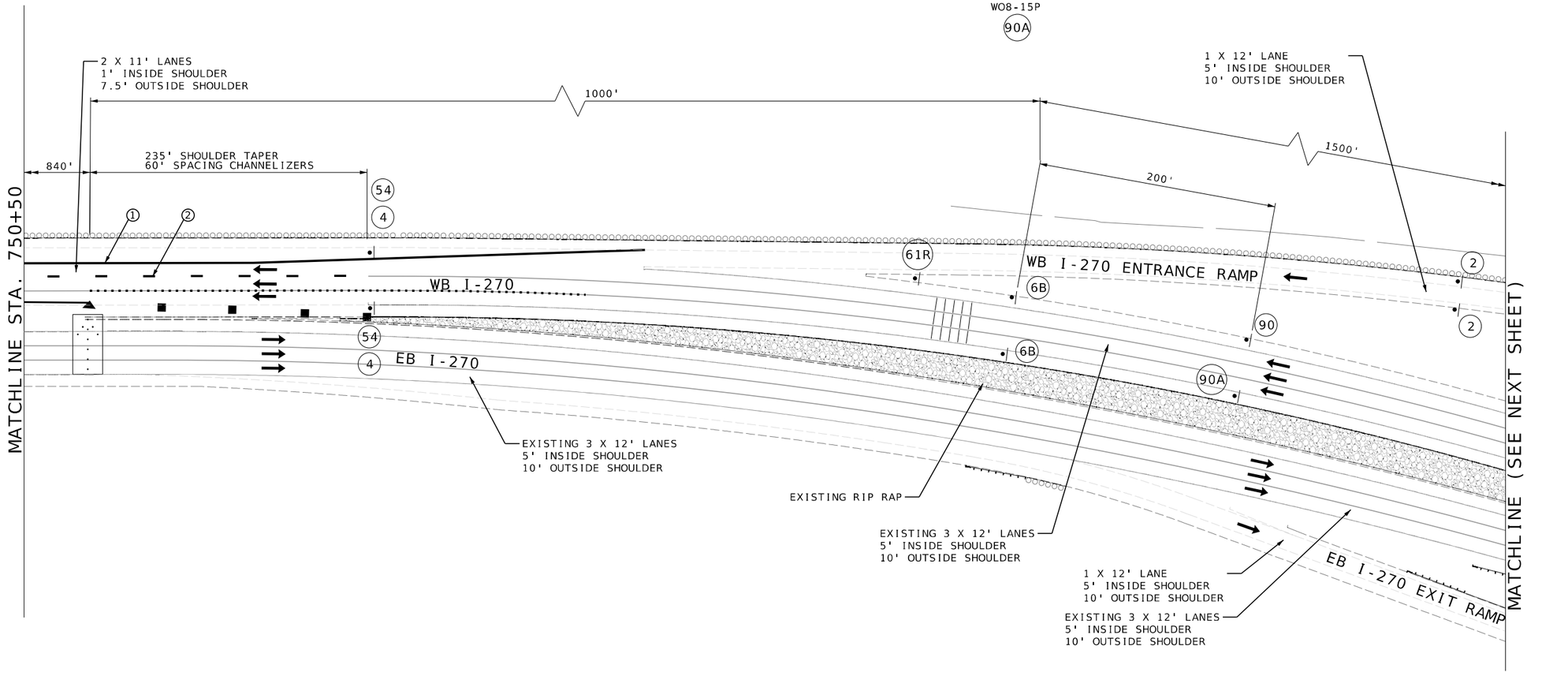

MAINTENANCE OF TRAFFIC LEGEND

- COMPLETED CONSTRUCTION
- WORK ZONE
- TEMPORARY PAVEMENT
- TEMPORARY PAVEMENT PLACED IN PREVIOUS STAGE
- TEMPORARY PAVEMENT TO BE REMOVED IN CURRENT STAGE
- TRAFFIC FLOW
- TEMPORARY LONG-TERM RUMBLE STRIP
- TYPE III MOVEABLE BARRICADE
- DIRECTONAL INDICATOR BARRICADE
- CHANNELIZER
- SIGN (SINGLE SIDED)
- CHANGEABLE MESSAGE SIGN
- FLASHING ARROW PANEL

STRIPING NOTES

1. 4-INCH TEMPRARY PAVEMENT MARKING PAINT, WHITE, SOLID
2. 4-INCH TEMPORARY PAVEMENT MARKING PAINT, WHITE, 10' DASH 30' SKIP
3. 4-INCH TEMPORARY PAVEMENT MARKING PAINT, WHITE, DOTTED
4. 4-INCH TEMPORARY PAVEMENT MARKING PAINT, YELLOW, SOLID

TRAFFIC CONTROL PLAN
PHASE 3
SHEET 8 OF 9

STATE OF MISSOURI
JONATHAN R. LODS
NUMBER PE-2017000326
PROFESSIONAL ENGINEER

DATE PREPARED	5/1/2026
ROUTE	I-270
STATE	MO
DISTRICT	STL
SHEET NO.	38
COUNTY	ST. LOUIS
JOB NO.	J6I3020D
CONTRACT ID.	
PROJECT NO.	
BRIDGE NO.	

DESCRIPTION

DATE

MISSOURI HIGHWAYS AND TRANSPORTATION COMMISSION

MoDOT

105 WEST CAPITOL
JEFFERSON CITY, MO 65102
1-888-ASK-MODOT (1-888-275-6636)

HORNER SHIFRIN

401 S. 18TH ST., STE. 400 ST. LOUIS, MO 63103
314-531-4321 - FAX 314-531-6966
WWW.HORNERSHIFRIN.COM
DISCIPLINE: PROFESSIONAL ENGINEERING
CERTIFICATE OF AUTHORITY: 000159
EXPIRATION DATE: DECEMBER 31, 2026

IF A SEAL IS PRESENT ON THIS SHEET IT HAS BEEN ELECTRONICALLY SEALED AND DATED.

REV.

...\MOT Phase 3 Sheets 10:57:53 AM 5/1/2026

DISCLAIMER

THE PROFESSIONAL WHOSE SIGNATURE AND PERSONAL SEAL APPEAR HEREON ASSUMES RESPONSIBILITY ONLY FOR WHAT APPEARS ON THIS PAGE, AND DISCLAIMS (PURSUANT TO SECTION 327.411 RSMO) SPECIFICATION, ESTIMATES, REPORTS, OR OTHER DOCUMENTS OR INSTRUMENTS NOT SEALED BY THE UNDERSIGNED PROFESSIONAL RELATING TO OR INTENDED TO BE USED FOR ANY PART OR PARTS OF THE PROJECT TO WHICH THIS PAGE REFERS.

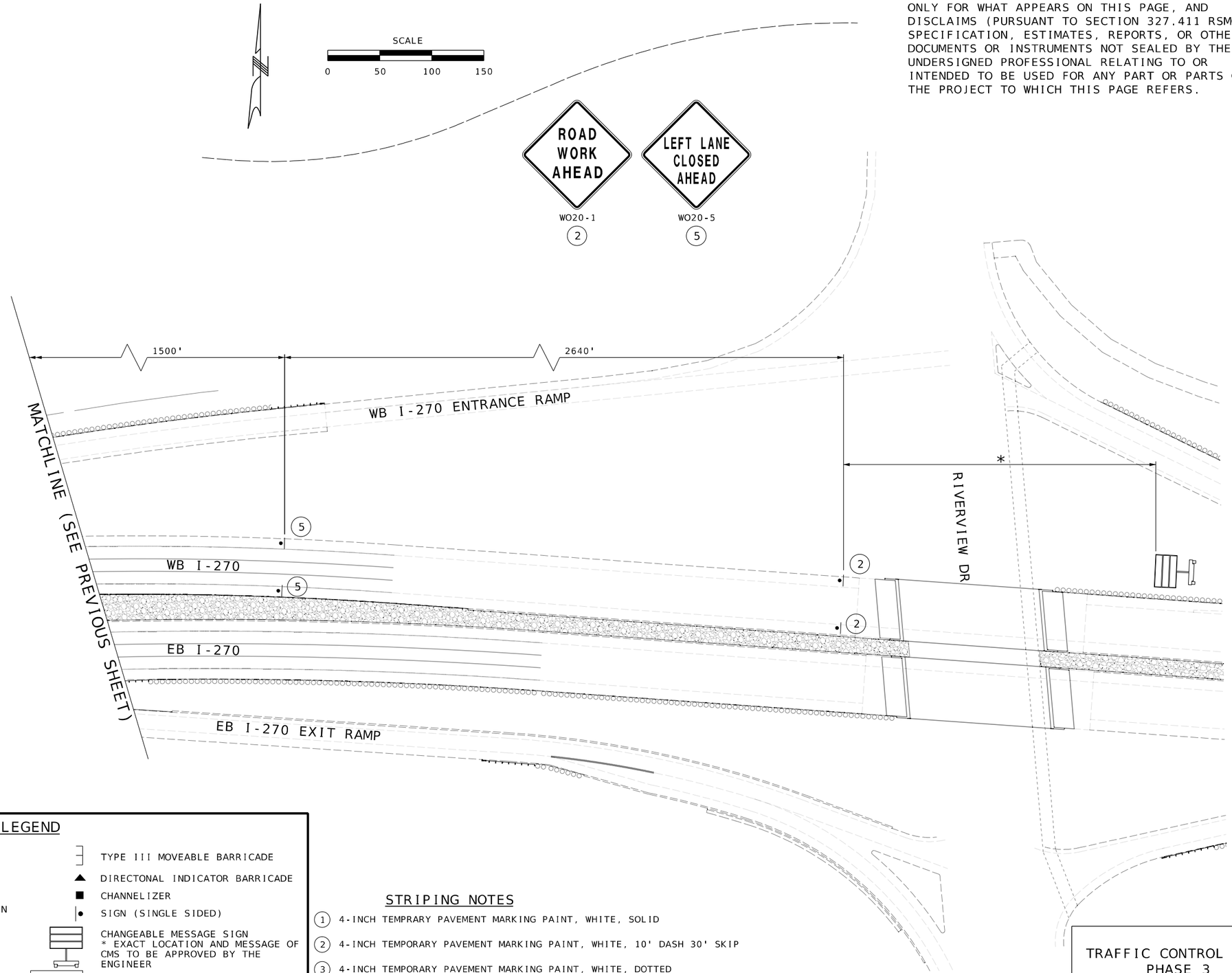

MAINTENANCE OF TRAFFIC LEGEND

- COMPLETED CONSTRUCTION
- WORK ZONE
- TEMPORARY PAVEMENT
- TEMPORARY PAVEMENT PLACED IN PREVIOUS STAGE
- TEMPORARY PAVEMENT TO BE REMOVED IN CURRENT STAGE
- TRAFFIC FLOW
- TEMPORARY LONG-TERM RUMBLE STRIP
- TYPE III MOVEABLE BARRICADE
- DIRECTONAL INDICATOR BARRICADE
- CHANNELIZER
- SIGN (SINGLE SIDED)
- CHANGEABLE MESSAGE SIGN * EXACT LOCATION AND MESSAGE OF CMS TO BE APPROVED BY THE ENGINEER
- FLASHING ARROW PANEL

STRIPING NOTES

1. 4-INCH TEMPRARY PAVEMENT MARKING PAINT, WHITE, SOLID
2. 4-INCH TEMPORARY PAVEMENT MARKING PAINT, WHITE, 10' DASH 30' SKIP
3. 4-INCH TEMPORARY PAVEMENT MARKING PAINT, WHITE, DOTTED
4. 4-INCH TEMPORARY PAVEMENT MARKING PAINT, YELLOW, SOLID

TRAFFIC CONTROL PLAN
PHASE 3
SHEET 9 OF 9

STATE OF MISSOURI
JONATHAN R. LODS
NUMBER PE-2017000326
PROFESSIONAL ENGINEER

DATE PREPARED
3/20/2026

ROUTE	STATE
I-270	MO
DISTRICT	SHEET NO.
STL	39

COUNTY
ST. LOUIS

JOB NO.
J6I3020D

CONTRACT ID.
.

PROJECT NO.
.

BRIDGE NO.
.

DESCRIPTION	DATE
.	.
.	.
.	.
.	.
.	.
.	.
.	.

IF A SEAL IS PRESENT ON THIS SHEET IT HAS BEEN ELECTRONICALLY SEALED AND DATED.

MISSOURI HIGHWAYS AND TRANSPORTATION COMMISSION

105 WEST CAPITOL
JEFFERSON CITY, MO 65102
1-888-ASK-MODOT (1-888-275-6636)

HORNER SHIFRIN

401 S. 18TH ST., STE. 400 ST. LOUIS, MO 63103
314-241-1976 FAX 314-241-1988
WWW.HORNERSHIFRIN.COM
DISCIPLINE: PROFESSIONAL ENGINEERING
CERTIFICATE OF AUTHORITY: 000159
EXPIRATION DATE: DECEMBER 31, 2026

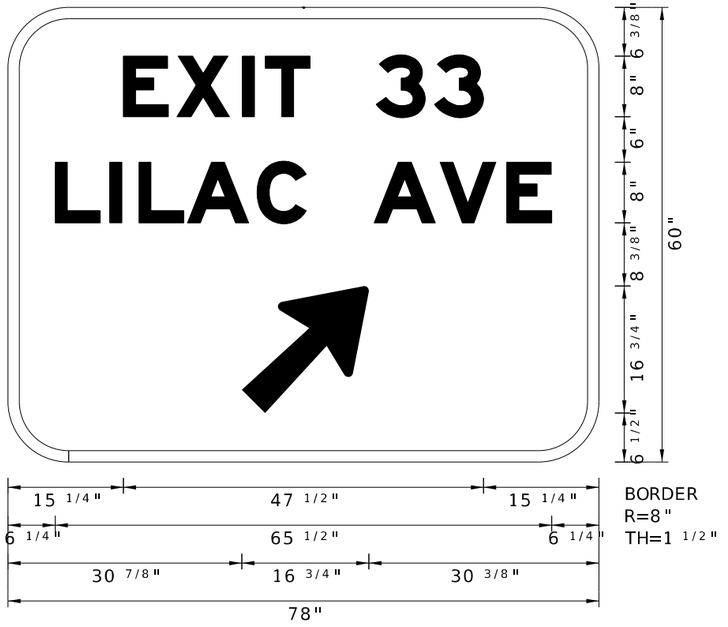

Panel Style: guide_fwy_gore.ssi
M.U.T.C.D.:: 2023 Edition

101

TEMPORARY TRAFFIC CONTROL
DETAIL SHEET 1 OF 1

STATE OF MISSOURI
JONATHAN R. LOOS
NUMBER
PE 2017000326
PROFESSIONAL ENGINEER

DATE PREPARED	3/20/2026
ROUTE	I-270
STATE	MO
DISTRICT	STL
SHEET NO.	40
COUNTY	ST. LOUIS
JOB NO.	J6I3020D
CONTRACT ID.	.
PROJECT NO.	.
BRIDGE NO.	.

DATE	DESCRIPTION
.	.
.	.
.	.
.	.
.	.
.	.
.	.

MISSOURI HIGHWAYS AND TRANSPORTATION COMMISSION

MoDOT

105 WEST CAPITOL
JEFFERSON CITY, MO 65102
1-888-ASK-MODOT (1-888-275-6636)

HORNER SHIFRIN

401 S. 18TH ST., STE. 400 ST. LOUIS, MO 63103
314-531-4321 - FAX 314-531-6966
WWW.HORNERSHIFRIN.COM
DISCIPLINE: PROFESSIONAL ENGINEERING
CERTIFICATE OF AUTHORITY: 000159
EXPIRATION DATE: DECEMBER 31, 2026

IF A SEAL IS PRESENT ON THIS SHEET IT HAS BEEN ELECTRONICALLY SEALED AND DATED.

REV.

...\Custom Sign for TC Sheets 12:38:51 PM 3/20/2026

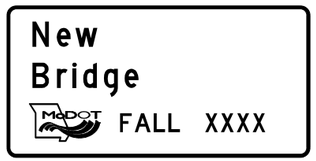

CONST-5

(1)



WO20-2

(18)



WO20-3

(20)



R11-2

(29)



R3-2

(11)



MO4-8a

(52)

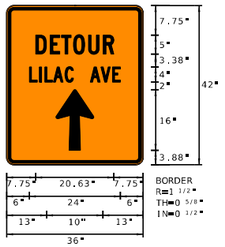

Panel Style: construction_guide.ssi
M.U.T.C.D.:: 2023 Edition

(50A)

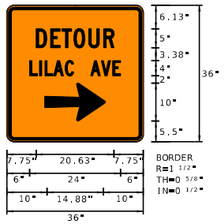

Panel Style: construction_guide.ssi
M.U.T.C.D.:: 2023 Edition

(50B)

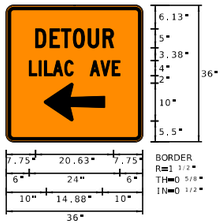

Panel Style: construction_guide.ssi
M.U.T.C.D.:: 2023 Edition

(50C)

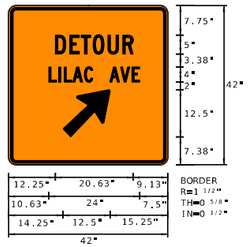

Panel Style: construction_guide.ssi
M.U.T.C.D.:: 2023 Edition

(50D)

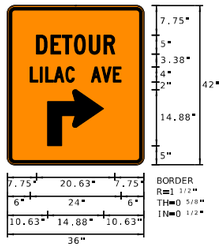

Panel Style: construction_guide.ssi
M.U.T.C.D.:: 2023 Edition

(50E)

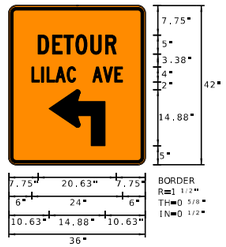

Panel Style: construction_guide.ssi
M.U.T.C.D.:: 2023 Edition

(50F)

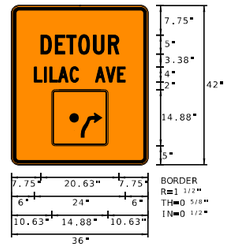

Panel Style: construction_guide.ssi
M.U.T.C.D.:: 2023 Edition

(50G)



Panel Style: construction_guide.ssi
M.U.T.C.D.:: 2023 Edition

(63A)

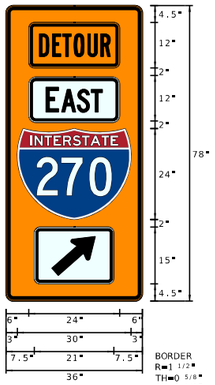

Panel Style: construction_guide.ssi
M.U.T.C.D.:: 2023 Edition

(63C)



Panel Style: construction_guide.ssi
M.U.T.C.D.:: 2023 Edition

(64A)



Panel Style: construction_guide.ssi
M.U.T.C.D.:: 2023 Edition

(64B)



Panel Style: construction_guide.ssi
M.U.T.C.D.:: 2023 Edition

(64C)



M.U.T.C.D.:: 2023 Edition

(64D)



Panel Style: construction_guide.ssi
M.U.T.C.D.:: 2023 Edition

(64E)



M.U.T.C.D.:: 2023 Edition

(64F)



Panel Style: construction_guide.ssi
M.U.T.C.D.:: 2023 Edition

(64G)

TEMPORARY TRAFFIC CONTROL
DETOUR SIGN LEGEND
DETOUR SHEET 1 OF 5

HORNER SHIFRIN
401 S. 18TH ST., STE. 400 ST. LOUIS, MO 63103
314.241.4844 FAX 314.241.4895
WWW.HORNERSHIFRIN.COM
DISCIPLINE: PROFESSIONAL ENGINEERING
CERTIFICATE OF AUTHORITY: 000159
EXPIRATION DATE: DECEMBER 31, 2026

STATE OF MISSOURI
JONATHAN R. LOOS NUMBER PE-2010020226
PROFESSIONAL ENGINEER

DATE PREPARED
3/20/2026

ROUTE	STATE
I-270	MO
DISTRICT	SHEET NO.
STL	41

COUNTY
ST. LOUIS

JOB NO.
J6I3020D

CONTRACT ID.
.

PROJECT NO.
.

BRIDGE NO.
.

REV.	DESCRIPTION	DATE
.	.	.
.	.	.
.	.	.
.	.	.
.	.	.
.	.	.
.	.	.

MISSOURI HIGHWAYS AND TRANSPORTATION COMMISSION
105 WEST CAPITOL
JEFFERSON CITY, MO 65102
1-888-ASK-MODOT (1-888-275-6636)

IF A SEAL IS PRESENT ON THIS SHEET IT HAS BEEN ELECTRONICALLY SEALED AND DATED.

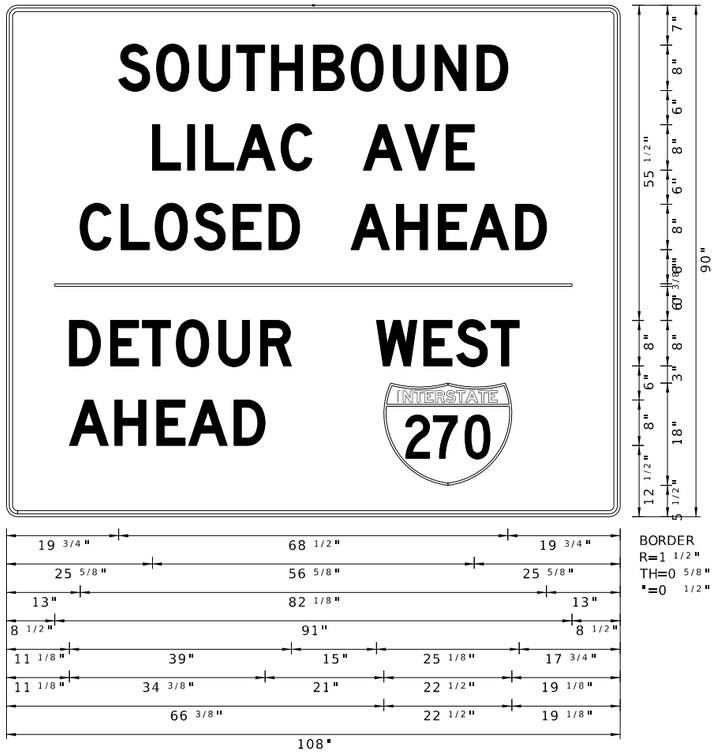

Panel Style: construction_guide.ssi
M.U.T.C.D.:: 2023 Edition

102

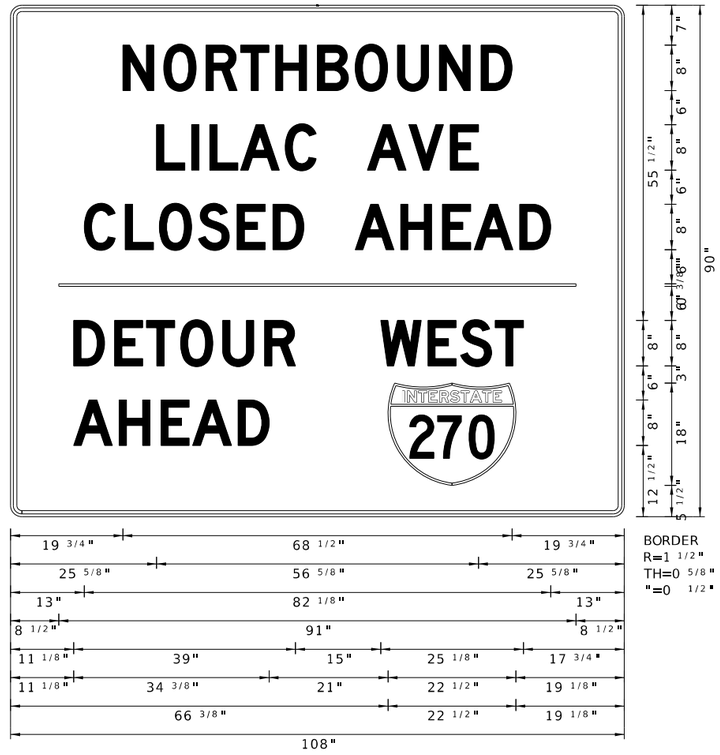

Panel Style: construction_guide.ssi
M.U.T.C.D.:: 2023 Edition

103

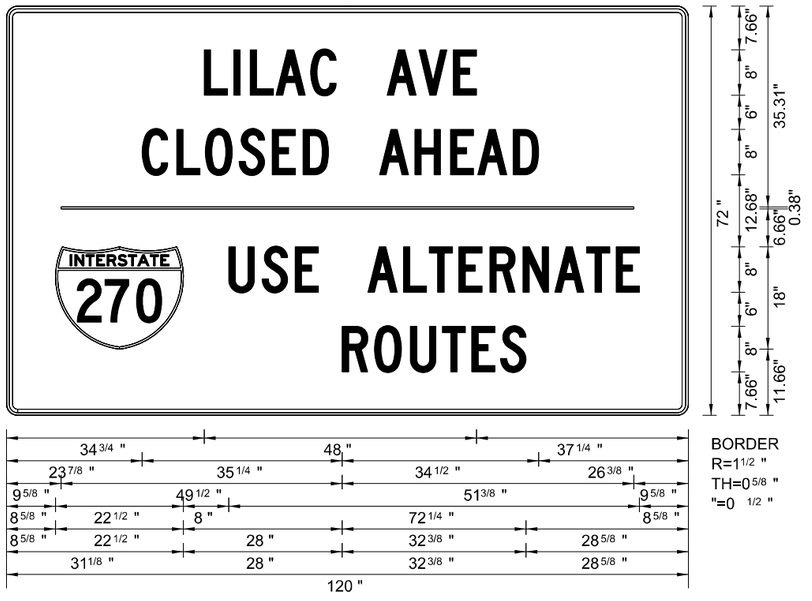

Panel Style: construction_guide.ssi
M.U.T.C.D.:: 2009 Edition

104

NOT TO SCALE

STATE OF MISSOURI
JONATHAN R. LOOS NUMBER PE-2010020226
PROFESSIONAL ENGINEER

DATE PREPARED
3/20/2026

ROUTE	STATE
I-270	MO
DISTRICT	SHEET NO.
STL	42

COUNTY
ST. LOUIS

JOB NO.
J6I3020D

CONTRACT ID.

PROJECT NO.

BRIDGE NO.

DESCRIPTION	DATE

IF A SEAL IS PRESENT ON THIS SHEET IT HAS BEEN ELECTRONICALLY SEALED AND DATED.

MISSOURI HIGHWAYS AND TRANSPORTATION COMMISSION
MoDOT
105 WEST CAPITOL
JEFFERSON CITY, MO 65102
1-888-ASK-MODOT (1-888-275-6636)

HORNER SHIFRIN
401 S. 18TH ST., STE. 400 ST. LOUIS, MO 63103
314-241-4844 FAX 314-241-4895
WWW.HORNERSHIFRIN.COM
DISCIPLINE: PROFESSIONAL ENGINEERING
CERTIFICATE OF AUTHORITY: 000159
EXPIRATION DATE: DECEMBER 31, 2026

TRAFFIC CONTROL PLAN
DETOUR SIGN DETAILS
DETOUR SHEET 2 OF 5

REV.



TEMPORARY TRAFFIC CONTROL
SOUTHBOUND LILAC DETOUR
DETOUR SHEET 3 OF 5

STATE OF MISSOURI
JONATHAN R. LOOS
NUMBER
PE 2017000326
PROFESSIONAL ENGINEER

DATE PREPARED	3/20/2026
ROUTE	I-270
STATE	MO
DISTRICT	STL
SHEET NO.	43
COUNTY	ST. LOUIS
JOB NO.	J6I3020D
CONTRACT ID.	.
PROJECT NO.	.
BRIDGE NO.	.

DATE	DESCRIPTION
.	.
.	.
.	.
.	.
.	.
.	.

MISSOURI HIGHWAYS AND TRANSPORTATION COMMISSION

MoDOT

105 WEST CAPITOL
JEFFERSON CITY, MO 65102
1-888-ASK-MODOT (1-888-275-6636)

HORNER SHIFRIN

401 S. 18TH ST., STE. 400 ST. LOUIS, MO 63103
314-531-4321 - FAX 314-531-6966
WWW.HORNERSHIFRIN.COM
DISCIPLINE: PROFESSIONAL ENGINEERING
CERTIFICATE OF AUTHORITY: 000159
EXPIRATION DATE: DECEMBER 31, 2026

IF A SEAL IS PRESENT ON THIS SHEET IT HAS BEEN ELECTRONICALLY SEALED AND DATED.

REV.

...\Southbound Lilac Detour Sheet 12:41:09 PM 3/20/2026



TEMPORARY TRAFFIC CONTROL
NORTHBOUND LILAC DETOUR
DETOUR SHEET 4 OF 5

STATE OF MISSOURI
JONATHAN R. LOOS
NUMBER
PE 2017000326
PROFESSIONAL ENGINEER

DATE PREPARED	3/20/2026
ROUTE	I-270
STATE	MO
DISTRICT	STL
SHEET NO.	44
COUNTY	ST. LOUIS
JOB NO.	J6I3020D
CONTRACT ID.	.
PROJECT NO.	.
BRIDGE NO.	.

DATE	DESCRIPTION
.	.
.	.
.	.
.	.
.	.
.	.
.	.

MISSOURI HIGHWAYS AND TRANSPORTATION COMMISSION

MoDOT

105 WEST CAPITOL
JEFFERSON CITY, MO 65102
1-888-ASK-MODOT (1-888-275-6636)

HORNER SHIFRIN

401 S. 18TH ST., STE. 400 ST. LOUIS, MO 63103
314-531-4321 - FAX 314-531-6966
WWW.HORNERSHIFRIN.COM
DISCIPLINE: PROFESSIONAL ENGINEERING
CERTIFICATE OF AUTHORITY: 000159
EXPIRATION DATE: DECEMBER 31, 2026

IF A SEAL IS PRESENT ON THIS SHEET IT HAS BEEN ELECTRONICALLY SEALED AND DATED.

REV.

...\Northbound Lilac Detour Sheet 12:42:28 PM 3/20/2026



TEMPORARY TRAFFIC CONTROL
LILAC BRIDGE DEMO DETOUR
SHEET 5 OF 5

STATE OF MISSOURI
JONATHAN R. LOOS
NUMBER PE-2010020326
PROFESSIONAL ENGINEER

DATE PREPARED
3/20/2026

ROUTE	STATE
I-270	MO
DISTRICT	SHEET NO.
STL	45

COUNTY
ST. LOUIS

JOB NO.
J6I3020D

CONTRACT ID.
.

PROJECT NO.
.

BRIDGE NO.
.

DESCRIPTION	DATE
.	.
.	.
.	.
.	.
.	.
.	.
.	.
.	.

IF A SEAL IS PRESENT ON THIS SHEET IT HAS BEEN ELECTRONICALLY SEALED AND DATED.

MISSOURI HIGHWAYS AND TRANSPORTATION COMMISSION

MoDOT

105 WEST CAPITOL
JEFFERSON CITY, MO 65102
1-888-ASK-MODOT (1-888-275-6636)

HORNER SHIFRIN
401 S. 18TH ST., STE. 400 ST. LOUIS, MO 63103
314-241-1976 FAX: 314-241-1406
WWW.HORNERSHIFRIN.COM
DISCIPLINE: PROFESSIONAL ENGINEERING
CERTIFICATE OF AUTHORITY: 000159
EXPIRATION DATE: DECEMBER 31, 2026

...\Lilac Bridge Demo Detour Sheet 12:42:46 PM 3/20/2026

NOTES:

ALL DEVICES SHALL COMPLY WITH MUTCD, 11TH EDITION.

CONCRETE BARRIER MAY BE INSTALLED AT AN 8:1 FLARE RATE FROM THE SHOULDER POINT TO THE LIMITS OF THE CLEAR ZONE WHERE THE SIDE SLOPE IS 6:1 OR FLATTER.

FINAL SIGN AND DEVICE LOCATIONS WILL BE FIELD VERIFIED AND MAY BE ADJUSTED ACCORDING TO FIELD CONDITIONS.

TAPER LENGTHS AND SPACING OF CHANNELIZING DEVICES						
SPEED (P) MPH	MINIMUM TAPER LENGTHS (L) FOR LANE WIDTHS (W)			MINIMUM SHOULDER TAPER LENGTH BASED ON 10' SHOULDER (T1)	MAXIMUM CHANNELIZER SPACING	
	10 FT	11 FT	12 FT		TAPERS	BUFFER/ WORK AREA
0-35	205 FT	225 FT	245 FT	70	35 FT	40 FT
40-45	450 FT	495 FT	540 FT	150	40 FT	80 FT
50-55	550 FT	605 FT	660 FT	185	50 FT	80 FT
60-70	700 FT	770 FT	840 FT	235	60 FT	120 FT

SIGN SPACING FOR ADVANCE SIGN SERIES (1) (2)		
SPEED (P) MPH		
	NON-DIVIDED HIGHWAYS (S)	DIVIDED HIGHWAYS (S)
0-35	200 FT	200 FT
40-45	350 FT	500 FT
50-55	500 FT	1000 FT
60-70	SA-1000 FT, SB-1500 FT, SC-2640 FT **	

(1) SPACING BETWEEN SIGNS AND SPACING BETWEEN LAST SIGN AND FLAGGER, BEGINNING OF TAPER, OR SIGNED CONDITION

(2) SPACINGS MAY BE ADJUSTED AS NECESSARY TO MEET FIELD CONDITIONS

LONGITUDINAL BUFFER SPACE	
SPEED (P) MPH	BUFFER SPACE (FEET)
0-35	280
40-45	400
50-55	560
60-70	840

TAPER LENGTH (L)

L = W X P FOR 40 MPH OR MORE

$L = \frac{WP^2}{60}$ FOR 35 MPH OR LESS

L = TAPER LENGTH IN FEET

W = LATERAL SHIFT IN FEET

P = POSTED SPEED PRIOR TO ROAD WORK IN MPH

NOT TO SCALE

STATE OF MISSOURI
JONATHAN R. LOOS NUMBER PE-2010030226
PROFESSIONAL ENGINEER

DATE PREPARED
3/20/2026

ROUTE	STATE
I-270	MO
DISTRICT	SHEET NO.
STL	46

COUNTY
ST. LOUIS

JOB NO.
J6I3020D

CONTRACT ID.
.

PROJECT NO.
.

BRIDGE NO.
.

DATE	DESCRIPTION
.	.
.	.
.	.
.	.
.	.
.	.
.	.
.	.

IF A SEAL IS PRESENT ON THIS SHEET IT HAS BEEN ELECTRONICALLY SEALED AND DATED.

MISSOURI HIGHWAYS AND TRANSPORTATION COMMISSION

105 WEST CAPITOL
JEFFERSON CITY, MO 65102
1-888-ASK-MODOT (1-888-275-6636)

HORNER SHIFRIN

401 S. 18TH ST., STE. 400 ST. LOUIS, MO 63103
314-644-7700 FAX 314-644-2066
WWW.HORNERSHIFRIN.COM
DISCIPLINE: PROFESSIONAL ENGINEERING
CERTIFICATE OF AUTHORITY: 000159
EXPIRATION DATE: DECEMBER 31, 2026

...\Typical Applications 12:43:50 PM 3/20/2026

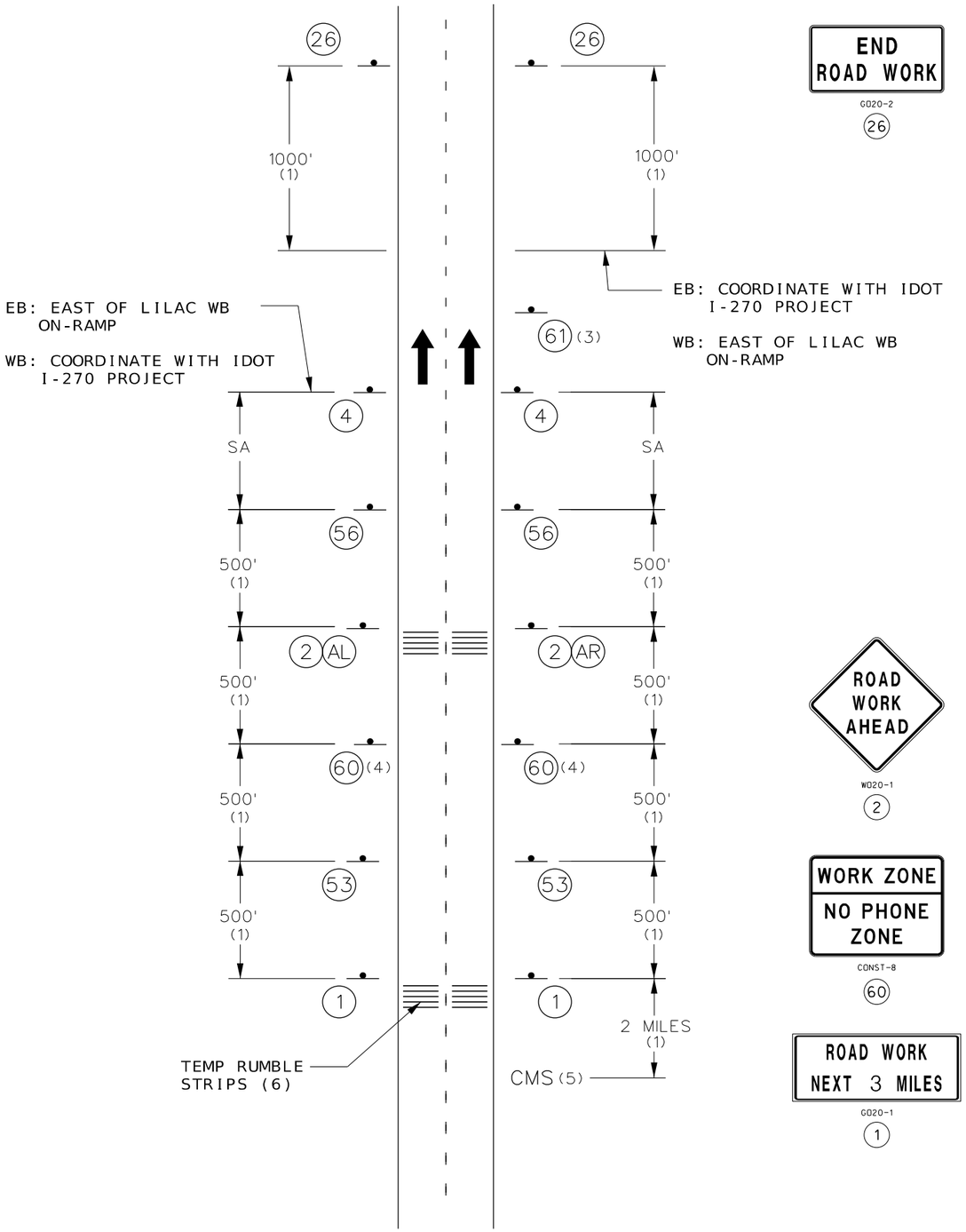

MULTI-LANE DIVIDED
BEGIN/END OF PROJECT SIGNING









NOTES:

SIGN 1 IS REQUIRED.

SIGN 26 IS USED ON ALL PROJECTS WHERE SIGN 1 IS USED.

OTHER SIGNS SUCH AS DETOUR OR ALTERNATE ROUTE SIGNING MAY BE USED OUTSIDE THE PROJECT LIMITS.

UNLESS NOTED ON PLANS, ANY EXISTING SIGNING THAT CONFLICTS WITH THE TRAFFIC CONTROL SIGNING SHALL BE COMPLETELY COVERED OR REMOVED.

SIGNS 4 AND 56 TO BE COVERED WHEN CONDITIONS REQUIRING THE REDUCED SPEED NO LONGER EXIST.

(1) DISTANCE MAY BE ADJUSTED ACCORDING TO FIELD CONDITIONS. WHERE TRAFFIC BACKUPS ARE EXPECTED BEYOND THE ADVANCE WARNING AREA, ADDITIONAL SIGNING MAY BE NEEDED.

(3) SIGN CONST-5-96 IS PLACED IN A VISIBLE AREA WITHIN THE PROJECT LIMITS PROVIDED ITS PLACEMENT DOES NOT DISRUPT A SEQUENCE OF SIGNS. IF A VISIBLE LOCATION WITHIN THE PROJECT IS NOT AVAILABLE, THE SIGN MAY BE PLACED 500 FEET BEFORE SIGN CONST-7-72 OR CONST-7-48.

(4) THE "WORK ZONE NO PHONE ZONE" SIGN IS PLACED A MINIMUM OF 500 FEET BEFORE THE ROAD WORK AHEAD SIGN.

(5) CHANGEABLE MESSAGE SIGN SHALL BE CONNECTED TO SMART WORK ZONE TECHNOLOGY.

(6) TEMPORARY RUMBLE STRIPS ARE LONG-TERM WITH FIVE (5) STRIPS SPACED 10 - 12 FT. ON CENTER. FIRST SET IS PLACED 200' IN FRONT OF SIGN 2. SECOND SET IS PLACED 1500' IN FRONT OF SIGN 2.

NOT TO SCALE

STATE OF MISSOURI
JONATHAN R. LOOS NUMBER PE-2010020226
PROFESSIONAL ENGINEER

DATE PREPARED
3/20/2026

ROUTE	STATE
I-270	MO
DISTRICT	SHEET NO.
STL	47

COUNTY
ST. LOUIS

JOB NO.
J6I3020D

CONTRACT ID.
.

PROJECT NO.
.

BRIDGE NO.
.

DESCRIPTION	DATE
.	.
.	.
.	.
.	.
.	.
.	.
.	.
.	.

IF A SEAL IS PRESENT ON THIS SHEET IT HAS BEEN ELECTRONICALLY SEALED AND DATED.

MISSOURI HIGHWAYS AND TRANSPORTATION COMMISSION
105 WEST CAPITOL
JEFFERSON CITY, MO 65102
1-888-ASK-MODOT (1-888-275-6636)

HORNER SHIFRIN
401 S. 18TH ST., STE. 400 ST. LOUIS, MO 63103
314-241-1976 FAX 314-241-1988
WWW.HORNERSHIFRIN.COM
DISCIPLINE: PROFESSIONAL ENGINEERING
CERTIFICATE OF AUTHORITY: 000159
EXPIRATION DATE: DECEMBER 31, 2026

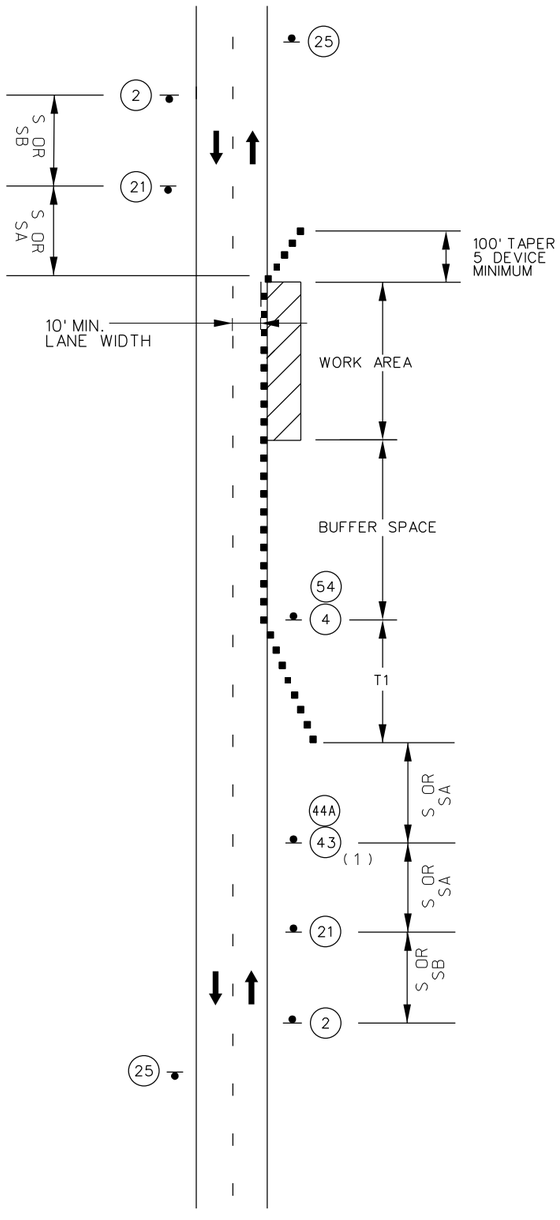

TWO LANE UNDIVIDED
SHOULDER WORK
MINOR TRAVELWAY ENCROACHMENT

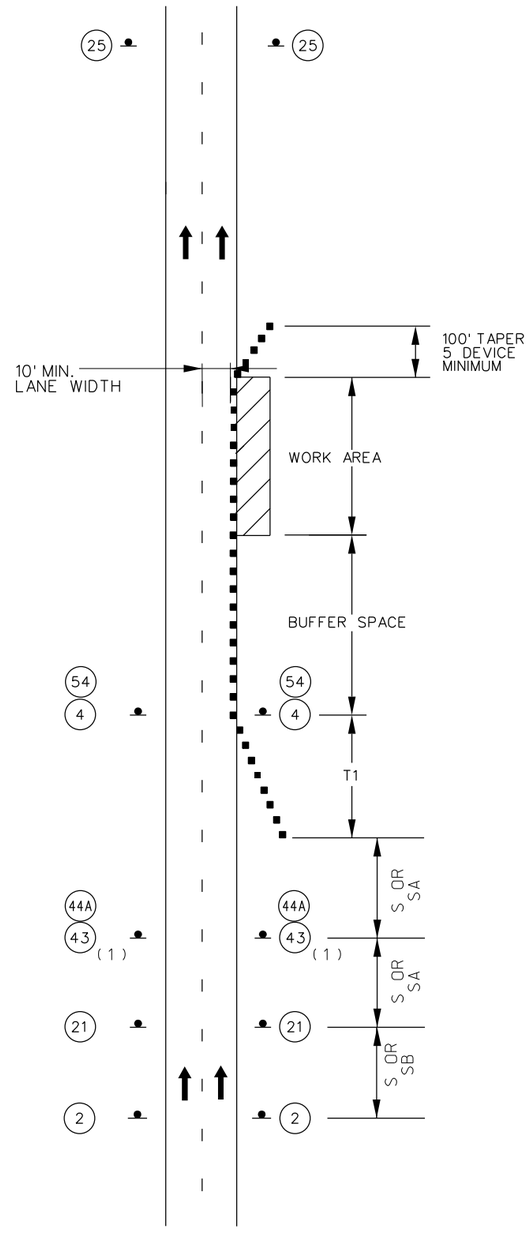

MULTI-LANE DIVIDED
SHOULDER WORK
MINOR TRAVELWAY ENCROACHMENT



W020-1
2



W025-6



W021-5b
21



W05-1
43



W07-3a
44A



R2-1
4



R2-1
NORMAL SPEED
25



G020-5aP
54

CHANNELIZERS

NOTES:

REFER TO SHEET 43 FOR SIGN SPACING, DEVICE SPACING AND CHANNELIZING TAPER LENGTHS.

SIGN 2 NOT REQUIRED IF SHOULDER WORK IS LOCATED WITHIN THE LIMITS OF AN ACTIVITY AREA WHERE ANOTHER SIGN 2 IS ALREADY USED.

THE PROTECTIVE VEHICLE MAY BE OMITTED IF A TAPER AND CHANNELIZING DEVICES ARE USED.

VEHICLE- MOUNTED SIGNS SHALL BE MOUNTED IN A MANNER SUCH THAT THEY ARE NOT OBSCURED BY EQUIPMENT OR SUPPLIES. SIGN LEGEND ON VEHICLE-MOUNTED SIGNS SHALL BE COVERED OR TURNED FROM VIEW WHEN WORK IS NOT IN PROGRESS.

VEHICLE HAZARD WARNING SIGNALS SHALL NOT BE USED INSTEAD OF THE VEHICLE'S HIGH -INTENSITY ROTATING FLASHING, FLASHING, OSCILLATING, OR STROBE LIGHTS.

SHADOW AND WORK VEHICLES SHALL DISPLAY HIGH-DENSITY ROTATING, FLASHING, OSCILLATING, OR STROBE LIGHTS.

(1). SIGN 44A NOT REQUIRED FOR NARROW LANE SECTIONS LESS THAN ONE MILE.

NOT TO SCALE

STATE OF MISSOURI
JONATHAN R. LOOS NUMBER PE-2010020326
PROFESSIONAL ENGINEER

DATE PREPARED
3/20/2026

ROUTE	STATE
I-270	MO
DISTRICT	SHEET NO.
STL	48

COUNTY
ST. LOUIS

JOB NO.
J613020D

CONTRACT ID.
.

PROJECT NO.
.

BRIDGE NO.
.

DESCRIPTION	DATE
.	.
.	.
.	.
.	.
.	.
.	.
.	.
.	.

IF A SEAL IS PRESENT ON THIS SHEET IT HAS BEEN ELECTRONICALLY SEALED AND DATED.

MISSOURI HIGHWAYS AND TRANSPORTATION COMMISSION
105 WEST CAPITOL
JEFFERSON CITY, MO 65102
1-888-ASK-MODOT (1-888-275-6636)

HORNER SHIFRIN
401 S. 18TH ST., STE. 400 ST. LOUIS, MO 63103
314-241-1976 FAX 314-241-1988
WWW.HORNERSHIFRIN.COM
DISCIPLINE: PROFESSIONAL ENGINEERING
CERTIFICATE OF AUTHORITY: 000159
EXPIRATION DATE: DECEMBER 31, 2026

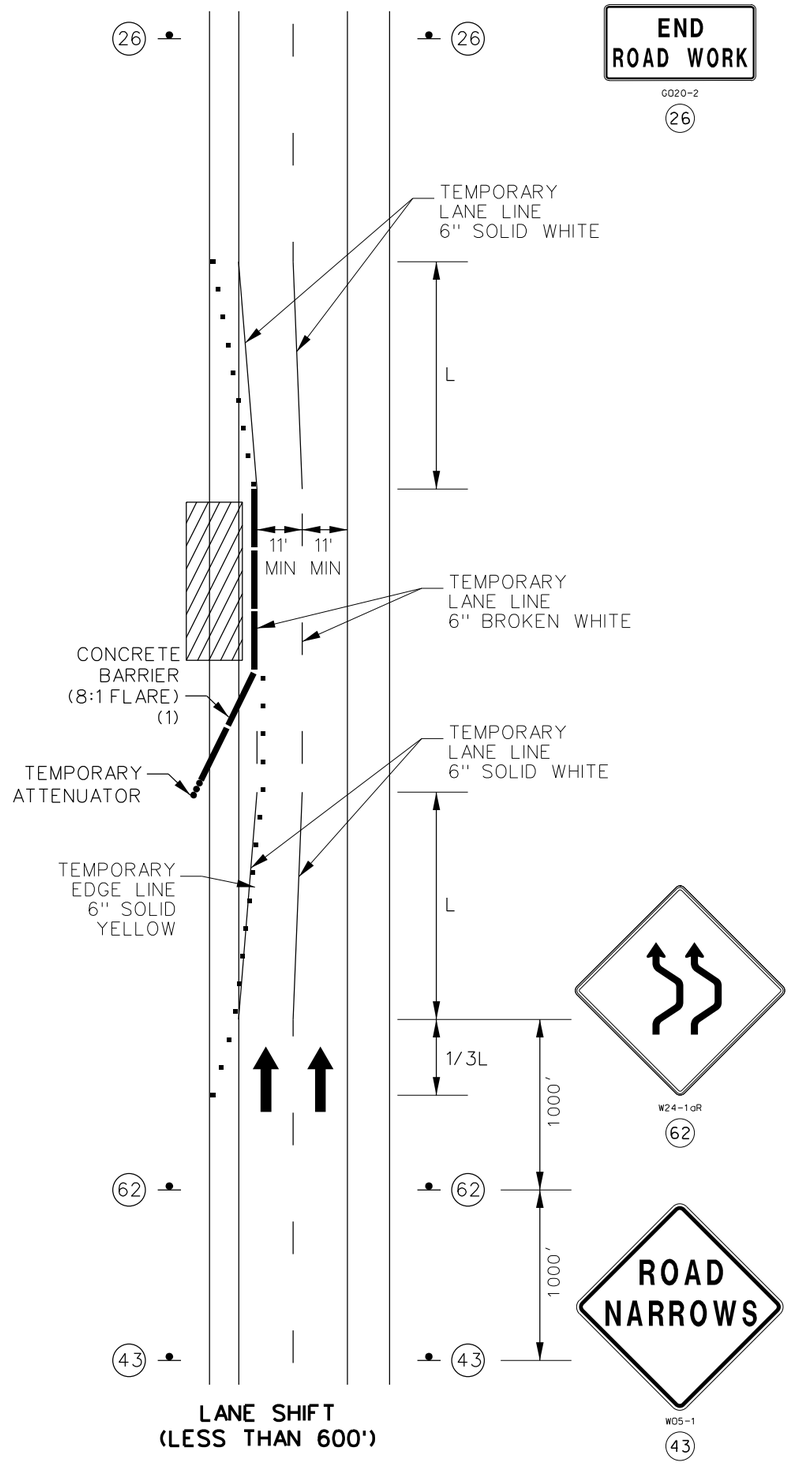

LANE SHIFT
(LESS THAN 600')

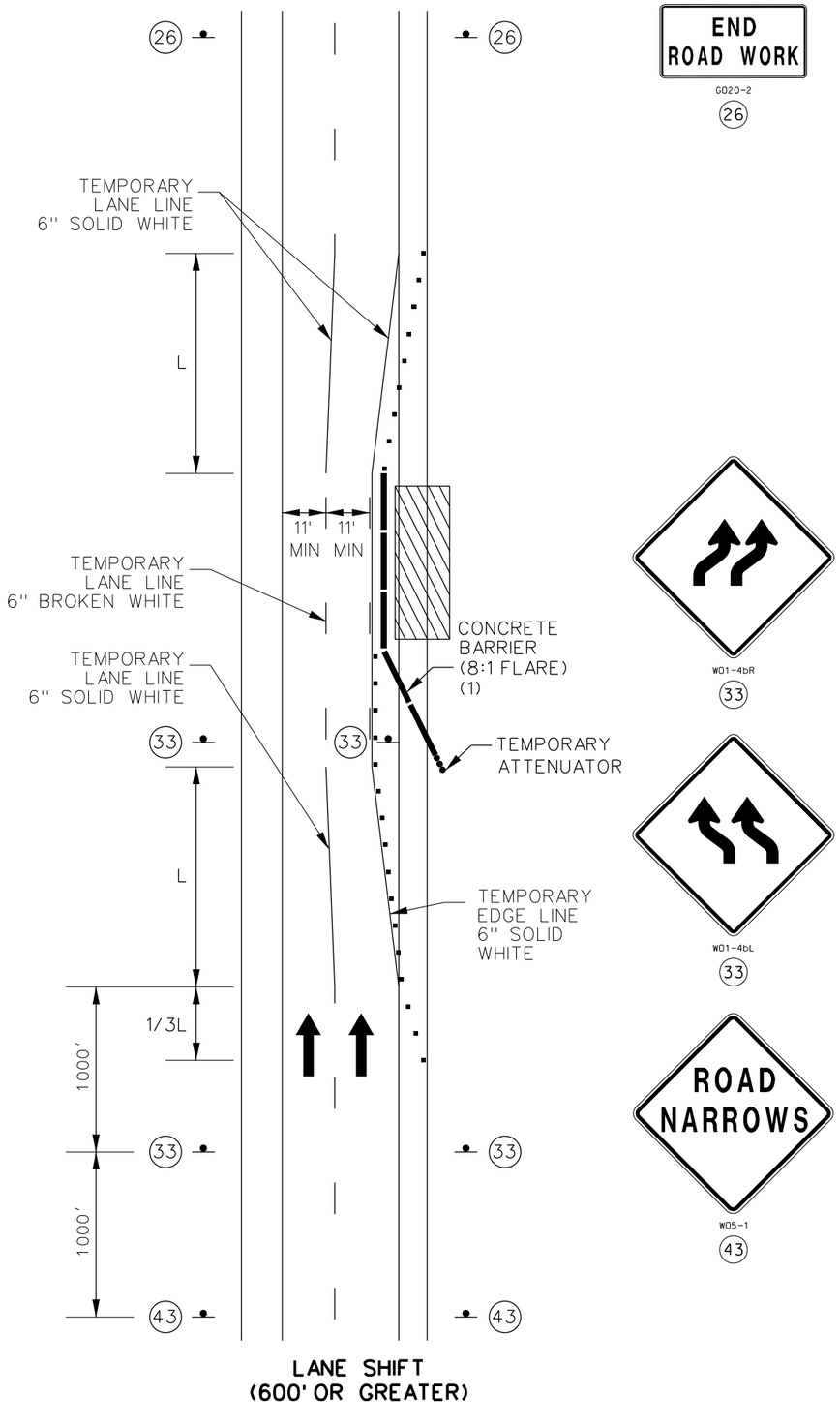

LANE SHIFT
(600' OR GREATER)

NOTES:

EXISTING STRIPING IN CONFLICT WITH TEMPORARY STRIPING SHALL BE REMOVED.

THE NUMBER OF LANES ILLUSTRATED ON THE REVERSE CURVE SIGNS SHALL BE THE SAME AS THE NUMBER OF THROUGH LANES AVAILABLE TO ROAD USERS, AND THE DIRECTION OF THE REVERSE CURVES SHALL BE APPROPRIATELY ILLUSTRATED.

WHERE TWO OR MORE LANES ARE BEING SHIFTED, A W1-4 (OR W1-3) SIGN WITH AN ALL LANES (W24-1cP) PLAQUE MAY BE USED INSTEAD OF A SIGN THAT ILLUSTRATES THE NUMBER OF LANES.

REFER TO SHEET 43 FOR SIGN SPACING, DEVICE SPACING AND CHANNELIZING TAPER LENGTHS.

CHANNELIZERS

NOT TO SCALE

STATE OF MISSOURI
JONATHAN R. LOOS
NUMBER
PE 2017000326
PROFESSIONAL ENGINEER

DATE PREPARED	3/20/2026
ROUTE	I-270
STATE	MO
DISTRICT	STL
SHEET NO.	49
COUNTY	ST. LOUIS
JOB NO.	J6I3020D
CONTRACT ID.	.
PROJECT NO.	.
BRIDGE NO.	.

DESCRIPTION

DATE

MISSOURI HIGHWAYS AND TRANSPORTATION COMMISSION

MoDOT

105 WEST CAPITOL
JEFFERSON CITY, MO 65102
1-888-ASK-MODOT (1-888-275-6636)

HORNER SHIFRIN

401 S. 18TH ST., STE. 400 ST. LOUIS, MO 63103
314-531-4321 • FAX 314-531-6966
WWW.HORNERSHIFRIN.COM
DISCIPLINE: PROFESSIONAL ENGINEERING
CERTIFICATE OF AUTHORITY: 000159
EXPIRATION DATE: DECEMBER 31, 2026

IF A SEAL IS PRESENT ON THIS SHEET IT HAS BEEN ELECTRONICALLY SEALED AND DATED.

...\Typical Applications 12:43:51 PM 3/20/2026

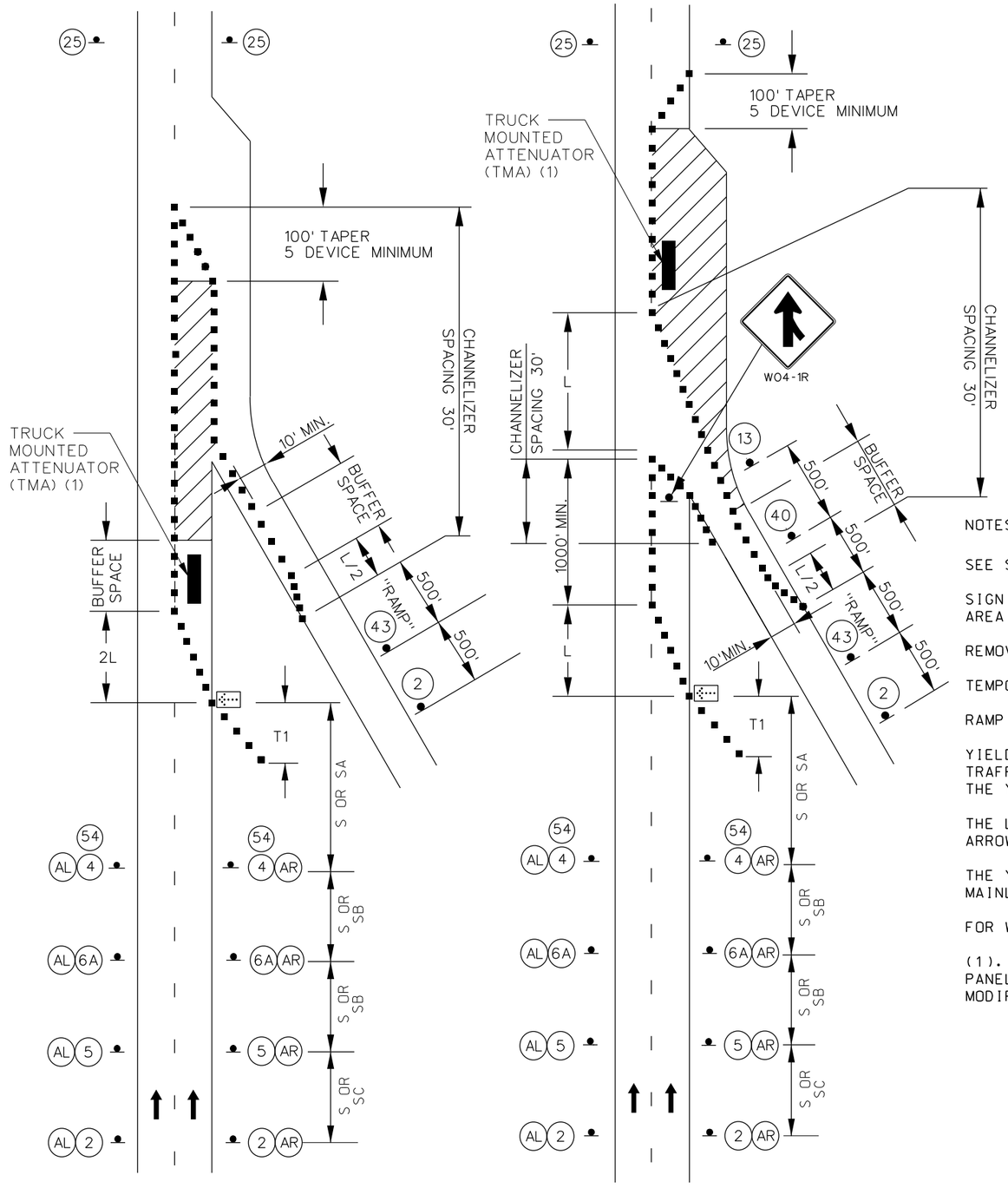

LANE CLOSURE
ENTRANCE RAMP AREAS

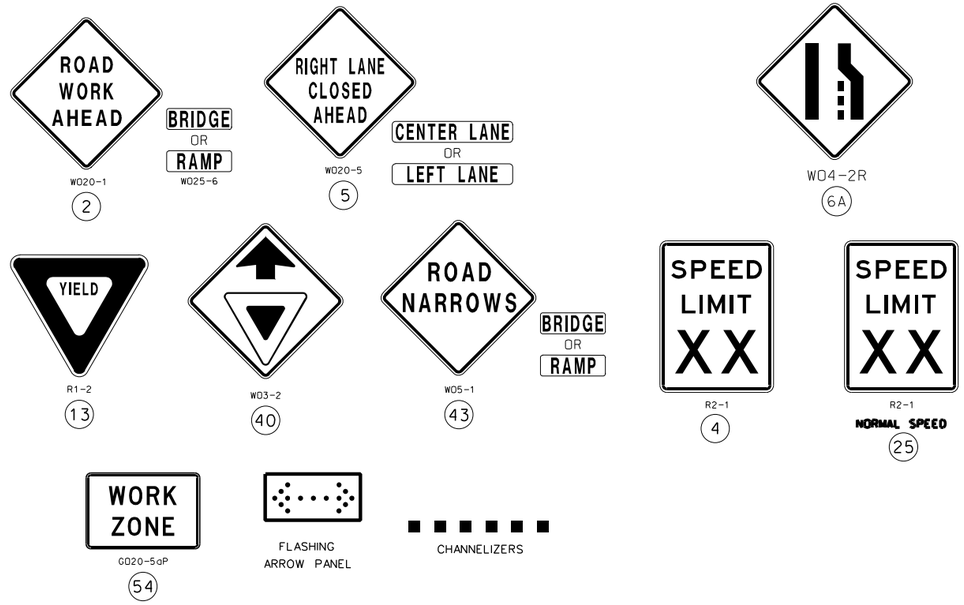

NOTES:

SEE SHEET 43 FOR SIGN SPACING, DEVICE SPACING AND CHANNELIZING TAPER LENGTHS.

SIGN 2 NOT REQUIRED IF SHOULDER WORK IS LOCATED WITHIN THE LIMITS OF AN ACTIVITY AREA WHERE ANOTHER SIGN 2 IS ALREADY USED.

REMOVE AND/OR MODIFY EXISTING PAVEMENT MARKING AS NEEDED.

TEMPORARY PAVEMENT MARKING REQUIRED WITH LONG TERM LANE CLOSURES.

RAMP NARROWS SIGN IS REQUIRED WHEN RAMP WIDTH IS REDUCED.

YIELD SIGN SHOULD BE PLACED ON THE RAMP TO PROVIDE ADEQUATE VISIBILITY OF MAINLINE TRAFFIC. WHERE INADEQUATE ACCELERATION DISTANCE EXISTS FOR THE TEMPORARY ENTRANCE, THE YIELD SIGN SHALL BE REPLACED WITH STOP SIGNS (ONE EACH SIDE OF THE APPROACH).

THE LOCATION OF THE SIGN SEQUENCE AND MERGE TAPER SHOULD BE ADJUSTED SO THAT THE ARROW PANEL LOCATION IS NOT CONFUSING TO MOTORISTS ON THE RAMP.

THE YIELD SIGN SHOULD BE PLACED ON THE RAMP TO PROVIDE ADEQUATE VISIBILITY OF MAINLINE TRAFFIC.

FOR WORK ZONES WHERE DEVICES ARE IN PLACE OVER NIGHT, USE TRIM-LINE CHANNELIZERS.

(1). PROTECTIVE VEHICLE SHALL CONSIST OF TMA WITH WITH FLASHING ARROW PANEL. POSITION TMA AT LEAST 150' IN ADVANCE OF WORK SPACE. TMA LOCATION TO BE MODIFIED PER LOCATION OF CONSTRUCTION ACTIVITIES, IF REQUIRED.

STATE OF MISSOURI
JONATHAN R. LOOS
NUMBER
PE 2017020326
PROFESSIONAL ENGINEER

DATE PREPARED	5/1/2026
ROUTE	I-270
STATE	MO
DISTRICT	STL
SHEET NO.	50
COUNTY	ST. LOUIS
JOB NO.	J6I3020D
CONTRACT ID.	.
PROJECT NO.	.
BRIDGE NO.	.

DESCRIPTION

DATE

MISSOURI HIGHWAYS AND TRANSPORTATION COMMISSION

MoDOT

105 WEST CAPITOL
JEFFERSON CITY, MO 65102
1-888-ASK-MODOT (1-888-275-6636)

HORNER SHIFRIN

401 S. 18TH ST., STE. 400 ST. LOUIS, MO 63103
314-531-4321 • FAX 314-531-6966
WWW.HORNERSHIFRIN.COM
DISCIPLINE: PROFESSIONAL ENGINEERING
CERTIFICATE OF AUTHORITY: 000159
EXPIRATION DATE: DECEMBER 31, 2026

IF A SEAL IS PRESENT ON THIS SHEET IT HAS BEEN ELECTRONICALLY SEALED AND DATED.

...\Typical Applications 10:58:01 AM 5/1/2026

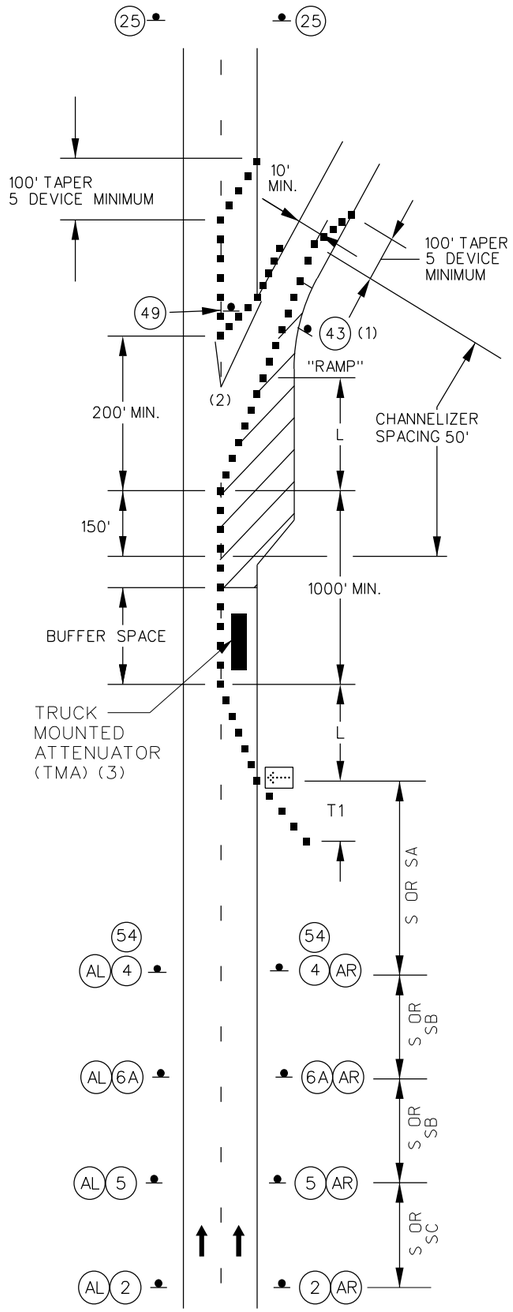

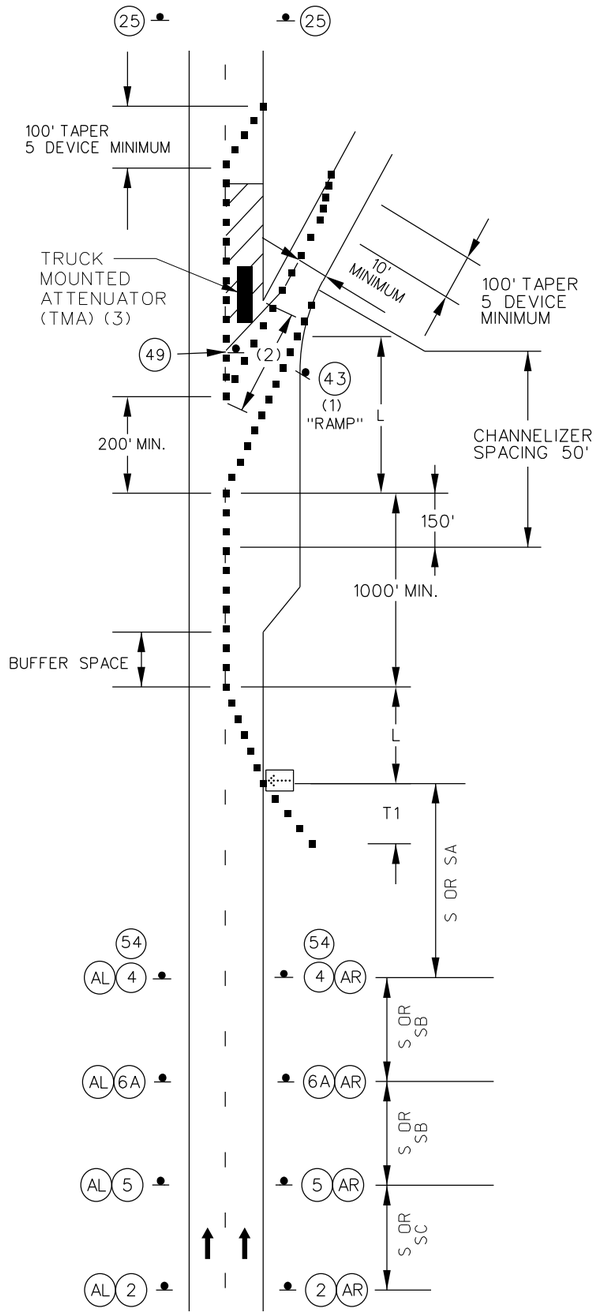

WORK IN THE VICINITY
OF A EXIT RAMP AREAS







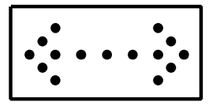

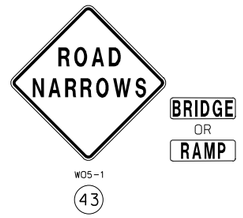











NOTES:

SEE SHEET 43 FOR SIGN SPACING, DEVICE SPACING AND CHANNELIZING TAPER LENGTHS.

SIGN 2 NOT REQUIRED IF SHOULDER WORK IS LOCATED WITHIN THE LIMITS OF AN ACTIVITY AREA WHERE ANOTHER SIGN 2 IS ALREADY USED.

REMOVE AND/OR MODIFY EXISTING PAVEMENT MARKING AS NEEDED.

TEMPORARY PAVEMENT MARKING REQUIRED WITH LONG TERM LANE CLOSURES.

(1). SIGN 43 REQUIRED WHEN RAMP WIDTH IS REDUCED.

(2). FIVE CHANNELIZER DEVICE MINIMUM.

(3). PROTECTIVE VEHICLE SHALL CONSIST OF TMA WITH WITH FLASHING ARROW PANEL. POSITION TMA AT LEAST 150' IN ADVANCE OF WORK SPACE, IF REQUIRED.

STATE OF MISSOURI
JONATHAN H. LOOS NUMBER PE-2010020326
PROFESSIONAL ENGINEER

DATE PREPARED
5/1/2026

ROUTE	STATE
I-270	MO
DISTRICT	SHEET NO.
STL	51

COUNTY
ST. LOUIS

JOB NO.
J6I3020D

CONTRACT ID.
.

PROJECT NO.
.

BRIDGE NO.
.

DESCRIPTION	DATE
.	.
.	.
.	.
.	.
.	.
.	.
.	.
.	.

IF A SEAL IS PRESENT ON THIS SHEET IT HAS BEEN ELECTRONICALLY SEALED AND DATED.

MISSOURI HIGHWAYS AND TRANSPORTATION COMMISSION
105 WEST CAPITOL
JEFFERSON CITY, MO 65102
1-888-ASK-MODOT (1-888-275-6636)

HORNER SHIFRIN
401 S. 18TH ST., STE. 400 ST. LOUIS, MO 63103
314-241-1976 FAX 314-241-1988
WWW.HORNERSHIFRIN.COM
DISCIPLINE: PROFESSIONAL ENGINEERING
CERTIFICATE OF AUTHORITY: 000159
EXPIRATION DATE: DECEMBER 31, 2026

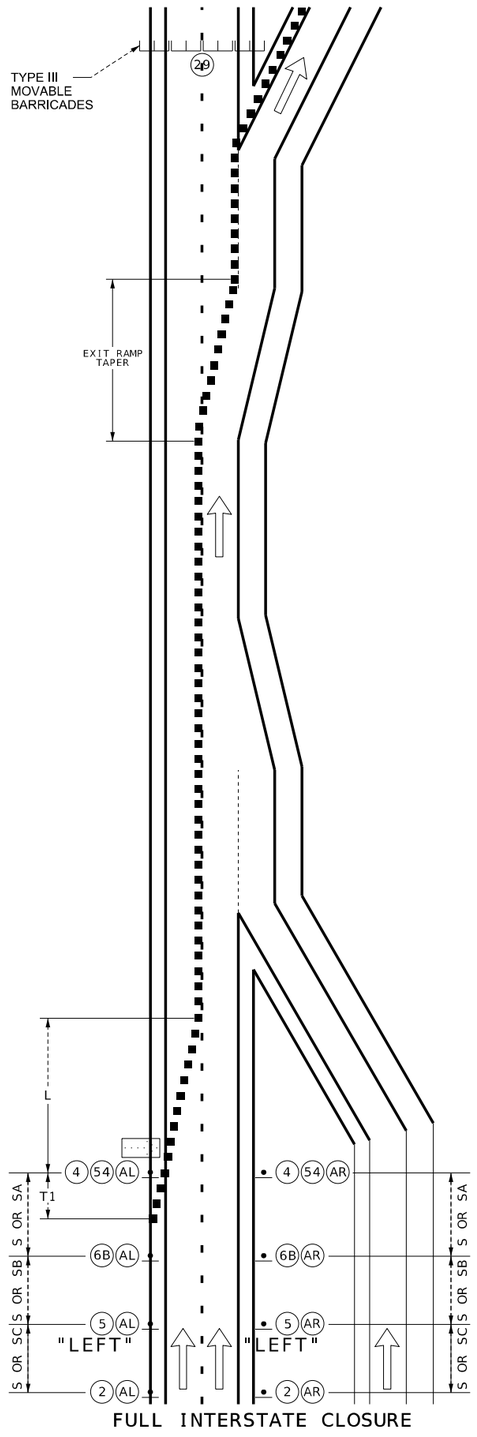

FULL INTERSTATE CLOSURE

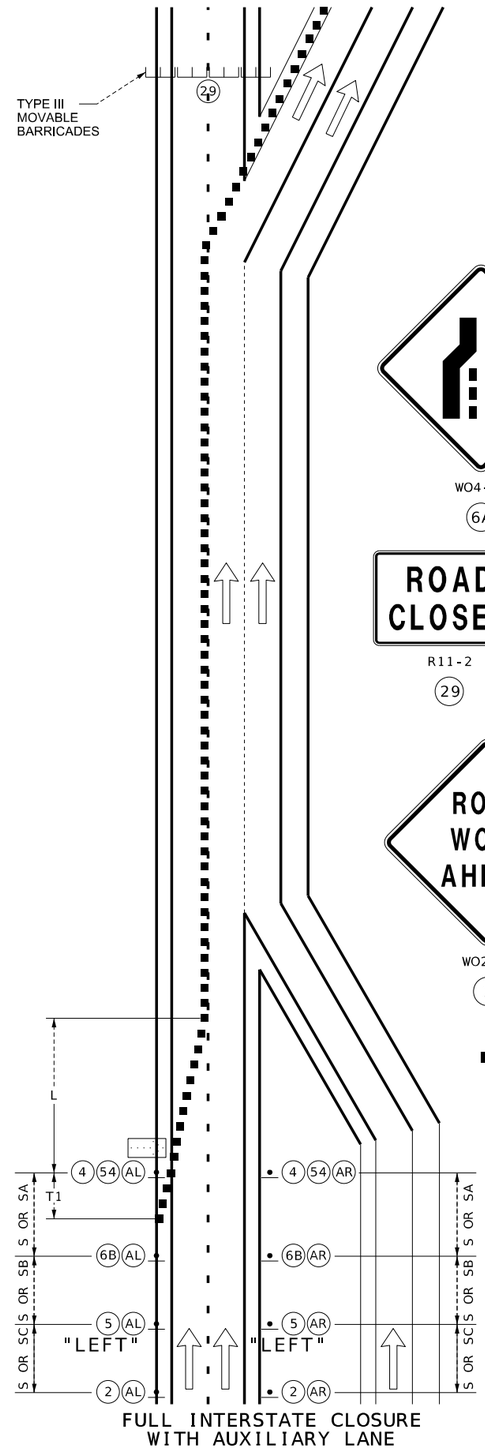

FULL INTERSTATE CLOSURE
WITH AUXILIARY LANE



NOTES:

EXISTING STRIPING IN CONFLICT WITH TEMPORARY STRIPING SHALL BE REMOVED.

REFER TO SHEET 43 FOR SIGN SPACING, DEVICE SPACING AND CHANNELIZING TAPER LENGTHS.

NOT TO SCALE

STATE OF MISSOURI
JONATHAN R. LOOS
NUMBER
PE 2017020326
PROFESSIONAL ENGINEER

DATE PREPARED	5/1/2026
ROUTE	I-270
STATE	MO
DISTRICT	STL
SHEET NO.	52
COUNTY	ST. LOUIS
JOB NO.	J6I3020D
CONTRACT ID.	.
PROJECT NO.	.
BRIDGE NO.	.

DATE	DESCRIPTION
.	.

MISSOURI HIGHWAYS AND TRANSPORTATION COMMISSION

MoDOT

105 WEST CAPITOL
JEFFERSON CITY, MO 65102
1-888-ASK-MODOT (1-888-275-6636)

HORNER SHIFRIN

401 S. 18TH ST., STE. 400 ST. LOUIS, MO 63103
314-531-4321 - FAX 314-531-6966
WWW.HORNERSHIFRIN.COM
DISCIPLINE: PROFESSIONAL ENGINEERING
CERTIFICATE OF AUTHORITY: 000159
EXPIRATION DATE: DECEMBER 31, 2026

IF A SEAL IS PRESENT ON THIS SHEET IT HAS BEEN ELECTRONICALLY SEALED AND DATED.

...\Typical Applications 10:58:02 AM 5/1/2026

TEMPORARY EROSION CONTROL LEGEND

- (A) ALTERNATE DITCH CHECK
- (C) INLET CHECK
- (R) ROCK DITCH CHECK
- (S) SEDIMENT TRAP
- SILT FENCE

SCALE

0 50 100 150

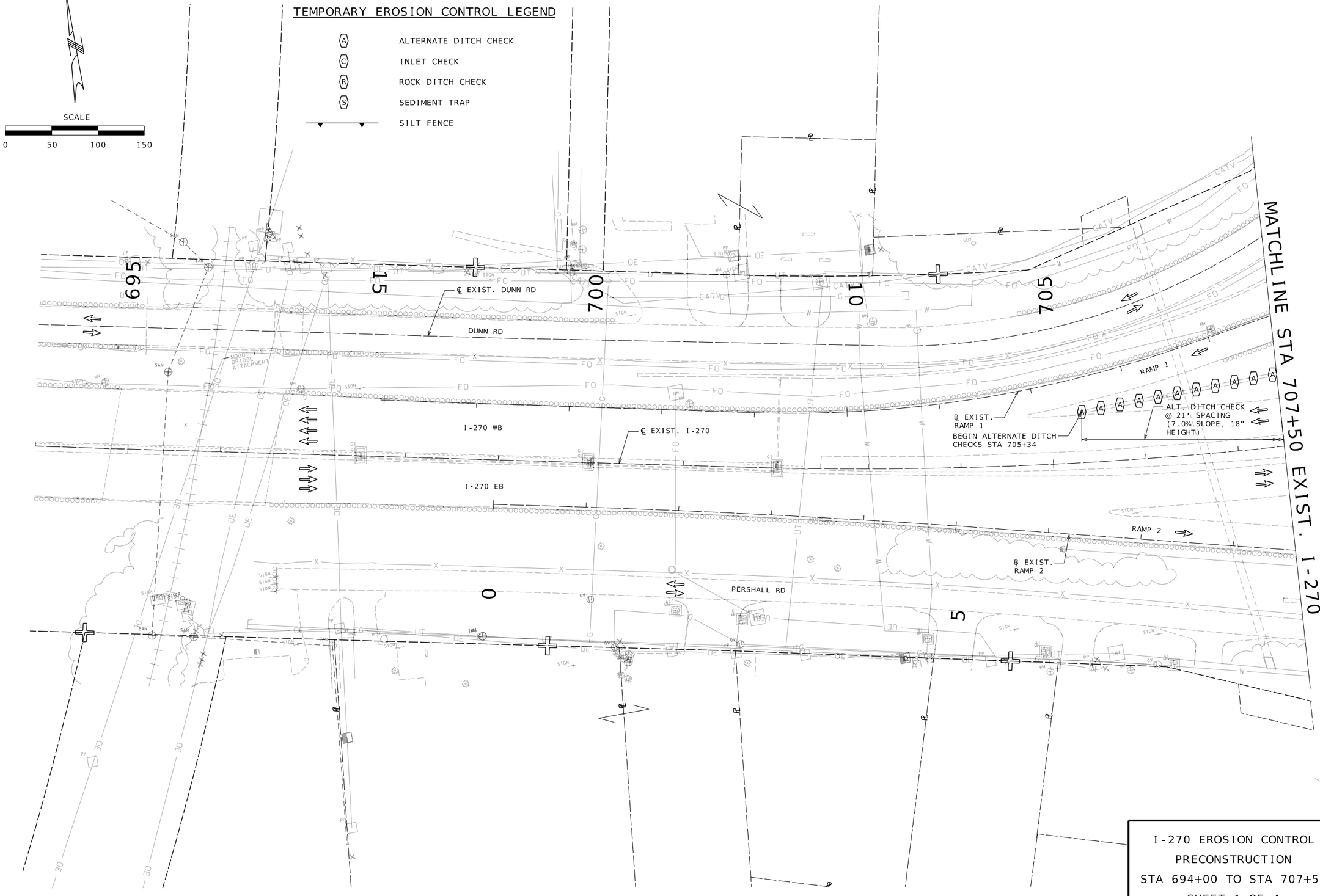

I-270 EROSION CONTROL
PRECONSTRUCTION
STA 694+00 TO STA 707+50
SHEET 1 OF 4

STATE OF MISSOURI
EUGENE LOUIS KUEKER JR.
NUMBER PE-2010000912
PROFESSIONAL ENGINEER

THIS SHEET HAS BEEN SIGNED, SEALED, AND DATED ELECTRONICALLY.

DATE PREPARED 3/25/2026

ROUTE	STATE
I-270	MO
DISTRICT	SHEET NO.
SL	53

COUNTY: ST. LOUIS
JOB NO.: J6I3020D
CONTRACT ID.:
PROJECT NO.:
BRIDGE NO.:

DATE	DESCRIPTION

IF A SEAL IS PRESENT ON THIS SHEET IT HAS BEEN ELECTRONICALLY SEALED AND DATED.

MISSOURI HIGHWAYS AND TRANSPORTATION COMMISSION
105 WEST CAPITOL
JEFFERSON CITY, MO 65102
1-888-ASK-MODOT (1-888-275-6636)

HDR Engineering, Inc.
1001 Highlands Plaza Drive
Suite 200
St. Louis, MO 63110-1337
314-425-8300
Certificate of Authority: 000856

MATCHLINE STA 707+50

MATCHLINE STA 721+00 EXIST. I-270

DUNN RD

LILAC AVE

℄ EXIST. DUNN RD

℄ EXIST. RAMP 3

RAMP 3

RAMP 1

℄ EXIST. RAMP 1

ALT. DITCH CHECK
@ 21' SPACING
(7.0% SLOPE, 18"
HEIGHT)

END ALTERNATE DITCH
CHECKS STA 707+88

(SEE LILAC AVE
PRECONSTRUCTION
EROSION CONTROL
SHEET FOR DETAILS)

ALT. DITCH CHECK
@ 300' SPACING
(0.5% SLOPE, 18"
HEIGHT)

BEGIN ALTERNATE DITCH
CHECKS STA 715+20

END ALTERNATE DITCH
CHECKS STA 718+20

I-270 WB

I-270 EB

℄ EXIST. I-270

RAMP 2

℄ EXIST. RAMP 2

RAMP 4

℄ EXIST. RAMP 4

PERSHALL RD

(SEE LILAC AVE
PRECONSTRUCTION
EROSION CONTROL
SHEET FOR DETAILS)

℄ EXIST.
LILAC AVE

1 RISER

SCALE
0 50 100 150

TEMPORARY EROSION CONTROL LEGEND

- (A) ALTERNATE DITCH CHECK
- (C) INLET CHECK
- (R) ROCK DITCH CHECK
- (S) SEDIMENT TRAP
- SILT FENCE

I-270 EROSION CONTROL PRECONSTRUCTION STA 707+50 TO STA 721+00 SHEET 2 OF 4

STATE OF MISSOURI
EUGENE LOUIS KUEKER JR.
NUMBER PE-2010000912
PROFESSIONAL ENGINEER

THIS SHEET HAS BEEN SIGNED, SEALED, AND DATED ELECTRONICALLY.

IF A SEAL IS PRESENT ON THIS SHEET IT HAS BEEN ELECTRONICALLY SEALED AND DATED.

DATE PREPARED: 3/25/2026

ROUTE	STATE
I-270	MO
DISTRICT	SHEET NO.
SL	54

COUNTY: ST. LOUIS

JOB NO.: J6I3020D

CONTRACT ID.:

PROJECT NO.:

BRIDGE NO.:

DATE	DESCRIPTION

MISSOURI HIGHWAYS AND TRANSPORTATION COMMISSION

105 WEST CAPITOL
JEFFERSON CITY, MO 65102
1-888-ASK-MODOT (1-888-275-6636)

HDR Engineering, Inc.
1001 Highlands Plaza Drive
Suite 200
St. Louis, MO 63110-1337
314-425-8300
Certificate of Authority: 000856

MATCHLINE STA 721+00 EXIST. I-270

MATCHLINE STA 734+50 EXIST. I-270

725

730

735

740

745

750

755

760

765

770

775

780

785

790

795

800

805

810

815

820

825

830

835

840

845

850

855

860

865

870

875

880

885

890

895

900

905

910

915

920

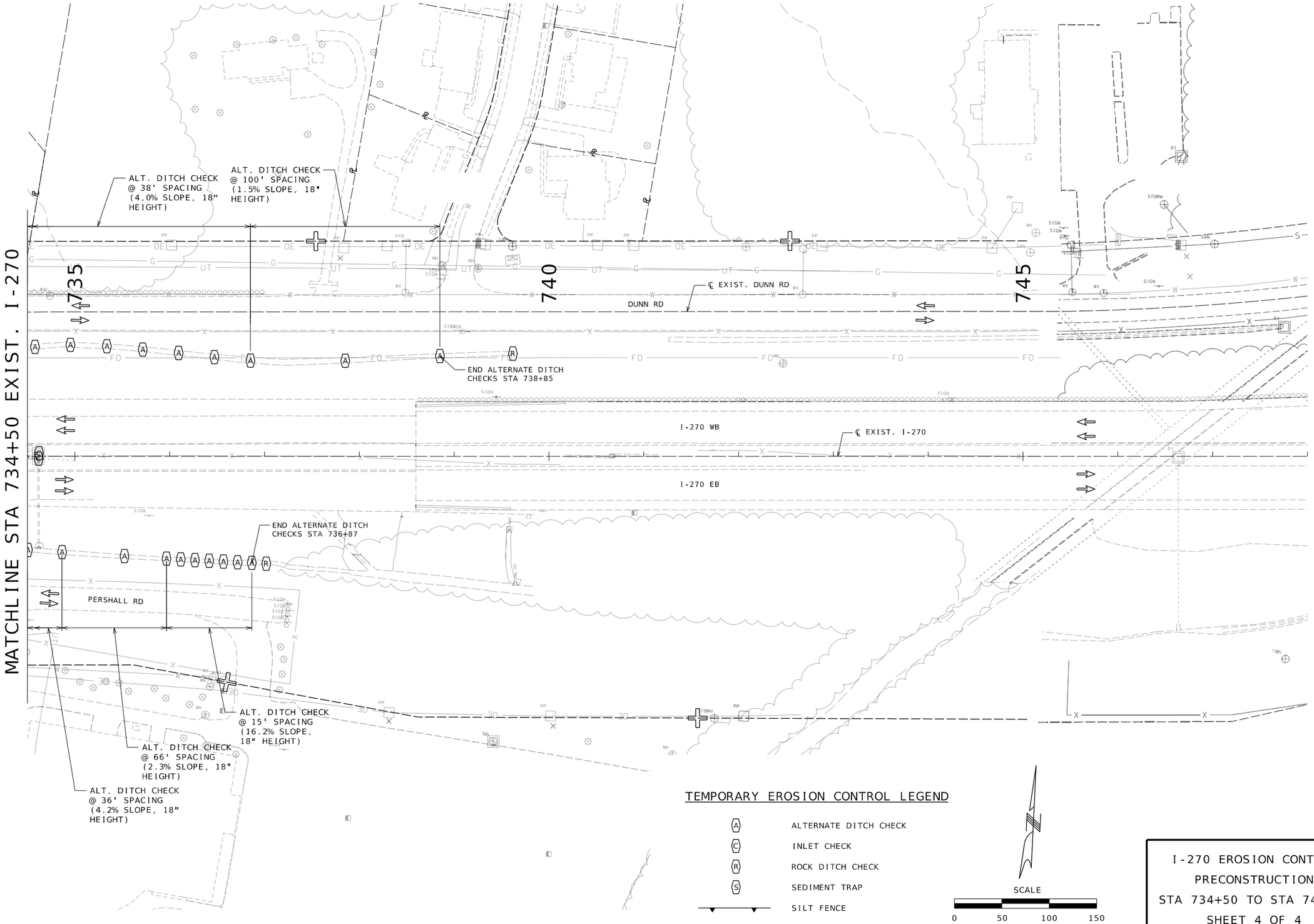

TEMPORARY EROSION CONTROL LEGEND

- (A) ALTERNATE DITCH CHECK
- (C) INLET CHECK
- (R) ROCK DITCH CHECK
- (S) SEDIMENT TRAP
- SILT FENCE

SCALE

0 50 100 150

I-270 EROSION CONTROL PRECONSTRUCTION STA 734+50 TO STA 748+00 SHEET 4 OF 4

STATE OF MISSOURI
EUGENE LOUIS KUELKER JR.
NUMBER PE-2011002912
PROFESSIONAL ENGINEER

THIS SHEET HAS BEEN SIGNED, SEALED, AND DATED ELECTRONICALLY.

DATE PREPARED 3/25/2026

ROUTE	STATE
I-270	MO
DISTRICT	SHEET NO.
SL	56

COUNTY: ST. LOUIS
JOB NO.: J6I3020D
CONTRACT ID.:
PROJECT NO.:
BRIDGE NO.:

DATE	DESCRIPTION

IF A SEAL IS PRESENT ON THIS SHEET IT HAS BEEN ELECTRONICALLY SEALED AND DATED.

MISSOURI HIGHWAYS AND TRANSPORTATION COMMISSION
105 WEST CAPITOL
JEFFERSON CITY, MO 65102
1-888-ASK-MODOT (1-888-275-6636)

HDR Engineering, Inc.
1001 Highlands Plaza Drive
Suite 200
St. Louis, MO 63110-1337
314-425-8300
Certificate of Authority: 000856

TEMPORARY EROSION CONTROL LEGEND

- (A) ALTERNATE DITCH CHECK
- (C) INLET CHECK
- (R) ROCK DITCH CHECK
- (S) SEDIMENT TRAP
- SILT FENCE

ALT. DITCH CHECK @ 72' SPACING (2.1% SLOPE, 18" HEIGHT)

BEGIN ALTERNATE DITCH CHECKS STA 11+56 ℄ EXIST. LILAC AVE

END ALTERNATE DITCH CHECKS STA 12+89 ℄ EXIST. LILAC AVE

ALT. DITCH CHECK @ 27' SPACING (5.5% SLOPE, 18" HEIGHT)

BEGIN ALTERNATE DITCH CHECKS STA 20+78 ℄ EXIST. LILAC AVE

END ALTERNATE DITCH CHECKS STA 21+84 ℄ EXIST. LILAC AVE

℄ EXIST. I-270

℄ EXIST. RAMP 3

℄ EXIST. RAMP 4

℄ EXIST. RAMP 1

℄ EXIST. RAMP 2

℄ EXIST. LILAC AVE

DUNN RD

PERSHALL RD

RAMP 1

RAMP 2

RAMP 3

RAMP 4

I-270 WB

I-270 EB

SCALE

0 50 100 150

LILAC AVE EROSION CONTROL
PRECONSTRUCTION
STA 9+00 TO STA 22+00
SHEET 1 OF 1

STATE OF MISSOURI
EUGENE LOUIS KUEKER JR.
NUMBER PE-2010000912
PROFESSIONAL ENGINEER

THIS SHEET HAS BEEN SIGNED, SEALED, AND DATED ELECTRONICALLY.

IF A SEAL IS PRESENT ON THIS SHEET IT HAS BEEN ELECTRONICALLY SEALED AND DATED.

DATE PREPARED	
3/25/2026	
ROUTE	STATE
I-270	MO
DISTRICT	SHEET NO.
SL	57
COUNTY	
ST. LOUIS	
JOB NO.	
J6I3020D	
CONTRACT ID.	
PROJECT NO.	
BRIDGE NO.	

DESCRIPTION	DATE

MISSOURI HIGHWAYS AND TRANSPORTATION COMMISSION

105 WEST CAPITOL
JEFFERSON CITY, MO 65102
1-888-ASK-MODOT (1-888-275-6636)

HDR Engineering, Inc.
1001 Highlands Plaza Drive
Suite 200
St. Louis, MO 63110-1337
314-425-8300
Certificate of Authority: 000856

TEMPORARY EROSION CONTROL LEGEND

- (A) ALTERNATE DITCH CHECK
- (C) INLET CHECK
- (R) ROCK DITCH CHECK
- (S) SEDIMENT TRAP
- [ ] PLACED IN PREVIOUS PHASE
- SILT FENCE
- TEMPORARY SEEDING & MULCHING

SCALE
0 50 100 150

℄ EXIST. DUNN RD
DUNN RD
MODOT I-15 BRIDGE ATTACHMENT
I-270 WB
℄ EXIST. I-270
I-270 EB
SILT FENCE
718 LF
PERSHALL RD
℄ EXIST. RAMP 1
RAMP 1
18" PIPE
BEGIN ALTERNATE DITCH CHECKS STA 705+57
RAMP 2
℄ EXIST. RAMP 2
ALT. DITCH CHECK @ 60' SPACING (2.5% SLOPE, 18" HEIGHT)
ALT. DITCH CHECK @ 25' SPACING (6.0% SLOPE, 18" HEIGHT)

MATCHLINE STA 707+50 EXIST. I-270

I-270 EROSION CONTROL
DURING CONSTRUCTION
STA 694+00 TO STA 707+50
SHEET 1 OF 4

STATE OF MISSOURI
EUGENE LOUIS KUEKER JR.
NUMBER PE-2010009912
PROFESSIONAL ENGINEER
THIS SHEET HAS BEEN SIGNED, SEALED, AND DATED ELECTRONICALLY.

IF A SEAL IS PRESENT ON THIS SHEET IT HAS BEEN ELECTRONICALLY SEALED AND DATED.

DATE PREPARED	
3/25/2026	
ROUTE	STATE
I-270	MO
DISTRICT	SHEET NO.
SL	58
COUNTY	
ST. LOUIS	
JOB NO.	
J6I3020D	
CONTRACT ID.	
PROJECT NO.	
BRIDGE NO.	

DESCRIPTION	DATE

MISSOURI HIGHWAYS AND TRANSPORTATION COMMISSION
105 WEST CAPITOL
JEFFERSON CITY, MO 65102
1-888-ASK-MODOT (1-888-275-6636)

HDR Engineering, Inc.
1001 Highlands Plaza Drive
Suite 200
St. Louis, MO 63110-1337
314-425-8300
Certificate of Authority: 000856

SCALE
0 50 100 150

MATCHLINE STA 707+50

MATCHLINE STA 721+00 EXIST. I-270

EXIST. I-270

DUNN RD

LILAC AVE

PERSHALL RD

℄ EXIST. DUNN RD

℄ EXIST. RAMP 1

℄ EXIST. RAMP 2

℄ EXIST. RAMP 3

℄ EXIST. RAMP 4

℄ EXIST. I-270

℄ EXIST. LILAC AVE

RAMP 1

RAMP 2

RAMP 3

RAMP 4

I-270 WB

I-270 EB

US SURVEY 112

US SURVEY 2007

710

715

720

ALT. DITCH CHECK @ 150' SPACING (0.3% SLOPE, 18" HEIGHT)

BEGIN ALTERNATE DITCH CHECKS STA 709+26

END ALTERNATE DITCH CHECKS STA 711+52

(SEE LILAC AVE DURING CONSTRUCTION EROSION CONTROL SHEET FOR DETAILS)

ALT. DITCH CHECK @ 282' SPACING (0.56% SLOPE, 18" HEIGHT)

BEGIN ALTERNATE DITCH CHECKS STA 713+74

ALT. DITCH CHECK @ 90' SPACING (1.7% SLOPE, 18" HEIGHT)

ALT. DITCH CHECK @ 30' SPACING (4.8% SLOPE, 18" HEIGHT)

END ALTERNATE DITCH CHECKS STA 708+67

BEGIN ALTERNATE DITCH CHECKS STA 709+16

END ALTERNATE DITCH CHECKS STA 711+51

BEGIN ALTERNATE DITCH CHECKS STA 713+31

END ALTERNATE DITCH CHECKS STA 717+50

BEGIN ALTERNATE DITCH CHECKS STA 718+46

END ALTERNATE DITCH CHECKS STA 718+88

ALT. DITCH CHECK @ 25' SPACING (6.0% SLOPE, 18" HEIGHT)

SILT FENCE 364 LF

ALT. DITCH CHECK @ 15' SPACING (13.0% SLOPE, 18" HEIGHT)

ALT. DITCH CHECK @ 130' SPACING (1.2% SLOPE, 18" HEIGHT)

ALT. DITCH CHECK @ 210' SPACING (0.8% SLOPE, 18" HEIGHT)

ALT. DITCH CHECK @ 43' SPACING (3.5% SLOPE, 18" HEIGHT)

18" PIPE

24" PIPE

12"x24" PIPE

TEMPORARY EROSION CONTROL LEGEND

- (A) ALTERNATE DITCH CHECK
- (C) INLET CHECK
- (R) ROCK DITCH CHECK
- (S) SEDIMENT TRAP
- ( ) PLACED IN PREVIOUS PHASE
- SILT FENCE
- TEMPORARY SEEDING & MULCHING

I-270 EROSION CONTROL DURING CONSTRUCTION STA 707+50 TO STA 721+00 SHEET 2 OF 4

STATE OF MISSOURI
EUGENE LOUIS KUELKER JR.
NUMBER PE-2010009912
PROFESSIONAL ENGINEER

THIS SHEET HAS BEEN SIGNED, SEALED, AND DATED ELECTRONICALLY.

IF A SEAL IS PRESENT ON THIS SHEET IT HAS BEEN ELECTRONICALLY SEALED AND DATED.

DATE PREPARED	
3/25/2026	
ROUTE	STATE
I-270	MO
DISTRICT	SHEET NO.
SL	59
COUNTY	
ST. LOUIS	
JOB NO.	
J6I3020D	
CONTRACT ID.	
PROJECT NO.	
BRIDGE NO.	

DATE	DESCRIPTION

MISSOURI HIGHWAYS AND TRANSPORTATION COMMISSION

105 WEST CAPITOL
JEFFERSON CITY, MO 65102
1-888-ASK-MODOT (1-888-275-6636)

HDR Engineering, Inc.
1001 Highlands Plaza Drive
Suite 200
St. Louis, MO 63110-1337
314-425-8300
Certificate of Authority: 000856

MATCHLINE STA 721+00 EXIST. I-270

MATCHLINE STA 734+50 EXIST. I-270

ALT. DITCH CHECK @ 90' SPACING (1.7% SLOPE, 18" HEIGHT)

℄ EXIST. RAMP 3

SILT FENCE 925 LF

ALT. DITCH CHECK @ 180' SPACING (0.9% SLOPE, 18" HEIGHT)

END ALTERNATE DITCH CHECKS STA 721+25

ALTERNATE DITCH CHECK STA 733+86

℄ EXIST. DUNN RD

DUNN RD

I-270 WB

℄ EXIST. I-270

I-270 EB

℄ EXIST. RAMP 4

SILT FENCE 150 LF

PERSHALL RD

US SURVEY 2007

TEMPORARY EROSION CONTROL LEGEND

- (A) ALTERNATE DITCH CHECK
- (C) INLET CHECK
- (R) ROCK DITCH CHECK
- (S) SEDIMENT TRAP
- [/] PLACED IN PREVIOUS PHASE
- SILT FENCE
- TEMPORARY SEEDING & MULCHING

SCALE

0 50 100 150

I-270 EROSION CONTROL
DURING CONSTRUCTION
STA 721+00 TO STA 734+50
SHEET 3 OF 4

STATE OF MISSOURI
EUGENE LOUIS KUEKER JR.
NUMBER PE-2010000912
PROFESSIONAL ENGINEER

THIS SHEET HAS BEEN SIGNED, SEALED, AND DATED ELECTRONICALLY.

IF A SEAL IS PRESENT ON THIS SHEET IT HAS BEEN ELECTRONICALLY SEALED AND DATED.

DATE PREPARED 3/25/2026

ROUTE	STATE
I-270	MO
DISTRICT	SHEET NO.
SL	60

COUNTY: ST. LOUIS

JOB NO.: J6I3020D

CONTRACT ID.:

PROJECT NO.:

BRIDGE NO.:

DATE	DESCRIPTION

MISSOURI HIGHWAYS AND TRANSPORTATION COMMISSION

105 WEST CAPITOL
JEFFERSON CITY, MO 65102
1-888-ASK-MODOT (1-888-275-6636)

HDR Engineering, Inc.
1001 Highlands Plaza Drive
Suite 200
St. Louis, MO 63110-1337
314-425-8300
Certificate of Authority: 000856

MATCHLINE STA 734+50 EXIST. I-270

735

740

745

℄ EXIST. DUNN RD

DUNN RD

I-270 WB

℄ EXIST. I-270

I-270 EB

ALT. DITCH CHECK @ 50' SPACING (3.0% SLOPE, 18" HEIGHT)

END ALTERNATE DITCH CHECKS STA 739+46

PERSHALL RD

BEGIN ALTERNATE DITCH CHECKS STA 738+47

SILT FENCE 271 LF

TEMPORARY EROSION CONTROL LEGEND

- (A) ALTERNATE DITCH CHECK
- (C) INLET CHECK
- (R) ROCK DITCH CHECK
- (S) SEDIMENT TRAP
- [ ] PLACED IN PREVIOUS PHASE
- SILT FENCE
- TEMPORARY SEEDING & MULCHING

SCALE

0 50 100 150

I-270 EROSION CONTROL DURING CONSTRUCTION STA 734+50 TO STA 748+00 SHEET 4 OF 4

STATE OF MISSOURI
EUGENE LOUIS KUELKER JR.
NUMBER PE-2010009912
PROFESSIONAL ENGINEER

THIS SHEET HAS BEEN SIGNED, SEALED, AND DATED ELECTRONICALLY.

IF A SEAL IS PRESENT ON THIS SHEET IT HAS BEEN ELECTRONICALLY SEALED AND DATED.

DATE PREPARED	
3/25/2026	
ROUTE	STATE
I-270	MO
DISTRICT	SHEET NO.
SL	61
COUNTY	
ST. LOUIS	
JOB NO.	
J6I3020D	
CONTRACT ID.	
PROJECT NO.	
BRIDGE NO.	

DATE	DESCRIPTION

MISSOURI HIGHWAYS AND TRANSPORTATION COMMISSION
105 WEST CAPITOL
JEFFERSON CITY, MO 65102
1-888-ASK-MODOT (1-888-275-6636)

HDR Engineering, Inc.
1001 Highlands Plaza Drive
Suite 200
St. Louis, MO 63110-1337
314-425-8300
Certificate of Authority: 000856

TEMPORARY EROSION CONTROL LEGEND

- (A) ALTERNATE DITCH CHECK
- (C) INLET CHECK
- (R) ROCK DITCH CHECK
- (S) SEDIMENT TRAP
- [ ] PLACED IN PREVIOUS PHASE
- SILT FENCE
- TEMPORARY SEEDING & MULCHING

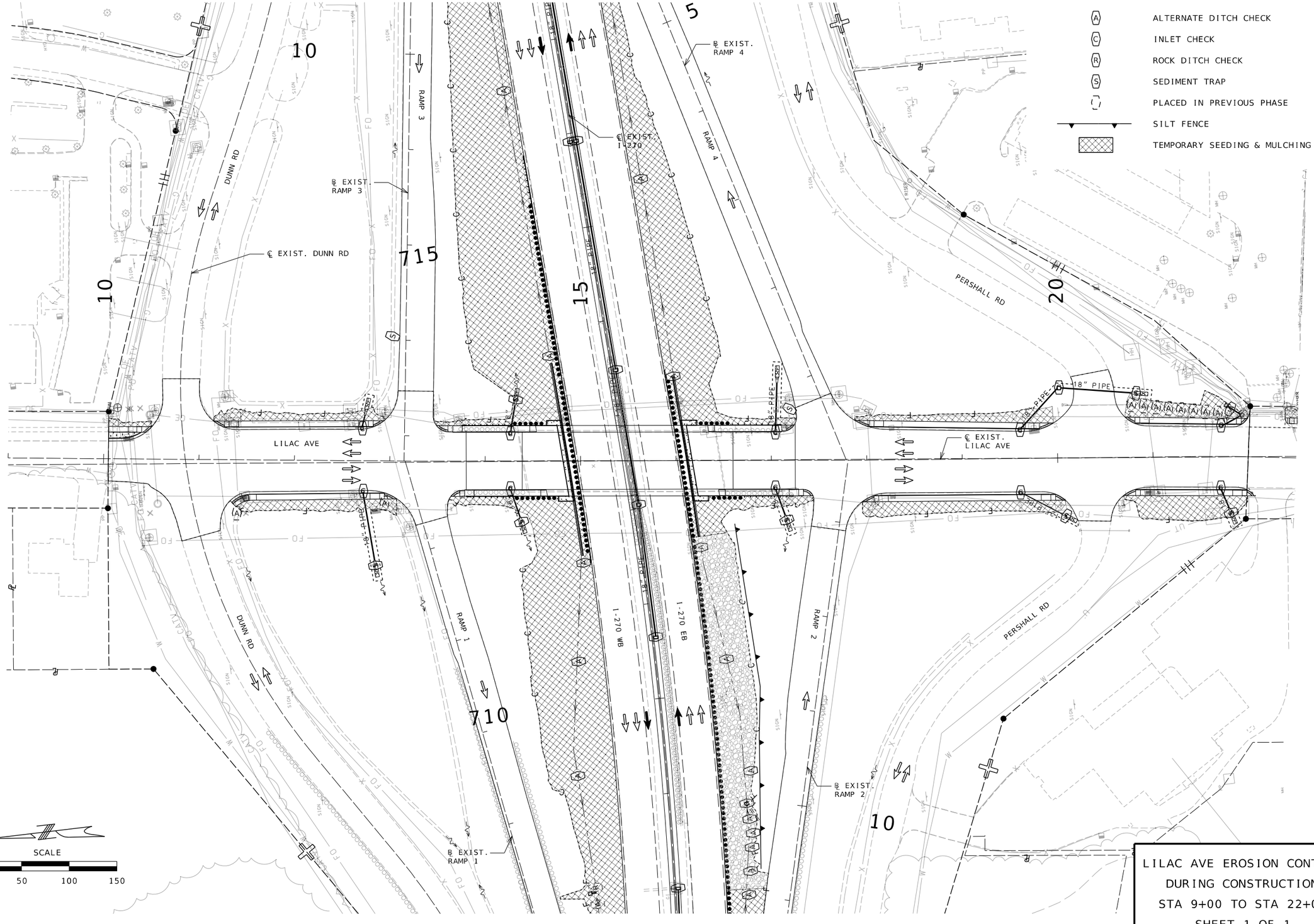

LILAC AVE EROSION CONTROL
DURING CONSTRUCTION
STA 9+00 TO STA 22+00
SHEET 1 OF 1

STATE OF MISSOURI
EUGENE LOUIS KUEKER JR.
NUMBER PE-2010000912
PROFESSIONAL ENGINEER

THIS SHEET HAS BEEN SIGNED, SEALED, AND DATED ELECTRONICALLY.

DATE PREPARED 3/25/2026

ROUTE	STATE
I-270	MO
DISTRICT	SHEET NO.
SL	62

COUNTY: ST. LOUIS
JOB NO.: J6I3020D
CONTRACT ID.:
PROJECT NO.:
BRIDGE NO.:

DESCRIPTION	DATE

IF A SEAL IS PRESENT ON THIS SHEET IT HAS BEEN ELECTRONICALLY SEALED AND DATED.

MISSOURI HIGHWAYS AND TRANSPORTATION COMMISSION
105 WEST CAPITOL
JEFFERSON CITY, MO 65102
1-888-ASK-MODOT (1-888-275-6636)

HDR Engineering, Inc.
1001 Highlands Plaza Drive
Suite 200
St. Louis, MO 63110-1337
314-425-8300
Certificate of Authority: 000856

c:\pwworking\central01\d4169511\062_EC10_J6I3020D_I50_Lilac_Ave.dgn 10:34:28 AM 3/25/2026

EROSION CONTROL LEGEND

SEEDING - COOL SEASON MIXTURE

SCALE

0 50 100 150

MATCHLINE STA 707+50 EXIST. I-270

℄ EXIST. DUNN RD

DUNN RD

I-270 WB

℄ EXIST. I-270

I-270 EB

TYPE 1 ROCK BLANKET

TYPE 2 ROCK DITCH LINER (7.5' WIDTH)

TYPE 3 ROCK DITCH LINER (9' WIDTH)

℄ EXIST. RAMP 1

RAMP 1

℄ EXIST. RAMP 2

RAMP 2

PERSHALL RD

MODOT I-15 BRIDGE ATTACHMENT

18" PIPE

I-270 EROSION CONTROL
POST CONSTRUCTION
STA 694+00 TO STA 707+50
SHEET 1 OF 4

STATE OF MISSOURI
EUGENE LOUIS KUEKER JR.
NUMBER PE-2010000912
PROFESSIONAL ENGINEER

THIS SHEET HAS BEEN SIGNED, SEALED, AND DATED ELECTRONICALLY.

IF A SEAL IS PRESENT ON THIS SHEET IT HAS BEEN ELECTRONICALLY SEALED AND DATED.

DATE PREPARED: 3/25/2026

ROUTE	STATE
I-270	MO

DISTRICT	SHEET NO.
SL	63

COUNTY: ST. LOUIS

JOB NO.: J6I3020D

CONTRACT ID.:

PROJECT NO.:

BRIDGE NO.:

DESCRIPTION	DATE

MISSOURI HIGHWAYS AND TRANSPORTATION COMMISSION

105 WEST CAPITOL
JEFFERSON CITY, MO 65102
1-888-ASK-MODOT (1-888-275-6636)

HDR Engineering, Inc.
1001 Highlands Plaza Drive
Suite 200
St. Louis, MO 63110-1337
314-425-8300
Certificate of Authority: 000856

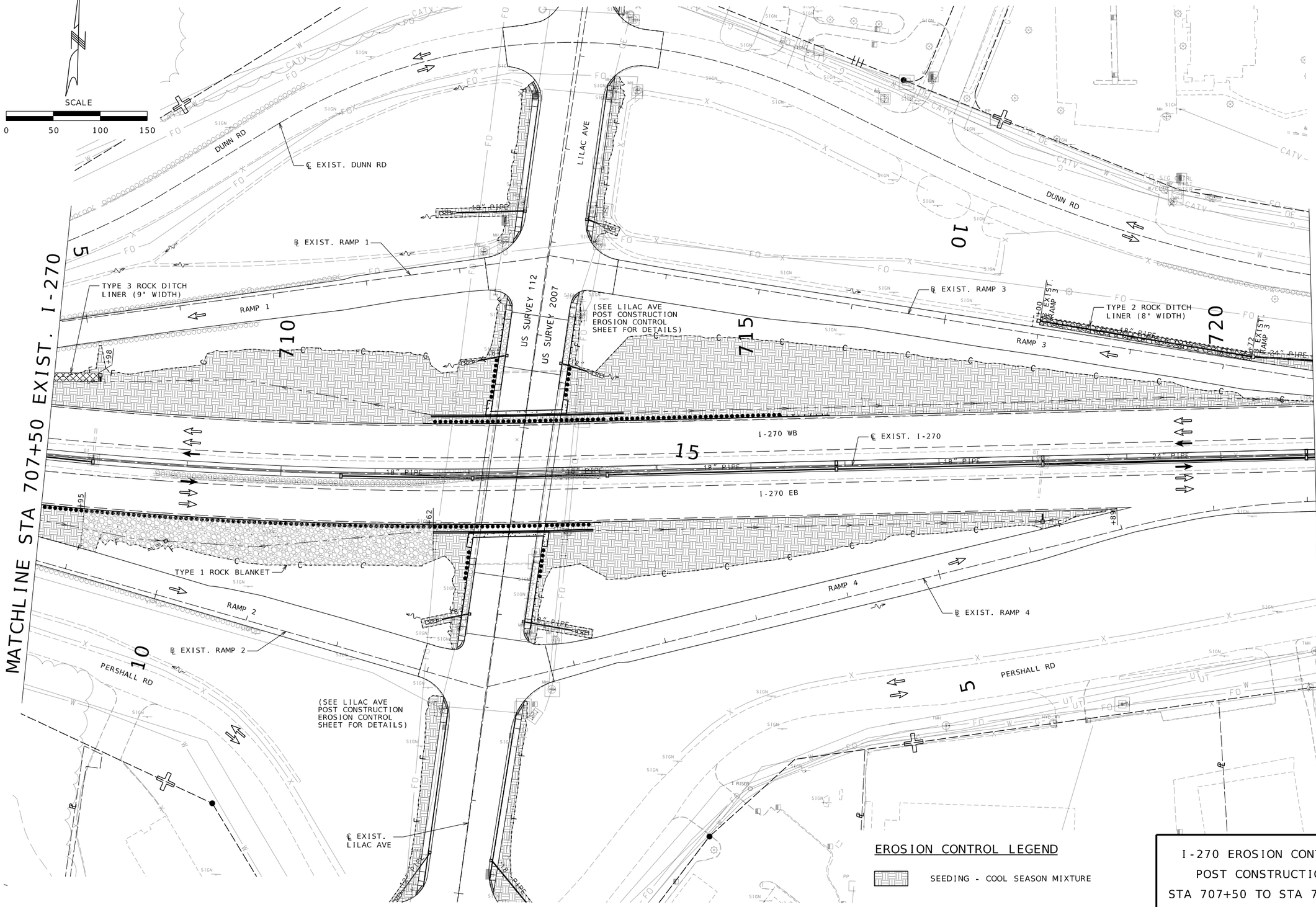

I-270 EROSION CONTROL
POST CONSTRUCTION
STA 707+50 TO STA 721+00
SHEET 2 OF 4

STATE OF MISSOURI
EUGENE LOUIS KUEKER JR.
NUMBER PE-2011008912
PROFESSIONAL ENGINEER

THIS SHEET HAS BEEN SIGNED, SEALED, AND DATED ELECTRONICALLY.

IF A SEAL IS PRESENT ON THIS SHEET IT HAS BEEN ELECTRONICALLY SEALED AND DATED.

DATE PREPARED	3/25/2026
ROUTE	STATE
I-270	MO
DISTRICT	SHEET NO.
SL	64
COUNTY	ST. LOUIS
JOB NO.	J6I3020D
CONTRACT ID.	
PROJECT NO.	
BRIDGE NO.	

DATE	DESCRIPTION

MISSOURI HIGHWAYS AND TRANSPORTATION COMMISSION
105 WEST CAPITOL
JEFFERSON CITY, MO 65102
1-888-ASK-MODOT (1-888-275-6636)

HDR Engineering, Inc.
1001 Highlands Plaza Drive
Suite 200
St. Louis, MO 63110-1337
314-425-8300
Certificate of Authority: 000856

MATCHLINE STA 721+00 EXIST. I-270

MATCHLINE STA 734+50 EXIST. I-270

℄ EXIST. DUNN RD

DUNN RD

℄ EXIST. RAMP 3

℄ EXIST. RAMP 4

I-270 WB

I-270 EB

℄ EXIST. I-270

PERSHALL RD

ROCK LINING FOR CULVERT OUTLET

US SURVEY 2007

EROSION CONTROL LEGEND

SEEDING - COOL SEASON MIXTURE

SCALE

0 50 100 150

I-270 EROSION CONTROL
POST CONSTRUCTION
STA 721+00 TO STA 734+50
SHEET 3 OF 4

STATE OF MISSOURI
EUGENE LOUIS KUEKER JR.
NUMBER PE-2010000912
PROFESSIONAL ENGINEER

THIS SHEET HAS BEEN SIGNED, SEALED, AND DATED ELECTRONICALLY.

IF A SEAL IS PRESENT ON THIS SHEET IT HAS BEEN ELECTRONICALLY SEALED AND DATED.

DATE PREPARED
3/25/2026

ROUTE	STATE
I-270	MO
DISTRICT	SHEET NO.
SL	65

COUNTY
ST. LOUIS

JOB NO.
J6I3020D

CONTRACT ID.

PROJECT NO.

BRIDGE NO.

DESCRIPTION	DATE

MISSOURI HIGHWAYS AND TRANSPORTATION COMMISSION

105 WEST CAPITOL
JEFFERSON CITY, MO 65102
1-888-ASK-MODOT (1-888-275-6636)

HDR Engineering, Inc.
1001 Highlands Plaza Drive
Suite 200
St. Louis, MO 63110-1337
314-425-8300
Certificate of Authority: 000856

c:\pwworking\central01\d4169511\065_EC13_J6I3020D_I50_I-270.dgn 10:34:49 AM 3/25/2026

MATCHLINE STA 734+50 EXIST. I-270

735

740

745

℄ EXIST. DUNN RD

DUNN RD

I-270 WB

℄ EXIST. I-270

I-270 EB

TYPE 1 ROCK BLANKET

ROCK LINING FOR CULVERT OUTLET

PERSHALL RD

ROCK LINING FOR CULVERT OUTLET

EROSION CONTROL LEGEND

SEEDING - COOL SEASON MIXTURE

SCALE

0 50 100 150

I-270 EROSION CONTROL
POST CONSTRUCTION
STA 734+50 TO STA 748+00
SHEET 4 OF 4

STATE OF MISSOURI
EUGENE LOUIS KUELKER JR.
NUMBER PE-2011000912
PROFESSIONAL ENGINEER

THIS SHEET HAS BEEN SIGNED, SEALED, AND DATED ELECTRONICALLY.

IF A SEAL IS PRESENT ON THIS SHEET IT HAS BEEN ELECTRONICALLY SEALED AND DATED.

DATE PREPARED	
3/25/2026	
ROUTE	STATE
I-270	MO
DISTRICT	SHEET NO.
SL	66
COUNTY	
ST. LOUIS	
JOB NO.	
J6I3020D	
CONTRACT ID.	
PROJECT NO.	
BRIDGE NO.	

DATE	DESCRIPTION

MISSOURI HIGHWAYS AND TRANSPORTATION COMMISSION
105 WEST CAPITOL
JEFFERSON CITY, MO 65102
1-888-ASK-MODOT (1-888-275-6636)

HDR Engineering, Inc.
1001 Highlands Plaza Drive
Suite 200
St. Louis, MO 63110-1337
314-425-8300
Certificate of Authority: 000856

c:\pwworking\central01\d4169511\066_EC14_J6I3020D_I50_I-270.dgn 10:34:56 AM 3/25/2026

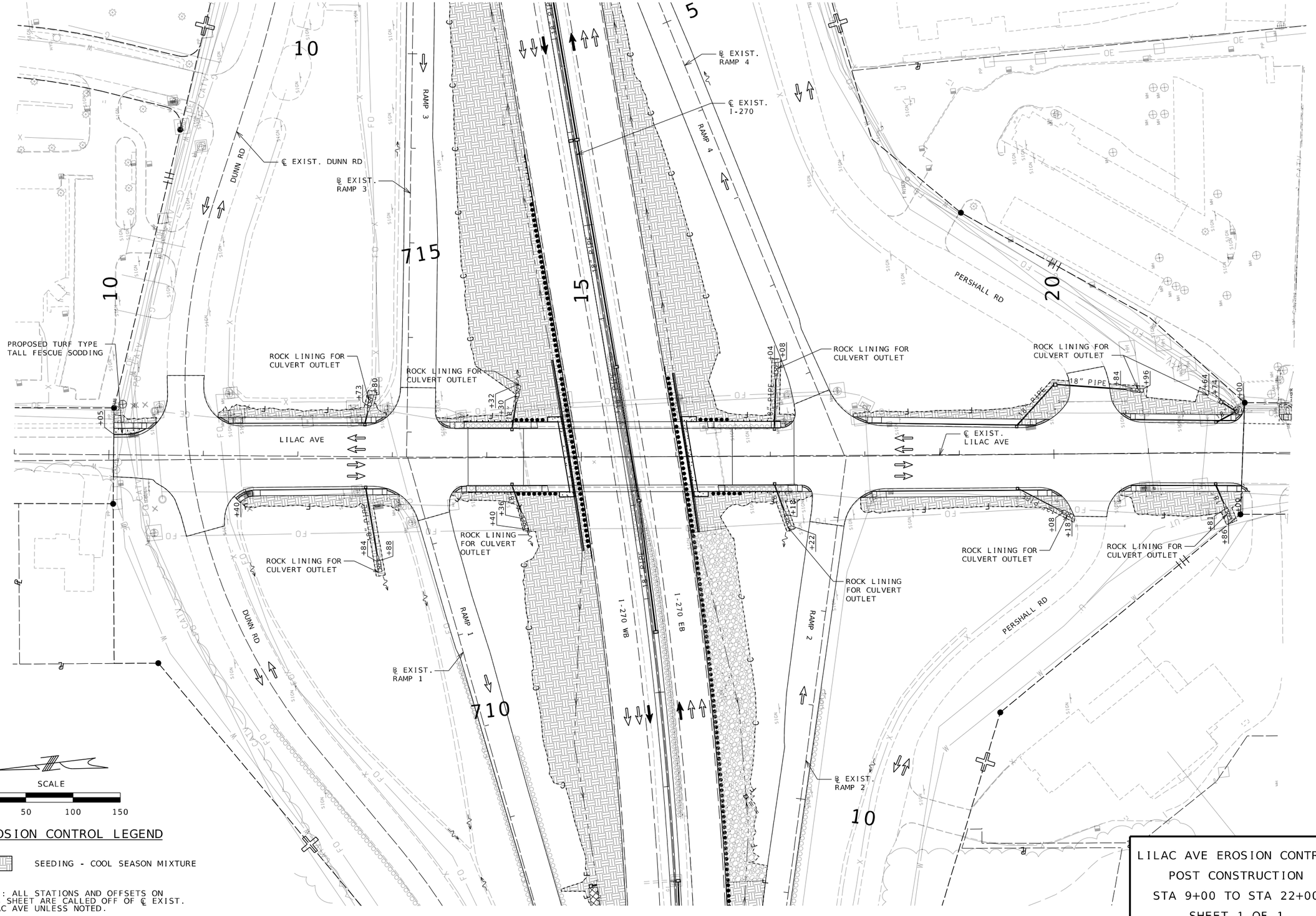

SCALE

0 50 100 150

EROSION CONTROL LEGEND

SEEDING - COOL SEASON MIXTURE

NOTE: ALL STATIONS AND OFFSETS ON THIS SHEET ARE CALLED OFF OF ℄ EXIST. LILAC AVE UNLESS NOTED.

LILAC AVE EROSION CONTROL
POST CONSTRUCTION
STA 9+00 TO STA 22+00
SHEET 1 OF 1

STATE OF MISSOURI
ELGENE LOUIS KUELKER JR.
NUMBER PE-2011000912
PROFESSIONAL ENGINEER

THIS SHEET HAS BEEN SIGNED, SEALED, AND DATED ELECTRONICALLY.

IF A SEAL IS PRESENT ON THIS SHEET IT HAS BEEN ELECTRONICALLY SEALED AND DATED.

DATE PREPARED	3/25/2026
ROUTE	I-270
STATE	MO
DISTRICT	SL
SHEET NO.	67
COUNTY	ST. LOUIS
JOB NO.	J6I3020D
CONTRACT ID.	
PROJECT NO.	
BRIDGE NO.	

DESCRIPTION | DATE

MISSOURI HIGHWAYS AND TRANSPORTATION COMMISSION
105 WEST CAPITOL
JEFFERSON CITY, MO 65102
1-888-ASK-MODOT (1-888-275-6636)

HDR Engineering, Inc.
1001 Highlands Plaza Drive
Suite 200
St. Louis, MO 63110-1337
314-425-8300
Certificate of Authority: 000856

GENERAL NOTES:

1. THE HORIZONTAL STATION REFERENCE POINT (SEE DETAIL A, THIS SHEET) FOR ALL DRAINAGE STRUCTURES IS AS FOLLOWS:

TYPE A INLET	CENTER POINT OF VAULT
TYPE B INLET	CENTER POINT OF VAULT
TYPE C INLET	CENTER POINT OF VAULT
TYPE D INLET	CENTER POINT OF VAULT
TYPE E INLET	CENTER POINT OF VAULT
TYPE G INLET	CENTER POINT OF VAULT
TYPE J INLET	CENTER POINT OF VAULT
TYPE N INLET	CENTER POINT OF GRATE
EXTENSION	CENTERLINE OF PIPE
FLARED END SECTION	CENTERLINE AT PIPE CONNECTION
HEADWALL	CENTERLINE AT OUTSIDE WALL FACE
MANHOLE	CENTER POINT OF VAULT
ABANDON	CENTERLINE
SPECIAL STRUCTURE	CENTER POINT OF VAULT OR AS SPECIFIED
TYPE S INLET	CENTER POINT OF VAULT
TYPE T INLET	CENTER POINT OF VAULT
TYPE V INLET	CENTER OF STRUCTURE
TYPE W INLET	CENTER POINT OF VAULT
TYPE Y INLET	CENTER POINT OF VAULT
REMOVAL	CENTER POINT OF VAULT
PIPE COLLAR	CENTERLINE AT PIPE CONNECTION
SLOTTED DRAIN	CENTERLINE OF PIPE
MSD GRATE INLET	CENTER POINT OF VAULT (MSD STD)

2. EACH DRAINAGE SYSTEM HAS A SYSTEM IDENTIFIER SUCH AS LINE XXX-A, B, C, ETC. XXX IS THE SYSTEM OUTFALL LOCATION IN RELATION TO THE ROUNDED I-270 STATION, AS NOTED ON THE DRAINAGE PROFILE. A, B, C, ETC. ARE EACH OF THE DRAINAGE SYSTEMS THAT OUTFALL AT OR NEAR THE SAME STATION.

3. THE PIPE LENGTH SPECIFIED ON THE DRAINAGE PROFILES IS THE ACTUAL PIPE LENGTH, LP, AS SHOWN IN DETAIL A.

4. MANHOLES SHALL BE PRECAST SLAB BASE PER MODOT STD PLAN 731.00T, UNLESS OTHERWISE NOTED. SIZE IS GIVEN AS THE MANHOLE INNER DIAMETER.

5. ROCK LINING FOR CULVERTS SHALL BE APPLIED AT EACH OUTLET PER MODOT STANDARD PLAN 609.70, UNLESS OTHERWISE NOTED.

6. ALL STORM SEWER CONSTRUCTION WITHIN MODOT RIGHT OF WAY SHALL BE IN ACCORDANCE WITH PROJECT CONSTRUCTION SPECIFICATIONS AND APPLICABLE MODOT STANDARD DRAWINGS.

7. TYPE A & B GUTTERS SHALL FOLLOW PROPOSED OR EXISTING GRADES UNLESS OTHERWISE NOTED.

8. PIPE COLLARS SHALL BE PER MODOT STANDARD PLAN 604.40, UNLESS OTHERWISE NOTED.

9. ROCK DITCH LINERS SHALL BE APPLIED PER MODOT STANDARD PLAN 609.60, UNLESS OTHERWISE NOTED.

10. EXISTING CONCRETE BOX CULVERTS TO BE EXTENDED SHALL BE PER MODOT STANDARD PLAN 703.38, UNLESS OTHERWISE NOTED.

LEGEND

XXXT#	DRAINAGE STRUCTURE ID
XXX	I-270 STATION
T	TYPE OF STRUCTURE: WHERE
	A TYPE A INLET
	B TYPE B INLET
	C TYPE C INLET
	D TYPE D INLET
	S TYPE S INLET
	F FLARED END SECTION
	H HEADWALL
	M MANHOLE
	P PIPE EXTENSION AND FITTINGS
	Q SPECIAL STRUCTURE
	J GUTTER SCUPPER (SEE PLANS FOR DETAIL)
	R TEE CONNECTION
#	NUMERIC IDENTIFIER AS NEEDED TO CREATE A UNIQUE STRUCTURE NAME
_EX	EXISTING STRUCTURE
	PROPOSED ROCK LINING FOR CULVERT OUTLETS
	PROPOSED STORM DRAIN
	PROPOSED DRAINAGE DITCH/SWALE
	EXISTING STORM DRAIN
	EXISTING DRAINAGE DITCH/SWALE

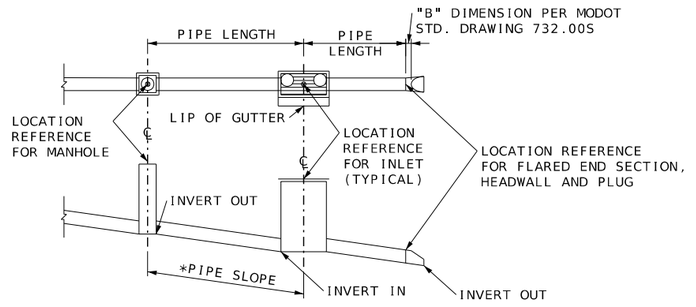

PIPE LAYOUT DETAIL

*SLOPE SHOWN IS CALCULATED FROM CENTER OF STRUCTURE TO CENTER OF STRUCTURE

STATE OF MISSOURI
DAVID RIECHMANN
NUMBER PE-2011000948
PROFESSIONAL ENGINEER

DATE PREPARED: 3/25/2026

ROUTE	STATE
I-270	MO
DISTRICT	SHEET NO.
SL	68

COUNTY: ST. LOUIS
JOB NO.: J6I3020D
CONTRACT ID.:
PROJECT NO.:
BRIDGE NO.:

DATE	DESCRIPTION

IF A SEAL IS PRESENT ON THIS SHEET IT HAS BEEN ELECTRONICALLY SEALED AND DATED.

MISSOURI HIGHWAYS AND TRANSPORTATION COMMISSION
105 WEST CAPITOL
JEFFERSON CITY, MO 65102
1-888-ASK-MODOT (1-888-275-6636)

HORNER SHIFRIN
401 S. 18TH ST., STE. 400 ST. LOUIS, MO 63103
314.430.1000 FAX 314.436.2688
WWW.HORNERSHIFRIN.COM
DISCIPLINE: PROFESSIONAL ENGINEERING
CERTIFICATE OF AUTHORITY: 000159
EXPIRATION DATE: DECEMBER 31, 2026

DRAINAGE GENERAL NOTES SHEET

NOTE:

GUTTER TO TRANSITION FROM A TRAPEZOIDAL SECTION TO TWO SEMI-CIRCULAR SECTIONS THE SAME DIAMETER AS THE WYE.

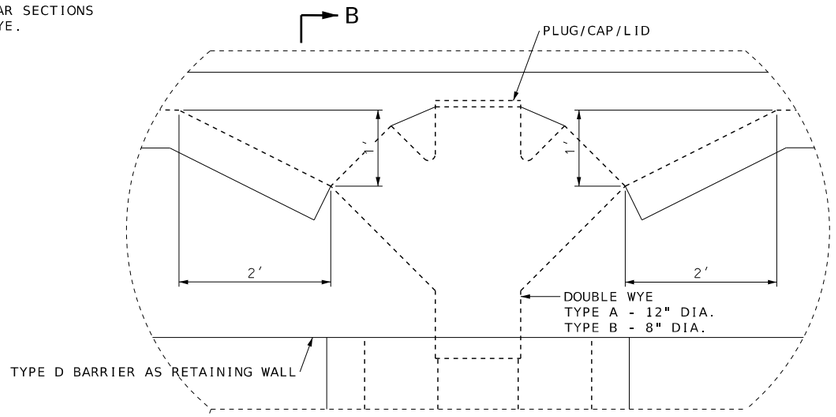

SECTION A-A
AT LOW POINT

NOTE:
MAINTAIN MINIMUM THREE FOOT COVER ON SCUPPER PIPES.

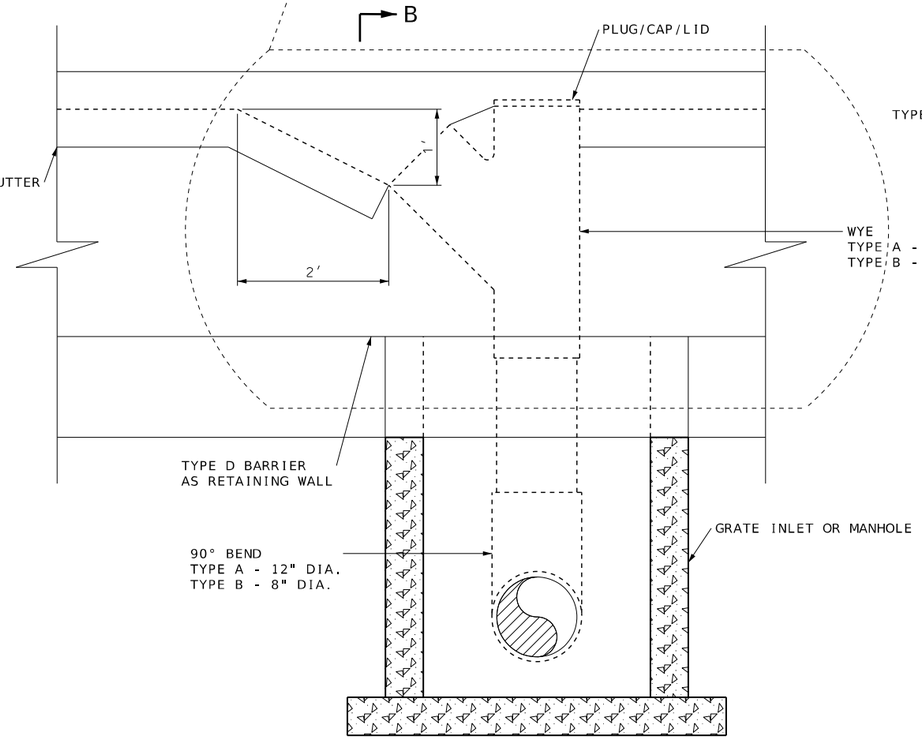

SECTION B-B
ON-GRADE

NOTE:

TYPE A & B SCUPPERS SHALL BE SCHEDULE 40 PVC

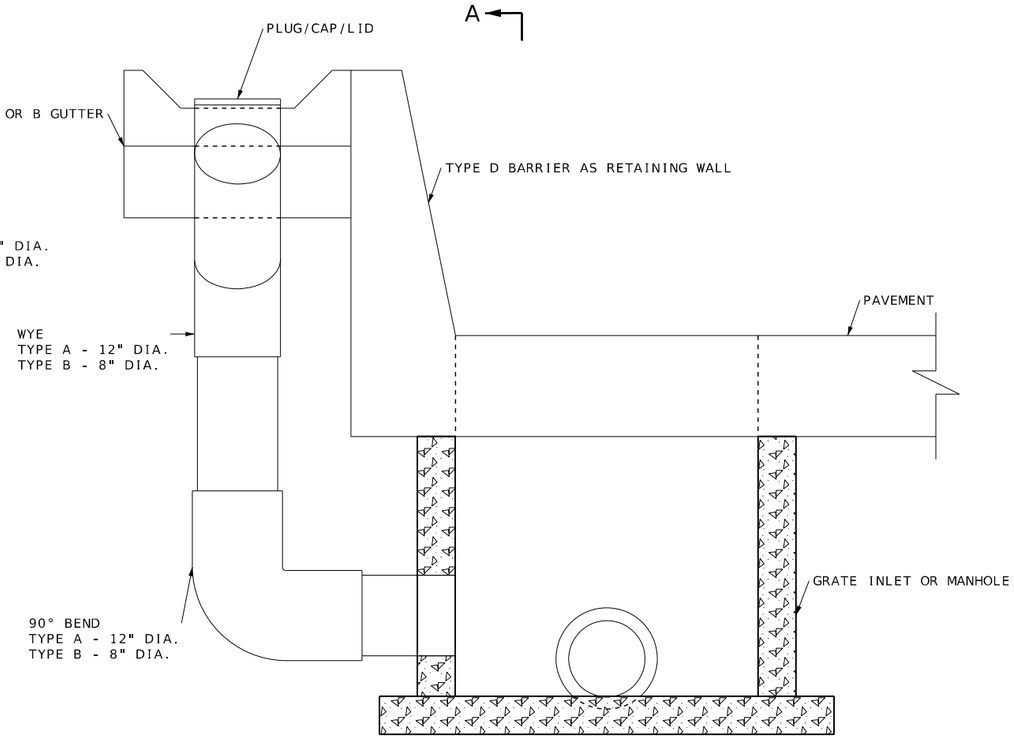

SECTION A-A

DETAILS OF GUTTER SCUPPER TYPES A & B

NOTE: THIS DRAWING IS NOT TO SCALE. FOLLOW DIMENSIONS.

GUTTER SCUPPER
DETAIL SHEET

STATE OF MISSOURI
DAVID RIECHMANN
NUMBER PE-2011000948
PROFESSIONAL ENGINEER

DATE PREPARED
3/25/2026

ROUTE	STATE
I-270	MO
DISTRICT	SHEET NO.
SL	69

COUNTY
ST. LOUIS

JOB NO.
J6I3020D

CONTRACT ID.

PROJECT NO.

BRIDGE NO.

DESCRIPTION	DATE

IF A SEAL IS PRESENT ON THIS SHEET IT HAS BEEN ELECTRONICALLY SEALED AND DATED.

MISSOURI HIGHWAYS AND TRANSPORTATION COMMISSION
105 WEST CAPITOL
JEFFERSON CITY, MO 65102
1-888-ASK-MODOT (1-888-275-6636)

HORNER SHIFRIN
401 S. 18TH ST., STE. 400 ST. LOUIS, MO 63103
314-241-1976 FAX 314-241-1988
WWW.HORNERSHIFRIN.COM
DISCIPLINE: PROFESSIONAL ENGINEERING
CERTIFICATE OF AUTHORITY: 000159
EXPIRATION DATE: DECEMBER 31, 2026

STANDARD SHOP DRAWINGS TO BE PROVIDED TO MSD FOR THEIR RECORD.
MSD CONTACT: BRIAN DUNN (314) 335-2072

OUTFALL STRUCTURE DETAIL

24" OUTFLOW PIPE	445.00
12" LOW FLOW INVERT AT OUTFALL STRUCTURE	446.00
GRATE INLET SILL	449.00

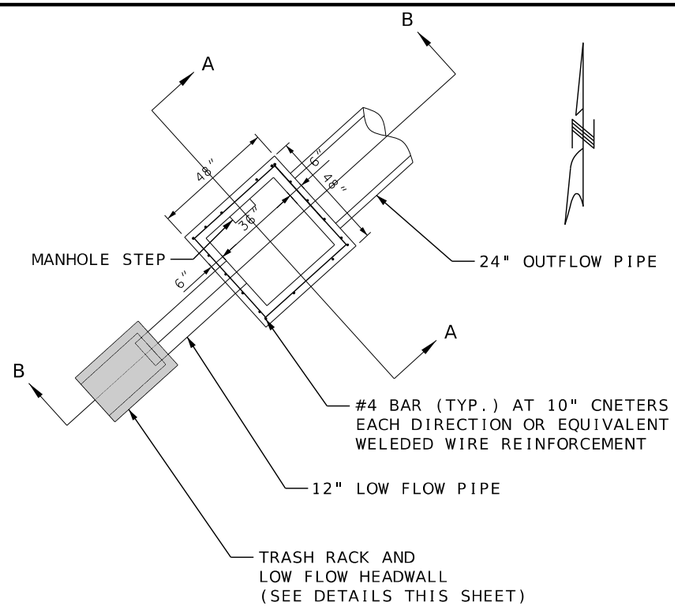

OUTFALL STRUCTURE DETAIL (STRUCTURE 738Q1)
PLAN VIEW
N.T.S.

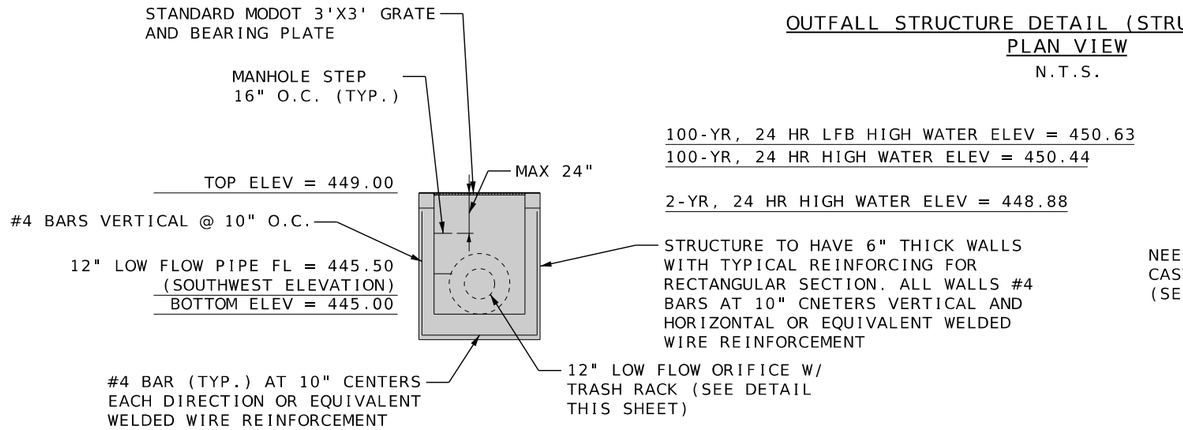

SECTION A-A
N.T.S.

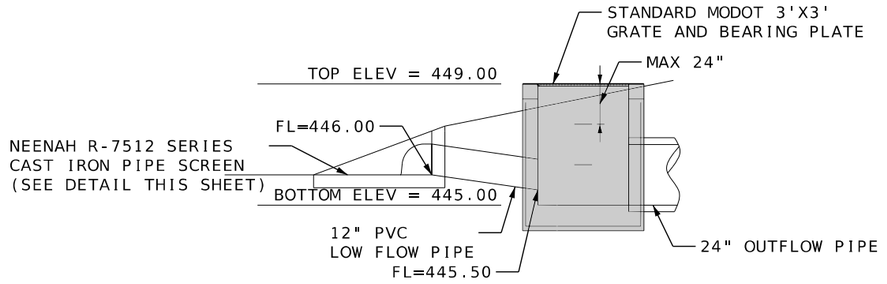

SECTION B-B
N.T.S.

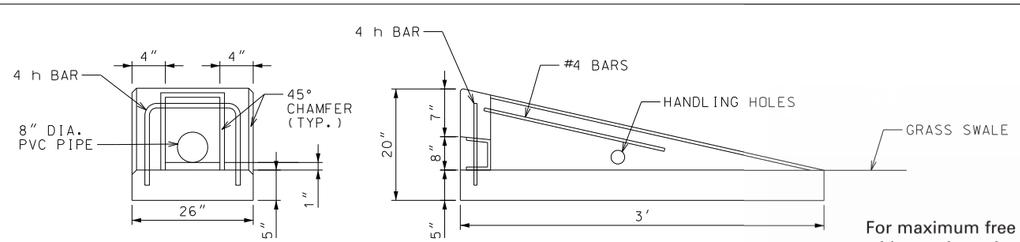

For maximum free drainage area with openings sized to prevent clogging.
Six 3/4" holes for anchor bolts.

Dimensions in inches

Catalog No.	Height	Length	Openings	Width	for Pipe Size
R-7512-B1	13	18	1	18	12 inch

OS A-1.0 TRASH RACK HEADWALL DETAIL
N.T.S.

WATKINS CREEK WATERSHED
DETENTION BASIN
OUTFALL STRUCTURE (738Q1)
DETAILS

STATE OF MISSOURI
DAVID RIECHMANN
NUMBER PE-2011000948
PROFESSIONAL ENGINEER

DATE PREPARED	3/25/2026
ROUTE	I-270
STATE	MO
DISTRICT	SL
SHEET NO.	70
COUNTY	ST. LOUIS
JOB NO.	J6I3020D
CONTRACT ID.	
PROJECT NO.	
BRIDGE NO.	

DESCRIPTION
DATE

IF A SEAL IS PRESENT ON THIS SHEET IT HAS BEEN ELECTRONICALLY SEALED AND DATED.

MISSOURI HIGHWAYS AND TRANSPORTATION COMMISSION
MoDOT
105 WEST CAPITOL
JEFFERSON CITY, MO 65102
1-888-ASK-MODOT (1-888-275-6636)

HORNER SHIFRIN
401 S. 18TH ST., STE. 400 ST. LOUIS, MO 63103
314-531-4321 - FAX 314-531-6966
WWW.HORNERSHIFRIN.COM
DISCIPLINE: PROFESSIONAL ENGINEERING
CERTIFICATE OF AUTHORITY: 000159
EXPIRATION DATE: DECEMBER 31, 2026

c:\pwworking\central01\d4601931\01_DRDT_J613020D-I50_BasinOutfall.dgn 10:10:50 AM 3/25/2026

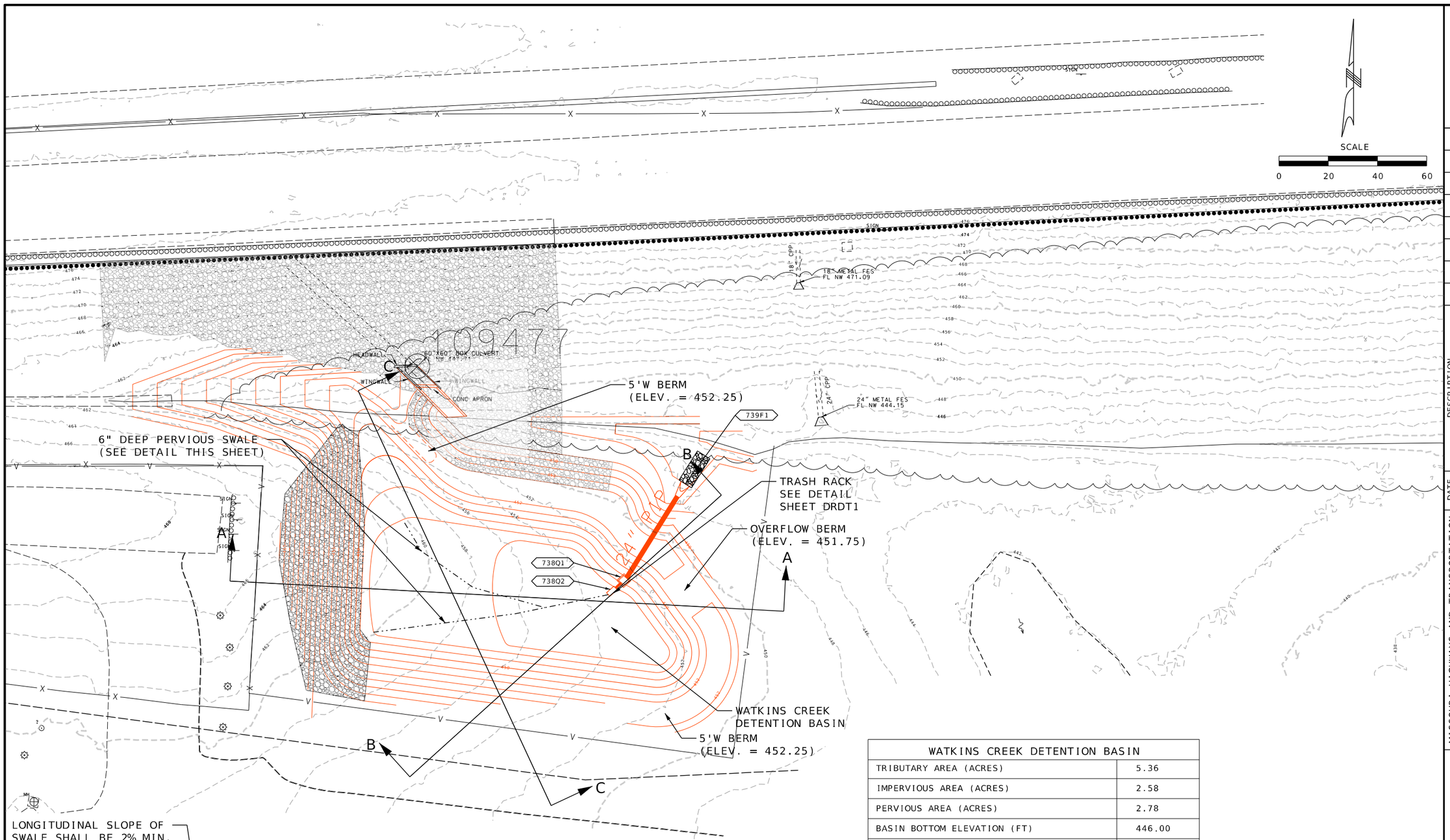

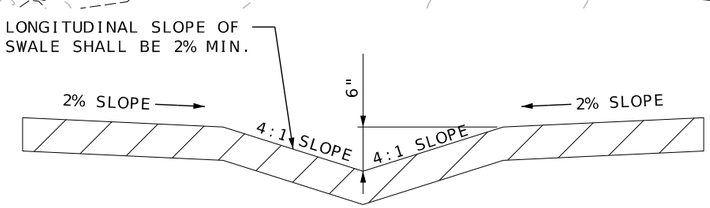

DETENTION BASIN PERVIOUS SWALE DETAIL

N.T.S.

WATKINS CREEK DETENTION BASIN	
TRIBUTARY AREA (ACRES)	5.36
IMPERVIOUS AREA (ACRES)	2.58
PERVIOUS AREA (ACRES)	2.78
BASIN BOTTOM ELEVATION (FT)	446.00
2-YEAR ORIFICE ELEVATION (FT)	446.00
2-YEAR HIGH WATER ELEVATION (FT)	448.88
100-YEAR GRATE ELEVATION (FT)	449.00
100-YEAR HIGH WATER ELEVATION (FT)	450.44
100-YEAR LOW FLOW BLOCKED ELEVATION (FT)	450.63
BERM ELEVATION (FT)	451.75
DETENTION BASIN TRIBUTARY AREA CN	89
DETENTION BASIN TRIBUTARY AREA Tc	5 MINUTES

WATKINS CREEK WATERSHED
DETENTION BASIN PLAN

STATE OF MISSOURI
DAVID RIECHMANN
NUMBER
PE-2011000948
PROFESSIONAL ENGINEER

DATE PREPARED
3/25/2026

ROUTE	STATE
I-270	MO
DISTRICT	SHEET NO.
SL	71

COUNTY
ST. LOUIS

JOB NO.
J6I3020D

CONTRACT ID.

PROJECT NO.

BRIDGE NO.

DATE	DESCRIPTION

MISSOURI HIGHWAYS AND TRANSPORTATION COMMISSION

MoDOT

105 WEST CAPITOL
JEFFERSON CITY, MO 65102
1-888-ASK-MODOT (1-888-275-6636)

HORNER SHIFRIN

401 S. 18TH ST., STE. 400 ST. LOUIS, MO 63103
314-531-4321 - FAX 314-531-6966
WWW.HORNERSHIFRIN.COM
DISCIPLINE: PROFESSIONAL ENGINEERING
CERTIFICATE OF AUTHORITY: 000159
EXPIRATION DATE: DECEMBER 31, 2026

IF A SEAL IS PRESENT ON THIS SHEET IT HAS BEEN ELECTRONICALLY SEALED AND DATED.

c:\pwworking\central01\d4601931\XX_DET1_J613020D_PLAN.dgn 10:11:17 AM 3/25/2026

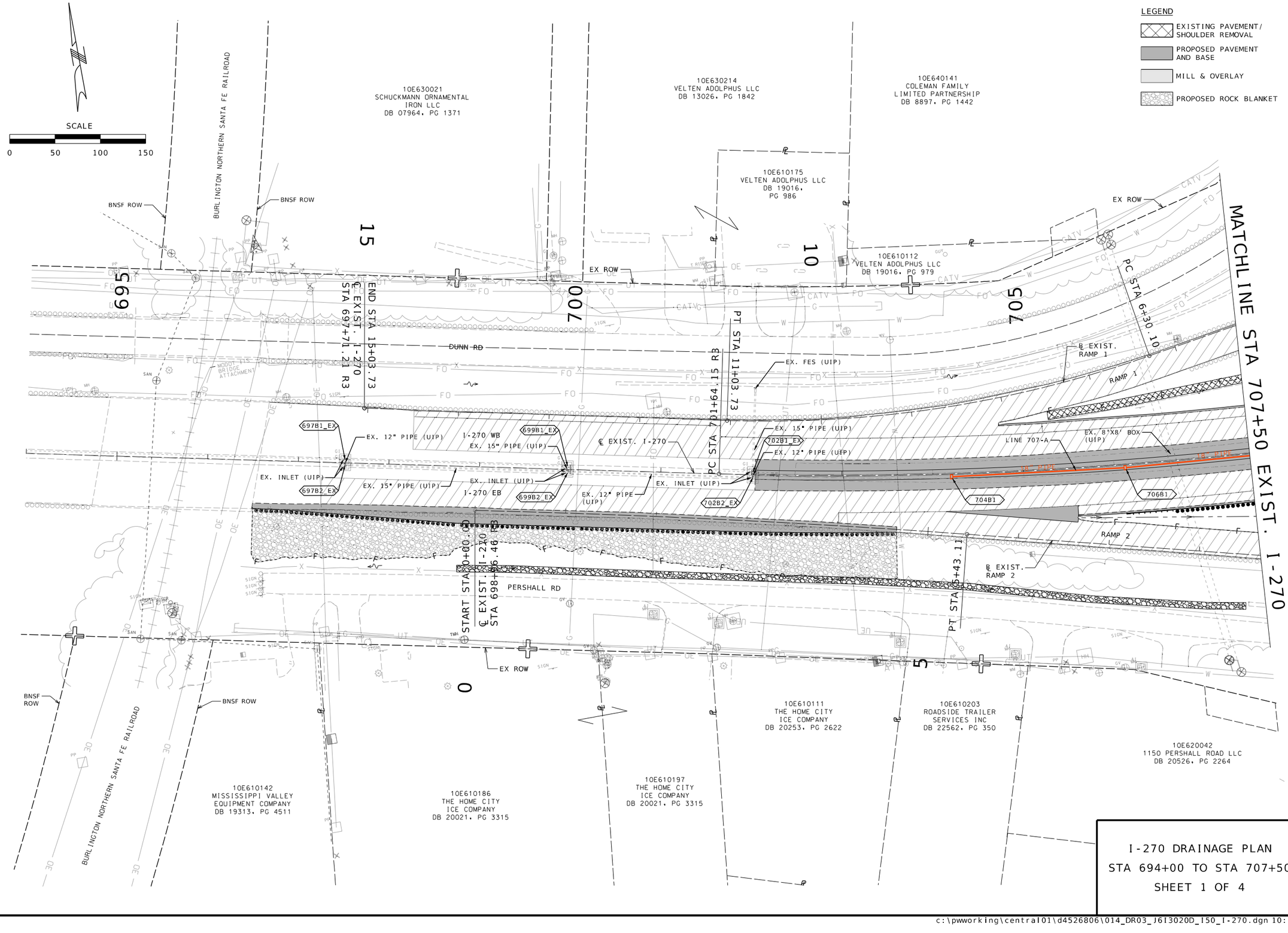

I-270 DRAINAGE PLAN
STA 694+00 TO STA 707+50
SHEET 1 OF 4

STATE OF MISSOURI
DAVID RIECHMANN
NUMBER PE-2011000948
PROFESSIONAL ENGINEER

DATE PREPARED
3/25/2026

ROUTE	STATE
I-270	MO
DISTRICT	SHEET NO.
SL	72

COUNTY
ST. LOUIS

JOB NO.
J6I3020D

CONTRACT ID.

PROJECT NO.

BRIDGE NO.

DATE	DESCRIPTION

IF A SEAL IS PRESENT ON THIS SHEET IT HAS BEEN ELECTRONICALLY SEALED AND DATED.

MISSOURI HIGHWAYS AND TRANSPORTATION COMMISSION
105 WEST CAPITOL
JEFFERSON CITY, MO 65102
1-888-ASK-MODOT (1-888-275-6636)

HORNER SHIFRIN
401 S. 18TH ST., STE. 400 ST. LOUIS, MO 63103
314-241-1976 FAX 314-241-1988
SHOFIRM@HORNERSHIFRIN.COM
DISCIPLINE: PROFESSIONAL ENGINEERING
CERTIFICATE OF AUTHORITY: 000159
EXPIRATION DATE: DECEMBER 31, 2026

c:\pwworking\central01\d4526806\014_DR03_J6I3020D_I50_I-270.dgn 10:11:25 AM 3/25/2026

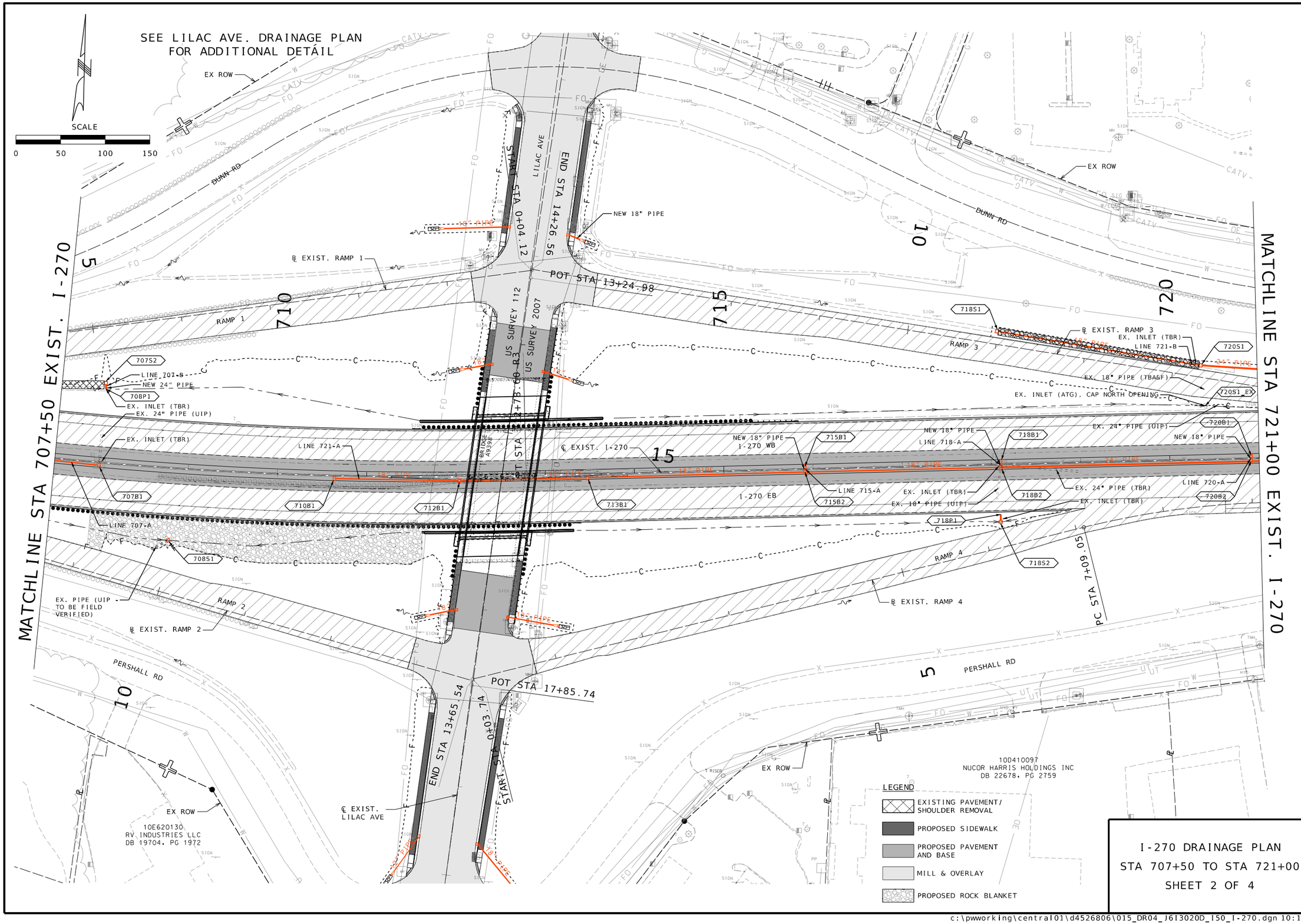

I-270 DRAINAGE PLAN
STA 707+50 TO STA 721+00
SHEET 2 OF 4

STATE OF MISSOURI
DAVID RIECHMANN
NUMBER
PE-2011000948
PROFESSIONAL ENGINEER

DATE PREPARED	3/25/2026
ROUTE	I-270
STATE	MO
DISTRICT	SL
SHEET NO.	73
COUNTY	ST. LOUIS
JOB NO.	J6I3020D
CONTRACT ID.	
PROJECT NO.	
BRIDGE NO.	

DATE	DESCRIPTION

IF A SEAL IS PRESENT ON THIS SHEET IT HAS BEEN ELECTRONICALLY SEALED AND DATED.

MISSOURI HIGHWAYS AND TRANSPORTATION COMMISSION
MoDOT
105 WEST CAPITOL
JEFFERSON CITY, MO 65102
1-888-ASK-MODOT (1-888-275-6636)

HORNER SHIFRIN
401 S. 18TH ST., STE. 400 ST. LOUIS, MO 63103
314-531-4321 • FAX 314-531-6966
WWW.HORNERSHIFRIN.COM
DISCIPLINE: PROFESSIONAL ENGINEERING
CERTIFICATE OF AUTHORITY: 000159
EXPIRATION DATE: DECEMBER 31, 2026

c:\pwworking\central01\d4526806\015_DR04_J6I3020D_I50_I-270.dgn 10:11:35 AM 3/25/2026

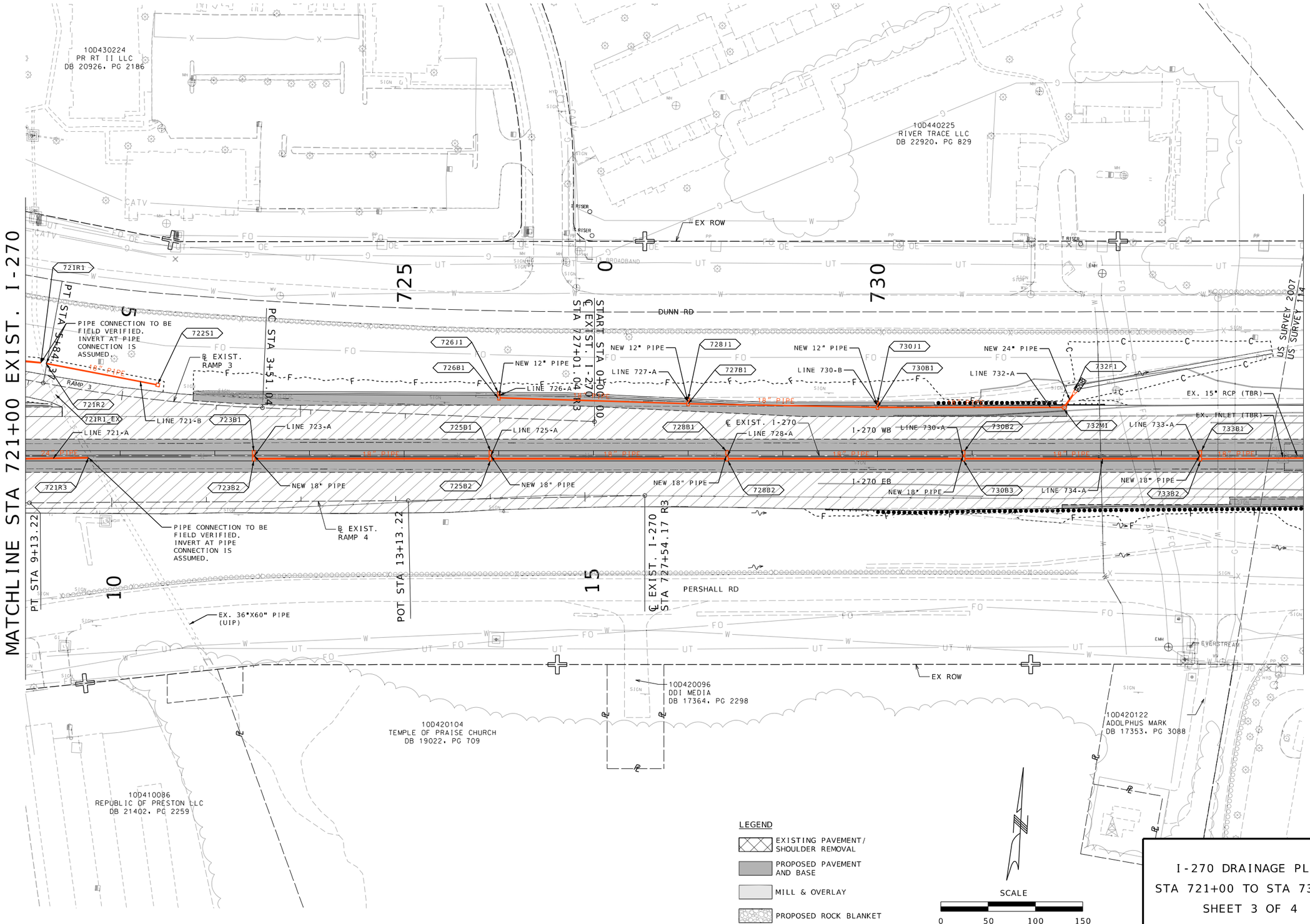

I-270 DRAINAGE PLAN
STA 721+00 TO STA 734+50
SHEET 3 OF 4

STATE OF MISSOURI
DAVID RIECHMANN
NUMBER
PE-2011000948
PROFESSIONAL ENGINEER

DATE PREPARED	3/25/2026
ROUTE	I-270
STATE	MO
DISTRICT	SL
SHEET NO.	74
COUNTY	ST. LOUIS
JOB NO.	J6I3020D
CONTRACT ID.	
PROJECT NO.	
BRIDGE NO.	

DATE	DESCRIPTION

IF A SEAL IS PRESENT ON THIS SHEET IT HAS BEEN ELECTRONICALLY SEALED AND DATED.

MISSOURI HIGHWAYS AND TRANSPORTATION COMMISSION
MoDOT
105 WEST CAPITOL
JEFFERSON CITY, MO 65102
1-888-ASK-MODOT (1-888-275-6636)

HORNER SHIFRIN
401 S. 18TH ST., STE. 400 ST. LOUIS, MO 63103
314-531-4321 • FAX 314-531-6966
WWW.HORNERSHIFRIN.COM
DISCIPLINE: PROFESSIONAL ENGINEERING
CERTIFICATE OF AUTHORITY: 000159
EXPIRATION DATE: DECEMBER 31, 2026

c:\pwworking\central01\d4526806\016_DR05_J6I3020D_I50_I-270.dgn 10:11:44 AM 3/25/2026

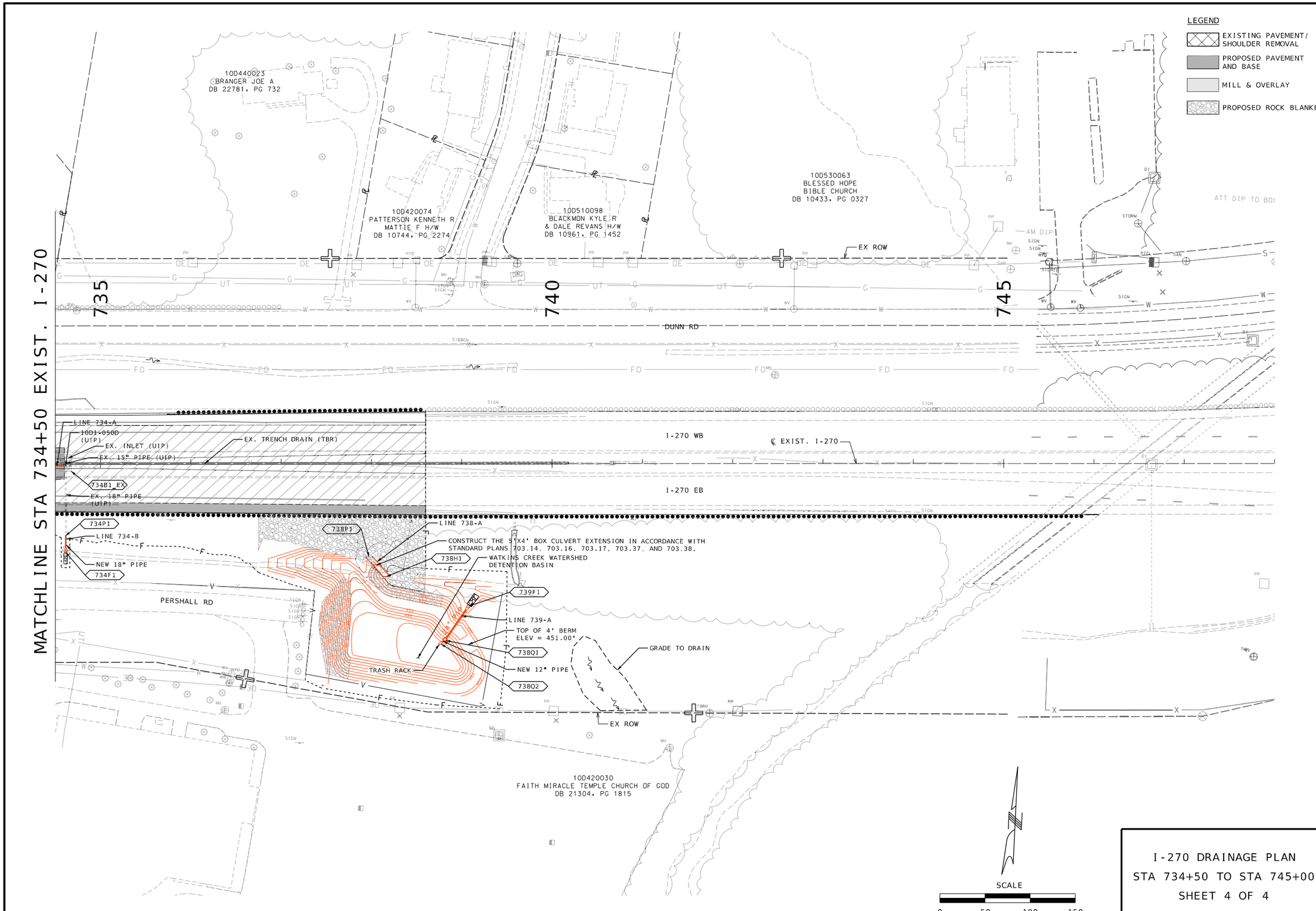

I-270 DRAINAGE PLAN
STA 734+50 TO STA 745+00
SHEET 4 OF 4

STATE OF MISSOURI
DAVID RIECHMANN
NUMBER
PE-2011000948
PROFESSIONAL ENGINEER

DATE PREPARED	3/25/2026
ROUTE	I-270
STATE	MO
DISTRICT	SL
SHEET NO.	75
COUNTY	ST. LOUIS
JOB NO.	J6I3020D
CONTRACT ID.	
PROJECT NO.	
BRIDGE NO.	

DATE	DESCRIPTION

MISSOURI HIGHWAYS AND TRANSPORTATION COMMISSION

MoDOT

105 WEST CAPITOL
JEFFERSON CITY, MO 65102
1-888-ASK-MODOT (1-888-275-6636)

HORNER SHIFRIN

401 S. 18TH ST., STE. 400 ST. LOUIS, MO 63103
314-531-4321 - FAX 314-531-6966
WWW.HORNERSHIFRIN.COM
DISCIPLINE: PROFESSIONAL ENGINEERING
CERTIFICATE OF AUTHORITY: 000159
EXPIRATION DATE: DECEMBER 31, 2026

IF A SEAL IS PRESENT ON THIS SHEET IT HAS BEEN ELECTRONICALLY SEALED AND DATED.

c:\pwworking\central01\d4526806\017_DR06_J6I3020D_I50_I-270.dgn 10:11:51 AM 3/25/2026

SCALE

0 50 100 150

LEGEND

- EXISTING PAVEMENT/ SHOULDER REMOVAL
- PROPOSED SIDEWALK
- PROPOSED PAVEMENT AND BASE
- MILL & OVERLAY

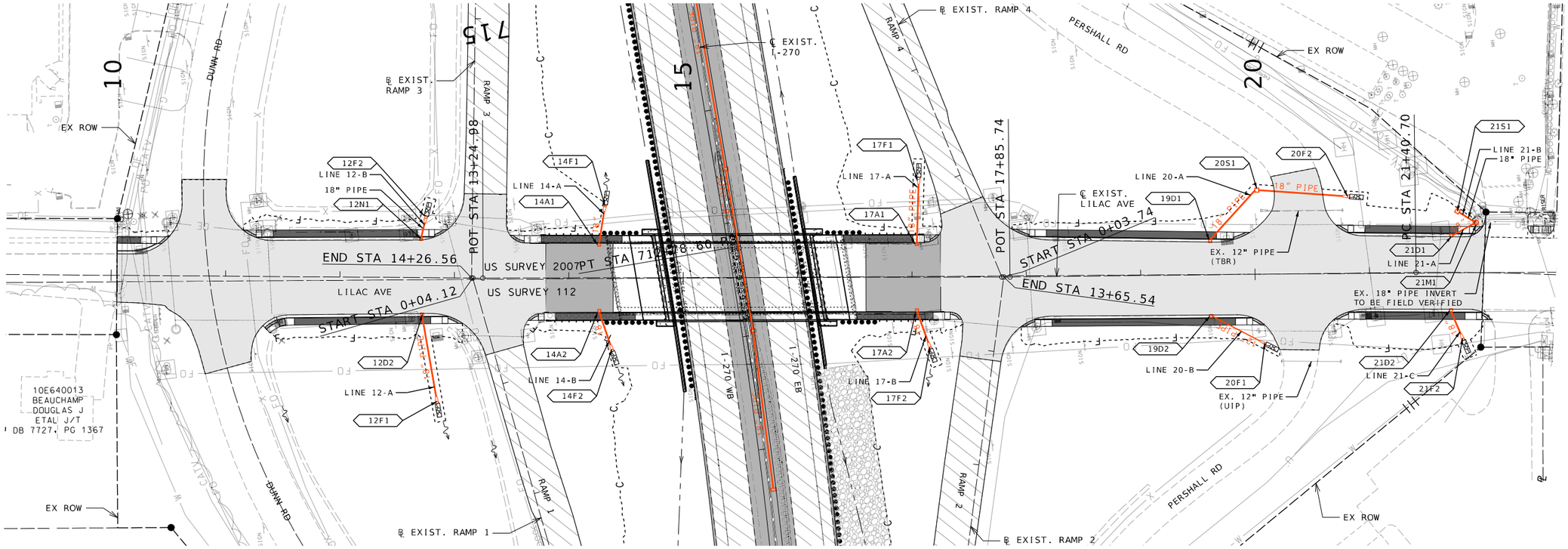

LILAC AVE

DRAINAGE PLAN

STA 9+00 TO STA 22+00

SHEET 1 OF 1

STATE OF MISSOURI
DAVID RIECHMANN
NUMBER
PE-2011000948
PROFESSIONAL ENGINEER

DATE PREPARED	3/25/2026
ROUTE	I-270
STATE	MO
DISTRICT	SL
SHEET NO.	76
COUNTY	ST. LOUIS
JOB NO.	J6I3020D
CONTRACT ID.	
PROJECT NO.	
BRIDGE NO.	

DATE	DESCRIPTION

IF A SEAL IS PRESENT ON THIS SHEET IT HAS BEEN ELECTRONICALLY SEALED AND DATED.

MISSOURI HIGHWAYS AND TRANSPORTATION COMMISSION

MoDOT

105 WEST CAPITOL
JEFFERSON CITY, MO 65102
1-888-ASK-MODOT (1-888-275-6636)

HORNER SHIFRIN

401 S. 18TH ST., STE. 400 ST. LOUIS, MO 63103
314-531-4321 - FAX 314-531-6966
WWW.HORNERSHIFRIN.COM
DISCIPLINE: PROFESSIONAL ENGINEERING
CERTIFICATE OF AUTHORITY: 000159
EXPIRATION DATE: DECEMBER 31, 2026

c:\pwworking\central01\d4526806\018_DR07_J6I3020D_I50_Lilac_Ave.dgn 10:11:58 AM 3/25/2026

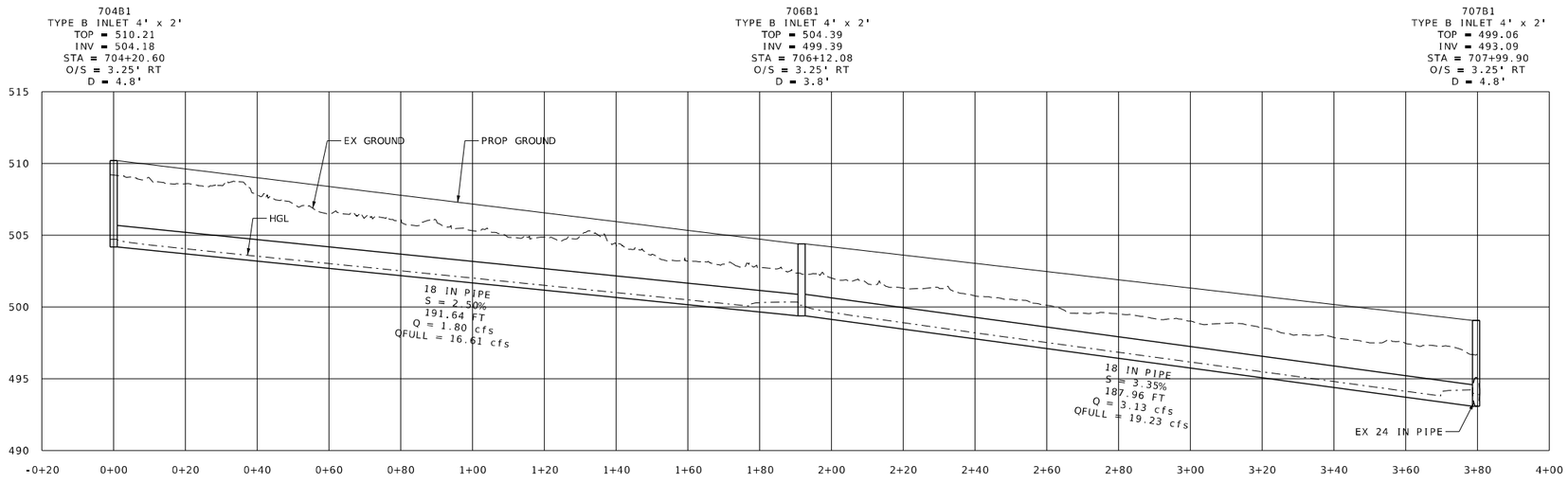

LINE 707-A

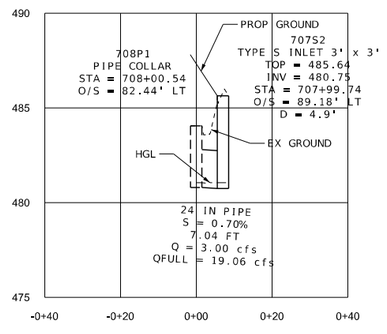

LINE 707-B

NOTES:

1) ALL PIPES TO BE GROUP A UNLESS OTHERWISE NOTED.
2) REFER TO PIPE LAYOUT DETAIL ON DRAINAGE GENERAL NOTES SHEET.
3) ALL SEWERS SHOWN SHALL BE MAINTAINED BY MODOT UNLESS OTHERWISE NOTED.
4) INLET STRUCTURE BASE TO BE SIZED APPROPRIATELY FOR INCOMING AND OUTGOING PIPES. SHOP DRAWINGS TO BE PROVIDED PRIOR TO CONSTRUCTION.

I-270 DRAINAGE PROFILES

SHEET 1 OF 5

STATE OF MISSOURI
DAVID RIECHMANN
NUMBER PE-2011000848
PROFESSIONAL ENGINEER

DATE PREPARED
3/25/2026

ROUTE	STATE
I-270	MO

DISTRICT	SHEET NO.
SL	77

COUNTY
ST. LOUIS

JOB NO.
J6I3020D

CONTRACT ID.

PROJECT NO.

BRIDGE NO.

DESCRIPTION	DATE

IF A SEAL IS PRESENT ON THIS SHEET IT HAS BEEN ELECTRONICALLY SEALED AND DATED.

MISSOURI HIGHWAYS AND TRANSPORTATION COMMISSION

105 WEST CAPITOL
JEFFERSON CITY, MO 65102
1-888-ASK-MODOT (1-888-275-6636)

HORNER SHIFRIN

401 S. 18TH ST., STE. 400 ST. LOUIS, MO 63103
314-621-6115 FAX 314-621-5466
WWW.HORNERSHIFRIN.COM
DISCIPLINE: PROFESSIONAL ENGINEERING
CERTIFICATE OF AUTHORITY: 000159
EXPIRATION DATE: DECEMBER 31, 2026

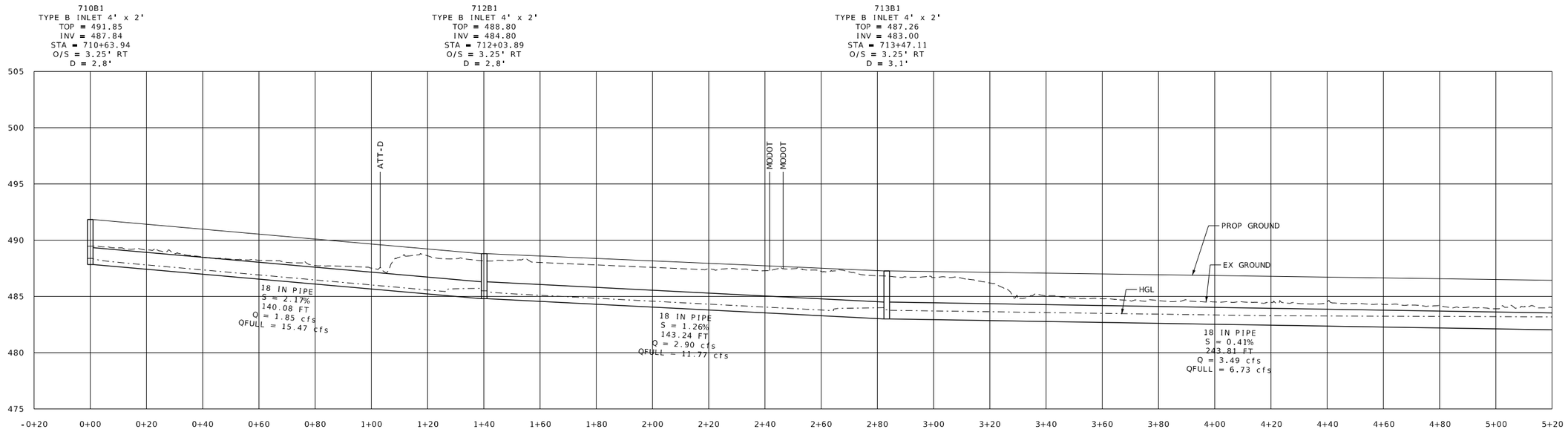

LINE 721-A

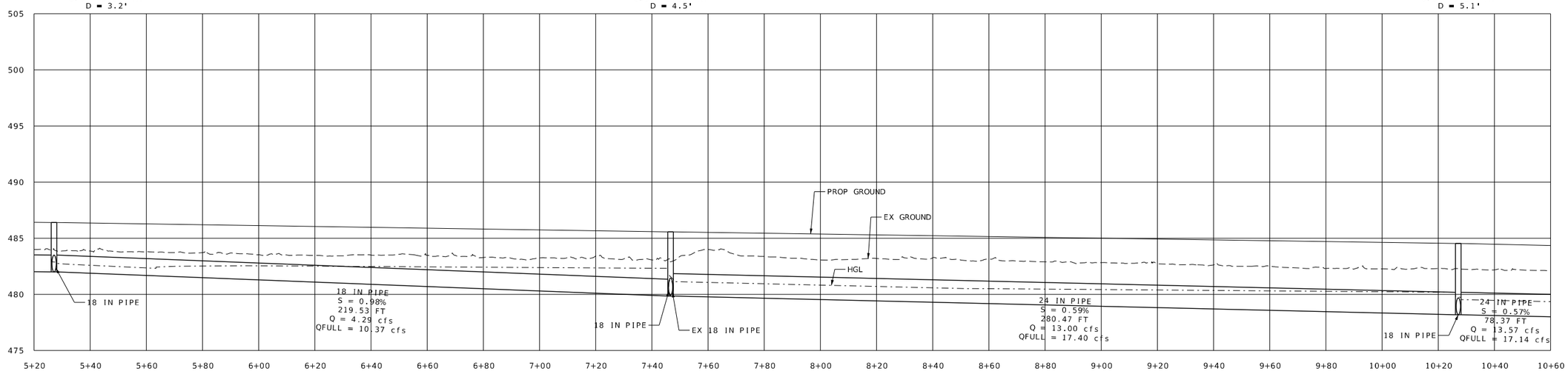

LINE 721-A (CONT)

NOTES:

1) ALL PIPES TO BE GROUP A UNLESS OTHERWISE NOTED.
2) REFER TO PIPE LAYOUT DETAIL ON DRAINAGE GENERAL NOTES SHEET.
3) ALL SEWERS SHOWN SHALL BE MAINTAINED BY MODOT UNLESS OTHERWISE NOTED.
4) INLET STRUCTURE BASE TO BE SIZED APPROPRIATELY FOR INCOMING AND OUTGOING PIPES. SHOP DRAWINGS TO BE PROVIDED PRIOR TO CONSTRUCTION.

I-270 DRAINAGE PROFILES
SHEET 2 OF 5

STATE OF MISSOURI
DAVID RIECHMANN
NUMBER PE-2011000948
PROFESSIONAL ENGINEER

IF A SEAL IS PRESENT ON THIS SHEET IT HAS BEEN ELECTRONICALLY SEALED AND DATED.

DATE PREPARED: 3/25/2026
ROUTE: I-270 | STATE: MO
DISTRICT: SL | SHEET NO.: 78
COUNTY: ST. LOUIS
JOB NO.: J6I3020D
CONTRACT ID.:
PROJECT NO.:
BRIDGE NO.:

DESCRIPTION	DATE

MISSOURI HIGHWAYS AND TRANSPORTATION COMMISSION
105 WEST CAPITOL
JEFFERSON CITY, MO 65102
1-888-ASK-MODOT (1-888-275-6636)

HORNER SHIFRIN
401 S. 18TH ST., STE. 400 ST. LOUIS, MO 63103
314-241-1976 FAX 314-241-1666
SHIFRIN.COM
DISCIPLINE: PROFESSIONAL ENGINEERING
CERTIFICATE OF AUTHORITY: 000159
EXPIRATION DATE: DECEMBER 31, 2026

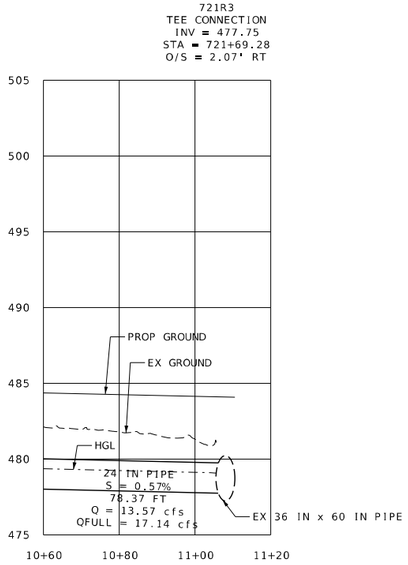

LINE 721-A (CONT)

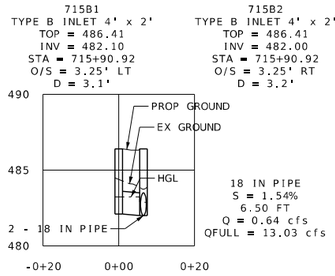

LINE 715-A

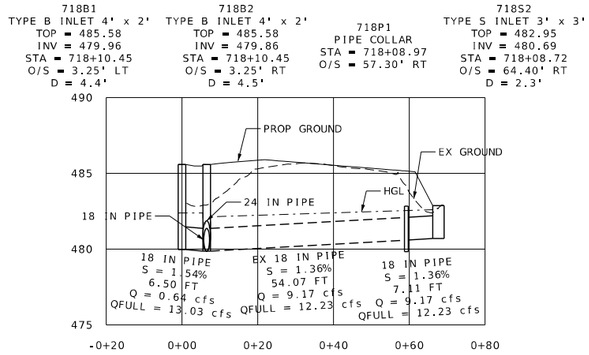

LINE 718-A

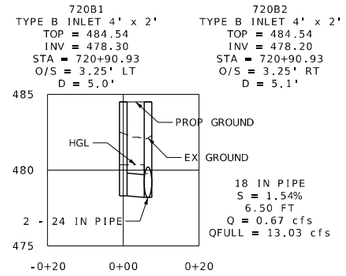

LINE 720-A

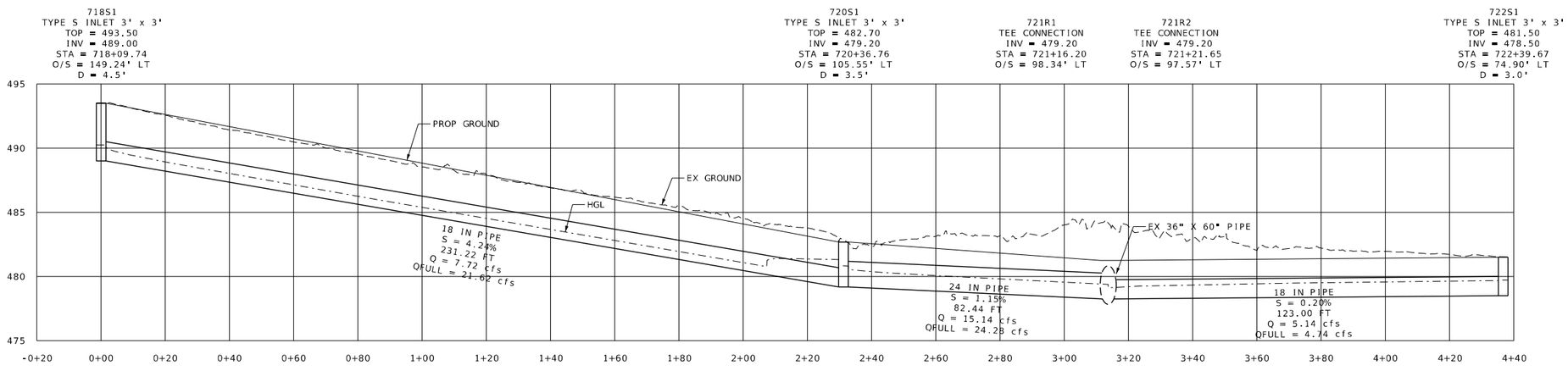

LINE 721-B

NOTES:

1) ALL PIPES TO BE GROUP A UNLESS OTHERWISE NOTED.
2) REFER TO PIPE LAYOUT DETAIL ON DRAINAGE GENERAL NOTES SHEET.
3) ALL SEWERS SHOWN SHALL BE MAINTAINED BY MODOT UNLESS OTHERWISE NOTED.
4) INLET STRUCTURE BASE TO BE SIZED APPROPRIATELY FOR INCOMING AND OUTGOING PIPES. SHOP DRAWINGS TO BE PROVIDED PRIOR TO CONSTRUCTION.

I-270 DRAINAGE PROFILES

SHEET 3 OF 5

STATE OF MISSOURI
DAVID RIECHMANN
NUMBER PE-2011000948
PROFESSIONAL ENGINEER

DATE PREPARED
3/25/2026

ROUTE	STATE
I-270	MO
DISTRICT	SHEET NO.
SL	79

COUNTY
ST. LOUIS

JOB NO.
J6I3020D

CONTRACT ID.

PROJECT NO.

BRIDGE NO.

DESCRIPTION	DATE

IF A SEAL IS PRESENT ON THIS SHEET IT HAS BEEN ELECTRONICALLY SEALED AND DATED.

MISSOURI HIGHWAYS AND TRANSPORTATION COMMISSION
105 WEST CAPITOL
JEFFERSON CITY, MO 65102
1-888-ASK-MODOT (1-888-275-6636)

HORNER SHIFRIN
401 S. 18TH ST., STE. 400 ST. LOUIS, MO 63103
314.241.4515 FAX 314.241.4666
WWW.HORNERSHIFRIN.COM
DISCIPLINE: PROFESSIONAL ENGINEERING
CERTIFICATE OF AUTHORITY: 000159
EXPIRATION DATE: DECEMBER 31, 2026

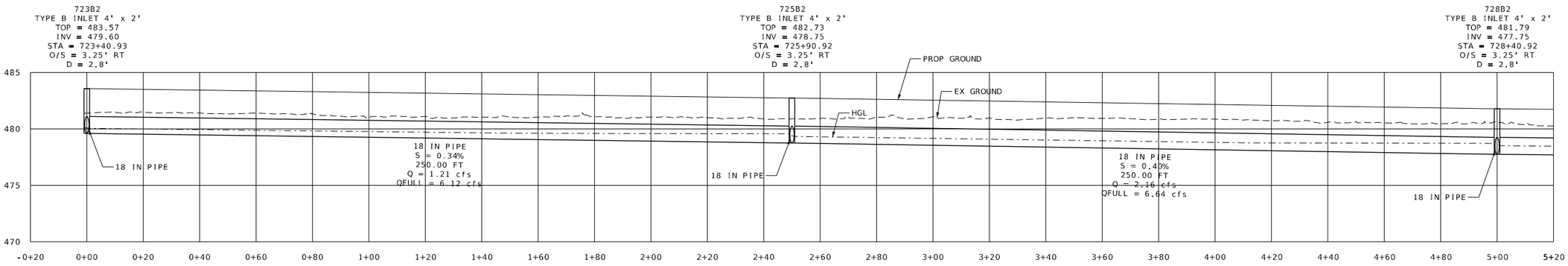

LINE 734-A

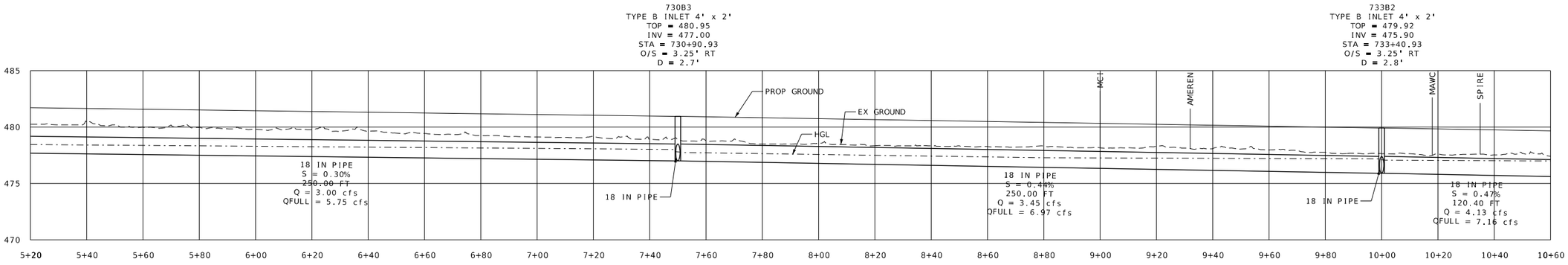

LINE 734-A (CONT)

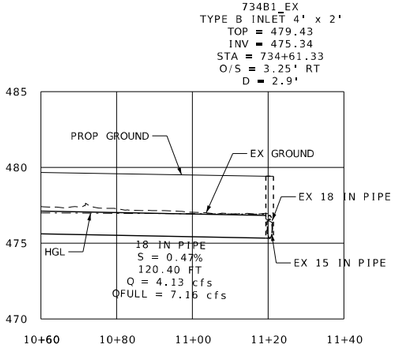

LINE 734-A (CONT)

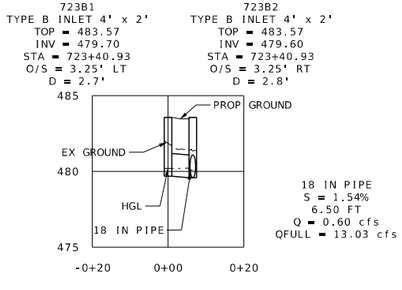

LINE 723-A

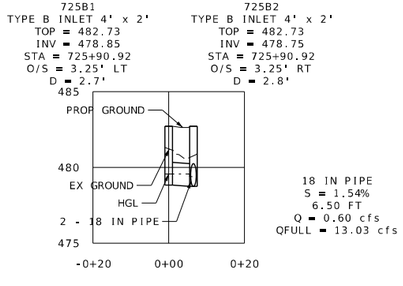

LINE 725-A

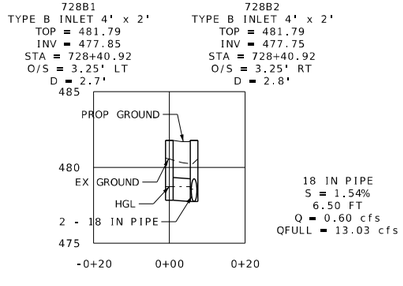

LINE 728-A

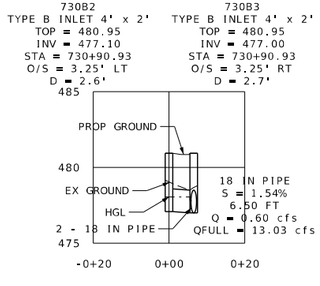

LINE 730-A

NOTES:

1) ALL PIPES TO BE GROUP A UNLESS OTHERWISE NOTED.
2) REFER TO PIPE LAYOUT DETAIL ON DRAINAGE GENERAL NOTES SHEET.
3) ALL SEWERS SHOWN SHALL BE MAINTAINED BY MODOT UNLESS OTHERWISE NOTED.
4) INLET STRUCTURE BASE TO BE SIZED APPROPRIATELY FOR INCOMING AND OUTGOING PIPES. SHOP DRAWINGS TO BE PROVIDED PRIOR TO CONSTRUCTION.

I-270 DRAINAGE PROFILES
SHEET 4 OF 5

STATE OF MISSOURI
DAVID RECHMANN
NUMBER PE-2011009848
PROFESSIONAL ENGINEER

DATE PREPARED
3/25/2026

ROUTE	STATE
I-270	MO
DISTRICT	SHEET NO.
SL	80

COUNTY
ST. LOUIS

JOB NO.
J6I3020D

CONTRACT ID.

PROJECT NO.

BRIDGE NO.

DESCRIPTION	DATE

IF A SEAL IS PRESENT ON THIS SHEET IT HAS BEEN ELECTRONICALLY SEALED AND DATED.

MISSOURI HIGHWAYS AND TRANSPORTATION COMMISSION

105 WEST CAPITOL
JEFFERSON CITY, MO 65102
1-888-ASK-MODOT (1-888-275-6636)

HORNER SHIFRIN

401 S. 18TH ST., STE. 400 ST. LOUIS, MO 63103
314-241-1976 FAX 314-241-1988
WWW.HORNERSHIFRIN.COM

DISCIPLINE: PROFESSIONAL ENGINEERING
CERTIFICATE OF AUTHORITY: 000159
EXPIRATION DATE: DECEMBER 31, 2026

c:\pwworking\central01\d4526806\022_DP04_J6I3020D_I50_I-270.dgn 10:12:38 AM 3/25/2026

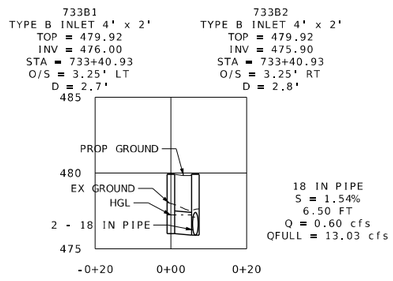

LINE 733-A

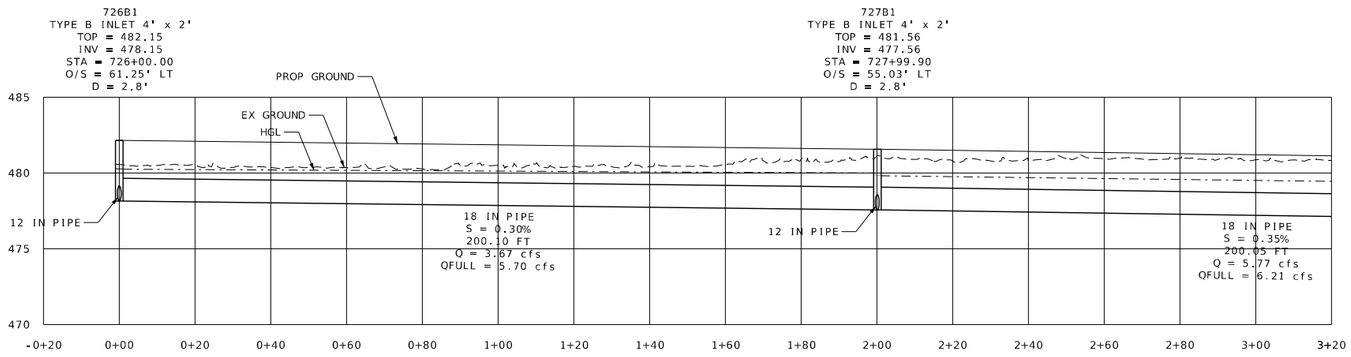

LINE 732-A

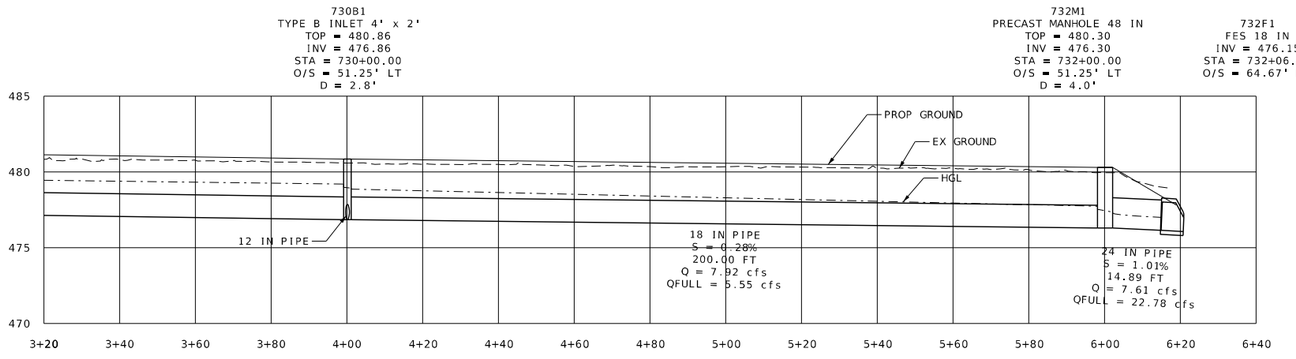

LINE 732-A (CONT)

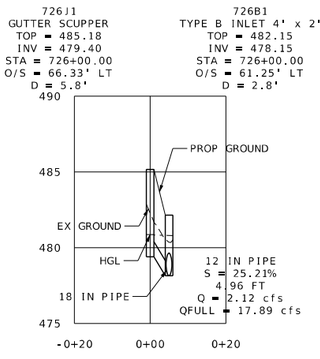

LINE 726-A

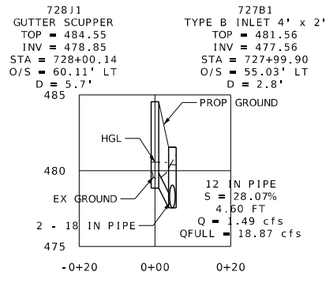

LINE 727-A

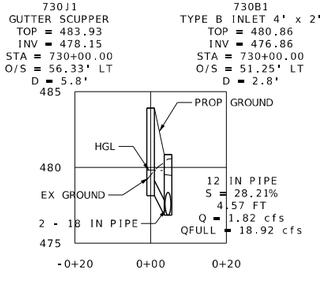

LINE 730-B

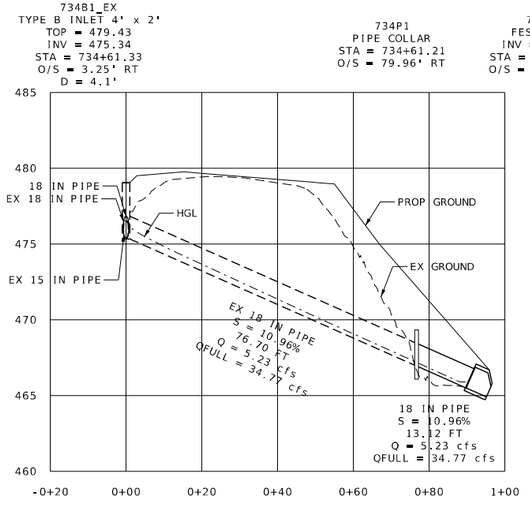

LINE 734-B

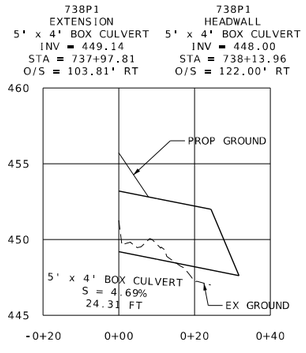

LINE 738-A

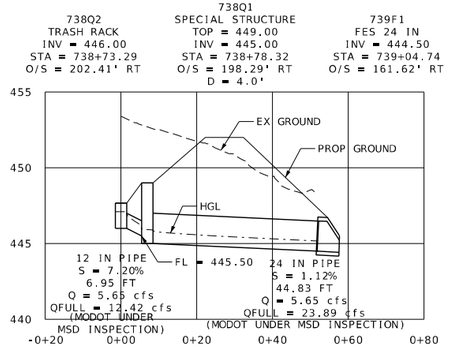

LINE 739-A

NOTES:
1) ALL PIPES TO BE GROUP A UNLESS OTHERWISE NOTED.
2) REFER TO PIPE LAYOUT DETAIL ON DRAINAGE GENERAL NOTES SHEET.
3) ALL SEWERS SHOWN SHALL BE MAINTAINED BY MODOT UNLESS OTHERWISE NOTED.
4) INLET STRUCTURE BASE TO BE SIZED APPROPRIATELY FOR INCOMING AND OUTGOING PIPES. SHOP DRAWINGS TO BE PROVIDED PRIOR TO CONSTRUCTION.

I-270 DRAINAGE PROFILES
SHEET 5 OF 5

STATE OF MISSOURI
DAVID RIECHMANN
NUMBER PE-2011000848
PROFESSIONAL ENGINEER

DATE PREPARED
3/25/2026

ROUTE	STATE
I-270	MO
DISTRICT	SHEET NO.
SL	81

COUNTY
ST. LOUIS

JOB NO.
J6I3020D

CONTRACT ID.

PROJECT NO.

BRIDGE NO.

DESCRIPTION	DATE

IF A SEAL IS PRESENT ON THIS SHEET IT HAS BEEN ELECTRONICALLY SEALED AND DATED.

MISSOURI HIGHWAYS AND TRANSPORTATION COMMISSION

105 WEST CAPITOL
JEFFERSON CITY, MO 65102
1-888-ASK-MODOT (1-888-275-6636)

HORNER SHIFRIN
401 S. 18TH ST., STE. 400 ST. LOUIS, MO 63103
314-241-1976 FAX 314-241-1966
WWW.HORNERSHIFRIN.COM
DISCIPLINE: PROFESSIONAL ENGINEERING
CERTIFICATE OF AUTHORITY: 000169
EXPIRATION DATE: DECEMBER 31, 2026

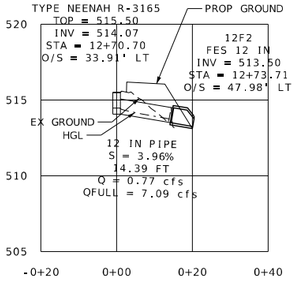

LINE 12-B

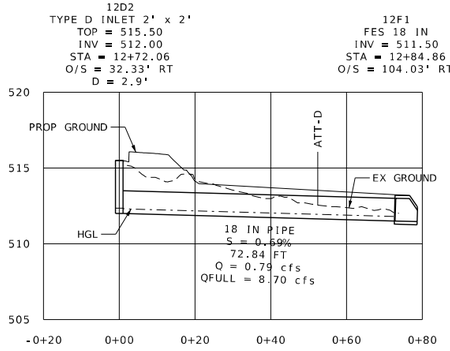

LINE 12-A

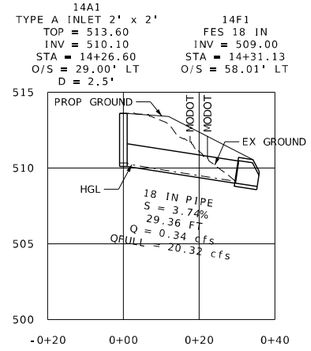

LINE 14-A

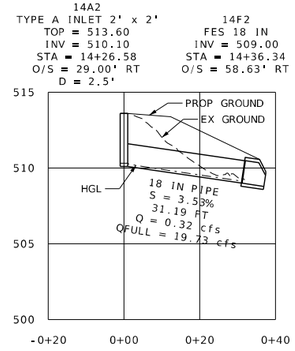

LINE 14-B

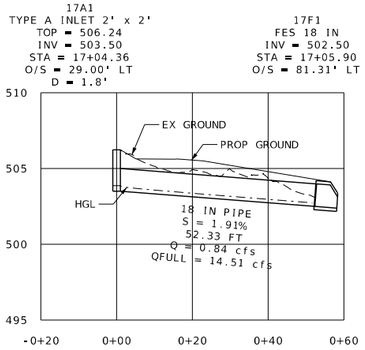

LINE 17-A

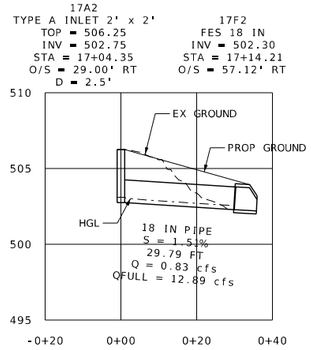

LINE 17-B

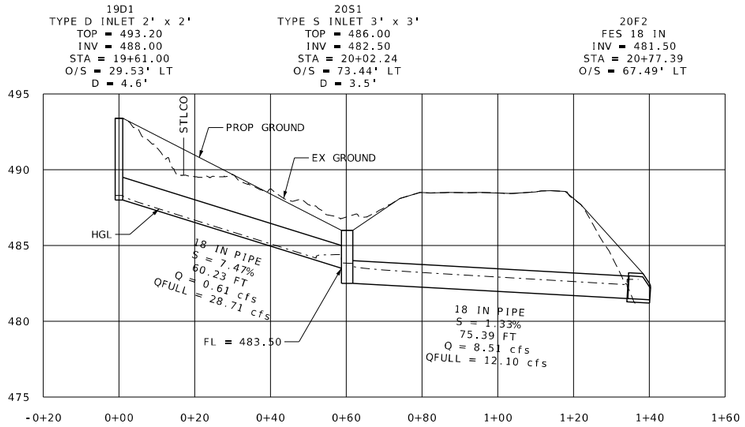

LINE 20-A

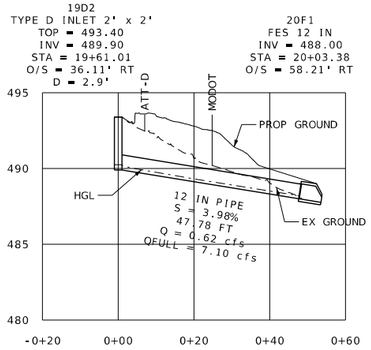

LINE 20-B

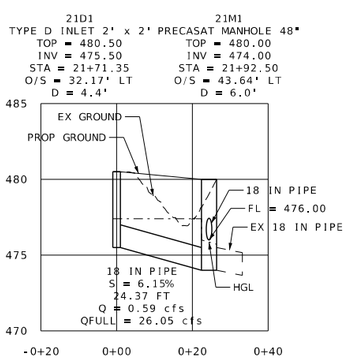

LINE 21-A

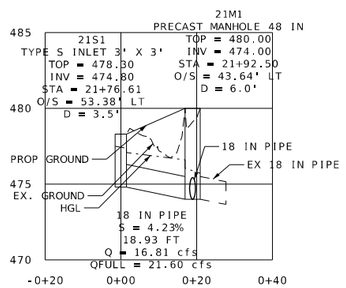

LINE 21-B

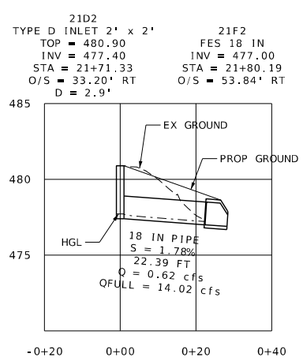

LINE 21-C

NOTES:
1) ALL PIPES TO BE GROUP A UNLESS OTHERWISE NOTED.
2) REFER TO PIPE LAYOUT DETAIL ON DRAINAGE GENERAL NOTES SHEET.
3) ALL SEWERS SHOWN SHALL BE MAINTAINED BY MODOT UNLESS OTHERWISE NOTED.
4) INLET STRUCTURE BASE TO BE SIZED APPROPRIATELY FOR INCOMING AND OUTGOING PIPES. SHOP DRAWINGS TO BE PROVIDED PRIOR TO CONSTRUCTION.

LILAC AVE
DRAINAGE PROFILES
SHEET 1 OF 1

STATE OF MISSOURI
DAVID RIECHMANN
NUMBER PE-2011000948
PROFESSIONAL ENGINEER

DATE PREPARED: 3/25/2026
ROUTE: I-270 | STATE: MO
DISTRICT: SL | SHEET NO.: 82
COUNTY: ST. LOUIS
JOB NO.: J6I3020D
CONTRACT ID.:
PROJECT NO.:
BRIDGE NO.:

DESCRIPTION | DATE

IF A SEAL IS PRESENT ON THIS SHEET IT HAS BEEN ELECTRONICALLY SEALED AND DATED.

MISSOURI HIGHWAYS AND TRANSPORTATION COMMISSION
105 WEST CAPITOL
JEFFERSON CITY, MO 65102
1-888-ASK-MODOT (1-888-275-6636)

HORNER SHIFRIN
401 S. 18TH ST., STE. 400 ST. LOUIS, MO 63103
314-241-1976 FAX 314-241-1988
WWW.HORNERSHIFRIN.COM
DISCIPLINE: PROFESSIONAL ENGINEERING
CERTIFICATE OF AUTHORITY: 000159
EXPIRATION DATE: DECEMBER 31, 2026

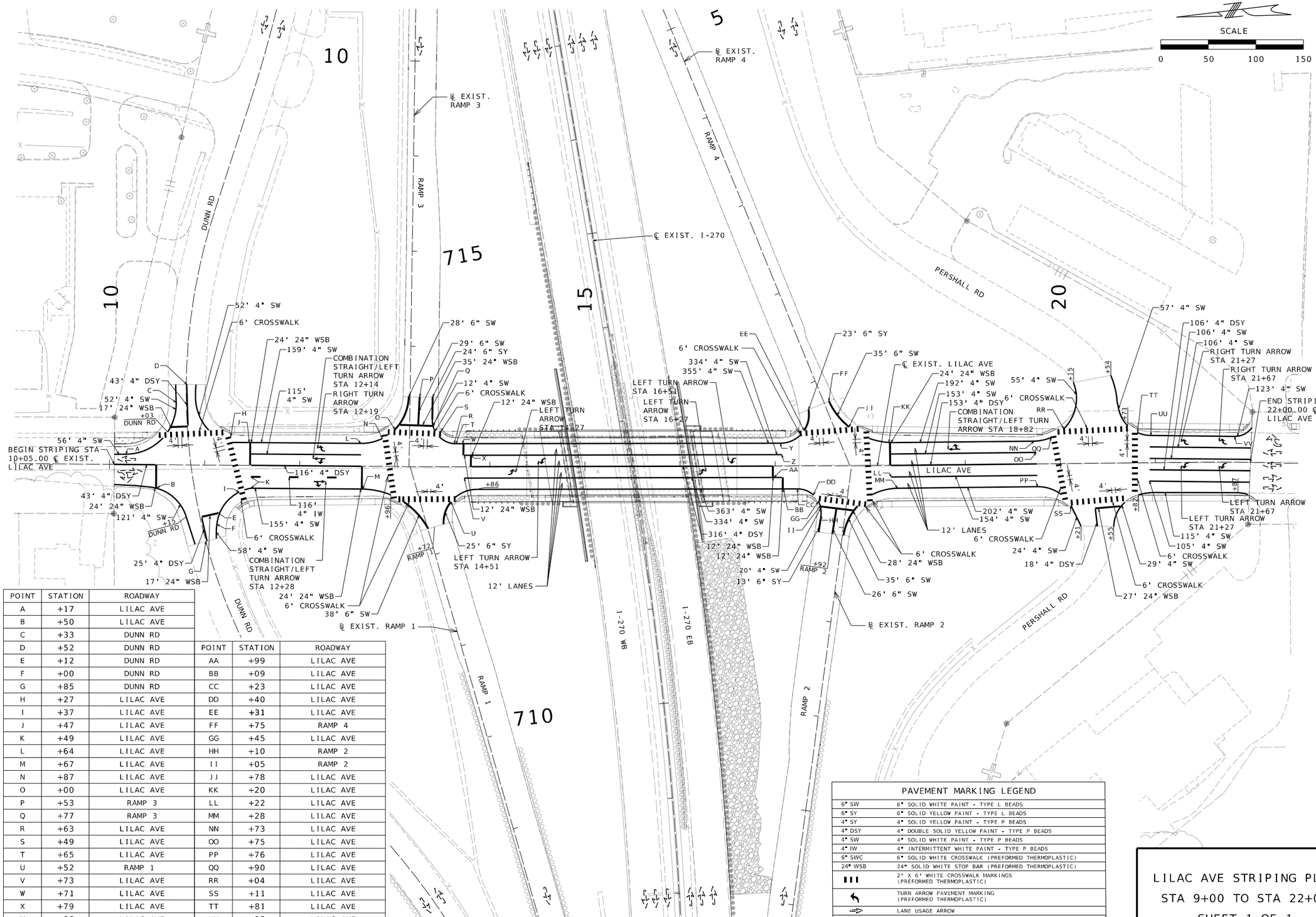

POINT	STATION	ROADWAY
A	+17	LILAC AVE
B	+50	LILAC AVE
C	+33	DUNN RD
D	+52	DUNN RD
E	+12	DUNN RD
F	+00	DUNN RD
G	+85	DUNN RD
H	+27	LILAC AVE
I	+37	LILAC AVE
J	+47	LILAC AVE
K	+49	LILAC AVE
L	+64	LILAC AVE
M	+67	LILAC AVE
N	+87	LILAC AVE
O	+00	LILAC AVE
P	+53	RAMP 3
Q	+77	RAMP 3
R	+63	LILAC AVE
S	+49	LILAC AVE
T	+65	LILAC AVE
U	+52	RAMP 1
V	+73	LILAC AVE
W	+71	LILAC AVE
X	+79	LILAC AVE
Y	+06	LILAC AVE
Z	+07	LILAC AVE

POINT	STATION	ROADWAY
AA	+99	LILAC AVE
BB	+09	LILAC AVE
CC	+23	LILAC AVE
DD	+40	LILAC AVE
EE	+31	LILAC AVE
FF	+75	RAMP 4
GG	+45	LILAC AVE
HH	+10	RAMP 2
II	+05	RAMP 2
JJ	+78	LILAC AVE
KK	+20	LILAC AVE
LL	+22	LILAC AVE
MM	+28	LILAC AVE
NN	+73	LILAC AVE
OO	+75	LILAC AVE
PP	+76	LILAC AVE
QQ	+90	LILAC AVE
RR	+04	LILAC AVE
SS	+11	LILAC AVE
TT	+81	LILAC AVE
UU	+95	LILAC AVE
VV	+83	LILAC AVE

PAVEMENT MARKING LEGEND

6" SW	6" SOLID WHITE PAINT - TYPE L BEADS
6" SY	6" SOLID YELLOW PAINT - TYPE L BEADS
4" SY	4" SOLID YELLOW PAINT - TYPE P BEADS
4" DSY	4" DOUBLE SOLID YELLOW PAINT - TYPE P BEADS
4" SW	4" SOLID WHITE PAINT - TYPE P BEADS
4" IW	4" INTERMITTENT WHITE PAINT - TYPE P BEADS
6" SWC	6" SOLID WHITE CROSSWALK (PREFORMED THERMOPLASTIC)
24" WSB	24" SOLID WHITE STOP BAR (PREFORMED THERMOPLASTIC)
	2" X 6" WHITE CROSSWALK MARKINGS (PREFORMED THERMOPLASTIC)
	TURN ARROW PAVEMENT MARKING (PREFORMED THERMOPLASTIC)
	LANE USAGE ARROW

NOTES:
1) BLACK CONTRAST MARKINGS ARE REQUIRED FOR ALL LANE LINES ON CONCRETE PAVEMENT (NO DIRECT PAY).
2) I-270 STRIPING PLAN SHOWN ON J613580B.

LILAC AVE STRIPING PLAN
STA 9+00 TO STA 22+00
SHEET 1 OF 1

STATE OF MISSOURI
EUGENE LOUIS KUELKER JR.
NUMBER PE-2010000912
PROFESSIONAL ENGINEER

THIS SHEET HAS BEEN SIGNED, SEALED, AND DATED ELECTRONICALLY.

DATE PREPARED: 3/25/2026

ROUTE	STATE
I-270	MO
DISTRICT	SHEET NO.
SL	83

COUNTY: ST. LOUIS
JOB NO.: J6I3020D
CONTRACT ID.:
PROJECT NO.:
BRIDGE NO.:

DESCRIPTION	DATE

IF A SEAL IS PRESENT ON THIS SHEET IT HAS BEEN ELECTRONICALLY SEALED AND DATED.

MISSOURI HIGHWAYS AND TRANSPORTATION COMMISSION
105 WEST CAPITOL
JEFFERSON CITY, MO 65102
1-888-ASK-MODOT (1-888-275-6636)

HDR Engineering, Inc.
1001 Highlands Plaza Drive
Suite 200
St. Louis, MO 63110-1337
314-425-8300
Certificate of Authority: 000856

GENERAL NOTES

1. BASELINES SHOWN ON PLANS ARE FOR INFORMATION PURPOSES ONLY AND ARE NOT STAKED IN THE FIELD.

2. FOR SYSTEM COMMUNICATION REQUIREMENTS, SEE COMMUNICATION PLANS AND SPECIAL PROVISIONS.

3. ALL BRIDGE CONDUIT RUNS SHALL NOT EXCEED 270° OF BENDS. CONDUITS OR OTHER ENTERABLE FITTINGS SHALL BE INCLUDED IN COST OF CONDUIT.

4. CONTRACTOR SHALL MAINTAIN 2' CONDUIT CLEARANCE FROM ALL LANDSCAPED FEATURES EXISTING WITHIN THE RIGHT OF WAY. ANY LANDSCAPING DISTURBED DURING CONSTRUCTION ACTIVITIES SHALL BE RESTORED TO ORIGINAL CONDITION AT THE EXPENSE OF THE CONTRACTOR.

5. CONTRACTOR SHALL COORDINATE THEIR ACTIVITIES WITH OTHER CONTRACTORS IN THE AREA.

6. THE MAINTAINING AGENCY IS THE MISSOURI HIGHWAYS AND TRANSPORTATION COMMISSION (MHTC).

7. ALL UTILITIES SHALL BE LOCATED AND MARKED PRIOR TO INITIATION OF CONSTRUCTION PER SITE. THE CONTRACTOR SHALL BE RESPONSIBLE FOR CONTACTING UTILITIES AND LOCATOR SERVICES AND SCHEDULING THE LOCATION OF UNDERGROUND UTILITIES. THE CONTRACTOR SHALL ALSO CONTACT ANY AND ALL UTILITIES AND LOCAL GOVERNMENT AGENCIES NOT PARTICIPATING IN LOCATION SERVICES.

8. PROPOSED ITS EQUIPMENT LOCATIONS ARE APPROXIMATE AND MAY BE MODIFIED TO AVOID CONFLICTS WITH UNDERGROUND UTILITIES OR OTHER OBSTRUCTIONS. THE CONTRACTOR SHALL RECEIVE APPROVAL FROM THE ENGINEER PRIOR TO REVISING THE LOCATION OF ANY OF THE ITS EQUIPMENT.

9. LOCATION OF ITS EQUIPMENT ON THE PLANS BY THE ENGINEER HAS BEEN PERFORMED WITHOUT FULL CONSIDERATION OF EXISTING UNDERGROUND UTILITIES. IT SHALL BE THE CONTRACTOR'S RESPONSIBILITY TO DETERMINE ANY CONFLICTS WITH EXISTING UTILITIES AT SITES IN THE FIELD PRIOR TO INITIATION OF CONSTRUCTION PER SITE. THE CONTRACTOR IS RESPONSIBLE FOR CONTACTING THE ENGINEER UPON DETERMINATION OF ANY UTILITY CONFLICTS.

10. ALL ITS EQUIPMENT CALLED OUT BY PLANS AND SPECIFICATIONS AS "INSTALL" EQUIPMENT, INCLUDING DETECTOR ASSEMBLIES, CCTV ASSEMBLIES, ETHERNET SWITCHES, AND DMS ASSEMBLIES, SHALL INCLUDE ALL TRANSPORTATION, INSTALLATION AND TESTING OF MISSOURI DEPARTMENT OF TRANSPORTATION FURNISHED EQUIPMENT IN ACCORDANCE WITH THE SPECIFICATIONS.

11. ALL TRAFFIC CONTROL PLANS AND LANE CLOSURES SHALL BE PRE-APPROVED BY THE ENGINEER.

12. ALL WORK SHALL INCLUDE THE RESTORATION OF ANY DISTURBED AREAS AS DIRECTED BY THE ENGINEER. ALL GRADING WORK SHALL PROVIDE POSITIVE DRAINAGE.

13. IT SHALL BE THE CONTRACTOR'S RESPONSIBILITY TO REPAIR ANY EXISTING CONDUIT, CONDUCTORS OR OTHER FACILITIES DAMAGED DURING CONSTRUCTION. ALL EXISTING IMPROVEMENTS NOT SPECIFICALLY IDENTIFIED AS BEING REMOVED OR RELOCATED IN THE PLANS THAT ARE DISTURBED OR OTHERWISE DAMAGED BY THE CONTRACTOR SHALL BE REPLACED IN KIND BY THE CONTRACTOR, WITH NO ADDITIONAL COMPENSATION.

14. THE PLANS DEPICT CONDUIT ROUTING IN SCHEMATIC FORM ONLY. THE CONTRACTOR SHALL DETERMINE FINAL ROUTING BASED ON ACTUAL FIELD CONDITIONS PRIOR TO CONSTRUCTION AT EACH SITE, INCLUDING UTILITY LOCATOR SERVICE MARKINGS, TO PREVENT CONFLICTS WITH EXISTING UTILITIES.

15. ALL CONDUITS SHALL BE NEW. SINGLE CELL CONDUITS ON BRIDGES SHALL BE RIGID GALVANIZED STEEL.

16. PULL ROPES ARE REQUIRED IN ALL EMPTY CONDUIT CELLS. PULL ROPES SHALL BE POLYPROPYLENE WITH A MINIMUM TENSILE STRENGTH OF 600 POUNDS.

17. THE CONTRACTOR SHALL FIELD REVIEW NECESSARY ROUTING, MOUNTING HARDWARE, INCLUDING BRIDGE HANGERS, FITTINGS, EXPANSION JOINTS AND JUNCTION BOXES FOR ALL EXTERNALLY MOUNTED CONDUITS PRIOR TO SUBMITTAL OF BID TO DETERMINE THE TYPES AND EXTENT OF INCIDENTAL ITEMS TO BE INCLUDED IN THE UNIT PRICE OF CONDUIT.

18. THE CONTRACTOR SHALL FIELD REVIEW NECESSARY ROUTING OF CONDUIT AND LOCATION OF PULL BOXES PRIOR TO SUBMITTAL OF BID TO DETERMINE THE TYPES AND EXTENT OF INCIDENTAL REMOVAL, RELOCATION AND REPLACEMENT ITEMS TO BE INCLUDED IN THE UNIT PRICE OF CONDUIT AND PULL BOXES.

19. WARNING TAPE IS REQUIRED IN ALL TRENCHES CONTAINING CONDUIT.

20. JACKETED #14 AWG XHHW-2 SOLID STANDARD BLUE LOCATOR WIRE SHALL BE PLACED IN ALL UNDERGROUND NON-METALLIC CONDUITS BONDED TO GROUNDING RODS WITHIN A PULL BOX. APPROVED LOCATOR WIRE SHALL BE MOUNTED TO THE SIDE WALL OF EACH PULL BOX.

21. CONTRACTOR MAY BORE OR HORIZONTALLY DRILL WHEREVER TRENCHING IS SHOWN AT THE CONTRACTOR'S EXPENSE.

22. GROUND CONDUCTOR SHALL BE 1/C #6 UNLESS OTHERWISE NOTED ON THE PLANS.

23. EXPANSION FITTING SHALL BE PROVIDED WHEN CONDUIT PASSES ACROSS EXISTING EXPANSION DEVICES AND FILLED JOINTS ON BRIDGES INCLUDING FILLED JOINTS IN SAFETY BARRIER CURBS. THE DISTANCE BETWEEN EXPANSION FITTINGS SHALL NOT BE GREATER THAN 150 FEET. EXPANSION FITTINGS ON CONDUIT SHALL PROVIDE A MINIMUM MOVEMENT IN EITHER DIRECTION OF 4" AT OPEN JOINTS, BETWEEN ABUTMENT AND SUPER-STRUCTURES ENCOUNTERED AFTER RISING OUT OF THE GROUND AND 2" AT FILLED JOINTS. EXPANSION FITTINGS SHALL BE PROVIDED WITH A 2' BONDING JUMPER AROUND FITTING. BONDING JUMPER SHALL BE COMPATIBLE WITH CONDUIT MATERIAL. LIQUID TIGHT FLEXIBLE METAL CONDUIT SHALL BE USED IN LOCATIONS WHERE CONDUIT CROSSES OVER BRIDGE SUPERSTRUCTURE, SUBSTRUCTURE OR SIGN STRUCTURES, OR AS OTHERWISE SHOWN IN THE PLANS.

24. THE GALVANIZED CONE EXPANSION ANCHOR SYSTEM SHALL BE USED FOR ATTACHING CONDUIT SUPPORTS AND JUNCTION BOXES TO STRUCTURAL CONCRETE.

25. ALL GROUNDING SYSTEMS SHALL BE IN ACCORDANCE WITH THE NATIONAL ELECTRICAL CODE.

26. SLACK FIBER OPTIC CABLE SHALL BE STORED ACCORDING TO THE SPECIAL PROVISIONS. 20' OF SLACK FIBER OPTIC CABLE SHALL BE STORED IN EVERY PULL BOX. FOR EACH FIBER OPTIC CABLE THAT ENTERS A PULL BOX ADJACENT TO A CABINET, 60' OF SLACK CABLE SHALL BE STORED.

27. THE LOG MILE SYSTEM USED FOR THE NAMING CONVENTION OF THE DEVICES REFLECTS THE WEST TO EAST AND NORTH TO SOUTH CONTINUOUS LOG CONVENTION USED FOR THE INTERSTATE SYSTEM, BEGINNING WITH 0 AT THE WEST AND SOUTH ENDS OF A ROUTE.

28. THE CONTRACTOR SHALL MAINTAIN POWER AND COMMUNICATIONS TO EXISTING ITS DEVICES. THE ONLY EXCEPTION SHALL BE WHEN THE CONTRACTOR IS REPLACING A DMS, MODIFYING ELECTRICAL CIRCUITS OR MODIFYING FIBER OPTIC NETWORK CONNECTIONS. NOTIFY THE ENGINEER AT LEAST 7 DAYS BEFORE EXISTING DMS ARE TAKEN OUT OF SERVICE.

29. TRENCH EXCAVATION AND DIRECTIONAL DRILLING REQUIRED FOR THE INSTALLATION OF CONDUITS SHALL INCLUDE THE RESTORATION OF THE AREA IN ACCORDANCE WITH THE SPECIFICATIONS. THE RESTORATION SHALL INCLUDE FENCE REMOVAL AND REPLACEMENT, SIGN RELOCATION, UNDERDRAINS, AND RIPRAP OR OTHER EXISTING SLOPE PROTECTION APPURTENANCE.

30. TREES AND SHRUBS DAMAGED BY THE CONTRACTOR SHALL BE REPLACED IN KIND AT THE CONTRACTOR'S EXPENSE, AS DIRECTED BY THE ENGINEER.

31. ALL ELECTRICAL CABLES IN PULL BOXES AND EQUIPMENT CABINETS SHALL BE PROVIDED WITH INDIVIDUAL BRASS TAGS, DIE STAMPED WITH PHASE AND CIRCUIT IDENTIFICATIONS.

LOG MILE ID

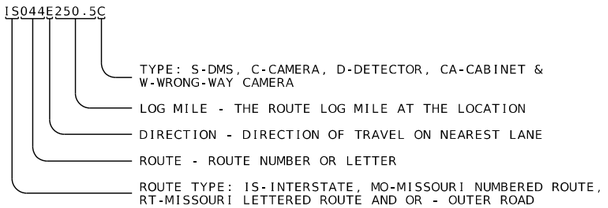

LEGEND

	EXISTING	PROPOSED
DYNAMIC MESSAGE SIGN		
DETECTOR, MICROWAVE		
DETECTOR, CONTINUOUS TRAFFIC COUNT		
CCTV CAMERA		
WRONG WAY DRIVING (WWD) CAMERA		
POLE-MOUNTED FIELD TERMINAL CABINET		
BASE-MOUNTED FIELD TERMINAL CABINET		
DETECTION ZONE		
CONDUIT, TRENCH		
CONDUIT, DIRECTIONAL DRILL		
CONDUIT, EXTERNAL ON STRUCTURE		
CONDUIT, ABANDON		
PULLBOX, CLASS 1 PREFORMED		
CLASS 2 ITS PULLBOX		
CLASS 5 ITS PULLBOX		
POLE		
POWER SUPPLY PEDESTAL		
WIRELESS ACCESS POINT		
FIBER DELINEATOR		
UNINTERRUPTIBLE POWER SUPPLY (UPS)		

ACRONYMS

(R)-REMOVAL
(UIP)-USE IN PLACE
SMFO- SINGLE MODE FIBER OPTIC

ITS GENERAL NOTES
SHEET 1 OF 1

STATE OF MISSOURI
CHARLES A. MILLER
NUMBER E-2002000606
REGISTERED PROFESSIONAL ENGINEER
3/20/2026

MISSOURI HIGHWAYS AND TRANSPORTATION COMMISSION
105 WEST CAPITOL
JEFFERSON CITY, MO 65102
1-888-ASK-MODOT (1-888-275-6636)

HNTB
715 KIRK DRIVE
KANSAS CITY, MO 64105-1310
CERTIFICATE OF AUTHORITY
NO. 001270

DATE PREPARED	3/20/2026
ROUTE	STATE
I-270	MO
DISTRICT	SHEET NO.
SL	84
COUNTY	ST. LOUIS
JOB NO.	J613020D
CONTRACT ID.	
PROJECT NO.	-
BRIDGE NO.	

DESCRIPTION	DATE

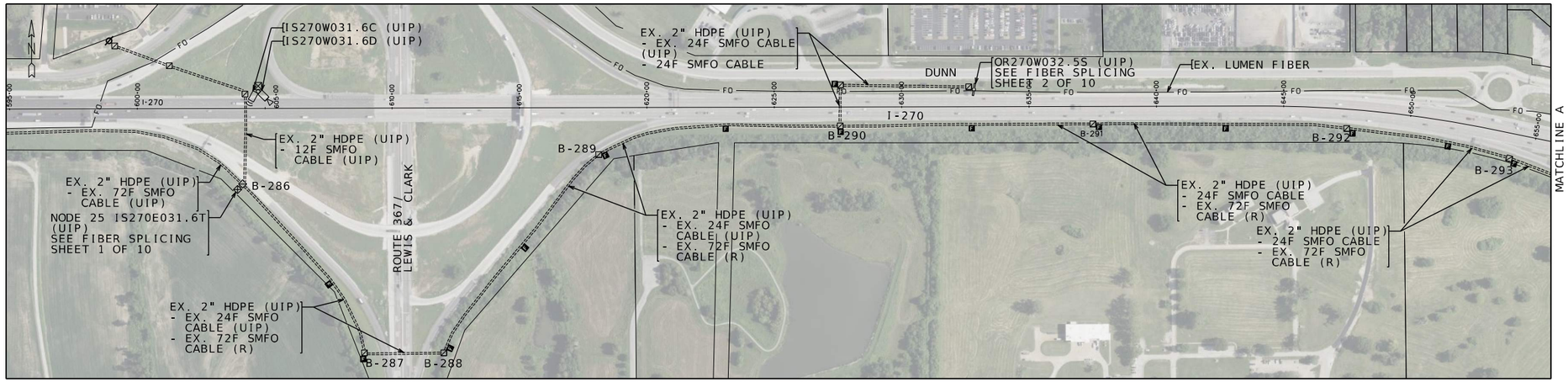

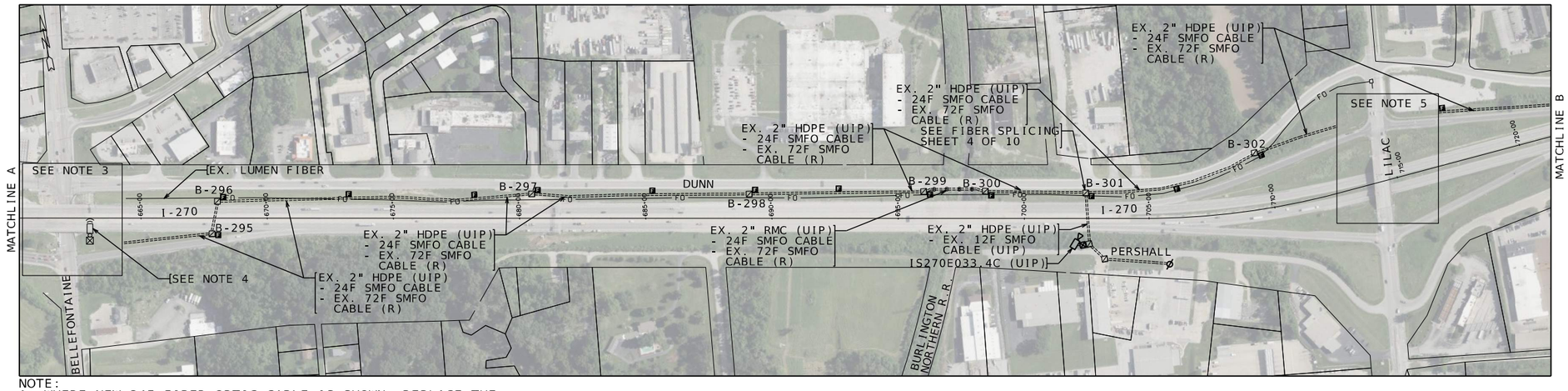

NOTE:
1. WHERE NEW 24F FIBER OPTIC CABLE IS SHOWN, REPLACE THE EXISTING 72F FIBER OPTIC CABLE IN EXISTING CONDUIT.
2. TERMINATE 24F FIBER OPTIC CABLE IN DMS CABINET IS270W032.5S. SEE FIBER SPLICING DETAIL SHEETS.
3. SEE PROJECT JSL0021 ITS PLAN SHEET FOR CONDUIT AND FIBER ROUTING AT INTERCHANGE.SEE FIBER SPLICING SHEET 3 OF 10 FOR FIBER SPLICING IN EXISTING SIGNAL CABINET.
4. REMOVE AND SALVAGE EXISTING POLE, CABINET AND RADAR UNIT. REMOVE AND DISPOSE OF CAT-5E CABLE.
5. SEE ITS PLAN SHEET 3 OF 3 FOR CONDUIT AND FIBER ROUTING AT INTERCHANGE. SEE FIBER SPLICING SHEETS 5 OF 10 TO 8 OF 10.

SCALE
0 250 500 750

STATE OF MISSOURI
CHARLES A. MILLER
NUMBER E-2002000606
REGISTERED PROFESSIONAL ENGINEER
3/20/2026

DATE PREPARED
3/20/2026

ROUTE	STATE
I-270	MO
DISTRICT	SHEET NO.
SL	85

COUNTY
ST. LOUIS

JOB NO.
J6I3020D

CONTRACT ID.

PROJECT NO.
-

BRIDGE NO.

DATE	DESCRIPTION	REV.

MISSOURI HIGHWAYS AND TRANSPORTATION COMMISSION
105 WEST CAPITOL
JEFFERSON CITY, MO 65102
1-888-ASK-MODOT (1-888-275-6636)

HNTB
715 KIRK DRIVE
KANSAS CITY, MO 64105-1310
CERTIFICATE OF AUTHORITY
NO. 001270

ITS PLAN
SHEET 1 OF 3

I-270_ITS_PLANS.dgn 9:17:33 AM 3/20/2026

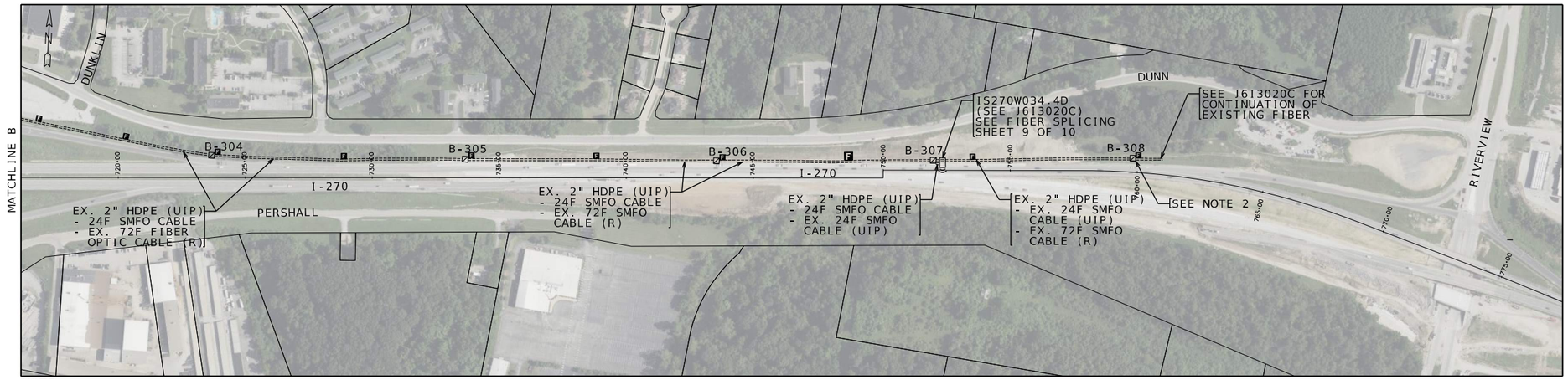

NOTE:
1. WHERE NEW 24F FIBER OPTIC CABLE IS SHOWN, REPLACE THE EXISTING 72F FIBER OPTIC CABLE IN EXISTING CONDUIT.
2. SPLICE ALL EXISTING FIBERS THROUGH IN EXISTING SPLICE CLOSURE. SEE FIBER SPLICE SHEET 10 OF 10.

SCALE
0 250 500 750

ITS PLAN
SHEET 2 OF 3

STATE OF MISSOURI
CHARLES A. MILLER
NUMBER E-2002000606
REGISTERED PROFESSIONAL ENGINEER
3/20/2026

DATE PREPARED
3/20/2026

ROUTE	STATE
I-270	MO
DISTRICT	SHEET NO.
SL	86

COUNTY
ST. LOUIS

JOB NO.
J613020D

CONTRACT ID.

PROJECT NO.
-

BRIDGE NO.

DESCRIPTION

DATE

REV.

MISSOURI HIGHWAYS AND TRANSPORTATION COMMISSION
105 WEST CAPITOL
JEFFERSON CITY, MO 65102
1-888-ASK-MODOT (1-888-275-6636)

HNTB
715 KIRK DRIVE
KANSAS CITY, MO 64105-1310
CERTIFICATE OF AUTHORITY
NO. 001270

I-270_ITS_PLANS.dgn 9:17:42 AM 3/20/2026

ITS LEGEND

- CONTROLLER
- ITS PULL BOX CLASS 5
- ITS PULL BOX CLASS 2
- PULL BOX EXISTING
- CONDUIT EXISTING
- CONDUIT PUSHED
- CONDUIT TRENCHED

NOTE: FOR CONDUIT, WIRING AND CONNECTIONS AT SIGNALS, SEE SIGNAL SHEETS

EX ROW

EX. MODOT 2" HDP (UIP) REPLACE EX. 72 SM WITH 24 SM FIBER CABLE

DUNN RD

℄ EXIST. DUNN RD

INSTALL CLASS 5 PULL BOX. INTERCEPT EXISTING CONDUIT AND 24F FIBER OPTIC CABLE.

MODOT 2" HDPE -24F FIBER OPTIC CABLE FOR TEMPORARY CONDUIT FOR USE DURING CONSTRUCTION

PROVIDE CONDUIT STUB OUT FOR PROPOSED SIGNAL CABINET

SEE JSP FOR SPLICING

SEE GROUND MOUNTED CABINET DETAIL FOR ENTRY

LUMEN FIBER OPTIC (DND)

PROPOSED SIGNAL CONTROLLER (SEE SIGNAL SHEETS)

MODOT 2" HDPE -24F FIBER OPTIC CABLE

MODOT 2" HDPE -24F FIBER OPTIC CABLE

S.L.

INSTALL CLASS 5 PULL BOX

MODOT 2" HDPE -24F FIBER OPTIC CABLE

SPLICE PROPOSED 24F FIBER OPTIC CABLE TO THE EXISTING 24F FIBER OPTIC CABLE

LUMEN FIBER OPTIC (DND)

EX ROW

RAMP 3

RAMP 4

℄ EXIST. RAMP 4

S.L.

℄ EXIST. I-270

INSTALL CONDUIT 1' BELOW BOTTOM OF GUARDRAIL POST

MODOT 2" HDPE -24F FIBER OPTIC CABLE

INSTALL CLASS 5 PULL BOX

MODOT 2" HDPE -24F FIBER OPTIC CABLE

PERSHALL RD

EX. MODOT 2" HDPE (ABANDON) -24F FIBER OPTIC CABLE (R)

EX PB5

PROVIDE CONDUIT STUB OUT FOR PROPOSED SIGNAL CABINET

MATCH EX. SPLICING

PULL EX. CABLE FROM CONTROLLER TO PULL BOX 6 AND PULL THROUGH NEW CONDUIT BACK TO CABINET

18" PIPE

S.L.

EX. STLCO HDPE & CABLE (UIP)

STLCO 3" HDPE -24F FIBER OPTIC CABLE

INSTALL TYPE 2 STLCO PULL BOX AND INTERCEPT STLCO CONDUIT AND FIBER

EX. STLCO 2" HDPE (R) -24F FIBER OPTIC CABLE (R)

EX. MODOT 2" HDPE (R) -72F FIBER OPTIC CABLE (R)

℄ EXIST. LILAC AVE

EX. MODOT 2"HDPE (UIP) -24F FIBER OPTIC CABLE -24F FIBER OPTIC CABLE (R)

MODOT 2" HDPE -24F FIBER OPTIC CABLE

EX PB1

EX. MODOT 2" HDPE (UIP) REPLACE EX. 72 SM WITH 24 SM FIBER CABLE

RAMP 1

℄ EXIST. RAMP 1

S.L.

RAMP 2

℄ EXIST. RAMP 2

PERSHALL RD

DUNN RD

EX ROW

1-270 WB

1-270 EB

SCALE

0 50 100 150

EXISTING SIGNAL CABINET WITH TEMPORARY EXTERNAL 3" CONDUIT DETAIL

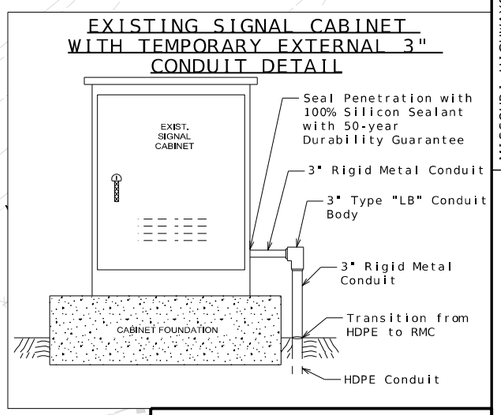

LILAC AVE ITS PLAN
SHEET 1 OF 1
STA 9+00 TO STA 22+00

STATE OF MISSOURI
TAYLOR C. McHENRY
NUMBER PE-2020006619
PROFESSIONAL ENGINEER

THIS SHEET HAS BEEN SIGNED, SEALED, AND DATED ELECTRONICALLY.

DATE PREPARED 3/25/2026

ROUTE	STATE
I-270	MO
DISTRICT	SHEET NO.
SL	87

COUNTY: ST. LOUIS

JOB NO.: J6I3020D

CONTRACT ID.

PROJECT NO.

BRIDGE NO.

DESCRIPTION	DATE

IF A SEAL IS PRESENT ON THIS SHEET IT HAS BEEN ELECTRONICALLY SEALED AND DATED.

MISSOURI HIGHWAYS AND TRANSPORTATION COMMISSION
105 WEST CAPITOL
JEFFERSON CITY, MO 65102
1-888-ASK-MODOT (1-888-275-6636)

HDR Engineering, Inc.
1001 Highlands Plaza Drive
Suite 200
St. Louis, MO 63110-1337
314-425-8300
Certificate of Authority: 000856

ITS PULL BOXES WITH CONCRETE PADS

CLASS 2 ITS PULLBOX WITH CONCRETE PAD

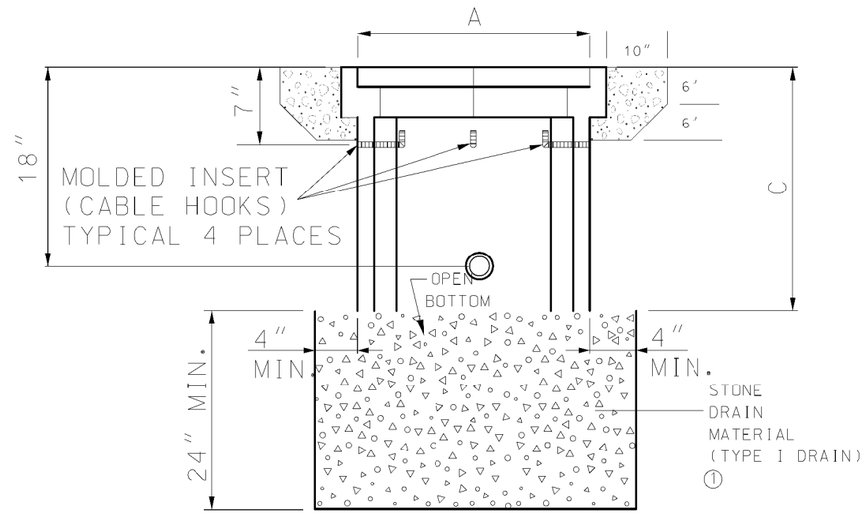

ELEVATION

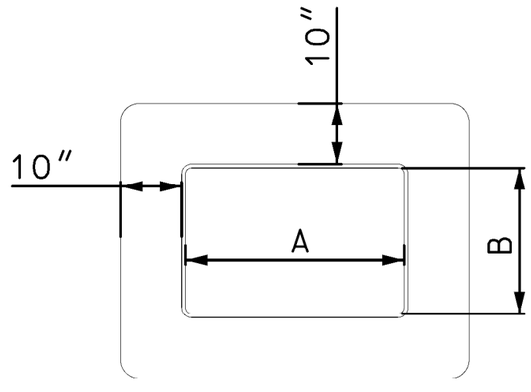

PLAN

FOR PULL BOX DIMENSIONS SEE STANDARD PLAN 902.20

CLASS 5 ITS PULLBOX WITH CONCRETE PAD

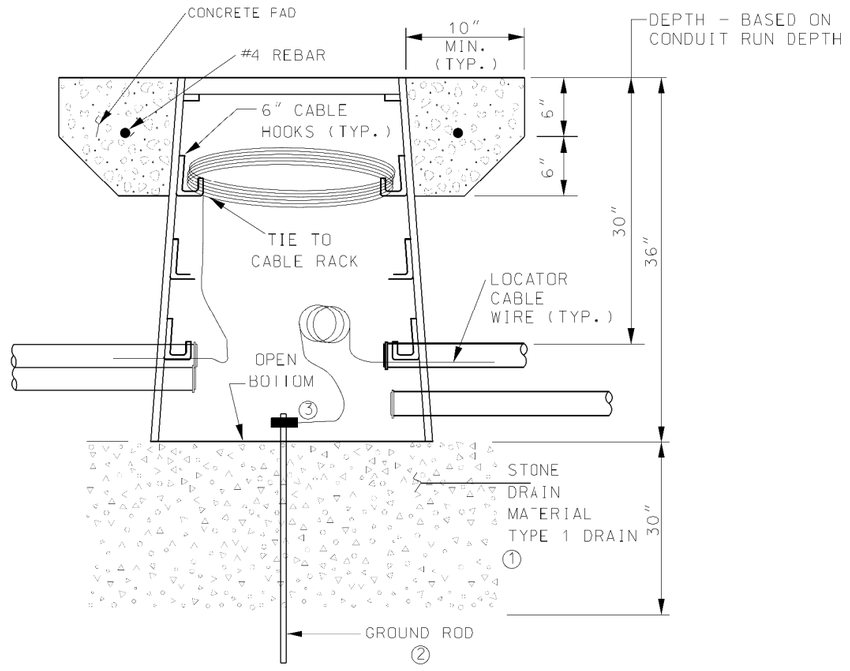

ELEVATION

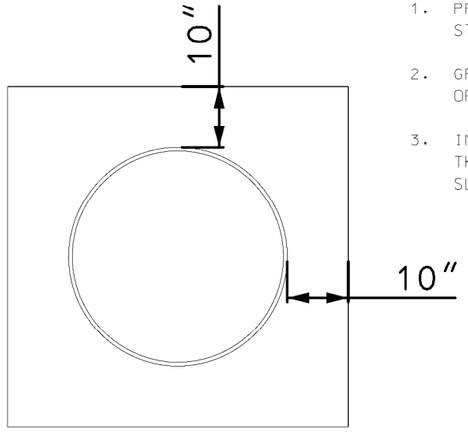

PLAN

1. PROVIDE TYPE II DRAIN AS DIRECTED BY ENGINEER. SEE STANDARD PLAN 902.20 FOR TYPE II DRAIN DETAILS.
2. GROUND ROD ONLY REQUIRED IN PULL BOX NEAREST TO AN ITS OR SIGNAL CABINET.
3. IN THE PULL BOX NEAREST THE ITS OR SIGNAL CABINET, CONNECT THE TRACER WIRE TO A GROUND ROD CLAMP AND PROVIDE 5 FEET OF SLACK.

DISCLAIMER
THE PROFESSIONAL WHOSE SIGNATURE AND PERSONAL SEAL APPEAR HEREON ASSUMES RESPONSIBILITY ONLY FOR WHAT APPEARS ON THIS PAGE, AND DISCLAIMS (PURSUANT TO SECTION 327.411 RSMO) SPECIFICATION, ESTIMATES, REPORTS, OR OTHER DOCUMENTS OR INSTRUMENTS NOT SEALED BY THE UNDERSIGNED PROFESSIONAL RELATING TO OR INTENDED TO BE USED FOR ANY PART OR PARTS OF THE PROJECT TO WHICH THIS PAGE REFERS.

STATE OF MISSOURI
TAYLOR C. McHENRY
NUMBER PE-2020006619
PROFESSIONAL ENGINEER

THIS SHEET HAS BEEN SIGNED, SEALED, AND DATED ELECTRONICALLY.

DATE PREPARED 3/25/2026

ROUTE	STATE
I-270	MO
DISTRICT	SHEET NO.
SL	88

COUNTY: ST. LOUIS
JOB NO.: J6I3020D
CONTRACT ID.:
PROJECT NO.:
BRIDGE NO.:

DATE	DESCRIPTION

IF A SEAL IS PRESENT ON THIS SHEET IT HAS BEEN ELECTRONICALLY SEALED AND DATED.

MISSOURI HIGHWAYS AND TRANSPORTATION COMMISSION
105 WEST CAPITOL
JEFFERSON CITY, MO 65102
1-888-ASK-MODOT (1-888-275-6636)

HDR Engineering, Inc.
1001 Highlands Plaza Drive
Suite 200
St. Louis, MO 63110-1337
314-425-8300
Certificate of Authority: 000856

MoDOT BURIED CABLE DRIVEABLE DELINEATOR POST

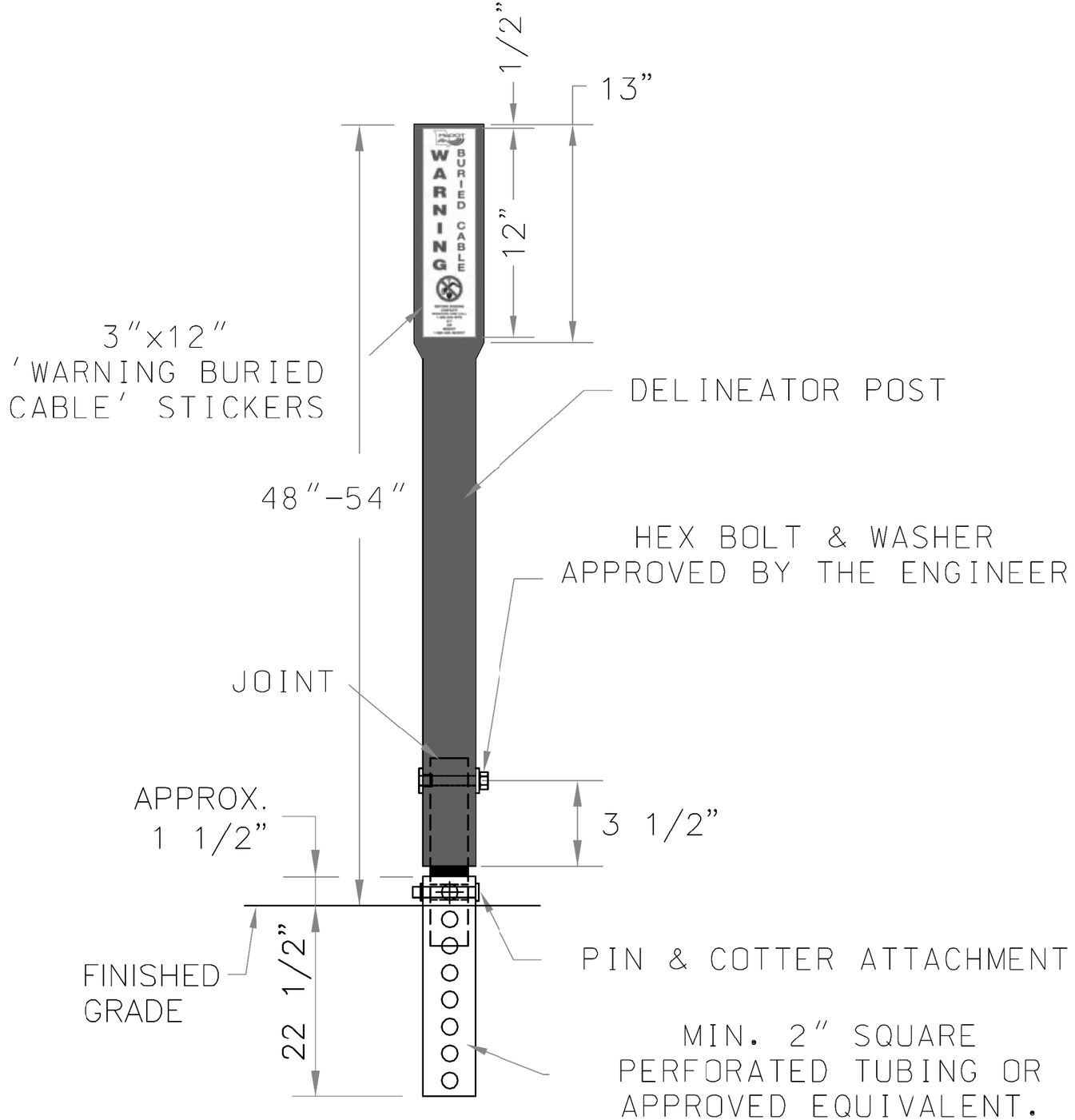

NOTES:
1. STICKERS TO BE OF A NON-REFLECTIVE MATERIAL/SHEETING.
2. STICKERS SHALL BE PROVIDED ON 1 SIDE OF POST FOR INTERSTATE ROUTES UNLESS SPECIFIED BY THE ENGINEER.
3. STICKERS SHALL BE PROVIDED ON BOTH SIDES OF POST FOR ARTERIAL ROUTES UNLESS SPECIFIED BY THE ENGINEER.
4. STICKERS TO BE INCLUDED IN COST OF A DELINEATOR POST.

MoDOT

WARNING BURIED CABLE

BEFORE DIGGING
CONTACT:
MISSOURI ONE CALL
1-800-DIG-RITE
811
OR
MODOT
1-888-ASK-MODOT

STATE OF MISSOURI
TAYLOR C. McHENRY
NUMBER PE-2070006619
PROFESSIONAL ENGINEER

THIS SHEET HAS BEEN SIGNED, SEALED, AND DATED ELECTRONICALLY.

DATE PREPARED: 3/25/2026

ROUTE	STATE
I-270	MO
DISTRICT	SHEET NO.
SL	89

COUNTY: ST. LOUIS
JOB NO.: J6I3020D
CONTRACT ID.:
PROJECT NO.:
BRIDGE NO.:

DESCRIPTION	DATE

IF A SEAL IS PRESENT ON THIS SHEET IT HAS BEEN ELECTRONICALLY SEALED AND DATED.

MISSOURI HIGHWAYS AND TRANSPORTATION COMMISSION
105 WEST CAPITOL
JEFFERSON CITY, MO 65102
1-888-ASK-MODOT (1-888-275-6636)

HDR Engineering, Inc.
1001 Highlands Plaza Drive
Suite 200
St. Louis, MO 63110-1337
314-425-8300
Certificate of Authority: 000856

PROJECT J6I3020D

PROJECT J6I3020D

IS270W031.6
ALL CONNECTIONS NOT SHOWN FOR CLARITY
SEE FIBER SPLICING AND BLOCK SHEET 1 OF 10

NODE 25

IS270W032.5
SEE FIBER SPLICING AND BLOCK SHEET 2 OF 10

IS270W033.1
NO WORK WITH THIS PROJECT

IS270W034.1
SEE FIBER SPLICING AND BLOCK SHEET 5, 7 OF 10

IS270W034.4
SEE FIBER SPLICING AND BLOCK SHEET 9 OF 10

IS270W035.4
NO WORK WITH THIS PROJECT

IS270W035.5
NO WORK WITH THIS PROJECT

IS270W035.5
NO WORK WITH THIS PROJECT

DMS
CCTV
DTB
UPS
MMU
IE3000
IE3300
E100
E10
2
24-FIBER SINGLE MODE CABLE (TYP.)
I-270
UNDERGROUND SPLICE IPB 301
SEE FIBER SPLICING AND BLOCK SHEET 4 OF 10
UNDERGROUND SPLICE IPB 308
SEE FIBER SPLICING AND BLOCK SHEET 10 OF 10
TO WELCOME CENTER
EX. 24-FIBER SINGLE MODE CABLE (TYP.)
EX. 24-FIBER SINGLE MODE CABLE (TYP.)
MC

MO367S003.6
NO WORK WITH THIS PROJECT

IS270E033.1
SEE FIBER SPLICING AND BLOCK SHEET 3 OF 10

IS270E033.4
NO WORK WITH THIS PROJECT

IS270E034.1
SEE FIBER SPLICING AND BLOCK SHEETS 6, 8 OF 10

IS270E035.4
NO WORK WITH THIS PROJECT

SWQ OF I-270 AND ROUTE 367
ROUTE 367
I-270 WEST OF BELLEFONTAINE
BELLEFONTAINE
WEST OF LILAC
LILAC
WEST OF RIVERVIEW
RIVERVIEW

SHADED AREA SHOW WORK FOR THIS PROJECT

COMMUNICATIONS PLAN

I-270
(SHEET 1 OF 1)

RT055E001.8T — DEVICE IDENTIFIER
CCTV / CCTV — EXISTING/ PROPOSED CCTV CAMERA
DMS — EXISTING DYNAMIC MESSAGE SIGN
5505 5505 — EXISTING/PROPOSED CISCO ASA5505
IE3000 IE3300 — EXISTING IE3000/ PROPOSED IE3300 CISCO SWITCH
BT — BLUETOOTH
EXISTING TRAFFIC SIGNAL CONTROLLER
MMU — EXISTING MALFUNCTION MANAGEMENT UNIT
CELL MODEM — EXISTING CELLULAR MODEM
EXISTING WIRELESS ETHERNET BRIDGE
POWER INJECTOR — EXISTING PROJECT INJECTOR
MC — EXISTING MEDIA CONVERTER
FO DATA MODEM — EXISTING FIBER OPTIC DATA MODEM
E10 — 10 MBPS ETHERNET
E100 — 100 MBPS ETHERNET
EXISTING VIDEO DETECTION SYSTEM
VDS AP — EXISTING SENSYS DETECTION SYSTEM
VD — EXISTING IP VIDEO ENCODER
DEVICE SERVER — EXISTING DEVICE SERVER
EXISTING RADAR DETECTION UNIT
MULTIMODE/ SINGLE MODE FIBER OPTIC CABLE
EXISTING WIRELESS CONNECTION
EXISTING/PROPOSED FUSION SPLICE
EXISTING CABLE
PROPOSED CABLE
DTB — EXISTING DYNAMIC TRAILBLAZER (DTB)

NOTE:
1) DASHED LINES INDICATE EXISTING EQUIPMENT OR CABLING.
2) ALL FIBER SPLICES ARE NOT SHOWN FOR CLARITY. SEE SPLICE DIAGRAMS.

STATE OF MISSOURI
CHARLES A. MILLER
NUMBER E-2002000606
REGISTERED PROFESSIONAL ENGINEER
3/20/2026

DATE PREPARED: 10/07/2025
ROUTE: 270 | STATE: MO
DISTRICT: SL | SHEET NO.: 90
COUNTY: ST. LOUIS
JOB NO.: J6I3020D
CONTRACT ID.:
PROJECT NO.:
BRIDGE NO.:

IF A SEAL IS PRESENT ON THIS SHEET IT HAS BEEN ELECTRONICALLY SEALED AND DATED.

DESCRIPTION | DATE | REV.

MISSOURI HIGHWAYS AND TRANSPORTATION COMMISSION
105 WEST CAPITOL
JEFFERSON CITY, MO 65102
1-888-ASK-MODOT (1-888-275-6636)

HNTB
715 KIRK DRIVE
KANSAS CITY, MO 64105
(816) 472-1201

J6I3020D_LocalComm_v1.vsd 10/07/2025

I-270 AT RT. 367
NODE 25
SHEET 1 OF 10

FIELD TERMINAL CABINET, TYPE 2,
IS270E031.6

Lat 38.76990°
Long -90.241069°

Ameren Meter #
037 298 21

UNINTERRUPTIBLE POWER SUPPLY (UPS)
RJ-45

-CAT-5E-

MO367S004.0

BELLEFONTAINE BUILDING

CISCO ASR920

24-FIBER CABLE SOUTH ON 367

BLUE TUBE

BLUE/BLUE
BLUE/ORANGE
BLUE/GREEN
BLUE/BROWN
BLUE/SLATE
BLUE/WHITE
BLUE/RED
BLUE/BLACK
BLUE/YELLOW
BLUE/VIOLET
BLUE/ROSE
BLUE/AQUA

ORANGE TUBE

12-FIBER DROP CABLE TO W031.6C

BLUE TUBE

BLUE/BLUE
BLUE/ORANGE
BLUE/GREEN
BLUE/BROWN
BLUE/SLATE
BLUE/WHITE
BLUE/RED
BLUE/BLACK
BLUE/YELLOW
BLUE/VIOLET
BLUE/ROSE
BLUE/AQUA

IS270E031.0
IS270E030.6
TO NODE 11
TO NODE 9
IS270E033.1
MO367S002.9
MO367N002.9
MO367S002.8
MO367S003.2
US367N006.25(DMS)
US367S006.7

BLUE TUBE
ORANGE TUBE
WHITE TUBE
SLATE TUBE
BROWN TUBE
GREEN TUBE
ORANGE TUBE
BLUE TUBE
BLUE TUBE
ORANGE TUBE
BLUE TUBE
ORANGE TUBE
BLUE TUBE
ORANGE TUBE

O4U/O5U COMBO

24 FIBER DISTRIBUTION CABLE WEST

72-FIBER TRUNK CABLE TO WEST

24 FIBER DISTRIBUTION CABLE EAST I-270 EB & 367 SIGNAL

24-FIBER DISTRIBUTION CABLE TO 367 NORTH TO DUNN SIGNAL

24-FIBER DISTRIBUTION CABLE TO 367 ITS

STATE OF MISSOURI
CHARLES A. MILLER
NUMBER E-2002000606
REGISTERED PROFESSIONAL ENGINEER
3/20/2026

DATE PREPARED
09/28/2025

ROUTE	STATE
I-270	MO
DISTRICT	SHEET NO.
SL	91

COUNTY
ST. LOUIS

JOB NO.
J6I3020D

CONTRACT ID.

PROJECT NO.

BRIDGE NO.

DESCRIPTION

DATE

IF A SEAL IS PRESENT ON THIS SHEET IT HAS BEEN ELECTRONICALLY SEALED AND DATED.

MISSOURI HIGHWAYS AND TRANSPORTATION COMMISSION
MoDOT
105 WEST CAPITOL
JEFFERSON CITY, MO 65102
1-888-ASK-MODOT (1-888-275-6636)

HNTB
715 KIRK DRIVE
KANSAS CITY, MO 64105
(816) 472-1201

REV:

J6I3020D_BlockSplice_v3.vsdx

09/28/2025

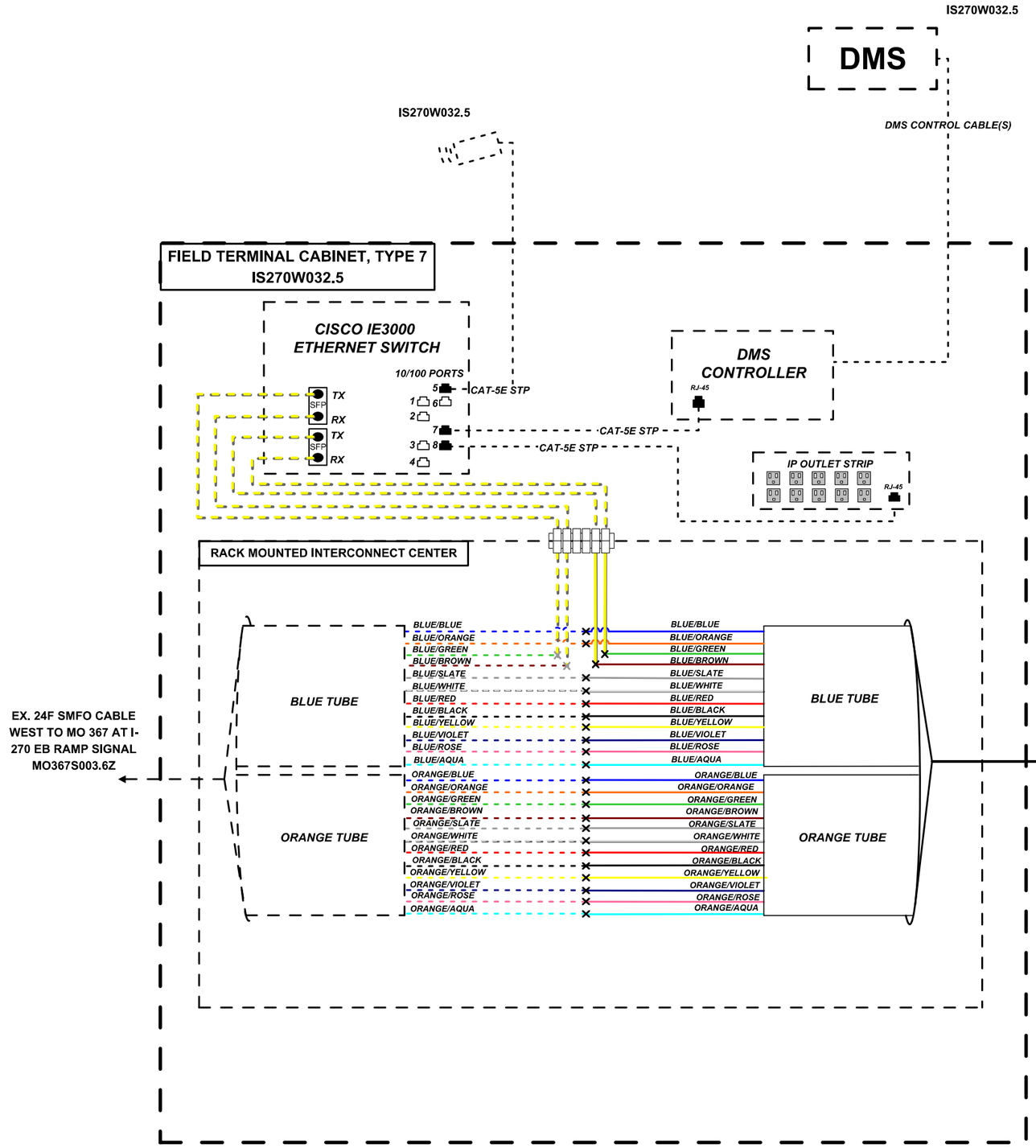

KEY

IS170N123.4	DEVICE IDENTIFIER
CCTV	CCTV CAMERA
CCTV	EXISTING CCTV CAMERA
DMS	DYNAMIC MESSAGE SIGN
	RADAR DETECTION UNIT
	SM PATCH THROUGH FIBER OPTIC JUMPER
	SM EQUIPMENT CONNECTION FIBER OPTIC JUMPER
	SM FIBER OPTIC PIGTAIL
	MM PATCH THROUGH FIBER OPTIC JUMPER
	MM EQUIPMENT CONNECTION FIBER OPTIC JUMPER
	MM FIBER OPTIC PIGTAIL
	BARE FIBER LEFT COILED IN SPLICE TRAY
× ×	EXISTING/PROPOSED FUSION SPLICE
	PATCH PANEL MODULE
	WIRELESS LINK
VDS AP	SENSYS DETECTION SYSTEM

1. MAXIMUM SPLICE LOSS SHALL BE 0.1 dB
2. NO INTERMEDIATE SPLICES ALLOWED
3. ALL SPLICES SHALL BE FUSION SPLICES
4. DASHED LINES INDICATE EXISTING EQUIPMENT OR CABLING.

STATE OF MISSOURI
CHARLES A. MILLER
NUMBER E-2002006606
REGISTERED PROFESSIONAL ENGINEER
3/20/2026

DATE PREPARED 02/11/2026
ROUTE I-270 | STATE MO
DISTRICT SL | SHEET NO. 92
COUNTY ST. LOUIS
JOB NO. J6I3020D
CONTRACT ID.
PROJECT NO.
BRIDGE NO.

DESCRIPTION | DATE

IF A SEAL IS PRESENT ON THIS SHEET IT HAS BEEN ELECTRONICALLY SEALED AND DATED.

MISSOURI HIGHWAYS AND TRANSPORTATION COMMISSION
105 WEST CAPITOL
JEFFERSON CITY, MO 65102
1-888-ASK-MODOT (1-888-275-6636)

HNTB
715 KIRK DRIVE
KANSAS CITY, MO 64105
(816) 472-1201

FIBER SPLICING & BLOCK DIAGRAM
I-270 WEST OF BELLEFONTAINE RD
IS270W032.5

SHEET 2 OF 10

REV.

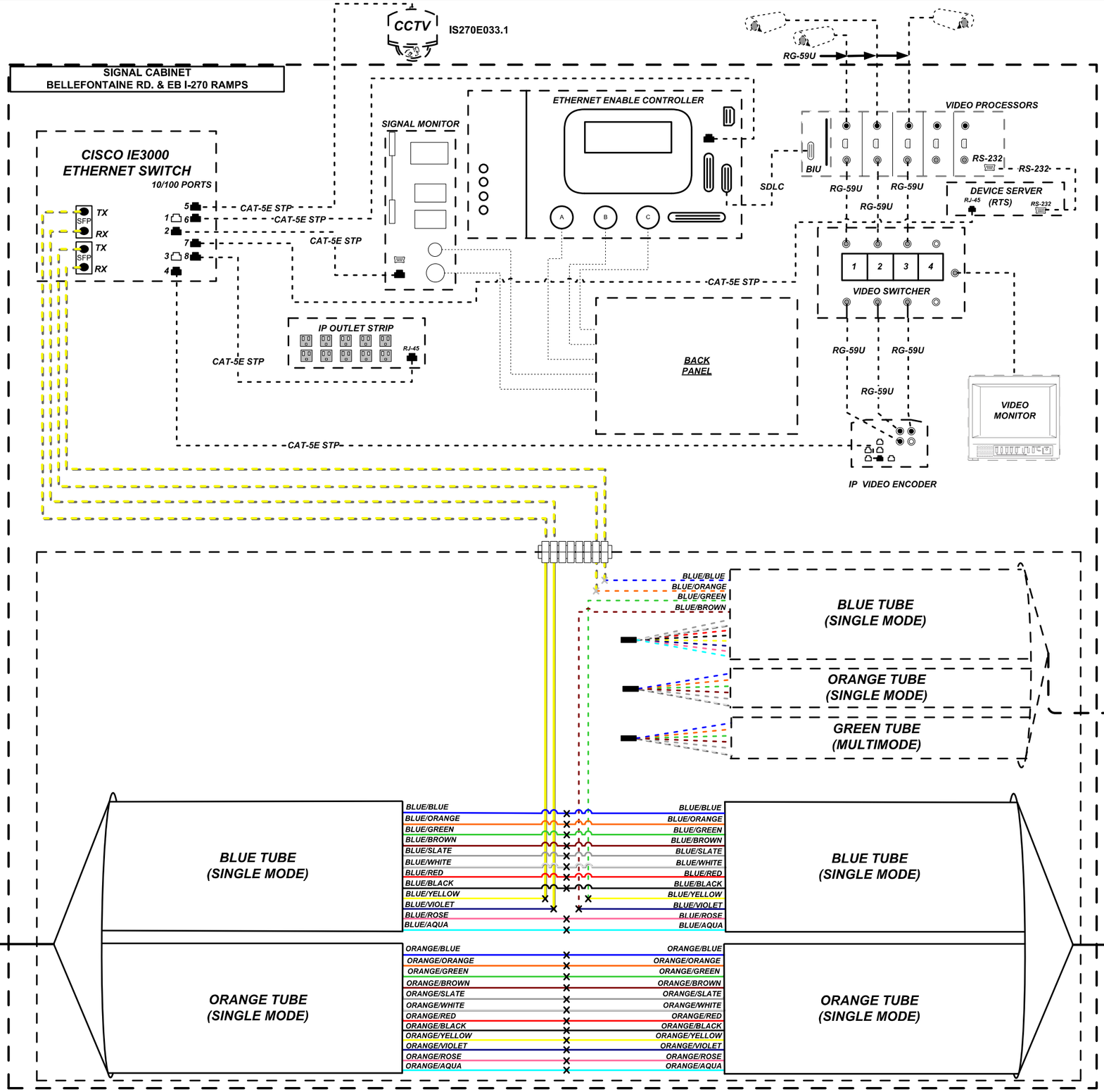

KEY

IS170N123.4	DEVICE IDENTIFIER
CCTV	CCTV CAMERA
CCTV	EXISTING CCTV CAMERA
DMS	DYNAMIC MESSAGE SIGN
	RADAR DETECTION UNIT
	SM PATCH THROUGH FIBER OPTIC JUMPER
	SM EQUIPMENT CONNECTION FIBER OPTIC JUMPER
	SM FIBER OPTIC PIGTAIL
	MM PATCH THROUGH FIBER OPTIC JUMPER
	MM EQUIPMENT CONNECTION FIBER OPTIC JUMPER
	MM FIBER OPTIC PIGTAIL
	BARE FIBER LEFT COILED IN SPLICE TRAY
× ×	EXISTING/PROPOSED FUSION SPLICE
	PATCH PANEL MODULE
	WIRELESS LINK
VDS AP	SENSYS DETECTION SYSTEM

1. MAXIMUM SPLICE LOSS SHALL BE 0.1 dB
2. NO INTERMEDIATE SPLICES ALLOWED
3. ALL SPLICES SHALL BE FUSION SPLICES
4. DASHED LINES INDICATE EXISTING EQUIPMENT OR CABLING.

FIBER SPLICING & BLOCK DIAGRAM
IS270E033.1
I-270 AT BELLEFONTAINE RD EB RAMP

SHEET 3 OF 10

STATE OF MISSOURI
CHARLES A. MILLER
NUMBER E-2002006606
REGISTERED PROFESSIONAL ENGINEER
3/20/2026

DATE PREPARED: 02/11/2026
ROUTE: I-270 | STATE: MO
DISTRICT: SL | SHEET NO.: 93
COUNTY: ST. LOUIS
JOB NO.: J6I3020D
CONTRACT ID.:
PROJECT NO.:
BRIDGE NO.:

DESCRIPTION | DATE | REV.

IF A SEAL IS PRESENT ON THIS SHEET IT HAS BEEN ELECTRONICALLY SEALED AND DATED.

MISSOURI HIGHWAYS AND TRANSPORTATION COMMISSION
105 WEST CAPITOL
JEFFERSON CITY, MO 65102
1-888-ASK-MODOT (1-888-275-6636)

HNTB
715 KIRK DRIVE
KANSAS CITY, MO 64105
(816) 472-1201

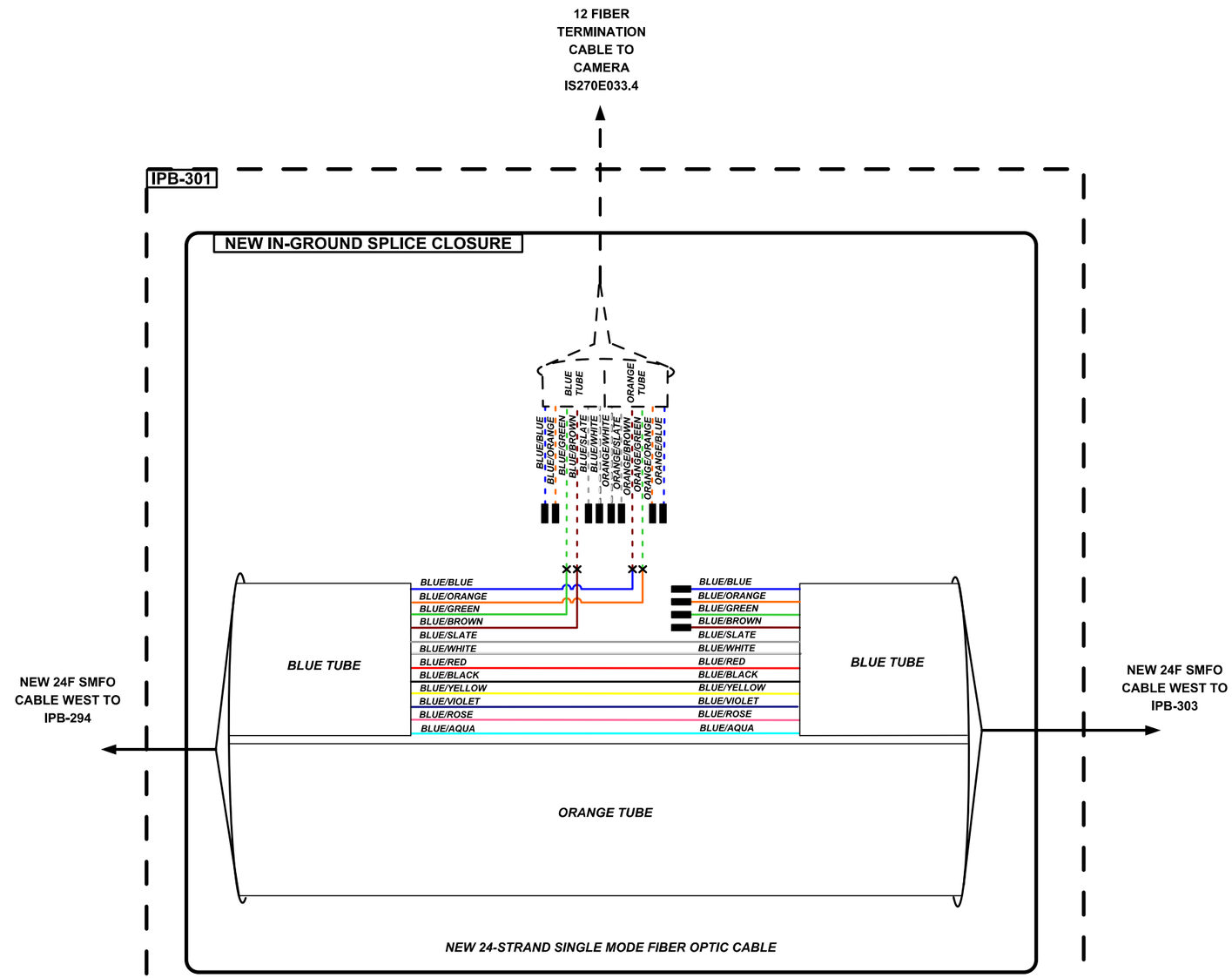

KEY

IS170N123.4	DEVICE IDENTIFIER
CCTV	CCTV CAMERA
CCTV	EXISTING CCTV CAMERA
DMS	DYNAMIC MESSAGE SIGN
	RADAR DETECTION UNIT
	SM PATCH THROUGH FIBER OPTIC JUMPER
	SM EQUIPMENT CONNECTION FIBER OPTIC JUMPER
	SM FIBER OPTIC PIGTAIL
	MM PATCH THROUGH FIBER OPTIC JUMPER
	MM EQUIPMENT CONNECTION FIBER OPTIC JUMPER
	MM FIBER OPTIC PIGTAIL
	BARE FIBER LEFT COILED IN SPLICE TRAY
× ×	EXISTING/PROPOSED FUSION SPLICE
	PATCH PANEL MODULE
	WIRELESS LINK
VDS AP	SENSYS DETECTION SYSTEM

1. MAXIMUM SPLICE LOSS SHALL BE 0.1 dB
2. NO INTERMEDIATE SPLICES ALLOWED
3. ALL SPLICES SHALL BE FUSION SPLICES
4. DASHED LINES INDICATE EXISTING EQUIPMENT OR CABLING.

FIBER SPLICING & BLOCK DIAGRAM
SPLICE VAULT
WB I-270 WEST OF LILAC AVE
IPB-301

SHEET 4 OF 10

STATE OF MISSOURI
CHARLES A. MILLER
NUMBER E-2002006606
REGISTERED PROFESSIONAL ENGINEER
3/20/2026

DATE PREPARED: 02/11/2026
ROUTE: I-270 | STATE: MO
DISTRICT: SL | SHEET NO.: 94
COUNTY: ST. LOUIS
JOB NO.: J6I3020D
CONTRACT ID.:
PROJECT NO.:
BRIDGE NO.:

DESCRIPTION | DATE | REV.

IF A SEAL IS PRESENT ON THIS SHEET IT HAS BEEN ELECTRONICALLY SEALED AND DATED.

MISSOURI HIGHWAYS AND TRANSPORTATION COMMISSION
105 WEST CAPITOL
JEFFERSON CITY, MO 65102
1-888-ASK-MODOT (1-888-275-6636)

HNTB
715 KIRK DRIVE
KANSAS CITY, MO 64105
(816) 472-1201

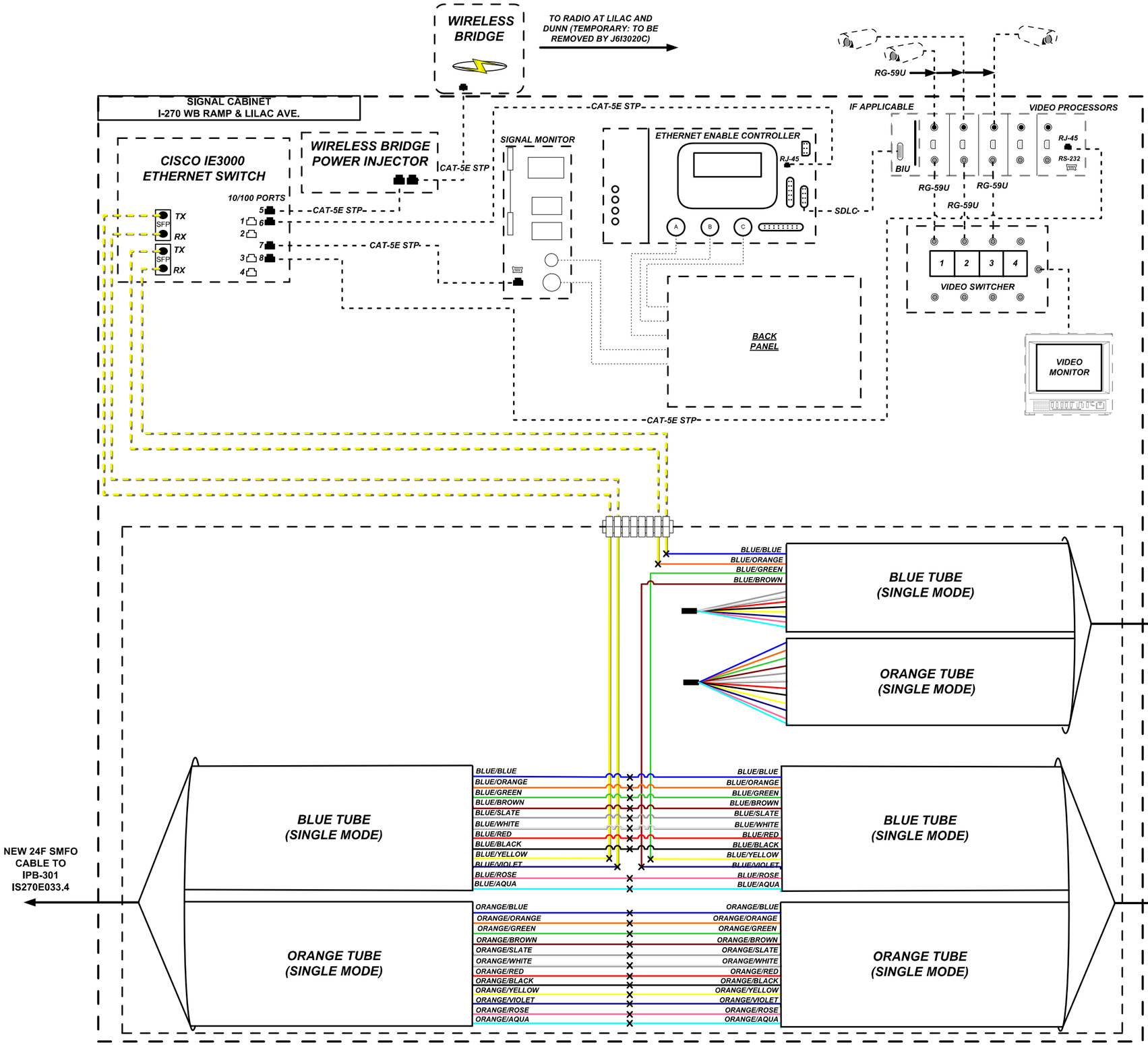

KEY

IS170N123.4	DEVICE IDENTIFIER
CCTV	CCTV CAMERA
CCTV (EX)	EXISTING CCTV CAMERA
DMS	DYNAMIC MESSAGE SIGN
	RADAR DETECTION UNIT
	SM PATCH THROUGH FIBER OPTIC JUMPER
	SM EQUIPMENT CONNECTION FIBER OPTIC JUMPER
	SM FIBER OPTIC PIGTAIL
	MM PATCH THROUGH FIBER OPTIC JUMPER
	MM EQUIPMENT CONNECTION FIBER OPTIC JUMPER
	MM FIBER OPTIC PIGTAIL
	BARE FIBER LEFT COILED IN SPLICE TRAY
	EXISTING/PROPOSED FUSION SPLICE
	PATCH PANEL MODULE
	WIRELESS LINK
VDS AP	SENSYS DETECTION SYSTEM

1. MAXIMUM SPLICE LOSS SHALL BE 0.1 dB
2. NO INTERMEDIATE SPLICES ALLOWED
3. ALL SPLICES SHALL BE FUSION SPLICES
4. DASHED LINES INDICATE EXISTING EQUIPMENT OR CABLING.

FIBER SPLICING & BLOCK DIAGRAM
IS270W034.1
I-270 AT LILAC WB RAMP
INTERIM PHASE
SHEET 5 OF 10

STATE OF MISSOURI
CHARLES A. MILLER
NUMBER E-2002006606
REGISTERED PROFESSIONAL ENGINEER
3/20/2026

DATE PREPARED: 02/11/2026
ROUTE: I-270 | STATE: MO
DISTRICT: SL | SHEET NO.: 95
COUNTY: ST. LOUIS
JOB NO.: J6I3020D
CONTRACT ID.:
PROJECT NO.:
BRIDGE NO.:

DESCRIPTION | DATE

IF A SEAL IS PRESENT ON THIS SHEET IT HAS BEEN ELECTRONICALLY SEALED AND DATED.

MISSOURI HIGHWAYS AND TRANSPORTATION COMMISSION
105 WEST CAPITOL
JEFFERSON CITY, MO 65102
1-888-ASK-MODOT (1-888-275-6636)

HNTB
715 KIRK DRIVE
KANSAS CITY, MO 64105
(816) 472-1201

REV.

IS270E034.1

CCTV

SIGNAL CABINET
I-270 EB RAMP & LILAC AVE.

CISCO IE3000
ETHERNET SWITCH

10/100 PORTS

SFP TX
SFP RX
SFP TX
SFP RX

CAT-5E STP

SIGNAL MONITOR

ETHERNET ENABLE CONTROLLER

RJ-45

SDLC

A B C

RG-59U

IF APPLICABLE

VIDEO PROCESSORS

BIU

RJ-45
RS-232

RG-59U
RG-59U
RG-59U

1 2 3 4
VIDEO SWITCHER

VIDEO MONITOR

BACK PANEL

IP OUTLET STRIP
RJ-45

DEVICE SERVER
RJ-45
RS-232

RS-232

MULTIMODE FIBER OPTIC DATA MODEM

WALL-MOUNTED INTERCONNECT CENTER

NEW 24F SMFO CABLE TO I-270 WB RAMP & LILAC AVE IS270W034.1

BLUE TUBE (SINGLE MODE)

BLUE/BLUE
BLUE/ORANGE
BLUE/GREEN
BLUE/BROWN
BLUE/SLATE
BLUE/WHITE
BLUE/RED
BLUE/BLACK
BLUE/YELLOW
BLUE/VIOLET
BLUE/ROSE
BLUE/AQUA

ORANGE TUBE (SINGLE MODE)

ORANGE/BLUE
ORANGE/ORANGE
ORANGE/GREEN
ORANGE/BROWN
ORANGE/SLATE
ORANGE/WHITE
ORANGE/RED
ORANGE/BLACK
ORANGE/YELLOW
ORANGE/VIOLET
ORANGE/ROSE
ORANGE/AQUA

BLUE/BLUE
BLUE/ORANGE
BLUE/GREEN
BLUE/BROWN
BLUE/SLATE
BLUE/WHITE

BLUE TUBE (MM)

EX. 6F MM CABLE SOUTH ALONG LILAC AVE. TO COUNTY SIGNAL

KEY

IS170N123.4	DEVICE IDENTIFIER
CCTV	CCTV CAMERA
CCTV (EX)	EXISTING CCTV CAMERA
DMS	DYNAMIC MESSAGE SIGN
	RADAR DETECTION UNIT
	SM PATCH THROUGH FIBER OPTIC JUMPER
	SM EQUIPMENT CONNECTION FIBER OPTIC JUMPER
	SM FIBER OPTIC PIGTAIL
	MM PATCH THROUGH FIBER OPTIC JUMPER
	MM EQUIPMENT CONNECTION FIBER OPTIC JUMPER
	MM FIBER OPTIC PIGTAIL
	BARE FIBER LEFT COILED IN SPLICE TRAY
× ×	EXISTING/PROPOSED FUSION SPLICE
	PATCH PANEL MODULE
	WIRELESS LINK
VDS AP	SENSYS DETECTION SYSTEM

1. MAXIMUM SPLICE LOSS SHALL BE 0.1 dB
2. NO INTERMEDIATE SPLICES ALLOWED
3. ALL SPLICES SHALL BE FUSION SPLICES
4. DASHED LINES INDICATE EXISTING EQUIPMENT OR CABLING.

FIBER SPLICING & BLOCK DIAGRAM
IS270E034.1
I-270 AT LILAC EB RAMP
INTERIM PHASE
SHEET 6 OF 10

STATE OF MISSOURI
CHARLES A. MILLER
NUMBER E-2002006606
REGISTERED PROFESSIONAL ENGINEER
3/20/2026

DATE PREPARED 02/11/2026
ROUTE I-270 | STATE MO
DISTRICT SL | SHEET NO. 96
COUNTY ST. LOUIS
JOB NO. J6I3020D
CONTRACT ID.
PROJECT NO.
BRIDGE NO.

DESCRIPTION | DATE | REV.

IF A SEAL IS PRESENT ON THIS SHEET IT HAS BEEN ELECTRONICALLY SEALED AND DATED.

MISSOURI HIGHWAYS AND TRANSPORTATION COMMISSION
105 WEST CAPITOL
JEFFERSON CITY, MO 65102
1-888-ASK-MODOT (1-888-275-6636)

HNTB
715 KIRK DRIVE
KANSAS CITY, MO 64105
(816) 472-1201

J6I3020D_BlockSplice_v3.vsdx
02/11/2026

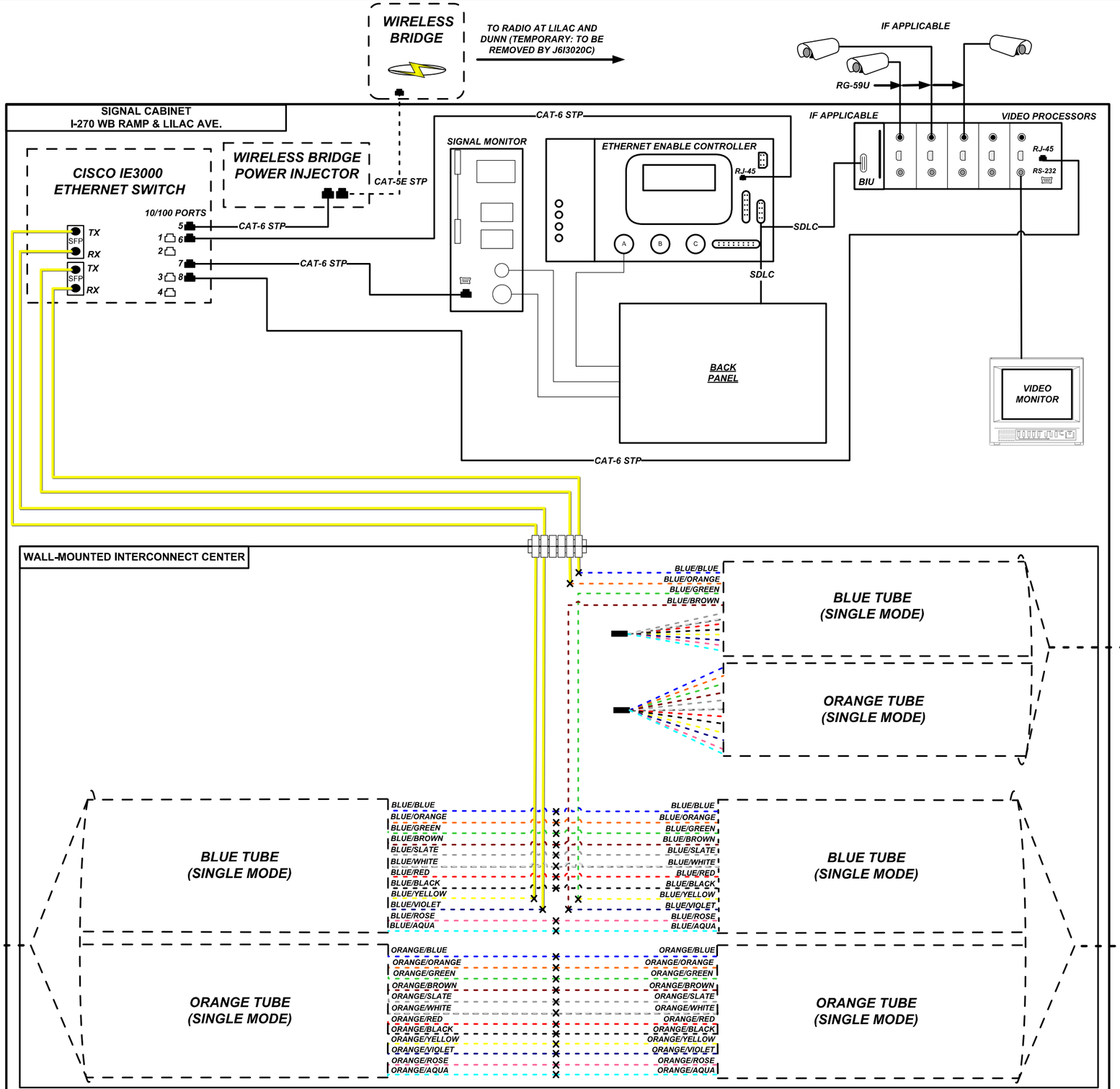

KEY

IS170N123.4	DEVICE IDENTIFIER
CCTV	CCTV CAMERA
CCTV (EX)	EXISTING CCTV CAMERA
DMS	DYNAMIC MESSAGE SIGN
	RADAR DETECTION UNIT
	SM PATCH THROUGH FIBER OPTIC JUMPER
	SM EQUIPMENT CONNECTION FIBER OPTIC JUMPER
	SM FIBER OPTIC PIGTAIL
	MM PATCH THROUGH FIBER OPTIC JUMPER
	MM EQUIPMENT CONNECTION FIBER OPTIC JUMPER
	MM FIBER OPTIC PIGTAIL
	BARE FIBER LEFT COILED IN SPLICE TRAY
	EXISTING/PROPOSED FUSION SPLICE
	PATCH PANEL MODULE
	WIRELESS LINK
VDS AP	SENSYS DETECTION SYSTEM

1. MAXIMUM SPLICE LOSS SHALL BE 0.1 dB
2. NO INTERMEDIATE SPLICES ALLOWED
3. ALL SPLICES SHALL BE FUSION SPLICES
4. DASHED LINES INDICATE EXISTING EQUIPMENT OR CABLING.

FIBER SPLICING & BLOCK DIAGRAM
IS270W034.1
I-270 AT LILAC WB RAMP
FINAL PHASE
SHEET 7 OF 10

STATE OF MISSOURI
CHARLES A. MILLER
NUMBER E-2002000606
REGISTERED PROFESSIONAL ENGINEER
3/20/2026

DATE PREPARED 02/11/2026
ROUTE I-270 | STATE MO
DISTRICT SL | SHEET NO. 97
COUNTY ST. LOUIS
JOB NO. J6I3020D
CONTRACT ID.
PROJECT NO.
BRIDGE NO.

DESCRIPTION | DATE | REV.

IF A SEAL IS PRESENT ON THIS SHEET IT HAS BEEN ELECTRONICALLY SEALED AND DATED.

MISSOURI HIGHWAYS AND TRANSPORTATION COMMISSION
105 WEST CAPITOL
JEFFERSON CITY, MO 65102
1-888-ASK-MODOT (1-888-275-6636)

HNTB
715 KIRK DRIVE
KANSAS CITY, MO 64105
(816) 472-1201

J6I3020D_BlockSplice_v3.vsdx 02/11/2026

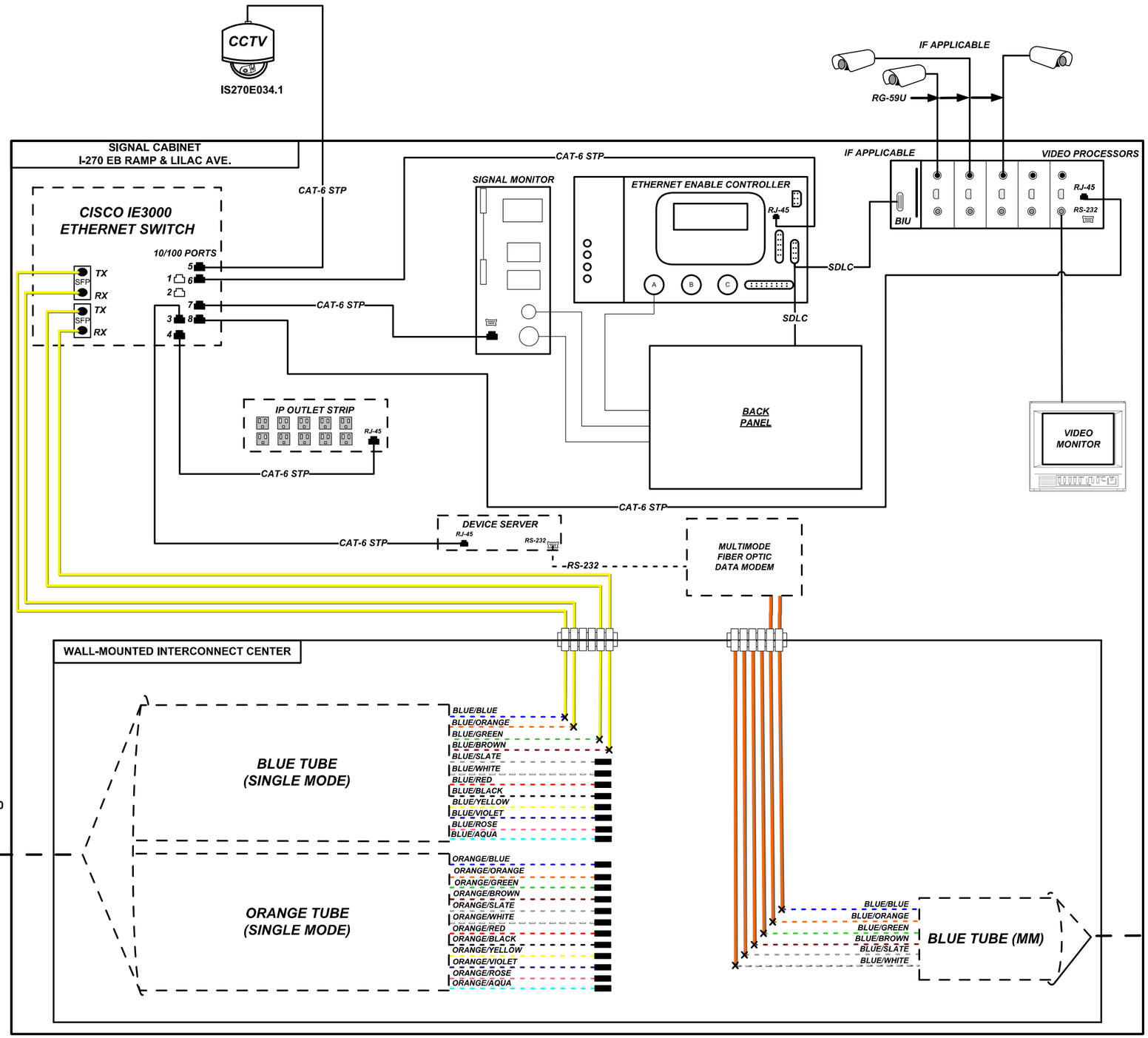

KEY

IS170N123.4	DEVICE IDENTIFIER
CCTV	CCTV CAMERA
CCTV	EXISTING CCTV CAMERA
DMS	DYNAMIC MESSAGE SIGN
	RADAR DETECTION UNIT
	SM PATCH THROUGH FIBER OPTIC JUMPER
	SM EQUIPMENT CONNECTION FIBER OPTIC JUMPER
	SM FIBER OPTIC PIGTAIL
	MM PATCH THROUGH FIBER OPTIC JUMPER
	MM EQUIPMENT CONNECTION FIBER OPTIC JUMPER
	MM FIBER OPTIC PIGTAIL
	BARE FIBER LEFT COILED IN SPLICE TRAY
× ×	EXISTING/PROPOSED FUSION SPLICE
	PATCH PANEL MODULE
	WIRELESS LINK
VDS AP	SENSYS DETECTION SYSTEM

1. MAXIMUM SPLICE LOSS SHALL BE 0.1 dB
2. NO INTERMEDIATE SPLICES ALLOWED
3. ALL SPLICES SHALL BE FUSION SPLICES
4. DASHED LINES INDICATE EXISTING EQUIPMENT OR CABLING.

FIBER SPLICING & BLOCK DIAGRAM
IS270E034.1
I-270 AT LILAC EB RAMP
FINAL PHASE
SHEET 8 OF 10

STATE OF MISSOURI
CHARLES A. MILLER
NUMBER E-2002006606
REGISTERED PROFESSIONAL ENGINEER
3/20/2026

DATE PREPARED 02/11/2026
ROUTE I-270 | STATE MO
DISTRICT SL | SHEET NO. 98
COUNTY ST. LOUIS
JOB NO. J6I3020D
CONTRACT ID.
PROJECT NO.
BRIDGE NO.

DESCRIPTION	DATE

IF A SEAL IS PRESENT ON THIS SHEET IT HAS BEEN ELECTRONICALLY SEALED AND DATED.

MISSOURI HIGHWAYS AND TRANSPORTATION COMMISSION
105 WEST CAPITOL
JEFFERSON CITY, MO 65102
1-888-ASK-MODOT (1-888-275-6636)

HNTB
715 KIRK DRIVE
KANSAS CITY, MO 64105
(816) 472-1201

REV.

J6I3020D_BlockSplice_v3.vsdx 02/11/2026

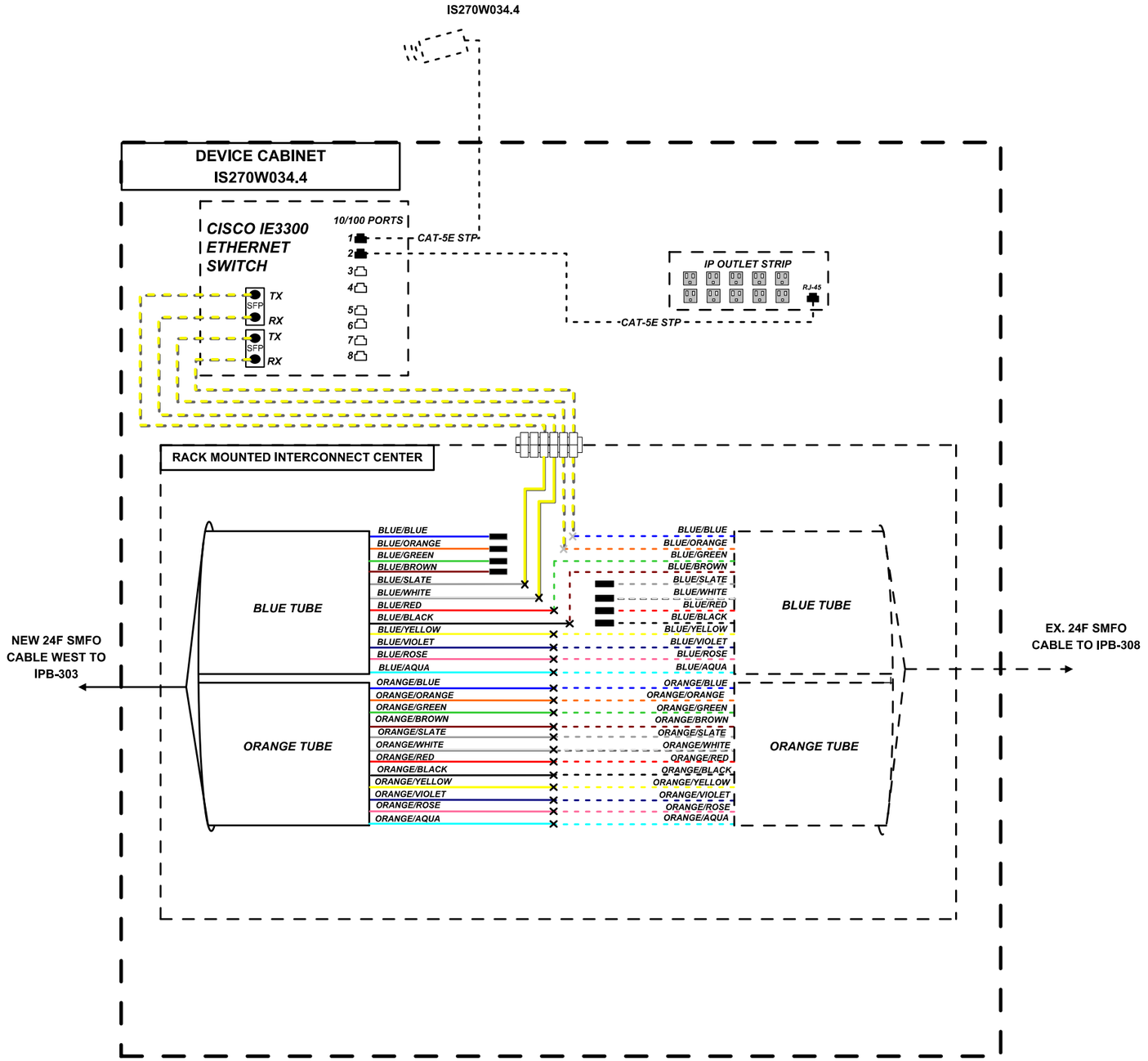

KEY

IS170N123.4	DEVICE IDENTIFIER
CCTV	CCTV CAMERA
CCTV (EX)	EXISTING CCTV CAMERA
DMS	DYNAMIC MESSAGE SIGN
	RADAR DETECTION UNIT
	SM PATCH THROUGH FIBER OPTIC JUMPER
	SM EQUIPMENT CONNECTION FIBER OPTIC JUMPER
	SM FIBER OPTIC PIGTAIL
	MM PATCH THROUGH FIBER OPTIC JUMPER
	MM EQUIPMENT CONNECTION FIBER OPTIC JUMPER
	MM FIBER OPTIC PIGTAIL
	BARE FIBER LEFT COILED IN SPLICE TRAY
× ×	EXISTING/PROPOSED FUSION SPLICE
	PATCH PANEL MODULE
	WIRELESS LINK
VDS AP	SENSYS DETECTION SYSTEM

1. MAXIMUM SPLICE LOSS SHALL BE 0.1 dB
2. NO INTERMEDIATE SPLICES ALLOWED
3. ALL SPLICES SHALL BE FUSION SPLICES
4. DASHED LINES INDICATE EXISTING EQUIPMENT OR CABLING.

FIBER SPLICING & BLOCK DIAGRAM
IS270W034.4
DETECTOR CABINET WEST OF RIVERVIEW

SHEET 9 OF 10

STATE OF MISSOURI
CHARLES A. MILLER
NUMBER E-2002006606
REGISTERED PROFESSIONAL ENGINEER
3/20/2026

IF A SEAL IS PRESENT ON THIS SHEET IT HAS BEEN ELECTRONICALLY SEALED AND DATED.

DATE PREPARED	02/11/2026
ROUTE	I-270
STATE	MO
DISTRICT	SL
SHEET NO.	99
COUNTY	ST. LOUIS
JOB NO.	J6I3020D
CONTRACT ID.	
PROJECT NO.	
BRIDGE NO.	

DESCRIPTION | DATE

MISSOURI HIGHWAYS AND TRANSPORTATION COMMISSION
105 WEST CAPITOL
JEFFERSON CITY, MO 65102
1-888-ASK-MODOT (1-888-275-6636)

HNTB
715 KIRK DRIVE
KANSAS CITY, MO 64105
(816) 472-1201

REV.

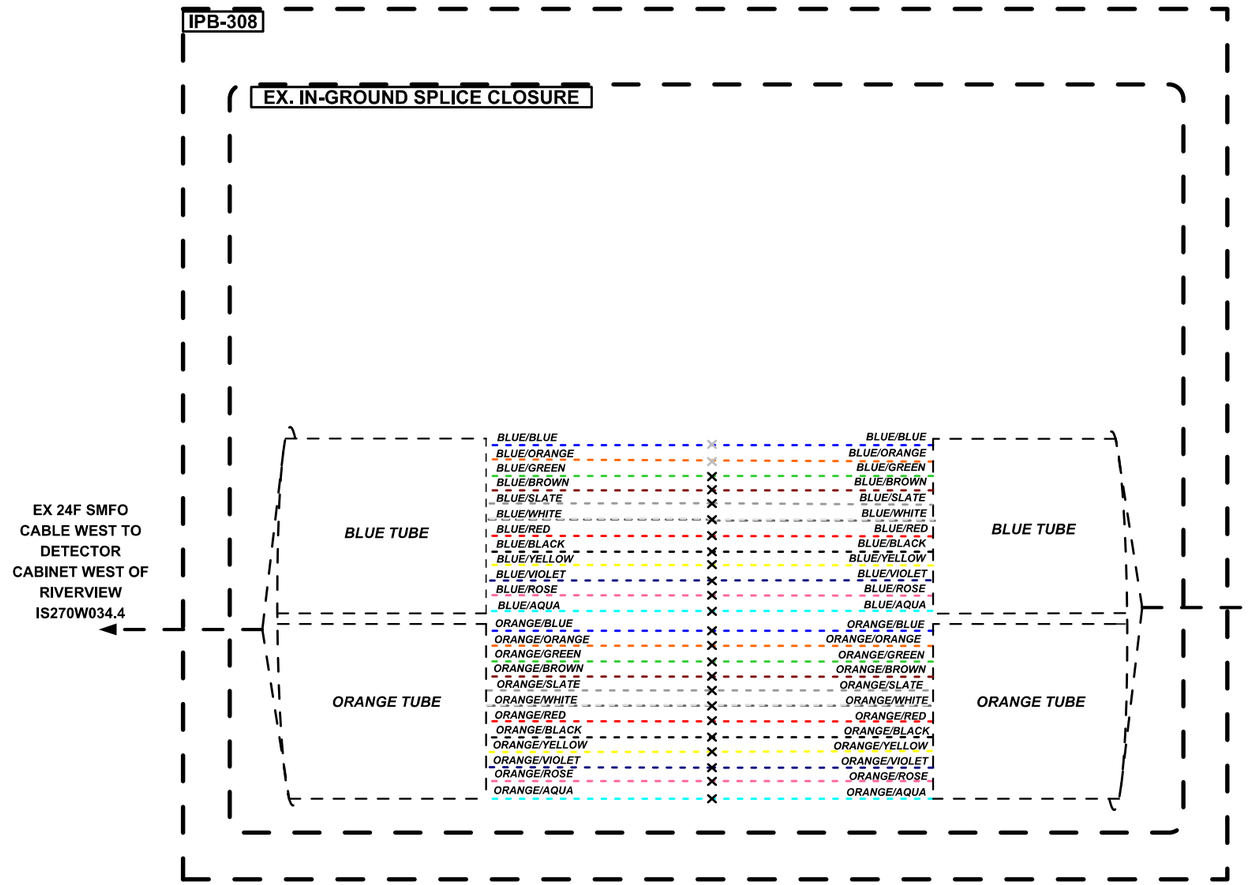

KEY

IS170N123.4	DEVICE IDENTIFIER
CCTV	CCTV CAMERA
CCTV (EX)	EXISTING CCTV CAMERA
DMS	DYNAMIC MESSAGE SIGN
	RADAR DETECTION UNIT
	SM PATCH THROUGH FIBER OPTIC JUMPER
	SM EQUIPMENT CONNECTION FIBER OPTIC JUMPER
	SM FIBER OPTIC PIGTAIL
	MM PATCH THROUGH FIBER OPTIC JUMPER
	MM EQUIPMENT CONNECTION FIBER OPTIC JUMPER
	MM FIBER OPTIC PIGTAIL
	BARE FIBER LEFT COILED IN SPLICE TRAY
	EXISTING/PROPOSED FUSION SPLICE
	PATCH PANEL MODULE
	WIRELESS LINK
VDS AP	SENSYS DETECTION SYSTEM

1. MAXIMUM SPLICE LOSS SHALL BE 0.1 dB
2. NO INTERMEDIATE SPLICES ALLOWED
3. ALL SPLICES SHALL BE FUSION SPLICES
4. DASHED LINES INDICATE EXISTING EQUIPMENT OR CABLING.

STATE OF MISSOURI
CHARLES A. MILLER
NUMBER E-2002006606
REGISTERED PROFESSIONAL ENGINEER
3/20/2026

DATE PREPARED: 02/11/2026
ROUTE: I-270 | STATE: MO
DISTRICT: SL | SHEET NO.: 100
COUNTY: ST. LOUIS
JOB NO.: J6I3020D
CONTRACT ID.:
PROJECT NO.:
BRIDGE NO.:

DESCRIPTION | DATE

IF A SEAL IS PRESENT ON THIS SHEET IT HAS BEEN ELECTRONICALLY SEALED AND DATED.

MISSOURI HIGHWAYS AND TRANSPORTATION COMMISSION
105 WEST CAPITOL
JEFFERSON CITY, MO 65102
1-888-ASK-MODOT (1-888-275-6636)

HNTB
715 KIRK DRIVE
KANSAS CITY, MO 64105
(816) 472-1201

FIBER SPLICING & BLOCK DIAGRAM SPLICE VAULT I-270 W. OF RIVERVIEW DR IPB-308

SHEET 10 OF 10

REV.

GENERAL NOTES:

1. SPLICING OF CONDUCTORS SHALL BE IN POLE BASES, JUNCTION BOXES, OR PULL BOXES ONLY.

2. LEVELING NUTS SHALL BE INSTALLED FOR PLUMBING THE POLE. ALL POLES SHALL BE ERECTED PLUMB.

3. LIGHTING CIRCUITS SHALL BE WIRED IN ACCORDANCE WITH THE PLANS. DEVIATIONS SHALL NOT BE PERMITTED WITHOUT PRIOR APPROVAL OF THE ENGINEER.

4. TRENCHED CABLE RUNS SHALL NOT BE IN A STRAIGHT LINE BETWEEN TERMINAL POINTS WHERE FEASIBLE. TO PREVENT EROSION OF EMBANKMENTS INVOLVING HIGH FILLS AND STEEP SIDE SLOPES, THE CONTRACTOR SHALL NOT TRENCH DIRECTLY FROM POLE TO POLE, RATHER, AS DIRECTED BY THE ENGINEER. THE TRENCH SHALL EXTEND FROM THE POLE STRAIGHT DOWN THE SIDE SLOPE RUN ALONG THE TOE OF THE SLOPE, AND THEN STRAIGHT UP THE SIDE SLOPE TO THE NEXT POLE. THE CONTRACTOR WILL BE COMPENSATED FOR THIS ADDITIONAL UNIT DUCT AT ITS AGREED CONTRACT PRICE.

5. ALL CONDUIT TO BE PUSHED UNDER EXISTING PAVEMENT OR TRENCHED UNDER PROPOSED PAVEMENT SHALL BE INSTALLED AT A MINIMUM DEPTH OF 3'-6" TO AVOID CONFLICTS WITH EXISTING OR PROPOSED UNDER DRAIN. THE COST OF INSTALLING THE CONDUIT AT THIS NEW DEPTH SHALL BE INCIDENTAL TO THE CONDUIT.

6. ALL NEW CABLE-CONDUIT AND UNDERGROUND CONDUIT SHALL BE PLACED A MINIMUM OF 2'-6" BELOW THE FLOWLINE OF EXISTING DITCHES AND A MINIMUM OF 2'-0" BENEATH THE GROUND SURFACE AT OTHER LOCATIONS.

7. UNDERGROUND FACILITIES, STRUCTURES, AND UTILITIES HAVE BEEN PLOTTED FROM AVAILABLE SURVEYS AND RECORDS. THE COMMISSION DOES NOT WARRANT THE LOCATIONS OF THESE FACILITIES AS PRECISE. IT IS POSSIBLE THERE MAY BE OTHERS.THE EXISTENCE OF WHICH IS PRESENTLY NOT KNOWN OR SHOWN. IT IS THE CONTRACTOR'S RESPONSIBILITY TO DETERMINE THE EXISTENCE AND PRECISE LOCATION OF ALL FACILITIES AND TO AVOID DAMAGE TO THEM. SEE THE JOB SPECIAL PROVISIONS FOR A LIST OF UTILITY COMPANIES ON OR WITHIN THE VICINITY OF THE PROJECT LIMITS.

8. ANY WORK INDICATED ON THE PLANS THAT EXTENDS BEYOND THE PROJECT LIMITS IS CONSIDERED INCIDENTAL TO AND PART OF THE CONSTRUCTION OF THIS PROJECT.

9. NO DIRECT PAYMENT FOR CLEARING AND GRUBBING.

10. CONTRACTOR TO FIELD VERIFY WITH MODOT STAFF EXISTING LIGHTING CONDUIT PATHWAYS AND CIRCUITS TO BEGINNING REMOVALS. CONTRACTOR TO VERIFY EXISTING LUMINAIRES TO BE UTILIZED IN PLACE WILL REMAIN FED AND OPERATIONAL FOLLOWING INSTALLATION OF THE NEW LIGHTING INFRASTRUCTURE.

11. CONTRACTOR TO REMOVE ANY UNNEEDED JUNCTION BOXES EXCLUDED FROM THIS PLAN THAT WAS BEING USED FOR THE EXISTING LIGHTING CIRCUITS.

12. LIGHTING INFRASTRUCTURE INCLUDING, BUT NOT LIMITED TO, LIGHTING CONTROLLERS, JUNCTION BOXES, AND LUMINAIRES NOT DENOTED ON THE PLANS SHALL BE UTILIZED IN PLACE.

STREET LIGHTING LEGEND

- CONTROLLER, LIGHTING
- CONTROLLER, LIGHTING (EXISTING)
- P.S. POWER SERVICE POLE
- LED-B LUMINAIRE (TYPE 2)
- LED-B LUMINAIRE (TYPE 3)
- ORNAMENTAL LUMINAIRE (BRIDGE MOUNTED) SRSP2-72L-260-3K7-2-UNV-BLS-BC
- EXISTING TENON MOUNT LUMINAIRE
- EXISTING LIGHT POLE w/ ARM
- PULL BOX PREFORMED CLASS 1
- PULL BOX CONCRETE, STANDARD
- PULL BOX (EXISTING)
- POWER SUPPLY ASSEMBLY
- CONDUIT, RIGID (TRENCH)
- CONDUIT, RIGID (PUSHED)
- CONDUIT, RIGID (BRIDGE)
- CABLE-CONDUIT (EXISTING)
- CABLE-CONDUIT
- CONDUIT, RIGID (EXISTING)
- M METALLIC JB (BRIDGE MOUNTED)

STATE OF MISSOURI
JASON LEE HAYNES
NUMBER PE-2004017183
PROFESSIONAL ENGINEER
THIS SHEET HAS BEEN SIGNED, SEALED, AND DATED ELECTRONICALLY

DATE PREPARED 3/25/2026

ROUTE	STATE
I-270	MO

DISTRICT	SHEET NO.
SL	101

COUNTY: ST. LOUIS

JOB NO.: J6I3020D

CONTRACT ID.:

PROJECT NO.:

BRIDGE NO.:

DESCRIPTION	DATE

IF A SEAL IS PRESENT ON THIS SHEET IT HAS BEEN ELECTRONICALLY SEALED AND DATED.

MISSOURI HIGHWAYS AND TRANSPORTATION COMMISSION
105 WEST CAPITOL
JEFFERSON CITY, MO 65102
1-888-ASK-MODOT (1-888-275-6636)

HDR Engineering, Inc.
1001 Highlands Plaza Drive
Suite 200
St. Louis, MO 63110-1337
314-425-8300
Certificate of Authority: 000856

I-270 LIGHTING PLAN
GENERAL NOTES & LEGEND
SHEET 1 OF 1

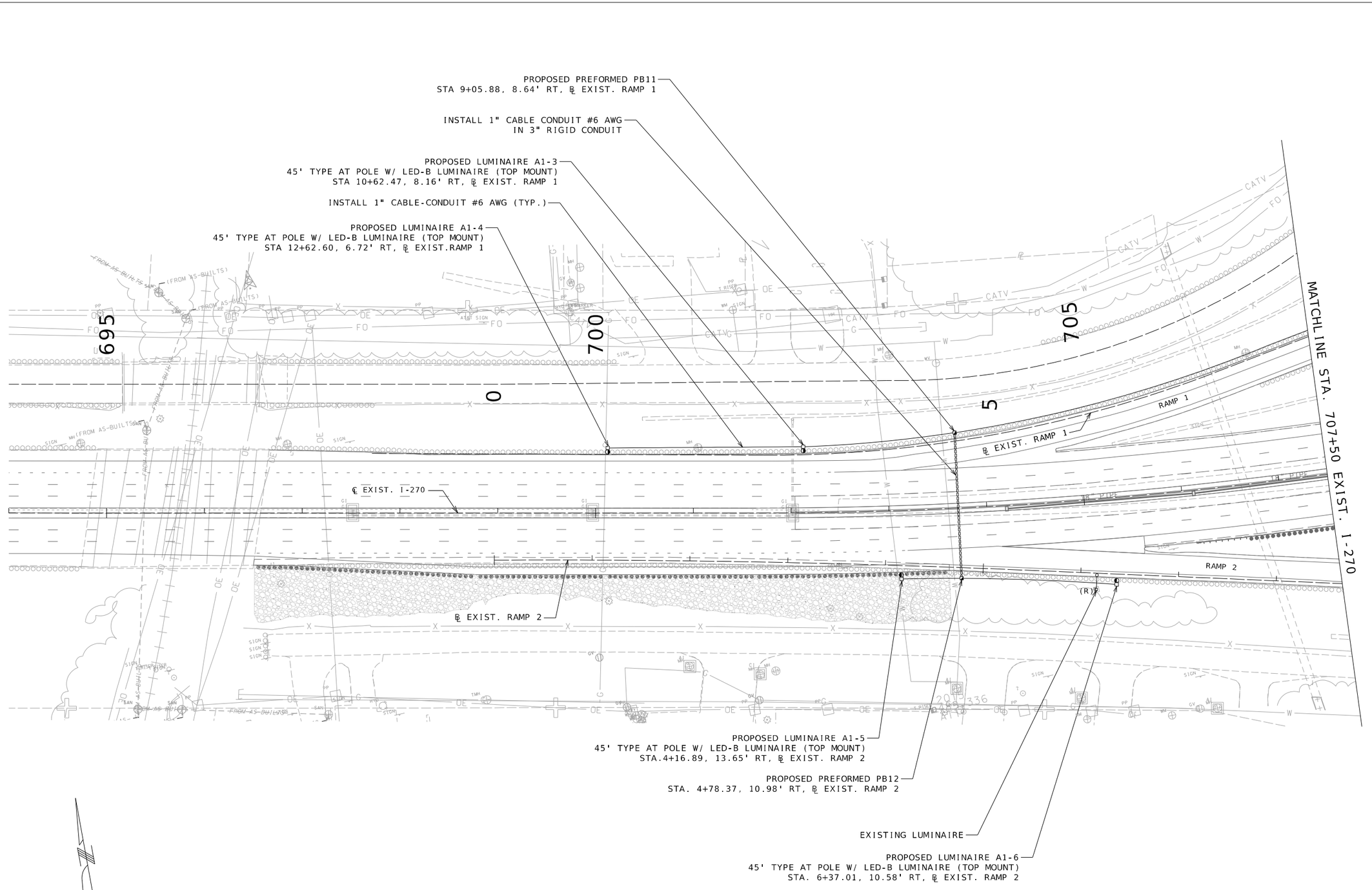

I-270 LIGHTING PLAN
STA 694+00 TO STA 707+50
SHEET 1 OF 3

STATE OF MISSOURI
JASON LEE HAYNES
NUMBER PE-2004017183
PROFESSIONAL ENGINEER
THIS SHEET HAS BEEN SIGNED, SEALED, AND DATED ELECTRONICALLY

DATE PREPARED 3/25/2026

ROUTE	STATE
I-270	MO
DISTRICT	SHEET NO.
SL	102

COUNTY: ST. LOUIS
JOB NO.: J6I3020D
CONTRACT ID.:
PROJECT NO.:
BRIDGE NO.:

IF A SEAL IS PRESENT ON THIS SHEET IT HAS BEEN ELECTRONICALLY SEALED AND DATED.

DESCRIPTION	DATE

MISSOURI HIGHWAYS AND TRANSPORTATION COMMISSION
105 WEST CAPITOL
JEFFERSON CITY, MO 65102
1-888-ASK-MODOT (1-888-275-6636)

HDR Engineering, Inc.
1001 Highlands Plaza Drive
Suite 200
St. Louis, MO 63110-1337
314-425-8300
Certificate of Authority: 000856

c:\pwworking\central01\d4169511\102_LT02_J6I3020D_I50_I-270.dgn 10:42:12 AM 3/25/2026

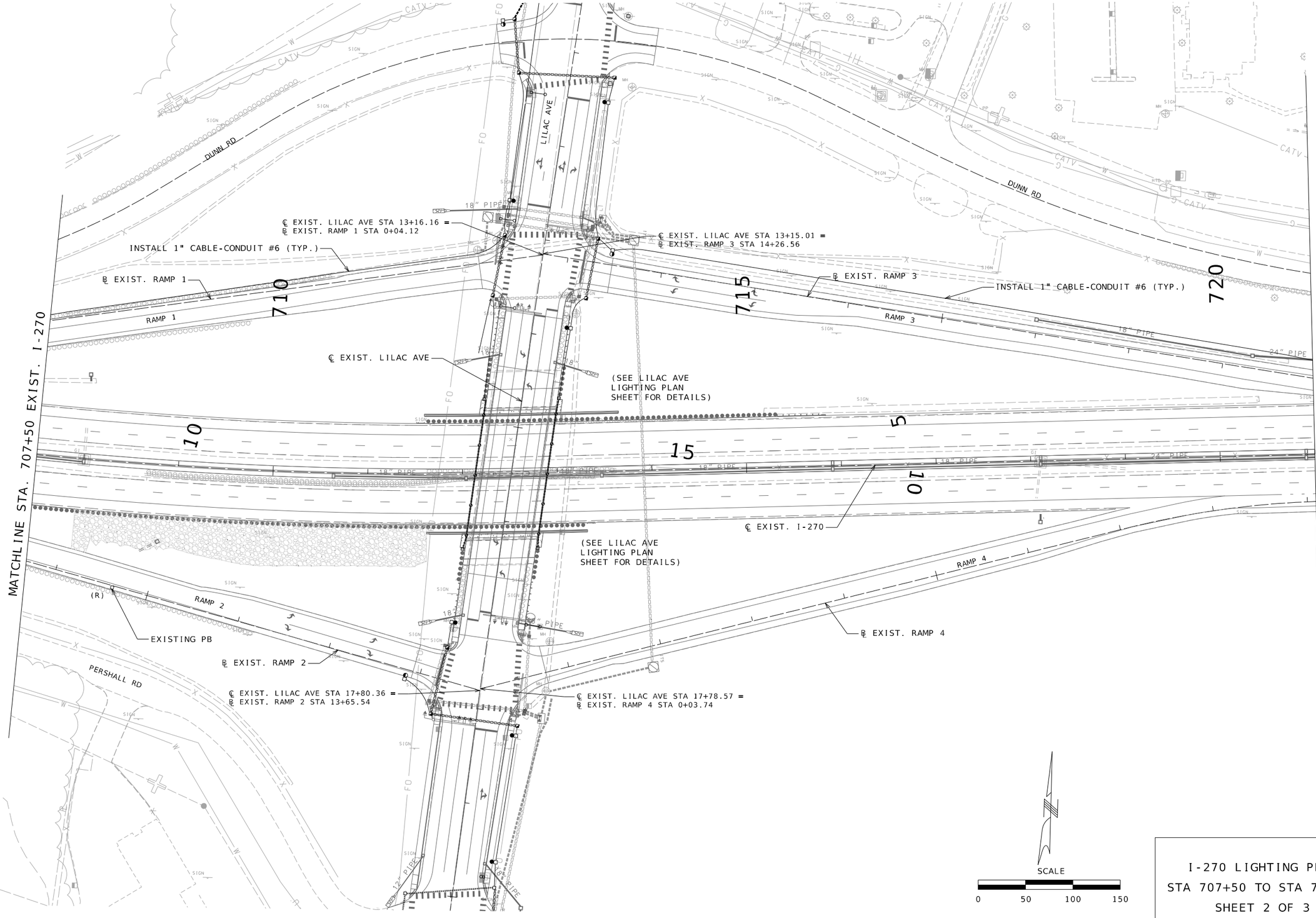

I-270 LIGHTING PLAN
STA 707+50 TO STA 721+00
SHEET 2 OF 3

STATE OF MISSOURI
JASON LEE HAYNES
NUMBER PE-2004017183
PROFESSIONAL ENGINEER
THIS SHEET HAS BEEN SIGNED, SEALED, AND DATED ELECTRONICALLY

DATE PREPARED: 3/25/2026
ROUTE: I-270 | STATE: MO
DISTRICT: SL | SHEET NO.: 103
COUNTY: ST. LOUIS
JOB NO.: J6I3020D
CONTRACT ID.:
PROJECT NO.:
BRIDGE NO.:

DESCRIPTION | DATE

IF A SEAL IS PRESENT ON THIS SHEET IT HAS BEEN ELECTRONICALLY SEALED AND DATED.

MISSOURI HIGHWAYS AND TRANSPORTATION COMMISSION
105 WEST CAPITOL
JEFFERSON CITY, MO 65102
1-888-ASK-MODOT (1-888-275-6636)

HDR Engineering, Inc.
1001 Highlands Plaza Drive
Suite 200
St. Louis, MO 63110-1337
314-425-8300
Certificate of Authority: 000856

PROPOSED LUMINAIRE A2-4
45' TYPE AT POLE w/ LED-B LUMINAIRE (TOP MOUNT)
STA. 5+00.27, 11.71' RT, ℄ EXIST. RAMP 3

INSTALL 1" CABLE-CONDUIT #6 AWG (TYP.)

PROPOSED LUMINAIRE A2-5
45' TYPE AT POLE w/ LED-B LUMINAIRE (TOP MOUNT)
STA. 2+80.66, 23.02' RT, ℄ EXIST. RAMP 3

PROPOSED PREFORMED PB13
STA. 2+19.27, 25.25' RT, ℄ EXIST. RAMP 3

EX. LUMINAIRE

MATCHLINE STA. 721+00 EXIST. I-270

℄ EXIST. DUNN RD

DUNN RD

INSTALL 1" CABLE-CONDUIT #6 AWG
IN 3" RIGID CONDUIT

℄ EXIST. I-270

℄ EXIST. RAMP 3

℄ EXIST. RAMP 4

EX. LUMINAIRE

PERSHALL RD

PROPOSED PREFORMED PB14
STA. 12+93.21, 19.56' RT, ℄ EXIST. RAMP 4

PROPOSED LUMINAIRE A2-6
45' TYPE AT POLE w/ LED-B LUMINAIRE (TOP MOUNT)
STA. 13+32.38, 20.08' RT, ℄ EXIST. RAMP 4

INSTALL 1" CABLE-CONDUIT #6 AWG (TYP.)

PROPOSED LUMINAIRE A2-7
45' TYPE AT POLE w/ LED-B LUMINAIRE (TOP MOUNT)
STA. 11+22.71, 18.64' RT, ℄ EXIST. RAMP 4

PROPOSED LUMINAIRE A2-8
45' TYPE AT w/ LED-B LUMINAIRE (TOP MOUNT)
STA. 9+12.72, 17.82' RT, ℄ EXIST. RAMP 4

SCALE
0 50 100 150

I-270 LIGHTING PLAN
STA 721+00 TO STA 734+50
SHEET 3 OF 3

STATE OF MISSOURI
JASON LEE HAYNES
NUMBER PE-2004017183
PROFESSIONAL ENGINEER
THIS SHEET HAS BEEN SIGNED, SEALED, AND DATED ELECTRONICALLY

DATE PREPARED
3/25/2026

ROUTE	STATE
I-270	MO
DISTRICT	SHEET NO.
SL	104

COUNTY
ST. LOUIS

JOB NO.
J6I3020D

CONTRACT ID.

PROJECT NO.

BRIDGE NO.

DESCRIPTION	DATE

IF A SEAL IS PRESENT ON THIS SHEET IT HAS BEEN ELECTRONICALLY SEALED AND DATED.

MISSOURI HIGHWAYS AND TRANSPORTATION COMMISSION
105 WEST CAPITOL
JEFFERSON CITY, MO 65102
1-888-ASK-MODOT (1-888-275-6636)

HDR Engineering, Inc.
1001 Highlands Plaza Drive
Suite 200
St. Louis, MO 63110-1337
314-425-8300
Certificate of Authority: 000856

c:\pwworking\central01\d4169511\104_LT04_J6I3020D_I50_I-270.dgn 10:42:28 AM 3/25/2026

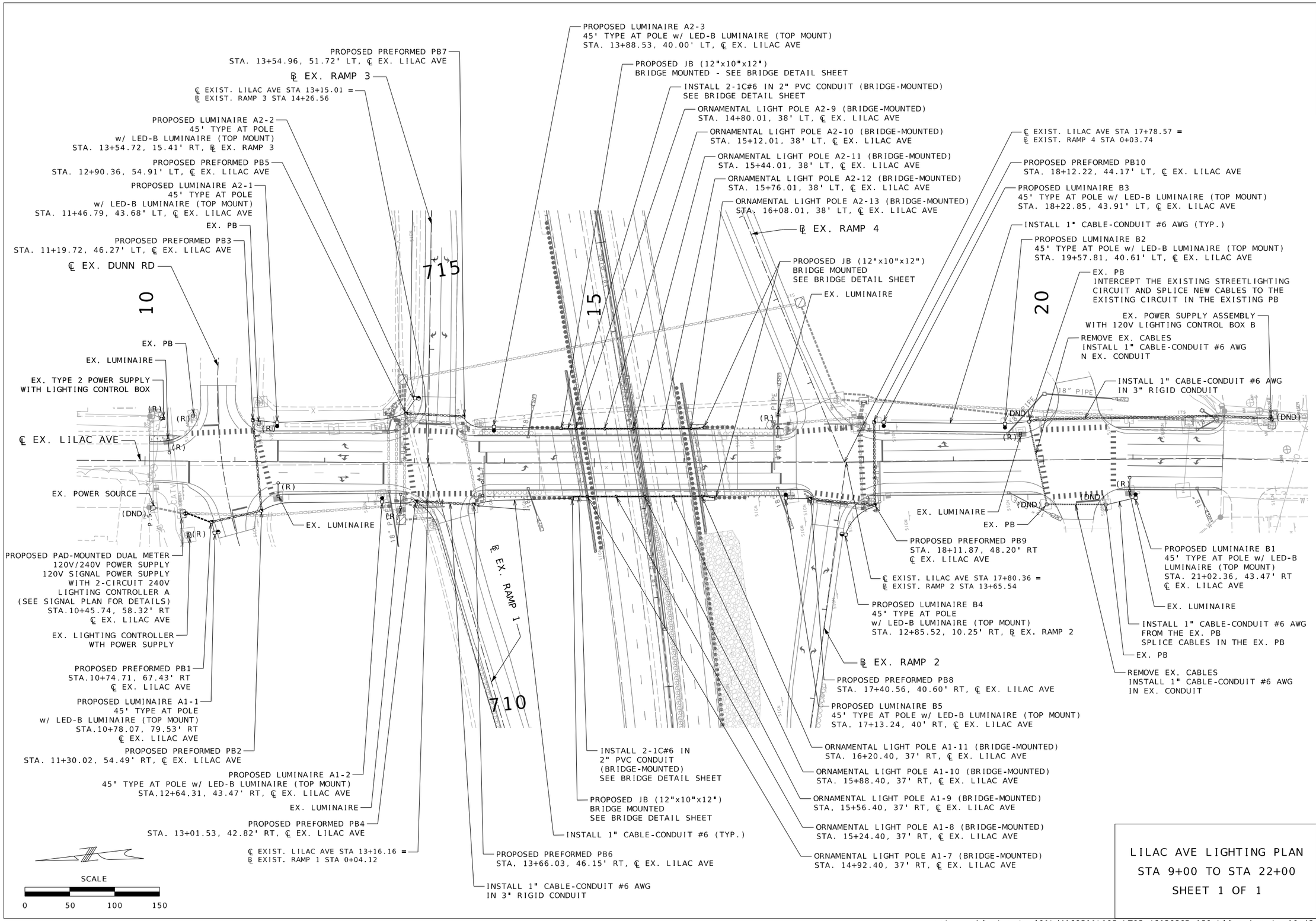

LILAC AVE LIGHTING PLAN
STA 9+00 TO STA 22+00
SHEET 1 OF 1

STATE OF MISSOURI
JASON LEE HAYNES
NUMBER PE-2004017183
PROFESSIONAL ENGINEER
THIS SHEET HAS BEEN SIGNED, SEALED, AND DATED ELECTRONICALLY

DATE PREPARED
3/25/2026

ROUTE	STATE
I-270	MO
DISTRICT	SHEET NO.
SL	105

COUNTY
ST. LOUIS

JOB NO.
J6I3020D

CONTRACT ID.

PROJECT NO.

BRIDGE NO.

DESCRIPTION	DATE

IF A SEAL IS PRESENT ON THIS SHEET IT HAS BEEN ELECTRONICALLY SEALED AND DATED.

MISSOURI HIGHWAYS AND TRANSPORTATION COMMISSION
105 WEST CAPITOL
JEFFERSON CITY, MO 65102
1-888-ASK-MODOT (1-888-275-6636)

HDR Engineering, Inc.
1001 Highlands Plaza Drive
Suite 200
St. Louis, MO 63110-1337
314-425-8300
Certificate of Authority: 000856

c:\pwworking\central01\d4169511\105_LT05_J6I3020D_I50_Lilac_Ave.dgn 10:42:35 AM 3/25/2026

SIGNING LEGEND

●	PROPOSED SIGN
●	EXISTING SIGN
(R)	REMOVE
(R&R)	REMOVE AND REPLACE
(UIP)	USE IN PLACE
*	EXISTING SIGN SHALL BE REMOVED AND A NEW MATCHING SIGN SHALL BE PLACED AT THE NEW LOCATION INDICATED

SCALE
0 50 100 150

(UIP)
EXIT 32
GAS FOOD
(UIP)

WEST 270 MILE 33 .6
D10-5
18"x60"
(R&R)

Bellefontaine Neighbors
CITY LIMIT
14-2
96"x48"
(REPLACE EX. POST)

BNSF ROW
BNSF ROW
EX. ROW
EX. ROW
℄ EXIST. DUNN RD
DUNN RD
MODOT BRIDGE ATTACHMENT
℄ EXIST. I-270
I-270 WB
I-270 EB
BEGIN FULL DEPTH PAVEMENT AND TYPE C BARRIER STA 702+44.93
S.L.
1614' SPACING
2255' SPACING
S.L.
S.L.
PERSHALL RD
EX. ROW
℄ EXIST. RAMP 1
RAMP 1
℄ EXIST. RAMP 2
RAMP 2
I-270 STA 701+05
I-270 STA 706+34
I-270 STA 700+60
I-270 STA 702+57
I-270 STA 701+05
MATCHLINE STA 707+50 EXIST. I-270

(R)
EXIT 33
Lilac Ave
3/4 MILE
RIGHT LANE ONLY
STA 663+88
(R)

(R)
EXIT 33
Lilac Ave
1/2 MILE
EXIT ONLY
STA 680+02
(R) - EX. OH SIGN

EXIT
25
M.P.H.
W13-2
36"x48"

EAST 270 MILE 33 .6
D10-5
18"x60"
*

EXIT
25
M.P.H.
W13-2
(c) 36"x48"
(R)

EXIT 33
Lilac Ave
EXIT ONLY
(R)
E1-5P
a) 96"x30"

MoDOT ADOPT-A-HIGHWAY Litter Cleanup
ADOPTER NAME
I9-1a
48"x36"
(R)

EXIT 33
E5-1a
78"x60"
(UIP)

E1-5P
a) 96"x30"
EXIT 33
Lilac Ave
1/2 MILE
E1-1
b) 156" x 72"
INSTALL ON EXISTING TRUSS

EXIT 33
Lilac Ave
E2-5
b) 156" x 84"
INSTALL NEW SIGN ON NEW TRUSS

I-270 SIGNING PLAN
STA 694+00 TO STA 707+50
SHEET 1 OF 4

STATE OF MISSOURI
EUGENE LOUIS KUEKER JR.
NUMBER PE-2010000912
PROFESSIONAL ENGINEER
THIS SHEET HAS BEEN SIGNED, SEALED, AND DATED ELECTRONICALLY.

IF A SEAL IS PRESENT ON THIS SHEET IT HAS BEEN ELECTRONICALLY SEALED AND DATED.

DATE PREPARED	3/25/2026
ROUTE	I-270
STATE	MO
DISTRICT	SL
SHEET NO.	106
COUNTY	ST. LOUIS
JOB NO.	J6I3020D
CONTRACT ID.	
PROJECT NO.	
BRIDGE NO.	

DESCRIPTION | DATE

MISSOURI HIGHWAYS AND TRANSPORTATION COMMISSION
105 WEST CAPITOL
JEFFERSON CITY, MO 65102
1-888-ASK-MODOT (1-888-275-6636)

HDR Engineering, Inc.
1001 Highlands Plaza Drive
Suite 200
St. Louis, MO 63110-1337
314-425-8300
Certificate of Authority: 000856

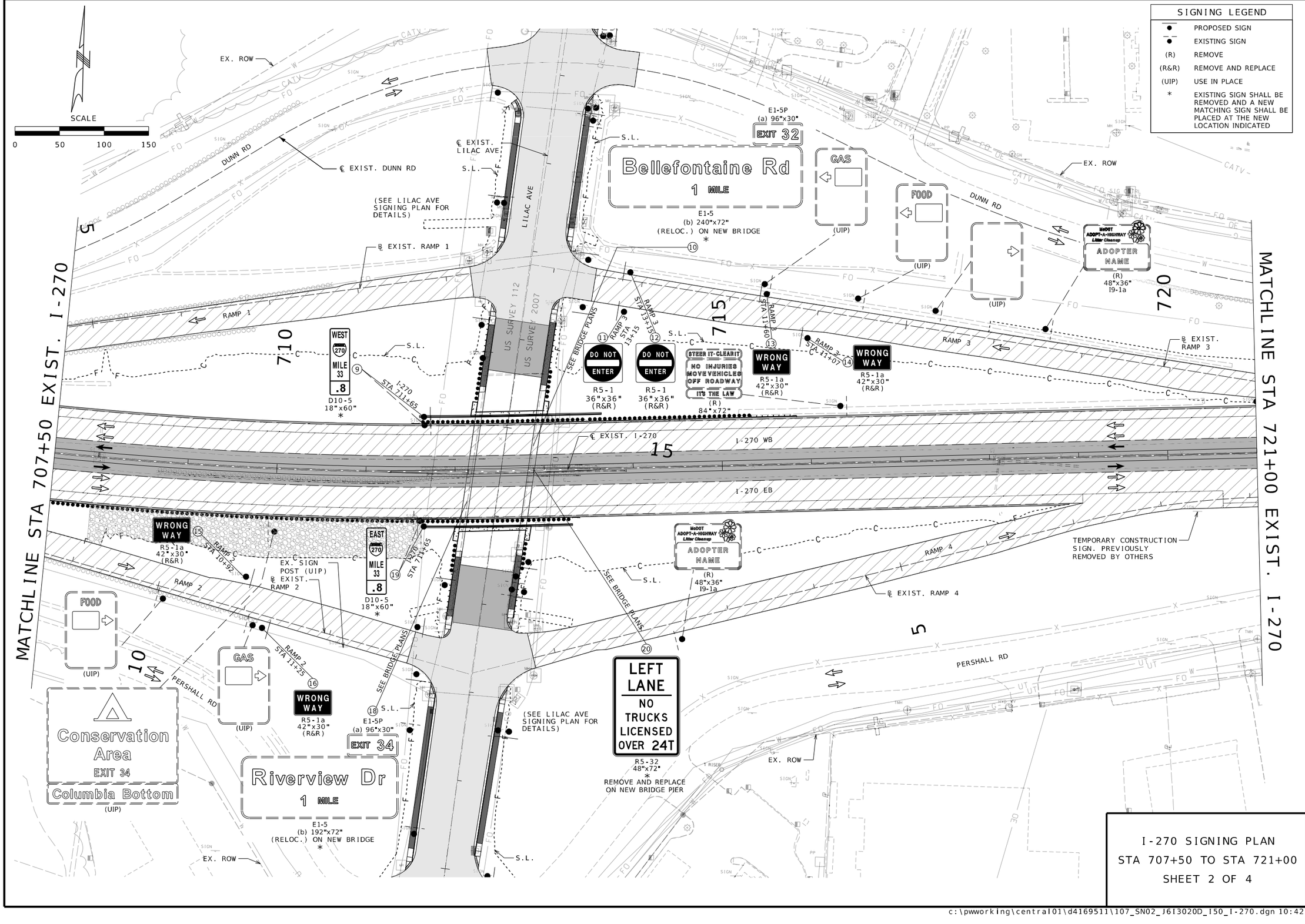

I-270 SIGNING PLAN
STA 707+50 TO STA 721+00
SHEET 2 OF 4

STATE OF MISSOURI
EUGENE LOUIS KUEKER JR.
NUMBER PE-2011002912
PROFESSIONAL ENGINEER

THIS SHEET HAS BEEN SIGNED, SEALED, AND DATED ELECTRONICALLY.

IF A SEAL IS PRESENT ON THIS SHEET IT HAS BEEN ELECTRONICALLY SEALED AND DATED.

DATE PREPARED	3/25/2026
ROUTE	I-270
STATE	MO
DISTRICT	SL
SHEET NO.	107
COUNTY	ST. LOUIS
JOB NO.	J6I3020D
CONTRACT ID.	
PROJECT NO.	
BRIDGE NO.	

DESCRIPTION | DATE

MISSOURI HIGHWAYS AND TRANSPORTATION COMMISSION
105 WEST CAPITOL
JEFFERSON CITY, MO 65102
1-888-ASK-MODOT (1-888-275-6636)

HDR Engineering, Inc.
1001 Highlands Plaza Drive
Suite 200
St. Louis, MO 63110-1337
314-425-8300
Certificate of Authority: 000856

c:\pwworking\central01\d4169511\107_SN02_J6I3020D_I50_I-270.dgn 10:42:51 AM 3/25/2026

MATCHLINE STA 721+00 EXIST. I-270

MATCHLINE STA 734+50 EXIST. I-270

E1-5P
a) 96"x30"

EXIT 33
Lilac Ave

E2-5
b) 156"x84"
INSTALL NEW SIGN
ON NEW TRUSS
21

EXIT
40
M.P.H.
W13-2
(c) 36"x48"
(R)

EXIT
40
M.P.H.
W13-2
36"x48"
INSTALL ON
BARRIER
23

EXIT
33
E5-1a
78"x60"
(UIP)

WEST 270 MILE 34 .0

WEST 270 MILE 34 .2

℄ EXIST. RAMP 3

RAMP 3

S.L.

I-270 STA 722+83

I-270 STA 723+25
22
D10-5
18"x60"
INSTALL ON
F BARRIER

I-270 STA 724+42

TEMPORARY CONSTRUCTION
SIGN. PREVIOUSLY
REMOVED BY OTHERS

TEMPORARY CONSTRUCTION
SIGN. PREVIOUSLY
REMOVED BY OTHERS

TEMPORARY CONSTRUCTION
SIGN. PREVIOUSLY
REMOVED BY OTHERS

I-270 STA 735+96
24
D10-5
18"x60"
*

EX. ROW

℄ EXIST. DUNN RD

DUNN RD

I3 BROADBAND

T RISER

I-270 WB

℄ EXIST. I-270

N87°11'37"E

I-270 EB

℄ EXIST. RAMP 4

TEMPORARY CONSTRUCTION
SIGN. PREVIOUSLY
REMOVED BY OTHERS

I-270 STA 723+25
25
EAST 270 MILE 34 .0
D10-5
18"x60"
*

MoDOT
ADOPT-A-HIGHWAY
Litter Cleanup
ADOPTER
NAME
I9-1a
48"x36"
(R)

TEMPORARY CONSTRUCTION
SIGN. PREVIOUSLY
REMOVED BY OTHERS

I-270 STA 731+90
26

SPEED
LIMIT
60
R2-1
48"x60"
(R)

SPEED
LIMIT
60
MINIMUM
40
R2-4a
48"x96"

I-270 STA 734+96
27
EAST 270 MILE 34 .2
D10-5
18"x60"
*

PERSHALL RD

EX. ROW

EVERSTREAM

10

15

725

730

SIGNING LEGEND

●	PROPOSED SIGN
●/	EXISTING SIGN
(R)	REMOVE
(R&R)	REMOVE AND REPLACE
(UIP)	USE IN PLACE
*	EXISTING SIGN SHALL BE REMOVED AND A NEW MATCHING SIGN SHALL BE PLACED AT THE NEW LOCATION INDICATED

SCALE
0 50 100 150

I-270 SIGNING PLAN
STA 721+00 TO STA 734+50
SHEET 3 OF 4

STATE OF MISSOURI
EUGENE LOUIS KUELKER JR.
NUMBER PE-2010000912
PROFESSIONAL ENGINEER

THIS SHEET HAS BEEN SIGNED, SEALED, AND DATED ELECTRONICALLY.

IF A SEAL IS PRESENT ON THIS SHEET IT HAS BEEN ELECTRONICALLY SEALED AND DATED.

DATE PREPARED	3/25/2026
ROUTE	STATE
I-270	MO
DISTRICT	SHEET NO.
SL	108
COUNTY	ST. LOUIS
JOB NO.	J6I3020D
CONTRACT ID.	
PROJECT NO.	
BRIDGE NO.	

DESCRIPTION

DATE

MISSOURI HIGHWAYS AND TRANSPORTATION COMMISSION

105 WEST CAPITOL
JEFFERSON CITY, MO 65102
1-888-ASK-MODOT (1-888-275-6636)

HDR Engineering, Inc.
1001 Highlands Plaza Drive
Suite 200
St. Louis, MO 63110-1337
314-425-8300
Certificate of Authority: 000856

c:\pwworking\central01\d4169511\108_SN03_J6I3020D_I50_I-270.dgn 10:42:59 AM 3/25/2026

MATCHLINE STA 734+50 EXIST. I-270

735

740

745

Lilac Ave 1/8
Bellefontaine Rd 1 1/2
367 2 1/4
(DND)

EX. ROW

℄ EXIST. DUNN RD

DUNN RD

I-270 WB

℄ EXIST. I-270

I-270 EB

TEMPORARY CONSTRUCTION SIGN. PREVIOUSLY REMOVED BY OTHERS

S.L.

PERSHALL RD

Riverview Dr 1/2
BUSINESS 3 3 3/4
(DND)

MoDOT ADOPT-A-HIGHWAY Litter Cleanup
ADOPTER NAME
I9-1a
48"x36"
(R)

EX. ROW

I-270 STA 743+24

EAST 270 MILE 34 .4
D10-5
18"x60"
*

END PROJECT STA 746+04.76

SIGNING LEGEND	
●	PROPOSED SIGN
●	EXISTING SIGN
(R)	REMOVE
(R&R)	REMOVE AND REPLACE
(UIP)	USE IN PLACE
*	EXISTING SIGN SHALL BE REMOVED AND A NEW MATCHING SIGN SHALL BE PLACED AT THE NEW LOCATION INDICATED

SCALE
0 50 100 150

I-270 SIGNING PLAN
STA 734+50 TO STA 748+00
SHEET 4 OF 4

STATE OF MISSOURI
EUGENE LOUIS KUEKER JR.
NUMBER PE-2011000912
PROFESSIONAL ENGINEER

THIS SHEET HAS BEEN SIGNED, SEALED, AND DATED ELECTRONICALLY.

IF A SEAL IS PRESENT ON THIS SHEET IT HAS BEEN ELECTRONICALLY SEALED AND DATED.

DATE PREPARED	
3/25/2026	
ROUTE	STATE
I-270	MO
DISTRICT	SHEET NO.
SL	109
COUNTY	
ST. LOUIS	
JOB NO.	
J6I3020D	
CONTRACT ID.	
PROJECT NO.	
BRIDGE NO.	

DATE	DESCRIPTION

MISSOURI HIGHWAYS AND TRANSPORTATION COMMISSION
105 WEST CAPITOL
JEFFERSON CITY, MO 65102
1-888-ASK-MODOT (1-888-275-6636)

HDR Engineering, Inc.
1001 Highlands Plaza Drive
Suite 200
St. Louis, MO 63110-1337
314-425-8300
Certificate of Authority: 000856

SIGNING LEGEND

●	PROPOSED SIGN
●	EXISTING SIGN
(R)	REMOVE
(R&R)	REMOVE AND REPLACE
(UIP)	USE IN PLACE
*	EXISTING SIGN SHALL BE REMOVED AND A NEW MATCHING SIGN SHALL BE PLACED AT THE NEW LOCATION INDICATED

NOTE: SEE SIGNAL SHEETS FOR SIGNS ON MAST ARMS.

EX. ROW
℄ EXIST. DUNN RD
DUNN RD
℄ EXIST. RAMP 3
N82°15'47"W
DUNN ROAD WEST EAST
72"x48" (R)
STOP R1-1 a) 36"x36" *
ALL WAY 4-WAY R1-3P b) 30"x12" * 29
12"x6" (R)
ONE WAY R6-1R a) 48"x18" (R&R)
ONE WAY R6-1L b) 48"x18" (R&R)
30 LILAC AVE STA 13+00
ONE WAY R6-1L d) 48"x18" (R&R)
ONE WAY R6-1R e) 48"x18" (R&R)
WEST BL-M3-4 a) 24"x12" (R&R)
INTERSTATE 270 BL-M1-1 b) 30"x24" (R&R)
BL-M6-1 c) 21"x15" (R&R)
LILAC AVE STA 10+43
LILAC AVE STA 10+74
LILAC AVE STA 11+30
LILAC AVE STA 13+54 31
S.L.
LILAC AVE
US SURVEY 2007
US SURVEY 112
S07°20'24"W
S06°47'34"W
Lilac Ave Dunn Rd (UIP)
LILAC AVE STA 12+52
EAST 41 WEST
BL-M3-2 a) 24"x12" *
BL-M3-4 d) 24"x12" *
INTERSTATE 270 BL-M1-1 b) 30"x24" *
INTERSTATE 270 BL-M1-1 e) 30"x24" *
BL-M6-3 c) 21"x15" *
BL-M6-1 f) 21"x15" *
DUNN ROAD EAST WEST 72"x48" (R)
40 JCT BL-M2-1 a) 21"x15" *
INTERSTATE 270 BL-M1-1 b) 30"x24" *
EX. ROW
DUNN RD
LILAC AVE STA 10+43
RAMP 1
LILAC AVE STA 15+90 42
LEFT LANE MUST TURN LEFT R3-7L 36"x36" *
WEIGHT LIMIT 60 TONS 36"x48" (R)
710
I-270 WB
I-270 EB
S80°59'36"W
℄ EXIST. RAMP 1
℄ EXIST. I-270
℄ EXIST. RAMP 4
RAMP 4
N14°37'36"E
LEFT LANE MUST TURN LEFT 34 R3-7L 36"x36" *
COMMUTER D4-1P a) 30"x6" *
P ARKING D4-1 32 b) 30"x24" *
WEIGHT LIMIT 60 TONS 36"x48" (R)
LILAC AVE STA 16+45
LILAC AVE STA 16+80
LILAC AVE STA 16+85 44
ONE WAY R6-1L a) 48"x18" (R&R)
ONE WAY R6-1R b) 48"x18" (R&R)
EAST BL-M3-2 c) 24"x12" (R&R)
INTERSTATE 270 BL-M1-1 d) 30"x24" (R&R)
BL-M6-1 e) 21"x15" (R&R)
S75°31'30"E
℄ EXIST. RAMP 2
WEST BL-M3-4 a) 24"x12" *
EAST BL-M3-2 d) 24"x12" *
INTERSTATE 270 BL-M1-1 b) 30"x24" *
INTERSTATE 270 BL-M1-1 e) 30"x24" *
BL-M6-3 c) 21"x15" * 35
BL-M6-1 f) 21"x15" *
LILAC AVE STA 17+36
LILAC AVE STA 17+88 46
DO NOT ENTER R5-1 36"x36" (R&R) 45
ONE WAY R6-1R a) 48"x18" (R&R)
ONE WAY R6-1L b) 48"x18" (R&R)
DO NOT ENTER R5-1 c) 36"x36" (R&R)
EX. BELLEFONTAINE NEIGHBORHOOD SIGN (DND)
JCT BL-M2-1 a) 21"x15" *
INTERSTATE 270 BL-M1-1 b) 30"x24" * 37
PERSHALL RD
SOUTH OUTER ROAD WEST EAST 84"x75" (R)
STOP R1-1 a) 36"x36" *
CROSS TRAFFIC DOES NOT STOP W4-4P b) 24"x12" 36
LILAC AVE STA 20+02
LILAC AVE STA 18+38
LILAC AVE STA 21+37
S.L.
℄ EXIST. LILAC AVE
S06°16'21"W
EX. ST LOUIS COUNTY ADOPT-A-HIGHWAY SIGN (RELOCATE)
LILAC AVE STA 20+10
LILAC AVE STA 20+60
STOP R1-1 a) 36"x36" * 48
LILAC AVE D3-1 a) 42"x12" * 49
PERSHALL RD D3-1 b) 46"x12" *
TRUCK ENTRANCE
BEGIN ST. LOUIS COUNTY MAINTENANCE
END ST. LOUIS COUNTY MAINTENANCE
SOUTH OUTER ROAD EAST WEST 84"x75" (R)
CROSS TRAFFIC DOES NOT STOP W4-4P b) 24"x12"
AHEAD BRIDGE WEIGHT LIMIT SINGLE UNIT 33.0 T OTHERS 33.0 T 48"x48" (R)
REMOVE AND RELOCATE ON NEW LIGHT POLE (SEE LIGHTING PLANS FOR LOCATION)
EX. ROW
℄ EXIST. LILAC AVE
S.L.
W4-4P b) 24"x12"
ONE WAY R6-1R a) 48"x18" (R&R)
ONE WAY R6-1L b) 48"x18" (R&R)
DO NOT ENTER R5-1 c) 36"x36" (R&R)
10
15
20
715

SCALE
0 50 100 150

LILAC AVE SIGNING PLAN
STA 9+00 TO STA 22+00
SHEET 1 OF 1

STATE OF MISSOURI
EUGENE LOUIS KUEKER JR.
NUMBER PE-2011000912
PROFESSIONAL ENGINEER
THIS SHEET HAS BEEN SIGNED, SEALED, AND DATED ELECTRONICALLY.

DATE PREPARED 3/25/2026

ROUTE	STATE
I-270	MO
DISTRICT	SHEET NO.
SL	110

COUNTY: ST. LOUIS
JOB NO.: J6I3020D
CONTRACT ID.:
PROJECT NO.:
BRIDGE NO.:

DESCRIPTION	DATE

IF A SEAL IS PRESENT ON THIS SHEET IT HAS BEEN ELECTRONICALLY SEALED AND DATED.

MISSOURI HIGHWAYS AND TRANSPORTATION COMMISSION
105 WEST CAPITOL
JEFFERSON CITY, MO 65102
1-888-ASK-MODOT (1-888-275-6636)

HDR Engineering, Inc.
1001 Highlands Plaza Drive
Suite 200
St. Louis, MO 63110-1337
314-425-8300
Certificate of Authority: 000856

c:\pwworking\central01\d4169511\110_SN05_J6I3020D_I50_Lilac_Ave.dgn 10:43:23 AM 3/25/2026

EFFECTIVE: 07-01-2022

SIGNS (902 SIGNAL SIGNS TABULATED ON D-37A SHEET)						CONCRETE EMBEDDED FOOTINGS	STRUCTURAL STEEL POSTS *						PIPE POSTS *					BACKING BARS **				U-CHANNEL POST	PERFORATED SQUARE STEEL TUBE												BREAK-AWAY	REMARKS AND OTHER REQUIRED ITEMS
																			2" x 3/8" BARS 2.55 LBS PER FT					2 IN. POST						2.5 IN. POST								
																										ANCHORS						ANCHORS				
SIGN NO.	SIGN SIZE	STA.	HORZ CLEAR IF NOT STD	LOC.	SIGN STL. SHT. NO.	ITEM NO. 9031010	POST DES NO.	POST NO.1	POST NO.2	POST NO.3	LBS PER FT	TOTAL ITEM NO. 9031210	PIPE SIZE	POST NO.1	POST NO.2	LBS PER FT	TOTAL ITEM NO. 9031220	NO.	LGTH	TOTAL	TOTAL	ITEM NO. 9031250A	POST NO.1	POST NO.2	TOTAL ITEM NO. 9031270A	DRIVEN 12-GA. ITEM NO. 9031271A	DRIVEN 7-GA. ITEM NO. 9031273A	CONCRETE 12-GA. ITEM NO. 9031274A	POST NO.1	POST NO.2	TOTAL ITEM NO. 9031280	2.25" INSERT (6 FT.) ITEM NO. 9031272A	DRIVEN 7-GA. ITEM NO. 9031281A	CONCRETE 7-GA. ITEM NO. 9031285	BREAK-AWAY ASSEMBLY * ITEM NO. 9031241	
						CY		LF	LF	LF		LBS	IN.	LF	LF		LBS	EACH	IN.	LF	LBS	LF	LF	LF	LF	EA	EA	EA	LF	LF	LF	EA	EA	EA	EA	
2	18"x60"	701+05		I-270		0.11							2.5	12		5.79	69.48																			
5	36"x48"	700+60		I-270		0.13							2.5	19.5		5.79	112.91																			
6	18"x60"	701+05		I-270		0.11							2.5	12.75		5.79	73.82																			
N/A	96"x48"	706+34		I-270		1.45	4	18.5	18		22	803																							2	USE EX. SIGN ON NEW POST
9	18"x60"	711+65		I-270		0.11							2.5	11.75		5.79	68.03																			
10	SEE BRIDGE PLANS																																			
11	36"x36"	13+15		RAMP 3		0.13							2.5	14.5		5.79	83.96																			
12	36"x36"	13+15		RAMP 3		0.13							2.5	14.75		5.79	85.40																			
13	42"x30"	11+60		RAMP 3		0.13							2.5	14.5		5.79	83.96																			
14	42"x30"	11+07		RAMP 3		0.13							2.5	14		5.79	81.06																			
15	42"x30"	10+92		RAMP 2		0.13							2.5	15		5.79	86.85																			
16	42"x30"	11+25		RAMP 2		0.13							2.5	16.25		5.79	94.09																			
18	SEE BRIDGE PLANS																																			
19	18"x60"	711+65		I-270		0.11							2.5	11.75		5.79	68.03																			
20	SEE BRIDGE PLANS																																			
22	18"x60"	723+25		I-270									2.5	6.75		5.79	39.08																			***
23	36"x48"	724+42		I-270									2.5	6.75		5.79	39.08																			***
24	18"x60"	733+96		I-270		0.11							2.5	11.75		5.79	68.03																			
25	18"x60"	723+25		I-270		0.11							2.5	12		5.79	69.48																			
26	48"x96"	731+90		I-270		0.36							4	21.5		10.79	231.99																			
27	18"x60"	733+96		I-270		0.11							2.5	12		5.79	69.48																			
28	18"x60"	743+24		I-270		0.11							2.5	12.75		5.79	73.82																			
29	ASSEMBLY	10+46		LILAC		0.13							2.5	13.75		5.79	79.61																			
29	ASSEMBLY	10+47		LILAC		0.13							2.5	14.5		5.79	83.96																			
29	ASSEMBLY	11+30		LILAC		0.13							2.5	14.5		5.79	83.96																			
29	ASSEMBLY	11+30		LILAC		0.13							2.5	13.75		5.79	79.61																			
30	ASSEMBLY	13+00		LILAC		0.13							2.5	13.5		5.79	78.17																			
31	ASSEMBLY	13+54		LILAC		0.36							4	17.5		10.79	188.83																			
32	ASSEMBLY	16+46		LILAC		0.13							2.5	14		5.79	81.06																			
34	36"x36"	16+80		LILAC		0.13							2.5	15		5.79	86.85																			
35	ASSEMBLY	18+38		LILAC		0.13							2.5	15		5.79	150.85	6	50	25	64															
36	ASSEMBLY	20+02		LILAC		0.13							2.5	17		5.79	98.43																			
37	ASSEMBLY	21+37		LILAC		0.13							2.5	14		5.79	81.06																			
40	ASSEMBLY	10+43		LILAC		0.13							2.5	13.5		5.79	78.17																			
41	ASSEMBLY	12+52		LILAC		0.13							2.5	15.25		5.79	152.30	6	50	25	64															
42	36"x36"	13+90		LILAC		0.13							2.5	15		5.79	86.85																			
44	ASSEMBLY	16+85		LILAC		0.36							4	18		10.79	194.22																			
45	36"x36"	17+36		LILAC		0.13							2.5	16.25		5.79	94.09																			
46	ASSEMBLY	17+88		LILAC		0.13							2.5	15.75		5.79	91.19																			
48	ASSEMBLY	20+70		LILAC		0.13							2.5	16.75		5.79	96.98																			
49	ASSEMBLY	20+76		LILAC		0.13							2.5	13.75		5.79	79.61																			
	SUBTOTAL					6.53						803					3464.35				128	0		0	0	0	0		0	0	0	0	2		
	TOTAL					6.5						810					3600.00				**	0		0	0	0	0		0	0	0	0			

* BREAKAWAY ASSEMBLY IS INCIDENTAL FOR STRUCTURAL STEEL AND PIPE POSTS.
** BACKING BARS ARE TOTALED WITH STRUCTURAL STEEL OR PIPE POSTS.
*** SIGN INSTALLED ON TYPE D BARRIER. SEE SPECIAL SHEET AND JSP FOR DETAILS.

ROUND PIPE POST AND FOOTING DATA TABLE

NOM.SIZE (IN.)	WEIGHT LBS/FT	WEIGHT LBS/IN	STUB LENGTH	FOOTING DIA.	FOOTING DEPTH	CONCRETE C.Y.
2½	5.79	0.48	4'- 3½"	12"	4~6"	0.13
3	7.58	0.63	4'- 3½"	12"	4~6"	0.13
4	10.79	0.90	5'- 3½"	18"	5~6"	0.36

STRUCTURAL STEEL POST AND FOOTING DATA TABLE

POST DES. NO.	POST NOM. SIZE	POST WEIGHT LBS/FT	POST WEIGHT LBS/IN	POST STUB LENGTH	FOOTING DIA.	FOOTING LEVEL GROUND DEPTH	FOOTING LEVEL GROUND C.Y.	FOOTING 6:1 GRADE DEPTH	FOOTING 6:1 GRADE C.Y.	FOOTING 4:1 GRADE DEPTH	FOOTING 4:1 GRADE C.Y.	FOOTING 3:1 OR 2:1 GRADE DEPTH	FOOTING 3:1 OR 2:1 GRADE C.Y.
1	W6	9.0	0.75	3'-0"	15"	3'-0"	0.14	3'-2"	0.15	3'-3"	0.16	3'-6"	0.17
2	W6	15.0	1.25	4'-0"	24"	4'-0"	0.47	4'-2"	0.50	4'-3"	0.51	4'-6"	0.54
3	W8	18.0	1.50	4'-6"	28"	4'-6"	0.71	4'-8"	0.73	4'-9"	0.74	5'-0"	0.78
4	W10	22.0	1.83	5'-0"	36"	5'-0"	1.31	5'-2"	1.36	5'-3"	1.39	5'-6"	1.45
5	W10	26.0	2.17	5'-0"	36"	5'-0"	1.31	5'-3"	1.37	5'-5"	1.43	5'-9"	1.52
6	W12	35.0	2.92	5'-6"	36"	5'-6"	1.44	5'-9"	1.52	5'-11"	1.56	6'-3"	1.65

STATE OF MISSOURI
EUGENE LOUIS KUELKER JR.
NUMBER PE-2010009912
PROFESSIONAL ENGINEER
THIS SHEET HAS BEEN SIGNED, SEALED, AND DATED ELECTRONICALLY.

DATE PREPARED 3/25/2026
ROUTE I-270 | STATE MO
DISTRICT SL | SHEET NO. 111
COUNTY ST. LOUIS
JOB NO. J6I3020D
CONTRACT ID.
PROJECT NO.
BRIDGE NO.

DESCRIPTION | DATE

IF A SEAL IS PRESENT ON THIS SHEET IT HAS BEEN ELECTRONICALLY SEALED AND DATED.

MISSOURI HIGHWAYS AND TRANSPORTATION COMMISSION
105 WEST CAPITOL
JEFFERSON CITY, MO 65102
1-888-ASK-MODOT (1-888-275-6636)

HDR Engineering, Inc.
1001 Highlands Plaza Drive
Suite 200
St. Louis, MO 63110-1337
314-425-8300
Certificate of Authority: 000856

EFFECTIVE: 10-01-2016

STANDARD SIGN ASSEMBLIES

SIGN NO.	STA.	LOC.	SH	SH	SH	SH	SH	SH	SH	SH	SH	SH	SH	SH	SH	SH	SH	SH	SH	SH	SH	SH	SH	SH	SH	ST	SH	SH	SHF	STF
			D3-1	D3-1	D4-1	D4-1P	D10-5	D10-5	D10-5	D10-5	D10-5	D10-5	D10-5	D10-5	D10-5	D10-5	M1-1	M2-1	M3-2	M3-4	M6-1	M6-3	R1-1	R1-3P	R2-4a	R3-7L	R5-1	R5-1a	R5-32	R6-1L	R6-1R	W4-4P	W13-2
			42x12	46x12	30x24	30x6	18x60	18x60	18x60	18x60	18x60	18x60	18x60	18x60	18x60	18x60	30x24	21x15	24x12	24x12	21x15	21x15	36x36	30x12	48x96	36x36	36x36	42x30	48x72	48x18	48x18	24x12	36x48
2	701+05	I-270					1																										
4	680+02	I-270																															
5	700+60	I-270																															1
6	701+05	I-270						1																									
7	702+57	I-270																															
9	711+65	I-270							1																								
11	13+15	RAMP 3																									1						
12	13+15	RAMP 3																									1						
13	11+60	RAMP 3																										1					
14	11+07	RAMP 3																										1					
15	10+92	RAMP 2																										1					
16	11+25	RAMP 2																										1					
19	711+65	I-270								1																							
20	BRIDGE	I-270																											1				
21	722+83	I-270																															
22	723+25	I-270									1																						
23	724+42	I-270																															1
24	733+96	I-270										1																					
25	723+25	I-270											1																				
26	731+90	I-270																							1								
27	733+96	I-270												1																			
28	743+24	I-270													1																		
29	10+46	LILAC																					1	1									
29	10+47	LILAC																					1	1									
29	11+30	LILAC																					1	1									
29	11+30	LILAC																					1	1									
30	13+00	LILAC																												1	1		
31	13+54	LILAC															1			1	1									1	1		
32	16+46	LILAC			1	1																											
34	16+80	LILAC																								1							
35	18+38	LILAC															2		1	1	1	1											
36	20+02	LILAC																					1									1	
37	21+37	LILAC															1	1															
40	10+43	LILAC															1	1															
41	12+52	LILAC															2		1	1	1	1											
42	13+90	LILAC																								1							
44	16+85	LILAC															1		1		1									1	1		
45	17+36	LILAC																									1						
46	17+88	LILAC																									1			1	1		
48	20+70	LILAC																					1									1	
49	20+76	LILAC	1	1																													
		TOTAL	1	1	1	1	1	1	1	1	1	1	1	1	1	8	2	3	3	4	2	6	4	1	2	4	4	1	4	4	2	2

STATE OF MISSOURI
EUGENE LOUIS KUELKER JR.
NUMBER PE-2011000912
PROFESSIONAL ENGINEER

THIS SHEET HAS BEEN SIGNED, SEALED, AND DATED ELECTRONICALLY.

IF A SEAL IS PRESENT ON THIS SHEET IT HAS BEEN ELECTRONICALLY SEALED AND DATED.

DATE PREPARED: 3/25/2026
ROUTE: I-270 | STATE: MO
DISTRICT: SL | SHEET NO.: 112
COUNTY: ST. LOUIS
JOB NO.: J6I3020D
CONTRACT ID.:
PROJECT NO.:
BRIDGE NO.:

DESCRIPTION	DATE

MISSOURI HIGHWAYS AND TRANSPORTATION COMMISSION
105 WEST CAPITOL
JEFFERSON CITY, MO 65102
1-888-ASK-MODOT (1-888-275-6636)

HDR Engineering, Inc.
1001 Highlands Plaza Drive
Suite 200
St. Louis, MO 63110-1337
314-425-8300
Certificate of Authority: 000856

STANDARD SIGN ASSEMBLIES

STANDARD SIGN OR SPECIAL SIGN NUMBER	SIGN DETAIL SHEET NO.	NO. EACH	SIZE	SIZE, TYPE & SQUARE FEET		
				FLAT SHEET SH ITEM NO. 9035004A	FLAT SHEET FLUORESCENT SHF * ITEM NO. 9035069A	STRUCTURAL ST ITEM NO. 9035011A
STREET NAME "LILAC AVE" - D3-1	STD	1	42 x 12	4		
STREET NAME "PERSHALL RD" - D3-1	STD	1	46 x 12	4		
PARKING AREA - D4-1	STD	1	30 x 24	5		
COMMUTER - D4-1P	STD	1	30 x 6	1		
WEST I-270 MILE 33.6 - D10-5	STD	1	18 x 60	8		
EAST I-270 MILE 33.6 - D10-5	STD	1	18 x 60	8		
WEST I-270 MILE 33.8 - D10-5	STD	1	18 x 60	8		
EAST I-270 MILE 33.8 - D10-5	STD	1	18 x 60	8		
WEST I-270 MILE 34.0 - D10-5	STD	1	18 x 60	8		
WEST I-270 MILE 34.2 - D10-5	STD	1	18 x 60	8		
EAST I-270 MILE 34.0 - D10-5	STD	1	18 x 60	8		
EAST I-270 MILE 34.2 - D10-5	STD	1	18 x 60	8		
EAST I-270 MILE 34.4 - D10-5	STD	1	18 x 60	8		
LILAC AVE 1/2 MILE - E1-1	114	1	156 x 72			78
EXIT 33 - E1-5P	114, 117	3	96 x 30			60
LILAC AVE EXIT DIRECTION - E2-5	114, 117	2	156 x 84			182
INTERSTATE ROUTE SIGN - M1-1	STD	8	30 x 24	40		
JUNCTION - M2-1	STD	2	21 x 15	4		
EAST - M3-2	STD	3	24 x 12	6		
WEST - M3-4	STD	3	24 x 12	6		
DIRECTIONAL ARROW (RIGHT) - M6-1	STD	4	21 x 15	8		
DIRECTIONAL ARROW (STRAIGHT) - M6-3	STD	2	21 x 15	4		
STOP - R1-1	STD	6	36 x 36	54		
ALL WAY - R1-3P	STD	4	30 x 12	12		
COMBINED SPEED LIMIT - R2-4a	STD	1	48 x 96	32		
LEFT LANE MUST TURN LEFT - R3-7L	STD	2	36 x 36	18		
DO NOT ENTER - R5-1	STD	4	36 x 36	36		
WRONG WAY - R5-1a	STD	4	42 x 30	36		
R5-32	STD	1	48 x 72			24
ONE WAY LEFT - R6-1L	STD	4	48 x 18	24		
ONE WAY RIGHT - R6-1R	STD	4	48 x 18	24		
CROSS TRAFFIC DOES NOT STOP - W4-4P	STD	2	24 x 12		4	
ADVISORY EXIT SPEED - W13-2	STD	2	36 x 48		24	
		TOTAL		390	28	344

* ORANGE, YELLOW & YELLOW/GREEN

STATE OF MISSOURI
EUGENE LOUIS KUEKER JR.
NUMBER PE-2010009912
PROFESSIONAL ENGINEER
THIS SHEET HAS BEEN SIGNED, SEALED, AND DATED ELECTRONICALLY.

DATE PREPARED 3/25/2026
ROUTE I-270 | STATE MO
DISTRICT SL | SHEET NO. 113
COUNTY ST. LOUIS
JOB NO. J6I3020D
CONTRACT ID.
PROJECT NO.
BRIDGE NO.

DESCRIPTION | DATE

IF A SEAL IS PRESENT ON THIS SHEET IT HAS BEEN ELECTRONICALLY SEALED AND DATED.

MISSOURI HIGHWAYS AND TRANSPORTATION COMMISSION
105 WEST CAPITOL
JEFFERSON CITY, MO 65102
1-888-ASK-MODOT (1-888-275-6636)

HDR Engineering, Inc.
1001 Highlands Plaza Drive
Suite 200
St. Louis, MO 63110-1337
314-425-8300
Certificate of Authority: 000856



E1-5P ST-STRUCTURAL;
6.000" Radius, 2.000" Border, White on, Green;
"EXIT", E Mod; "33", E Mod;

E1-1 ST-STRUCTURAL;
9.000" Radius, 2.000" Border, White on, Green;
"Lilac Ave", E Mod; "½", E Mod; "MILE", E Mod;
Table of letter and object lefts

E 11.125	**X** 20.625	**I** 31.375	**T** 35.375	**3** 57.875	**3** 72.875		
L 18.625	**I** 35.375	**I** 44.500	**a** 52.375	**c** 67.375	**A** 93.500	**v** 112.125	**e** 127.125
½ 43.375	**M** 79.375	**I** 91.125	**L** 95.625	**E** 105.125			

SIGN NO.	4
STATION	680+02
ROADWAY	I-270



E1-5P ST-STRUCTURAL;
6.000" Radius, 2.000" Border, White on, Green;
"EXIT", E Mod; "33", E Mod;

E1-1 ST-STRUCTURAL;
9.000" Radius, 2.000" Border, White on, Green;
"Lilac Ave", E Mod; Arrow 160 - 35.000" 45';
Table of letter and object lefts

E 11.125	**X** 20.625	**I** 31.375	**T** 35.375	**3** 57.875	**3** 72.875		
L 18.625	**I** 35.375	**I** 44.500	**a** 52.375	**c** 67.375	**A** 93.500	**v** 112.125	**e** 127.125
⇗ 64.250							

SIGN NO.	7
STATION	702+57
ROADWAY	I-270

STATE OF MISSOURI
EUGENE LOUIS KUELKER JR.
NUMBER PE-2010000912
PROFESSIONAL ENGINEER
THIS SHEET HAS BEEN SIGNED, SEALED, AND DATED ELECTRONICALLY.

DATE PREPARED 3/25/2026

ROUTE	STATE
I-270	MO
DISTRICT	SHEET NO.
SL	114

COUNTY: ST. LOUIS
JOB NO.: J6I3020D
CONTRACT ID.:
PROJECT NO.:
BRIDGE NO.:

DESCRIPTION	DATE

IF A SEAL IS PRESENT ON THIS SHEET IT HAS BEEN ELECTRONICALLY SEALED AND DATED.

MISSOURI HIGHWAYS AND TRANSPORTATION COMMISSION
105 WEST CAPITOL
JEFFERSON CITY, MO 65102
1-888-ASK-MODOT (1-888-275-6636)

HDR Engineering, Inc.
1001 Highlands Plaza Drive
Suite 200
St. Louis, MO 63110-1337
314-425-8300
Certificate of Authority: 000856

SIGN NO.	10
STATION	BRIDGE
ROADWAY	I-270

SIGN DETAILS INCLUDED FOR INFORMATION ONLY

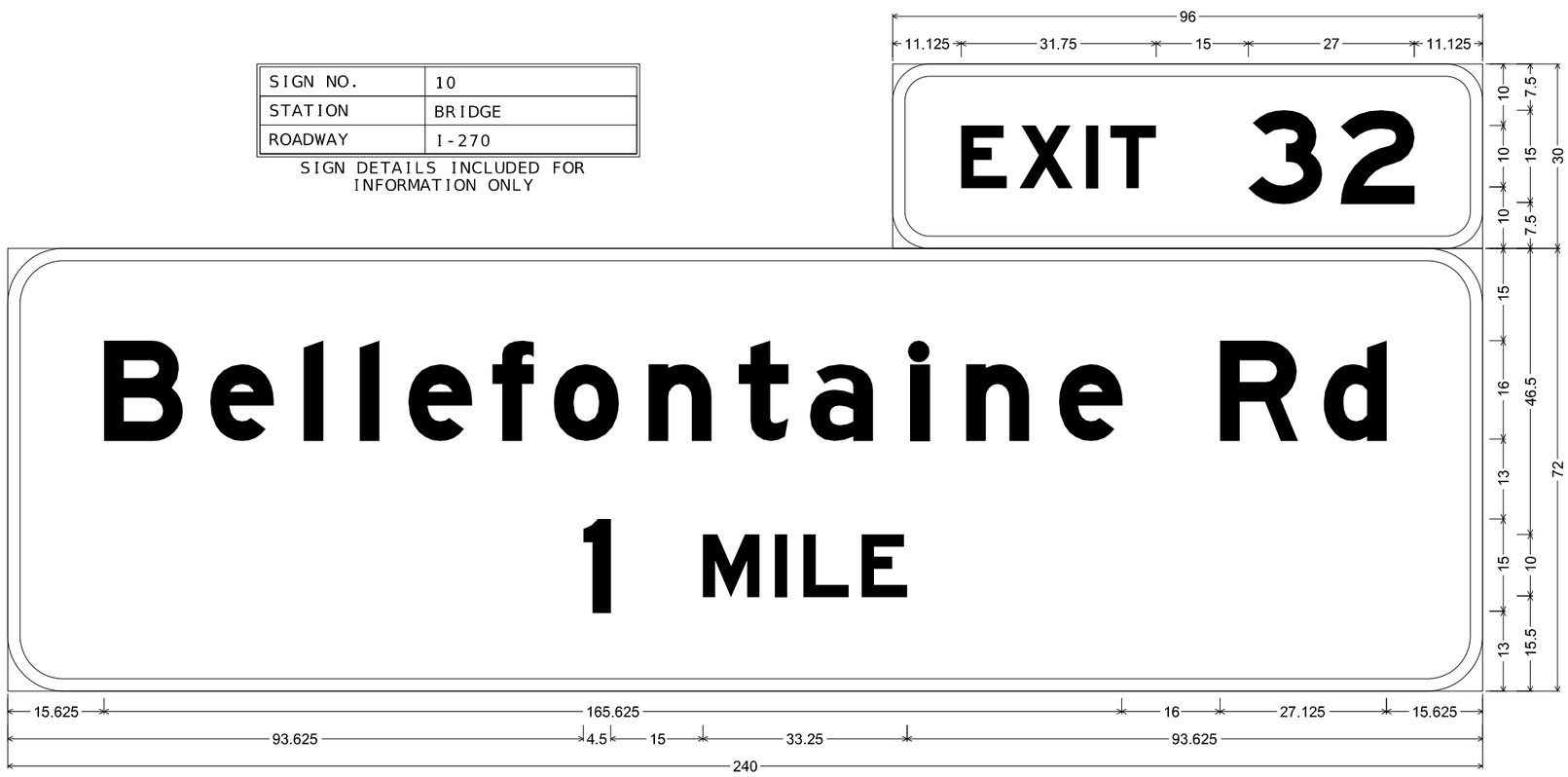

E1-5P ST-STRUCTURAL;
6.000" Radius, 2.000" Border, White on, Green;
"EXIT", E Mod; "32", E Mod;

E1-1 ST-STRUCTURAL;
9.000" Radius, 2.000" Border, White on, Green;
"Bellefontaine Rd", E Mod; "1", E Mod; "MILE", E Mod;
Table of letter and object lefts

E 11.125	**X** 20.625	**I** 31.375	**T** 35.375	**3** 57.875	**2** 72.875

B 15.625	**e** 32.875	**l** 48.125	**l** 57.250	**e** 65.125	**f** 78.875	**o** 88.875	**n** 104.250	**t** 118.875	**a** 130.500	**l** 146.750	**n** 155.875	**e** 171.000	**R** 197.250	**d** 214.125

l 93.625	**M** 113.125	**I** 124.875	**L** 129.500	**E** 138.875

STATE OF MISSOURI
EUGENE LOUIS KUELKER JR.
NUMBER PE-2010000912
PROFESSIONAL ENGINEER
THIS SHEET HAS BEEN SIGNED, SEALED, AND DATED ELECTRONICALLY.

DATE PREPARED 3/25/2026
ROUTE I-270 | STATE MO
DISTRICT SL | SHEET NO. 115
COUNTY ST. LOUIS
JOB NO. J6I3020D
CONTRACT ID.
PROJECT NO.
BRIDGE NO.

DESCRIPTION | DATE

IF A SEAL IS PRESENT ON THIS SHEET IT HAS BEEN ELECTRONICALLY SEALED AND DATED.

MISSOURI HIGHWAYS AND TRANSPORTATION COMMISSION
105 WEST CAPITOL
JEFFERSON CITY, MO 65102
1-888-ASK-MODOT (1-888-275-6636)

HDR Engineering, Inc.
1001 Highlands Plaza Drive
Suite 200
St. Louis, MO 63110-1337
314-425-8300
Certificate of Authority: 000856

SIGN NO.	18
STATION	BRIDGE
ROADWAY	I-270

SIGN DETAILS INCLUDED FOR INFORMATION ONLY

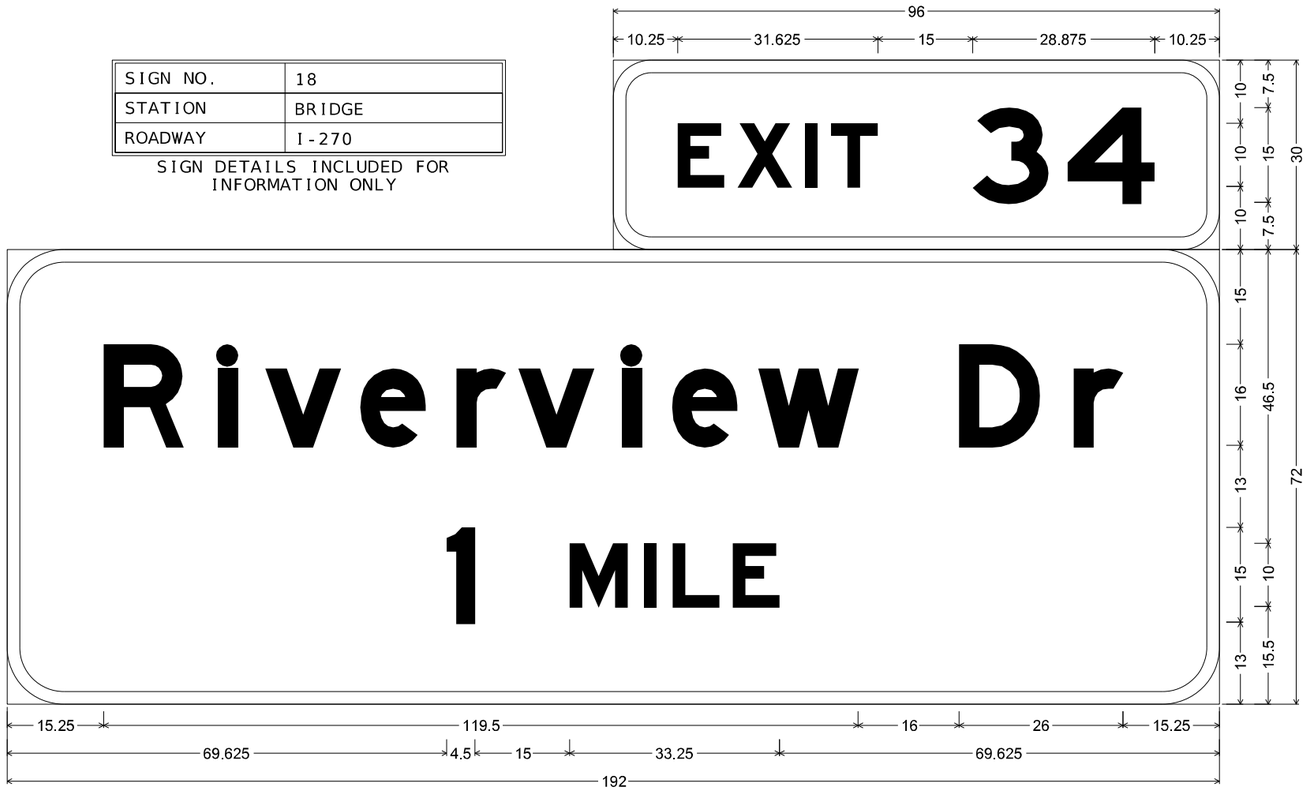

E1-5P ST-STRUCTURAL;
6.000" Radius, 2.000" Border, White on, Green;
"EXIT", E Mod; "34", E Mod;

E1-1 ST-STRUCTURAL;
9.000" Radius, 2.000" Border, White on, Green;
"Riverview Dr", E Mod; "1", E Mod; "MILE", E Mod;
Table of letter and object lefts

E 10.250	**X** 19.750	**I** 30.375	**T** 34.500	**3** 56.875	**4** 72.000

R 15.250	**I** 33.375	**v** 40.875	**e** 56.000	**r** 71.125	**v** 81.000	**I** 97.375	**e** 105.375	**w** 119.000	**D** 150.750	**r** 168.875

1 69.625	**M** 89.125	**I** 100.875	**L** 105.500	**E** 114.875

STATE OF MISSOURI
EUGENE LOUIS KUEKER JR.
NUMBER PE-2011000912
PROFESSIONAL ENGINEER
THIS SHEET HAS BEEN SIGNED, SEALED, AND DATED ELECTRONICALLY.

DATE PREPARED 3/25/2026
ROUTE I-270 | STATE MO
DISTRICT SL | SHEET NO. 116
COUNTY ST. LOUIS
JOB NO. J6I3020D
CONTRACT ID.
PROJECT NO.
BRIDGE NO.

DESCRIPTION	DATE

IF A SEAL IS PRESENT ON THIS SHEET IT HAS BEEN ELECTRONICALLY SEALED AND DATED.

MISSOURI HIGHWAYS AND TRANSPORTATION COMMISSION
105 WEST CAPITOL
JEFFERSON CITY, MO 65102
1-888-ASK-MODOT (1-888-275-6636)

HDR Engineering, Inc.
1001 Highlands Plaza Drive
Suite 200
St. Louis, MO 63110-1337
314-425-8300
Certificate of Authority: 000856



R5-32 SH-FLAT SHEET;
3.000" Radius, 1.250" Border, 0.750" Indent, Black on, White;
"LEFT", D; "LANE", D; "NO", D; "TRUCKS", D;
"LICENSED", D; "OVER 24T", D 50% spacing;
Table of letter and object lefts

L 12.250	E 18.625	F 25.000	T 30.875
L 11.125	A 16.500	N 24.750	E 32.000
— 6.000			
N 19.125	O 24.625		
T 9.000	R 13.750	U 19.125	C 24.625	K 29.750	S 35.000
L 5.625	I 10.375	C 12.750	E 17.875	N 22.625	S 28.125	E 33.625	D 38.375
O 4.125	V 8.875	E 14.000	R 18.250	2 28.250	4 33.625	T 39.625	

SIGN NO.	20
STATION	BRIDGE PIER
ROADWAY	I-270

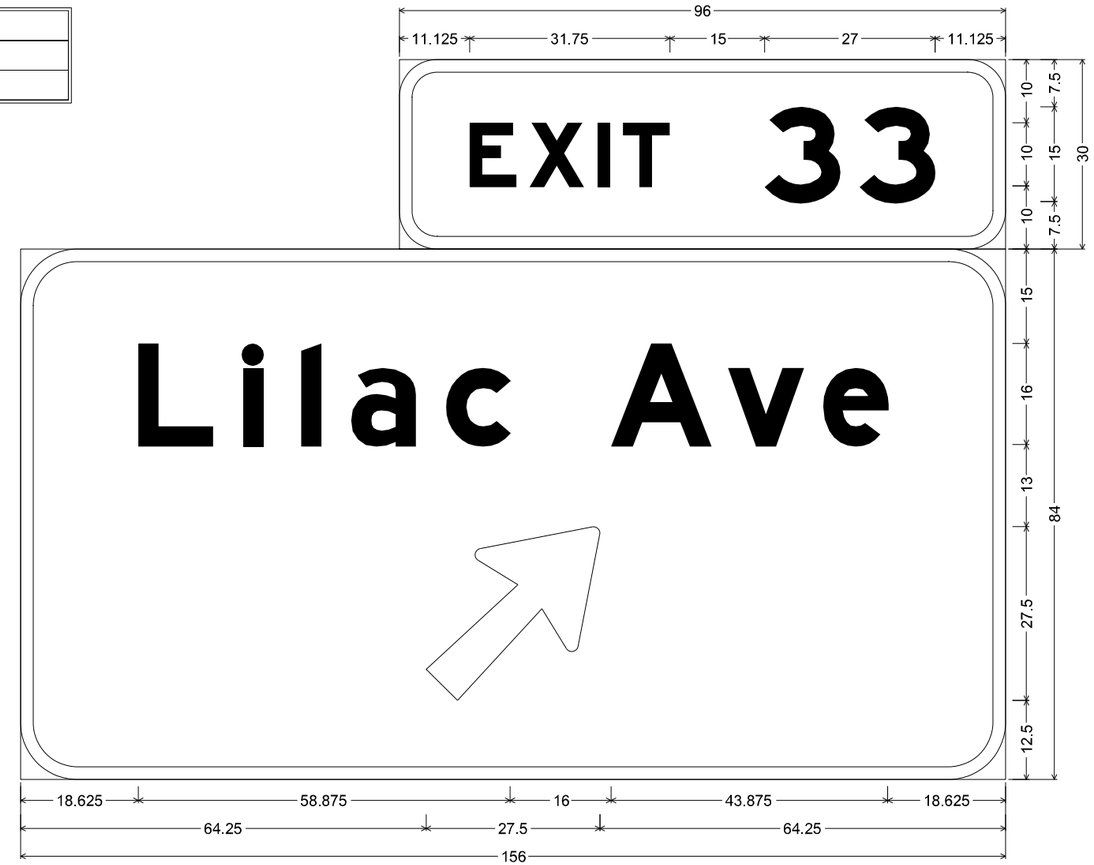

E1-5P ST-STRUCTURAL;
6.000" Radius, 2.000" Border, White on, Green;
"EXIT", E Mod; "33", E Mod;

E1-1 ST-STRUCTURAL;
9.000" Radius, 2.000" Border, White on, Green;
"Lilac Ave", E Mod; Arrow 160 - 35.000" 45';
Table of letter and object lefts

E 11.125	**X** 20.625	**I** 31.375	**T** 35.375	**3** 57.875	**3** 72.875		
L 18.625	**i** 35.375	**l** 44.500	**a** 52.375	**c** 67.375	**A** 93.500	**v** 112.125	**e** 127.125
⇗ 64.250							

SIGN NO.	21
STATION	722+83
ROADWAY	I-270

STATE OF MISSOURI
EUGENE LOUIS KUELKER JR.
NUMBER PE-2010000912
PROFESSIONAL ENGINEER

THIS SHEET HAS BEEN SIGNED, SEALED, AND DATED ELECTRONICALLY.

DATE PREPARED 3/25/2026
ROUTE I-270 | STATE MO
DISTRICT SL | SHEET NO. 117
COUNTY ST. LOUIS
JOB NO. J6I3020D
CONTRACT ID.
PROJECT NO.
BRIDGE NO.

DESCRIPTION	DATE

IF A SEAL IS PRESENT ON THIS SHEET IT HAS BEEN ELECTRONICALLY SEALED AND DATED.

MISSOURI HIGHWAYS AND TRANSPORTATION COMMISSION
105 WEST CAPITOL
JEFFERSON CITY, MO 65102
1-888-ASK-MODOT (1-888-275-6636)

HDR Engineering, Inc.
1001 Highlands Plaza Drive
Suite 200
St. Louis, MO 63110-1337
314-425-8300
Certificate of Authority: 000856

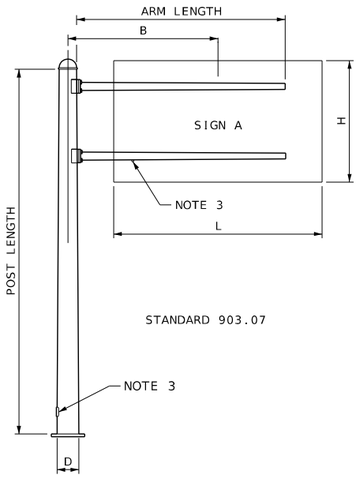

STANDARD 903.07

TWO TUBE - TYPE C

TUBULAR STEEL SUPPORT NUMBERING SYSTEM

THE FIRST SYMBOL (LETTER) INDICATES TYPE AS, C FOR CANTILEVER, B FOR BUTTERFLY, S FOR SPAN TYPE.

THE SECOND SYMBOL (NUMBER) INDICATES SINGLE (1) OR DOUBLE (2) MAST ARMS OR TRUSS.

THE THIRD SYMBOL (NUMBER) INDICATES GAGE - POST
7 = 7 GAUGE (.1793") 77 = 7 + 7 GAUGE (.3586")
3 = 3 GAUGE (.2500") 33 = 3 + 3 GAUGE (.5000")
0 = 0 GAUGE (.3125") 00 = 0 + 0 GAUGE (.6250")

THE FOURTH SYMBOL (NUMBER) INDICATES DIAMETER IN INCHES OF THE POST BASE.

THE FIFTH SYMBOL (NUMBER) INDICATES LENGTH IN FEET OF ARM OR SPAN.

EXAMPLE: DESIGN NUMBER B-20018-24 INDICATES BUTTERFLY TYPE, TWO ARMS, 2-PLY, O-GAUGE, 18" DIAMETER AT BASE OF POST & 24' MAST ARMS.

NOTES

1. ALL POSTS, BEAMS, MAST ARMS, ANGLES, BRACKETS & ETC. SHALL BE HOT DIP GALVANIZED AFTER FABRICATION.
2. SHOP DRAWINGS ARE NOT REQUIRED.
3. HANDHOLES AND 1¼" BLIND HALF COUPLINGS REQUIRED ON DESIGNATED POSTS. HANDHOLES SHALL BE PLACED ON RIGHT HAND SHOULDER SIDE OF TRUSSES.
4. STRUCTURES DESIGNED FOR TOTAL SIGN AREA COMMENSURATE WITH HEIGHT OF SIGN AND REQUIRED VERTICAL CEARANCE.
5. DESIGN SPECIFICATIONS: AASHTO STANDARD SPECIFICATIONS FOR STRUCTURAL SUPPORTS FOR HIGHWAY SIGNS, LUMINAIRES, AND TRAFFIC SIGNALS - 1985.

TUBULAR STEEL SUPPORT DESIGN DATA STANDARDS 903.05 THRU 903.08

SIGN NUMBER	STATION	LOCATION	STANDARD NUMBER	TYPE	SPAN OR ARM	B LENGTH	POST LENGTH NO. 1	POST LENGTH NO. 2	CONCRETE FOOTINGS	SIGN DATA																				
										SPREAD	SIGN A		SPACE	SIGN B		SPACE	SIGN C		SPACE	SIGN D		SPACE	SIGN E		SPACE	TOTAL
											L	H		L	H		L	H		L	H		L	H		
					FT-IN.	FT-IN.	FT	FT	CU YDS	FT-IN.	FT-IN.	FT-IN.	FT-IN.	FT-IN.	FT-IN.	FT-IN.	FT-IN.	FT-IN.	FT-IN.	FT-IN.	FT-IN.	FT-IN.	FT-IN.	FT-IN.	FT-IN.	FT-IN.	FT-IN.	SQ FT
7	702+57.00	EB I-270	903.07	C	28'-0"	23'-6"	22'		5.29		8'-0"	2'-6"	0'-0"	13'-0"	7'-0"												111
21	722+83.00	WB I-270	903.07	C	28'-0"	23'-6"	19'		5.26		8'-0"	2'-6"	0'-0"	13'-0"	7'-0"												111

IF A SEAL IS PRESENT ON THIS SHEET IT HAS BEEN ELECTRONICALLY SEALED AND DATED.

STATE OF MISSOURI
EUGENE LOUIS KUEVER JR.
NUMBER PE-2010000912
PROFESSIONAL ENGINEER

THIS SHEET HAS BEEN SIGNED, SEALED, AND DATED ELECTRONICALLY.

DATE PREPARED 3/25/2026

ROUTE	STATE
I-270	MO
DISTRICT	SHEET NO.
SL	118

COUNTY ST. LOUIS

JOB NO. J6I3020D

CONTRACT ID.

PROJECT NO.

BRIDGE NO.

DESCRIPTION	DATE

MISSOURI HIGHWAYS AND TRANSPORTATION COMMISSION
105 WEST CAPITOL
JEFFERSON CITY, MO 65102
1-888-ASK-MODOT (1-888-275-6636)

HDR Engineering, Inc.
1001 Highlands Plaza Drive
Suite 200
St. Louis, MO 63110-1337
314-425-8300
Certificate of Authority: 000856

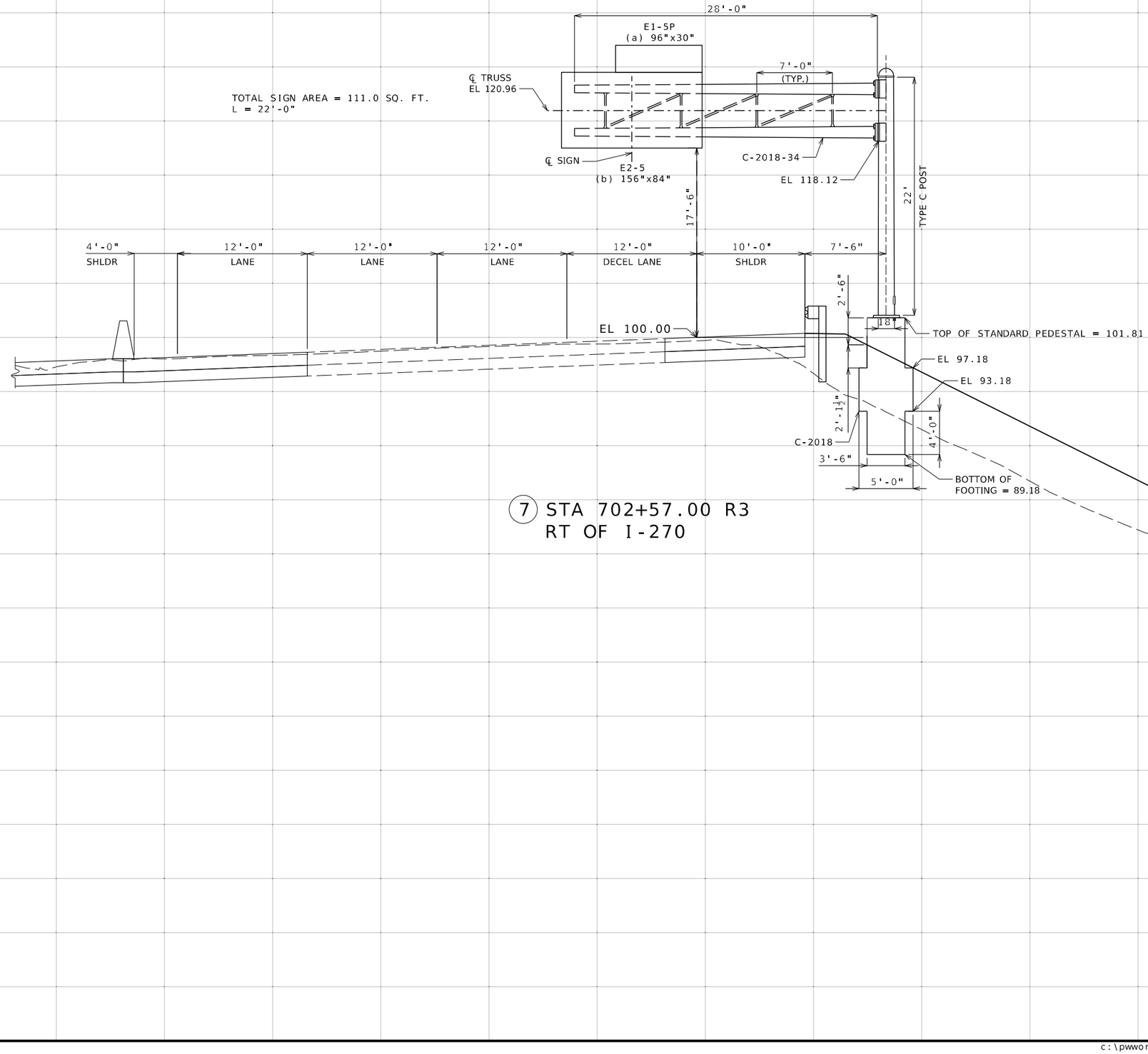

7 STA 702+57.00 R3
RT OF I-270

STRUCTURAL SIGN &
OVERHEAD SIGN TRUSS
CROSS SECTIONS
SHEET 1 OF 2

STATE OF MISSOURI
EUGENE LOUIS KUELKER JR.
NUMBER PE-2010009912
PROFESSIONAL ENGINEER

THIS SHEET HAS BEEN SIGNED, SEALED, AND DATED ELECTRONICALLY.

IF A SEAL IS PRESENT ON THIS SHEET IT HAS BEEN ELECTRONICALLY SEALED AND DATED.

DATE PREPARED: 3/25/2026
ROUTE: I-270 | STATE: MO
DISTRICT: SL | SHEET NO.: 119
COUNTY: ST. LOUIS
JOB NO.: J6I3020D
CONTRACT ID.:
PROJECT NO.:
BRIDGE NO.:

DESCRIPTION | DATE

MISSOURI HIGHWAYS AND TRANSPORTATION COMMISSION
105 WEST CAPITOL
JEFFERSON CITY, MO 65102
1-888-ASK-MODOT (1-888-275-6636)

HDR Engineering, Inc.
1001 Highlands Plaza Drive
Suite 200
St. Louis, MO 63110-1337
314-425-8300
Certificate of Authority: 000856

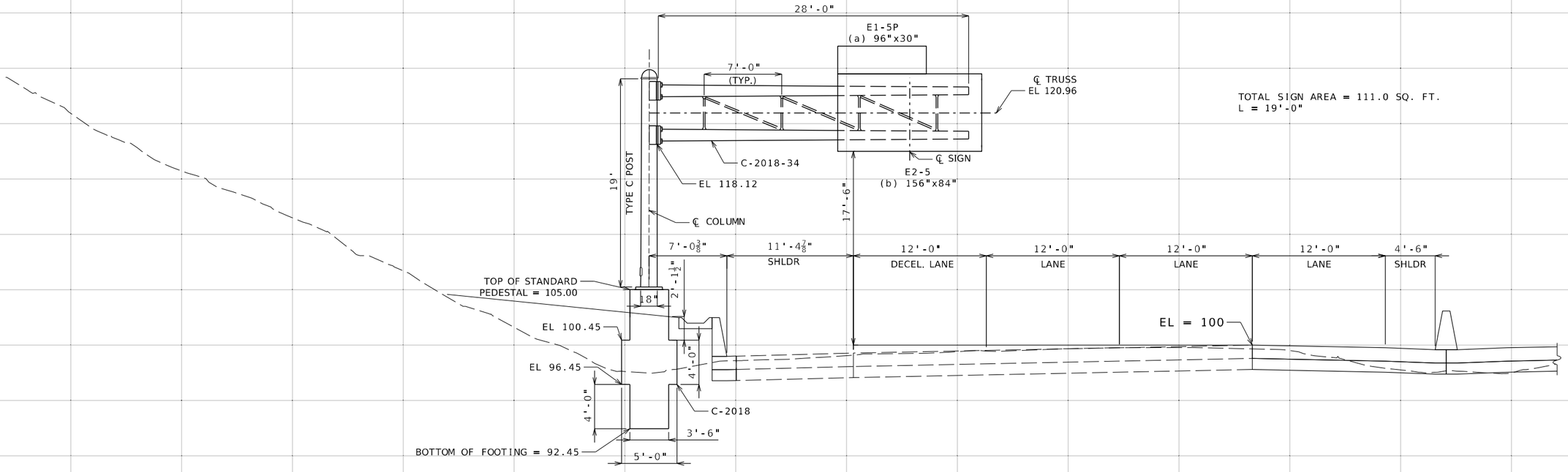

21 STA 722+83.00 R3
LT OF I-270

STRUCTURAL SIGN &
OVERHEAD SIGN TRUSS
CROSS SECTIONS
SHEET 2 OF 2

STATE OF MISSOURI
EUGENE LOUIS KUEKER JR.
NUMBER PE-2010020912
PROFESSIONAL ENGINEER

THIS SHEET HAS BEEN SIGNED, SEALED, AND DATED ELECTRONICALLY.

DATE PREPARED 3/25/2026
ROUTE I-270 | STATE MO
DISTRICT SL | SHEET NO. 120
COUNTY ST. LOUIS
JOB NO. J6I3020D
CONTRACT ID.
PROJECT NO.
BRIDGE NO.

DESCRIPTION | DATE

IF A SEAL IS PRESENT ON THIS SHEET IT HAS BEEN ELECTRONICALLY SEALED AND DATED.

MISSOURI HIGHWAYS AND TRANSPORTATION COMMISSION
105 WEST CAPITOL
JEFFERSON CITY, MO 65102
1-888-ASK-MODOT (1-888-275-6636)

HDR Engineering, Inc.
1001 Highlands Plaza Drive
Suite 200
St. Louis, MO 63110-1337
314-425-8300
Certificate of Authority: 000856

SIGNAL LEGEND

- EX. CONDUIT
- EX. PEDESTRIAN SIGNAL HEAD
- EX. TRAFFIC SIGNAL HEAD
- EXISTING SIGNAL POLE MOUNTED LUMINAIRE
- EX. PUSHBUTTON DETECTOR (PB)
- EX. POWER SUPPLY
- EX. PULL BOX
- EX. POST & MAST ARM
- EX. CONTROLLER CABINET AND BASE
- EX. VIDEO DETECTION CAMERA
- EX. PREMPTION DETECTOR
- EX. DETECTION ZONE
- EX. PULL BOX IDENTIFIER
- EX. SIGNAL POLE IDENTIFIER
- EX. SIGNAL/PED. HEAD IDENTIFIER
- EX. PED. PUSHBUTTON IDENTIFIER

TO EXISTING POWER SUPPLY AND LIGHTING CONTROLLER (UIP)

SCALE
0 20 40 60

LILAC AVE

REMOVE EXISTING SIGNAL PULLBOXES

REMOVE EXISTING SIGNAL CABINET
REMOVE EXISTING SIGNAL CABINET FOUNDATION

REMOVE EXISTING SIGNAL PULLBOX

REMOVE EXISTING PED PEDESTAL POLE
REMOVE EXISTING PED HEAD AND PED BUTTON
REMOVE FOUNDATION

REMOVE EXISTING SIGNAL POLE AND ARM
REMOVE EXISTING SIGNAL HEADS
REMOVE EXISTING PED HEAD AND PED BUTTON
REMOVE VIDEO DETECTOR
FOUNDATION TO BE REMOVED 2' BELOW GRADE

REMOVE EXISTING SIGNAL PULLBOX

REMOVE EXISTING PED PEDESTAL POLE
REMOVE EXISTING PED HEAD AND PED BUTTON
REMOVE FOUNDATION

REMOVE EXISTING SIGNAL POLE AND ARM
REMOVE EXISTING SIGNAL HEADS
REMOVE EXISTING PED HEAD AND PED BUTTON
REMOVE EXISTING VIDEO DETECTOR
FOUNDATION TO BE REMOVED 2' BELOW GRADE

℄ EXIST. LILAC AVE STA 13+15.01 =
℄ EXIST. RAMP 3 STA 14+26.56

RAMP 3

℄ EXIST. RAMP 3

℄ EXIST. LILAC AVE

℄ EXIST. LILAC AVE STA 13+16.16 =
℄ EXIST. RAMP 1 STA 0+04.12

RAMP 1

℄ EXIST. RAMP 1

REMOVE EXISTING PED PEDESTAL POLE
REMOVE EXISTING PED HEAD AND PED BUTTON
REMOVE FOUNDATION

REMOVE EXISTING SIGNAL PULLBOX

REMOVE EXISTING SIGNAL PULLBOX

REMOVE EXISTING SIGNAL POLE AND ARM
REMOVE EXISTING SIGNAL HEADS
REMOVE EXISTING PED HEAD AND PED BUTTON
REMOVE EXISTING VIDEO DETECTOR
FOUNDATION TO BE REMOVED 2' BELOW GRADE

EXISTING SIGNAL PLAN
I-270 WB RAMPS AND LILAC AVE
SHEET 1 OF 7

THIS SHEET HAS BEEN SIGNED, SEALED, AND DATED ELECTRONICALLY
JASON LEE HAYNES
NUMBER PE-2004017183
PROFESSIONAL ENGINEER
STATE OF MISSOURI

IF A SEAL IS PRESENT ON THIS SHEET IT HAS BEEN ELECTRONICALLY SEALED AND DATED.

DATE PREPARED: 3/25/2026
ROUTE: I-270 | STATE: MO
DISTRICT: SL | SHEET NO.: 121
COUNTY: ST. LOUIS
JOB NO.: J6I3020D
CONTRACT ID.:
PROJECT NO.:
BRIDGE NO.:

DESCRIPTION	DATE

MISSOURI HIGHWAYS AND TRANSPORTATION COMMISSION
105 WEST CAPITOL
JEFFERSON CITY, MO 65102
1-888-ASK-MODOT (1-888-275-6636)

HDR Engineering, Inc.
1001 Highlands Plaza Drive
Suite 200
St. Louis, MO 63110-1337
314-425-8300
Certificate of Authority: 000856

TRAFFIC SIGNALS LEGEND

- CONTROLLER WITH PAD
- CONTROLLER (EXISTING)
- JUNCTION BOX
- POWER SOURCE
- POWER SUPPLY
- SIGNAL HEAD (PEDESTRIAN)
- SIGNAL HEAD (STANDARD)
- VIDEO DETECTOR
- PUSH BUTTON DETECTOR
- CONCRETE PULL BOX TYPE 1
- DOUBLE CONCRETE PULL BOX TYPE A, TYPE 1 DRAIN
- DETECTION ZONE
- CONDUIT MEDIAN
- CONDUIT PUSHED
- CONDUIT BRIDGE
- CONDUIT EXISTING
- CONDUIT TRENCHED
- SPAN WIRE
- MAST ARM WITH SIGNAL HEADS
- TYPE A BASE
- TYPE F BASE
- TYPE C BASE
- CCTV CAMERA

SIGNAL HEAD LEGEND

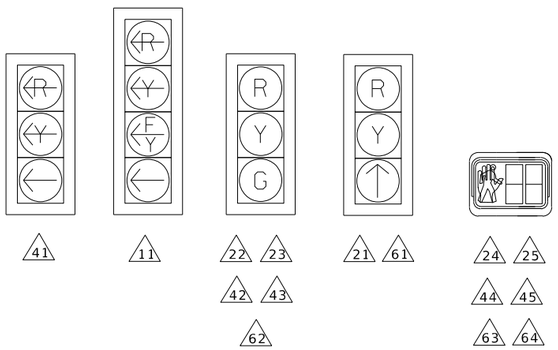

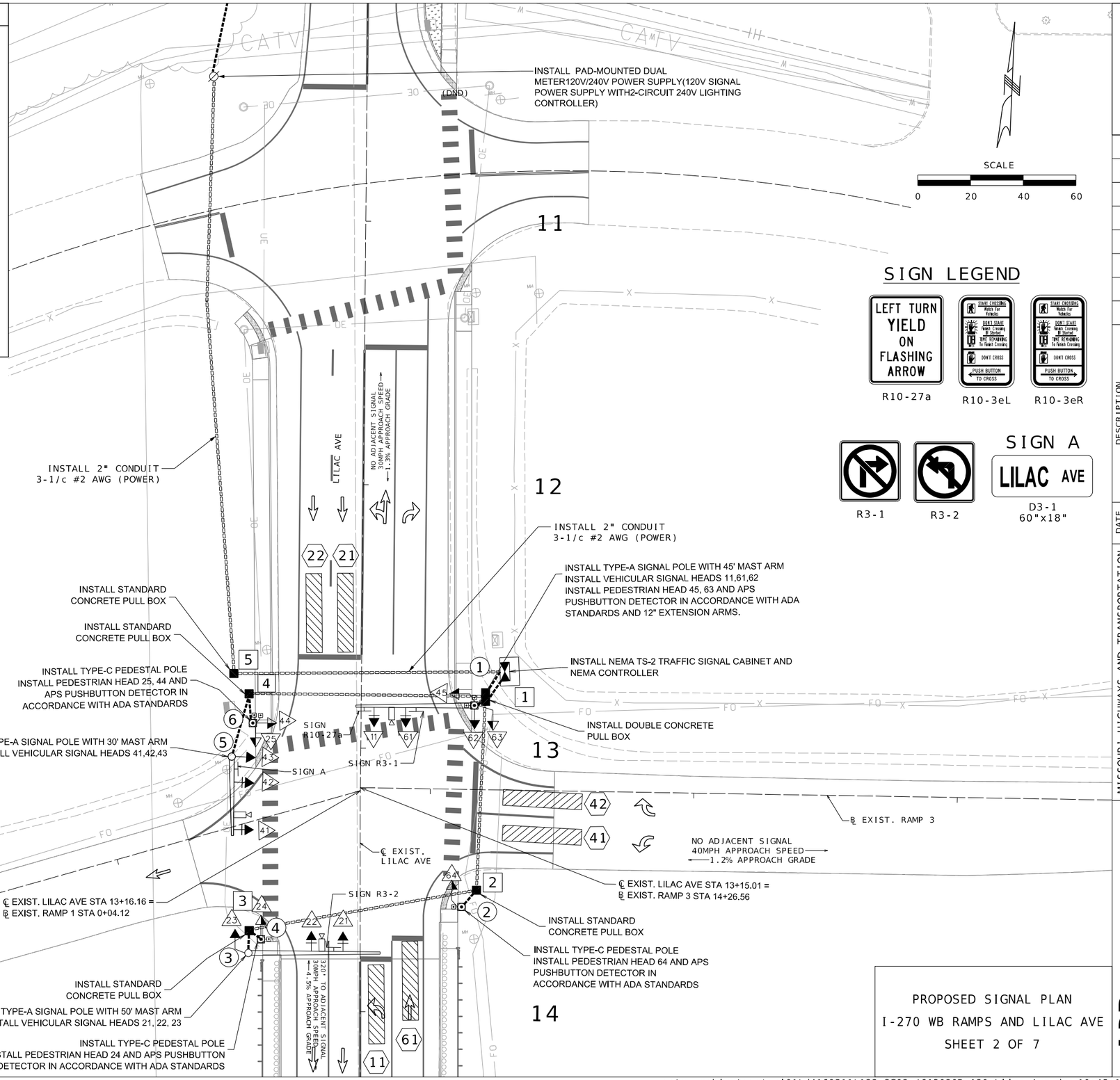

SIGN LEGEND

PROPOSED SIGNAL PLAN
I-270 WB RAMPS AND LILAC AVE
SHEET 2 OF 7

THIS SHEET HAS BEEN SIGNED, SEALED, AND DATED ELECTRONICALLY
JASON LEE HAYNES
NUMBER PE-2004017183
PROFESSIONAL ENGINEER
STATE OF MISSOURI

DATE PREPARED 3/25/2026
ROUTE I-270 | STATE MO
DISTRICT SL | SHEET NO. 122
COUNTY ST. LOUIS
JOB NO. J6I3020D
CONTRACT ID.
PROJECT NO.
BRIDGE NO.

DESCRIPTION | DATE

IF A SEAL IS PRESENT ON THIS SHEET IT HAS BEEN ELECTRONICALLY SEALED AND DATED.

MISSOURI HIGHWAYS AND TRANSPORTATION COMMISSION
105 WEST CAPITOL
JEFFERSON CITY, MO 65102
1-888-ASK-MODOT (1-888-275-6636)

HDR Engineering, Inc.
1001 Highlands Plaza Drive
Suite 200
St. Louis, MO 63110-1337
314-425-8300
Certificate of Authority: 000856

c:\pwworking\central01\d4169511\122_SG02_J6I3020D_I20_Lilac_Ave.dgn 10:45:10 AM 3/25/2026

EFFECTIVE: 07-01-2018

| POST NUMBER | PULL BOX NUMBER | LOCATION APPROACH | LOCATION STATION | LOCATION OFFSET | BASE A 9 | BASE A 9.5 | BASE A 10 | BASE A 10.5 | BASE A 11 | BASE A 12 | BASE F 9 | BASE F 9.5 | BASE F 10 | BASE F 10.5 | BASE F 11 | BASE F 12 | BASE C | BASE CONCRETE** (CU. YDS.) | PULL BOX PREFORMED CLASS 1 | PREFORMED CLASS 2 | PREFORMED CLASS 3 | PREFORMED CLASS 5 | CONCRETE STANDARD | CONCRETE DOUBLE, TYPE A | CONCRETE DOUBLE, TYPE B | DRAIN TYPE* I | DRAIN TYPE* II A | DRAIN TYPE* II B | DRAIN TYPE* II C | POST TOP MOUNT POST 8 FT. | POST TOP MOUNT POST 15 FT. | TYPE C & CL ARM LENGTH A | ARM LENGTH A | ARM LENGTH A | ARM LENGTH A | TYPE C & CL SIGNAL SPACING B | SIGNAL SPACING C | SIGNAL SPACING D | SIGNAL SPACING D' | TYPE C & CL SIGN SPACING B | SIGN SPACING C | SIGN SPACING D | SIGN SPACING D' | TYPE B & BL ARM LENGTH E | E | K | E | K | E | K | LEFT ARM E SIGNAL SPACING F | G | H | H' | LEFT ARM E SIGN SPACING F | G | H | H' | RIGHT ARM K SIGNAL SPACING L | M | N | N' | RIGHT ARM K SIGN SPACING L | M | N | N' | INCLUDED ANGLE | LUMINAIRE BRACKET ARM* 4 FT. | 6 FT. | 8 FT. | 10 FT. | 12 FT. | 15 FT. |
|---|---|---

EFFECTIVE: 10-01-2015

CONDUIT (WITH #14 TRACER WIRE)

FROM	TO	CENTER TO CENTER DISTANCE	LOOP DET.	TRENCH			PUSHED			MEDIAN			ON STRUCTURE			REMARKS
			1"	2"	3"	4"	2"	3"	4"	2"	3"	4"	2"	3"		
P.S.	∅	38		42												
∅	5	227					230									
5	✉	105					108									
✉	1	12				30										2 RUNS
1	①	5			8											
1	2	74							72							
2	②	9			10											
2	3	88							86							
3	③	9			12											
3	④	5			6											
1	4	90							88							
4	⑤	25			28											
4	⑥	11			12											
SUBTOTALS				42	76	30		338		246						
TOTALS				42	76	30		338		246						

CABLE

FROM	TO	CENTER TO CENTER DISTANCE	POWER		CONTROL				CLOSED LOOP INTERCONNECT	LUMINAIRE		VIDEO DETECTOR CABLE	CCTV CAMERA	FIBER		REMARKS
				1c #2	2c #16	5c #16	7c #16	3c #16	3 PAIR #16	CONTROL 2c #12	POLE & BRACKET 1c #10		CAT5E	SINGLE-MODE	MULTI-MODE	
P.S.	∅	38		*243												*FOR INFORMATION ONLY
∅	5	227		714												
5	✉	105		348												
✉	1	12			138	138	184					69				
1	①	5			16	16	24					8				
①	11						59									
①	61						47									
①	62						13									
①	45					10										
①	63					10										
①	44				9											
①	64				9											
①	▭											53				
1	2	74			160	160	160					80				
2	②	9			12	12										
②	64					10										
②	63				9											
2	3	88			94	94	188					94				
3	③	9					24					12				
③	22						45									
22	21						12									
③	23						13									
③	▭											51				
3	④	5			8	8										
④	24					10										
④	25				9											
1	4	90			192	192	288					96				
4	⑤	25					84					28				
⑤	41						49									
⑤	42						31									
⑤	43						13									
⑤	▭											43				
4	⑥	11			28	28										
⑥	25					10										
⑥	44					10										
⑥	24				9											
⑥	45				9											
SUBTOTALS				1062	702	708	1234					534				
TOTALS				1120	740	750	1300					570				

WIRE TOTALS INCLUDES 5% FOR SNAKING AND CUTTING

INTERSECTION I-270 WB RAMPS AND LILAC AVE

D-37B

STATE OF MISSOURI
JASON LEE HAYNES
NUMBER PE-2004017183
PROFESSIONAL ENGINEER

THIS SHEET HAS BEEN SIGNED, SEALED, AND DATED ELECTRONICALLY

DATE PREPARED 3/25/2026

ROUTE	STATE
I-270	MO
DISTRICT	SHEET NO.
SL	124

COUNTY ST. LOUIS

JOB NO. J6I3020D

CONTRACT ID.

PROJECT NO.

BRIDGE NO.

DESCRIPTION

DATE

MISSOURI HIGHWAYS AND TRANSPORTATION COMMISSION

105 WEST CAPITOL
JEFFERSON CITY, MO 65102
1-888-ASK-MODOT (1-888-275-6636)

HDR Engineering, Inc.
1001 Highlands Plaza Drive
Suite 200
St. Louis, MO 63110-1337
314-425-8300
Certificate of Authority: 000856

IF A SEAL IS PRESENT ON THIS SHEET IT HAS BEEN ELECTRONICALLY SEALED AND DATED.

EFFECTIVE: 04-01-2018

POWER SUPPLY

LOCATION			POWER SUPPLY ASSEMBLY		CIRCUIT BREAKER TRIP RATING*				LIGHTING CONTROL * (ON POWER SUPPLY)		SERVICE POLE	
					CONTROLLER		POWER SUPPLY DISCONNECT					
							MAIN BREAKER					
APPROACH	STATION	OFFSET	DRAWING 902.15	DRAWING	AUXILIARY BREAKER	CONT & SIGNAL LAMPS	SIGNALS	LIGHTING	120 VOLT CONTROL CABINET	MAIN BREAKER	CONTRACT FURNISH	UTILITY COMPANY
LILAC	10+45	58'RT	Type 2		15 Amps	40 Amps	40 Amps	Amps		Amps	Cl. Ft.	
			Type		15 Amps	Amps	Amps	Amps		Amps	Cl. Ft.	

CONTROLLER ASSEMBLY AND AUXILIARY EQUIPMENT

LOCATION			SYSTEM MASTER (CLOSED LOOP)		ACTUATED		ON-OFF* SWITCH TYPE		COORDINATION INTERFACE *					TIME * CLOCK	NEMA CABINET TYPE *			170 CABINET TYPE *		170 SOFTWARE *	
									12C/7C HARDWIRE (1)		TIME BASE	CLOSED LOOP		FIBER							
APPROACH	STATION	OFFSET	NEMA	170	NEMA	170	I	II	MASTER	LOCAL		NEMA	170			E	EV	DOUBLE	332	336S	BITRAN	WAPITI
LILAC	12+70	54'LT			1		1									1						

NEMA DETECTOR ASSIGNMENT

		CARD POSITION							
		1	2	3	4	5	6	7	8
CHANNEL	1	11	21 22 23		41 42 43				
	2		61 62						

NOTE: LAND 2C DETECTOR WIRES ON DETECTOR PANEL IN CABINET
TOTAL NUMBER OF DETECTOR CARDS(2-CHANNEL) = 3 (2)

DETECTOR SCHEDULE

DETECTOR NUMBER	APPROACH	TYPE				
		PUSH BUTTON	INDUCTION LOOP (2)			SL DETECTION(3)
			STANDARD	DELAY/ EXTEND *	CALL UNIT *	
24	WEST CROSSWALK	1				
25	WEST CROSSWALK	1				
44	NORTH CROSSWALK	1				
45	NORTH CROSSWALK	1				
63	EAST CROSSWALK	1				
64	EAST CROSSWALK	1				
11	LILAC NB					6'X30' ZONE
61	LILAC NB					6'X30' ZONE
21	LILAC SB					6'X30' ZONE
22	LILAC SB					6'X30' ZONE
41	RAMP 3 WB					6'X30' ZONE
42	RAMP 3 WB					6'X30' ZONE
TOTAL		6				

* ITEMS FOR WHICH SEPARATE PAYMENT WILL NOT BE MADE.

*** USE D3-1 FOR ONE LINE. USE D3-1B FOR TWO LINE.

(1) MoDOT "D" PLUG SHALL BE WIRED INTO ALL NEMA CONTROLLERS WITH 7C HARDWIRE INTERCONNECT.

(2) PAYMENT IS MADE FOR THE NUMBER OF 2-CHANNEL DETECTOR CARDS AS SHOWN BELOW THE ASSIGNMENT CHART.

(3) VIDEO DETECTORS ARE DEFINED IN JSP AS SL DISTRICT TRAFFIC SIGNAL DETECTION SYSTEM

SIGNAL SIGNS

QUANTITY	MUTCD SIGN NUMBER	SIZE	AREA	SIGN TOTAL AREA ITEM NO. 90208.33	SIGNAL SIGN MOUNTING HARDWARE ITEM NO. 90208.34
		INCHES	SQ.FT.	SQ.FT.	EA.
	R10-10L	24 X 30	5.0		
	R10-10R	24 X 30	5.0		
	R3-5L	30 X 36	7.5		
	R3-5R	30 X 36	7.5		
	R3-5A	30 X 36	7.5		
	R3-6L	30 X 36	7.5		
	R3-6R	30 X 36	7.5		
1	R3-2	36 X 36	9.0	9.0	1
1	R3-1	36 X 36	9.0	9.0	1
	R3-3	24 X 24	4.0		
6	R10-3E	9 X 15	0.9	5.4	**
	R10-11A	24 X 30	5.0		
	R10-13	36 X 24	6.0		
1	R10-27A	30 X 36	7.5	7.5	1
1	D3-1 ***	60 X 18	7.5	7.5	2
			SUBTOTAL	38.4	5
			TOTAL	39	5

**PUSHBUTTON SIGNS & MOUNTING HARDWARE INCLUDED IN 9024920 BID ITEM FOR PUSHBUTTONS

NEMA LOAD SWITCH ASSIGNMENTS

1	2	3	4	5	6	7	8	9	10	11	12	13	14	15	16
∅1 NBL	∅2 SBT		∅4 WBL		∅6 NBT			OLA NBL				∅2 PED	∅4 PED	∅6 PED	

NOTE: RUN FYA PHASE 1 OFF OF AMBER OUTPUT ON LOAD SWITCH 9.
TOTAL NUMBER OF LOAD SWITCHES = 8

I-270 WB RAMPS AND LILAC AVE
INTERSECTION

D-37C

STATE OF MISSOURI
JASON LEE HAYNES
NUMBER PE-2004017183
PROFESSIONAL ENGINEER
THIS SHEET HAS BEEN SIGNED, SEALED, AND DATED ELECTRONICALLY

DATE PREPARED 3/25/2026
ROUTE I-270 | STATE MO
DISTRICT SL | SHEET NO. 125
COUNTY ST. LOUIS
JOB NO. J6I3020D
CONTRACT ID.
PROJECT NO.
BRIDGE NO.

DESCRIPTION | DATE

MISSOURI HIGHWAYS AND TRANSPORTATION COMMISSION
105 WEST CAPITOL
JEFFERSON CITY, MO 65102
1-888-ASK-MODOT (1-888-275-6636)

HDR Engineering, Inc.
1001 Highlands Plaza Drive
Suite 200
St. Louis, MO 63110-1337
314-425-8300
Certificate of Authority: 000856

IF A SEAL IS PRESENT ON THIS SHEET IT HAS BEEN ELECTRONICALLY SEALED AND DATED.

EFFECTIVE: 12-01-2017

WIRING DIAGRAM

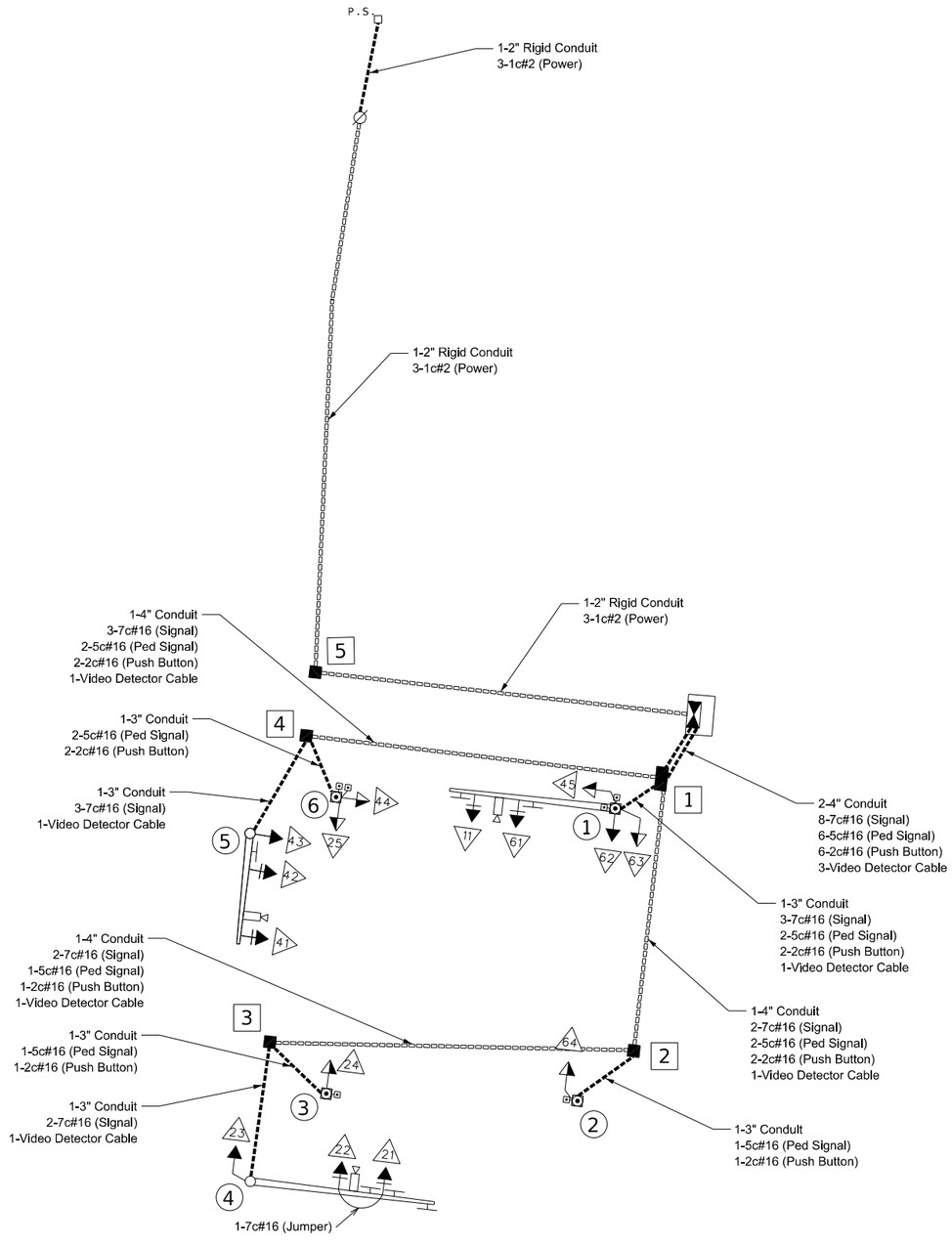

LEGEND

3"	CONDUIT CONTAINING CABLE WITH SIZE
	CABLE
X-Xc	MULTI-CONDUCTOR CABLE #16 AWG (UNLESS OTHERWISE INDICATED)
LIC	#14 AWG DETECTOR LEAD-IN CABLE (2C TWISTED SHIELDED)
X	PULL BOX WITH NUMBER
X	POST WITH NUMBER
X	POST WITH MAST ARM
X	POST WITH MAST ARM AND LUMINAIRE
X	DETECTOR WITH NUMBER
X	SIGNAL HEAD WITH NUMBER
	SIGNAL CONTROLLER
	POWER SUPPLY
	LIGHTING CONTROLLER

I-270 WB RAMPS AND LILAC AVE

INTERSECTION

D-37D

STATE OF MISSOURI
JASON LEE HAYNES
NUMBER PE-2004017183
PROFESSIONAL ENGINEER
THIS SHEET HAS BEEN SIGNED, SEALED, AND DATED ELECTRONICALLY

DATE PREPARED 3/25/2026

ROUTE	STATE
I-270	MO
DISTRICT	SHEET NO.
SL	126

COUNTY: ST. LOUIS
JOB NO.: J6I3020D
CONTRACT ID.:
PROJECT NO.:
BRIDGE NO.:

DESCRIPTION	DATE

IF A SEAL IS PRESENT ON THIS SHEET IT HAS BEEN ELECTRONICALLY SEALED AND DATED.

MISSOURI HIGHWAYS AND TRANSPORTATION COMMISSION
105 WEST CAPITOL
JEFFERSON CITY, MO 65102
1-888-ASK-MODOT (1-888-275-6636)

HDR Engineering, Inc.
1001 Highlands Plaza Drive
Suite 200
St. Louis, MO 63110-1337
314-425-8300
Certificate of Authority: 000856

EFFECTIVE: 12-01-2017

TRAFFIC PHASING AND COLOR SEQUENCE - ACTUATED CONTROLLERS

		PHASE 1	PHASE 2	PHASE 3	PHASE 4	PHASE 5	PHASE 6	PHASE 7	PHASE 8	PED Ø2 OVERLAP	PED Ø4 OVERLAP	PED Ø6 OVERLAP	PED Ø8 OVERLAP	OVERLAP A	
FACE NUMBERS		11	21 22 23		41 42 43		61 62			24 25	44 45	63 64		11	FACE NUMBERS
SIGNAL INDICATIONS	R		R R		RL R		R R			DW DW	DW DW	DW DW		RL	R
	Y		Y Y		YL Y		Y Y							YL	Y
	FYA									FDW FDW	FDW FDW	FDW FDW		FYL	FYA
	G		S G		G		S G			W W	W W	W W			G
	L				L										
DETECTOR ASSIGNMENTS															DETECTOR ASSIGNMENTS
DETECTOR ASSIGNMENTS (PEDS. ONLY)															
OVERLAP PARENT PHASES														2	

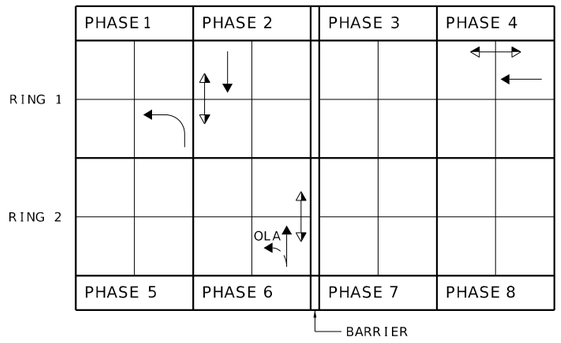

RING STRUCTURE

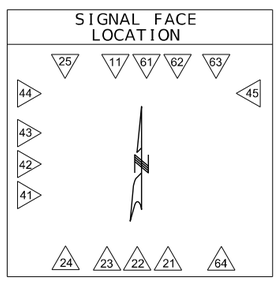

RING AND BARRIER DIAGRAM

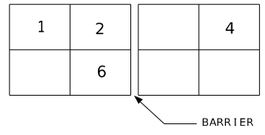

IF CALLED, ALL NON-CONFLICTING PHASES SHALL COMBINE AND TIME CONCURRENTLY. TIME TO BE DETERMINED BY THE ENGINEER AT SIGNAL TURN ON AND SET IN THE CONTROLLER BY THE CONTRACTOR.

LEGEND

- ACTUATED VEHICULAR MOVEMENT
- PARTIALLY RESTRICTED ACTUATED VEHICULAR MOVEMENT
- NON-ACTUATED VEHICULAR MOVEMENT
- PARTIALLY RESTRICTED NON-ACTUATED VEHICULAR MOVEMENT
- ACTUATED PEDESTRIAN MOVEMENT
- NON-ACTUATED PEDESTRIAN MOVEMENT
- VEHICLE STOPPED

FDW — FLASHING DON'T WALK
W — WALK
DW — DON'T WALK
R/W — RIGHT OF WAY INTERVAL
YRt — YELLOW RIGHT ARROW
RT. — GREEN RIGHT ARROW
LY -YL — YELLOW LEFT ARROW
L — GREEN LEFT ARROW
S — GREEN STRAIGHT AHEAD ARROW
G — CIRCULAR GREEN
Y — CIRCULAR YELLOW
R — CIRCULAR RED
RL — RED LEFT ARROW
Ø — TRAFFIC PHASE
AO — ALL OTHERS
FR — FLASHING RED
FY — FLASHING CIRCULAR YELLOW
FYL — FLASHING YELLOW LEFT ARROW

FLASHING OPERATION	
ALL	FR

CONTROLLER TYPE	NEMA

TRAFFIC SIGNAL CONTROL OPERATION

INTERSECTION OF

I-270 WB RAMPS WITH LILAC AVE

D-38A

STATE OF MISSOURI
JASON LEE HAYNES
NUMBER PE-2004017183
PROFESSIONAL ENGINEER
THIS SHEET HAS BEEN SIGNED, SEALED, AND DATED ELECTRONICALLY

DATE PREPARED 3/25/2026
ROUTE I-270 | STATE MO
DISTRICT SL | SHEET NO. 127
COUNTY ST. LOUIS
JOB NO. J6I3020D
CONTRACT ID.
PROJECT NO.
BRIDGE NO.

DESCRIPTION
DATE

IF A SEAL IS PRESENT ON THIS SHEET IT HAS BEEN ELECTRONICALLY SEALED AND DATED.

MISSOURI HIGHWAYS AND TRANSPORTATION COMMISSION
105 WEST CAPITOL
JEFFERSON CITY, MO 65102
1-888-ASK-MODOT (1-888-275-6636)

HDR Engineering, Inc.
1001 Highlands Plaza Drive
Suite 200
St. Louis, MO 63110-1337
314-425-8300
Certificate of Authority: 000856

SIGNAL LEGEND

- EX. CONDUIT
- EX. PEDESTRIAN SIGNAL HEAD
- EX. TRAFFIC SIGNAL HEAD
- EXISTING SIGNAL POLE MOUNTED LUMINAIRE
- EX. PUSHBUTTON DETECTOR (PB)
- EX. POWER SUPPLY
- EX. PULL BOX
- EX. POST & MAST ARM
- EX. CONTROLLER CABINET AND BASE
- EX. VIDEO DETECTION CAMERA
- EX. PREMPTION DETECTOR
- EX. DETECTION ZONE
- EX. PULL BOX IDENTIFIER
- EX. SIGNAL POLE IDENTIFIER
- EX. SIGNAL/PED. HEAD IDENTIFIER
- EX. PED. PUSHBUTTON IDENTIFIER

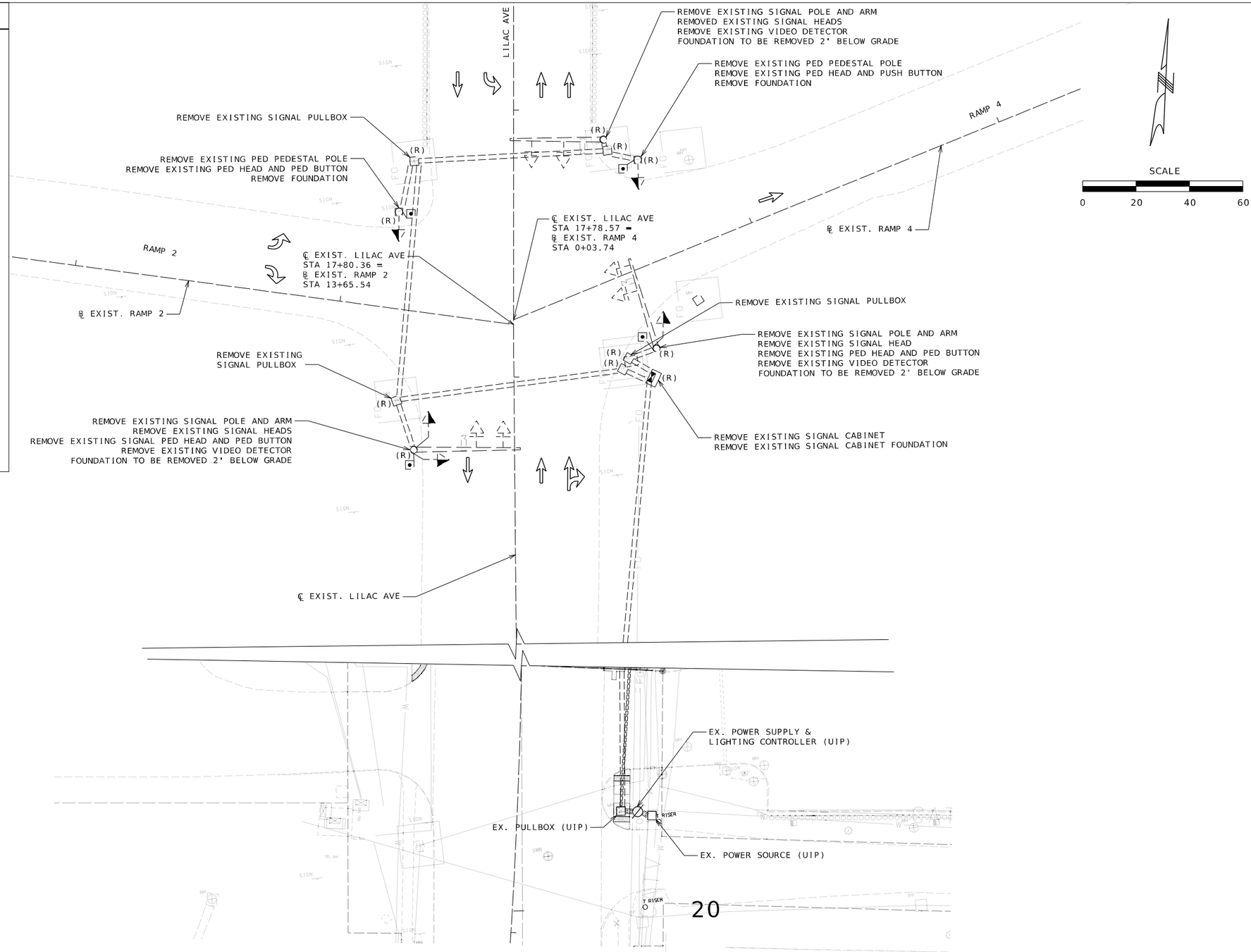

EXISTING SIGNAL PLAN
I-270 EB RAMPS AND LILAC AVE
SHEET 1 OF 7

STATE OF MISSOURI
JASON LEE HAYNES
NUMBER PE-2004017183
PROFESSIONAL ENGINEER
THIS SHEET HAS BEEN SIGNED, SEALED, AND DATED ELECTRONICALLY

DATE PREPARED 3/25/2026
ROUTE I-270 | STATE MO
DISTRICT SL | SHEET NO. 128
COUNTY ST. LOUIS
JOB NO. J6I3020D
CONTRACT ID.
PROJECT NO.
BRIDGE NO.

IF A SEAL IS PRESENT ON THIS SHEET IT HAS BEEN ELECTRONICALLY SEALED AND DATED.

DESCRIPTION | DATE

MISSOURI HIGHWAYS AND TRANSPORTATION COMMISSION
105 WEST CAPITOL
JEFFERSON CITY, MO 65102
1-888-ASK-MODOT (1-888-275-6636)

HDR Engineering, Inc.
1001 Highlands Plaza Drive
Suite 200
St. Louis, MO 63110-1337
314-425-8300
Certificate of Authority: 000856

TRAFFIC SIGNALS LEGEND

- CONTROLLER WITH PAD
- CONTROLLER (EXISTING)
- JUNCTION BOX
- POWER SOURCE
- POWER SUPPLY
- SIGNAL HEAD (PEDESTRIAN)
- SIGNAL HEAD (STANDARD)
- VIDEO DETECTOR
- PUSH BUTTON DETECTOR
- CONCRETE PULL BOX TYPE 1
- DOUBLE CONCRETE PULL BOX TYPE A, TYPE 1 DRAIN
- DETECTION ZONE
- CONDUIT MEDIAN
- CONDUIT PUSHED
- CONDUIT BRIDGE
- CONDUIT EXISTING
- CONDUIT TRENCHED
- SPAN WIRE
- MAST ARM WITH SIGNAL HEADS
- TYPE A BASE
- TYPE F BASE
- TYPE C BASE
- CCTV CAMERA

SIGNAL HEAD LEGEND

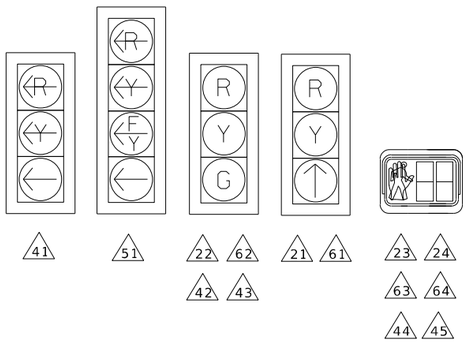

SIGN LEGEND

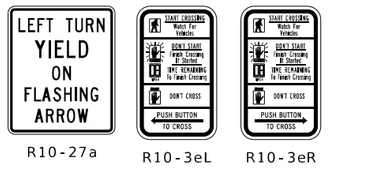

R10-27a R10-3eL R10-3eR

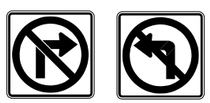

R3-1 R3-2

SIGN A



D3-1
60"x18"

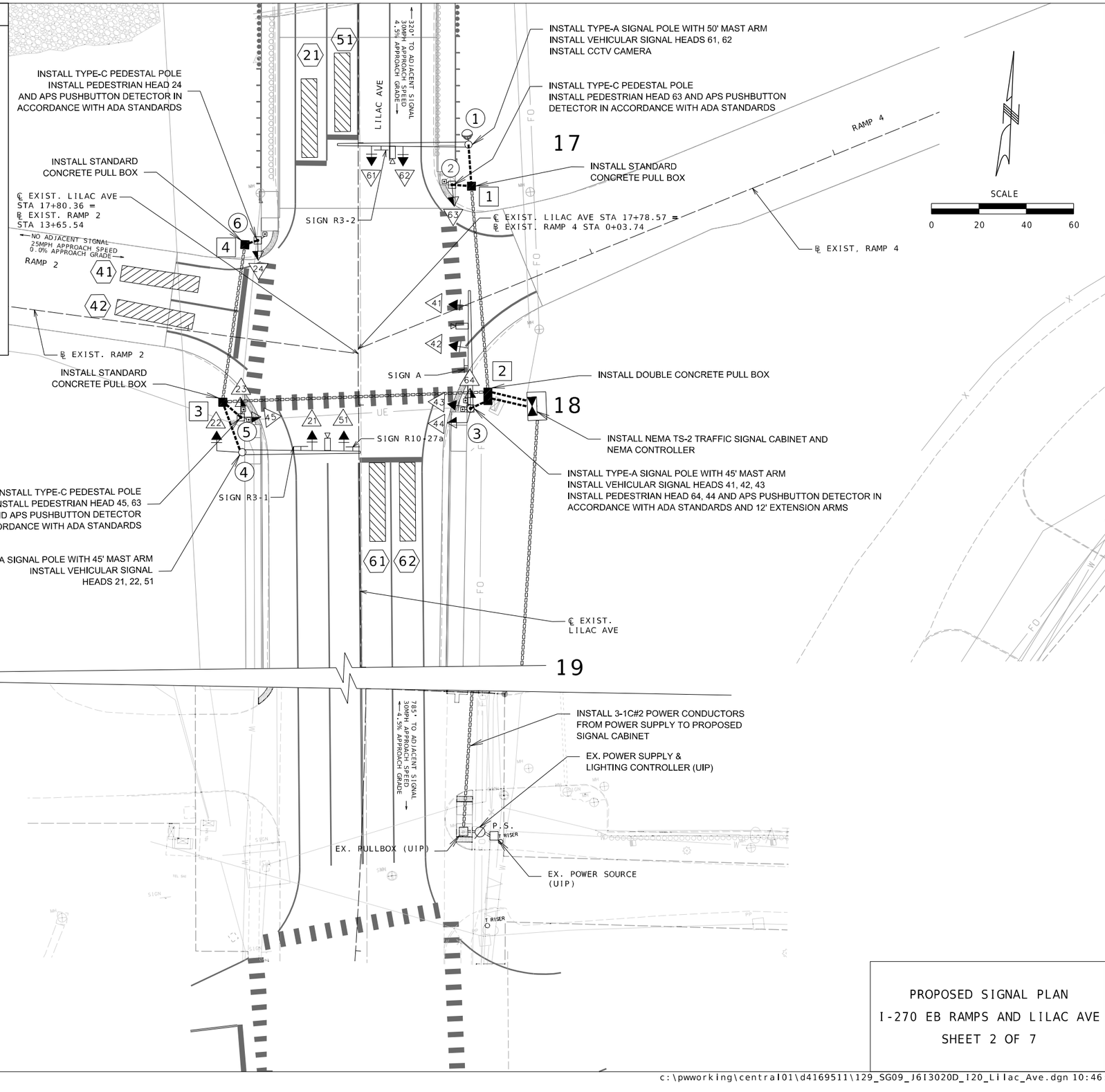

PROPOSED SIGNAL PLAN
I-270 EB RAMPS AND LILAC AVE
SHEET 2 OF 7

JASON LEE HAYNES
NUMBER PE-2004017183
PROFESSIONAL ENGINEER
STATE OF MISSOURI
THIS SHEET HAS BEEN SIGNED, SEALED, AND DATED ELECTRONICALLY

DATE PREPARED 3/25/2026
ROUTE I-270 | STATE MO
DISTRICT SL | SHEET NO. 129
COUNTY ST. LOUIS
JOB NO. J6I3020D
CONTRACT ID.
PROJECT NO.
BRIDGE NO.

DESCRIPTION	DATE

IF A SEAL IS PRESENT ON THIS SHEET IT HAS BEEN ELECTRONICALLY SEALED AND DATED.

MISSOURI HIGHWAYS AND TRANSPORTATION COMMISSION
105 WEST CAPITOL
JEFFERSON CITY, MO 65102
1-888-ASK-MODOT (1-888-275-6636)

HDR Engineering, Inc.
1001 Highlands Plaza Drive
Suite 200
St. Louis, MO 63110-1337
314-425-8300
Certificate of Authority: 000856

c:\pwworking\central01\d4169511\129_SG09_J6I3020D_I20_Lilac_Ave.dgn 10:46:06 AM 3/25/2026

EFFECTIVE: 07-01-2018

POST NUMBER	PULL BOX NUMBER	LOCATION: APPROACH	LOCATION: STATION	LOCATION: OFFSET	BASE: A: 9	A: 9.5	A: 10	A: 10.5	A: 11	A: 12	F: 9	F: 9.5	F: 10	F: 10.5	F: 11	F: 12	C	CONCRETE** (CU. YDS.)	PULL BOX: PREFORMED: CLASS 1	CLASS 2	CLASS 3	CLASS 5	CONCRETE: STANDARD	DOUBLE, TYPE A	DOUBLE, TYPE B	DRAIN TYPE*: I	II: A	B	C
B		LILAC AVE	18+01	66' LT														1.31											
1		LILAC AVE	17+00	42' LT				1										3.27											
2		LILAC AVE	17+16	36' LT													1	0.44											
3		LILAC AVE	18+02	43' LT				1										3.27											
4		LILAC AVE	18+18	44' RT				1										3.27											
5		LILAC AVE	18+04	45' RT													1	0.44											
6		LILAC AVE	17+37	38' RT													1	0.44											
	1	LILAC AVE	17+16	43' LT																			1			1			
	2	LILAC AVE	17+97	49' LT																				1		1			
	3	LILAC AVE	17+99	52' RT																			1			1			
	4	LILAC AVE	17+39	43' RT																			1			1			
SUBTOTAL																		12.44					3	1				
TOTAL																		12.44					3	1				

POST: TOP MOUNT POST: 8 FT.	15 FT.	TYPE C & CL: ARM LENGTH: A	A	A	A	SIGNAL SPACING: B	C	D	D'	SIGN SPACING: B	C	D	D'	TYPE B & BL: ARM LENGTH: E	K	E	K	E	K	LEFT ARM E: SIGNAL SPACING: F	G	H	H'	SIGN SPACING: F	G	H	H'	RIGHT ARM K: SIGNAL SPACING: L	M	N	N'	SIGN SPACING: L	M	N	N'	INCLUDED ANGLE	LUMINAIRE BRACKET ARM*: 4 FT.	6 FT.	8 FT.	10 FT.	12 FT.	15 FT.
			50			25	12			32																													
1																																									
		45				23	16			16																															
		45				26	12			21	21																														
1																																									
1																																									
3			2	1																																				
3			2	1																																				

SIGNAL HEADS

| SPAN NUMBER | POST NUMBER | FACE NUMBER | LUMINAIRE 150W SODIUM | INDICATIONS *: 12" LENS CONVENTIONAL: R | Y | RL | YL | FYL | FYR | G | S | L | Rt | 12" LENS OPTICAL LIMITING: R | Y | YL | YRt | YL | YRt | G | S | L | Rt | VISORS *: 12" LENS | PED. | LOUVERS *: A | B | C | D | E | F | BACKPLATE*: LENSES: 1 | 2 | 3 | 4 | 5 | RETROREFLECTIVE BACKPLATE*: LENSES: 1 | 2 | 3 | 4 | 5 | BRACKET*: TYPE: I | II | III | ONE-FACE SECTION: 1-: T | S | C | B | 3-: T | S | C | B | 4-: T | S | C | B | 5-: T | S | C | B | TWO-FACE SECTIONS: 11-: T | S | B | 33-: T | S | C | B | 34-: S | B | 35-: S | B | 44-: S | B | 45-: S | B |
|---|---|---|---|---|---|---|---|---|---|---|---|---|---|---|---|---|---|---

EFFECTIVE: 10-01-2015

CONDUIT (WITH #14 TRACER WIRE)

FROM	TO	CENTER TO CENTER DISTANCE	LOOP DET.	TRENCH			PUSHED			MEDIAN			ON STRUCTURE			REMARKS
			1"	2"	3"	4"	2"	3"	4"	2"	3"	4"	2"	3"		
P.S.	∅	6		10												
∅	EX	7		11												
EX	⊠	455					458									
⊠	2	18				42										2 RUNS
2	3	8			11											
2	1	80							78							
1	2	8			9											
1	1	16			19											
2	3	102							100							
3	4	21			24											
3	5	9			10											
3	4	61							59							
4	6	5			6											
SUBTOTALS				21	79	42		458		237						
TOTALS				21	79	42		458		237						

CABLE

FROM	TO	CENTER TO CENTER DISTANCE	POWER		CONTROL				CLOSED LOOP INTERCONNECT	LUMINAIRE		VIDEO DETECTOR CABLE	CCTV CAMERA	FIBER		REMARKS
				1c #2	2c #16	5c #16	7c #16	3c #16	3 PAIR #16	CONTROL 2c #12	POLE & BRACKET 1c #10		CAT5E	SINGLE-MODE	MULTI-MODE	
P.S.	∅	6		*147												*FOR INFORMATION ONLY
∅	EX	7		54												
EX	⊠	455		1398												
⊠	2	18			174	174	203					87	29			
2	3	8			22	22	33					11				
3	△81						60									
3	△82						44									
3	△83						13									
3	△64					10										
3	△84					10										
3	⬡63				9											
3	⬡85				9											
3	▭											52				
2	1	80			86	86	86					86	86			
1	1	16					19					19	19			
1	△62						46									
△62	△61						12									
1	▭											51				
1	⬭												30			
1	2	8			11	11										
2	△63					10										
2	⬡64				9											
2	3	102			324	324	324					108				
3	4	21					72					24				
4	△51						59									
4	△21						47									
4	△22						13									
4	▭											54				
3	5	9			24	24										
5	△23					10										
5	△85					10										
5	⬡24				9											
5	⬡84				9											
3	4	61			67	67										
4	6	5			8	8										
6	△24					10										
6	⬡23				9											
SUBTOTALS				1452	770	776	1031					492	164			
TOTALS				1530	810	820	1090					520	180			

WIRE TOTALS INCLUDES 5% FOR SNAKING AND CUTTING

INTERSECTION I-270 EB RAMPS AND LILAC AVE

D-37B

STATE OF MISSOURI
JASON LEE HAYNES
NUMBER PE-2004017183
PROFESSIONAL ENGINEER

THIS SHEET HAS BEEN SIGNED, SEALED, AND DATED ELECTRONICALLY

DATE PREPARED 3/25/2026

ROUTE	STATE
I-270	MO

DISTRICT	SHEET NO.
SL	131

COUNTY ST. LOUIS

JOB NO. J6I3020D

CONTRACT ID.

PROJECT NO.

BRIDGE NO.

DESCRIPTION | DATE

MISSOURI HIGHWAYS AND TRANSPORTATION COMMISSION
105 WEST CAPITOL
JEFFERSON CITY, MO 65102
1-888-ASK-MODOT (1-888-275-6636)

HDR Engineering, Inc.
1001 Highlands Plaza Drive
Suite 200
St. Louis, MO 63110-1337
314-425-8300
Certificate of Authority: 000856

IF A SEAL IS PRESENT ON THIS SHEET IT HAS BEEN ELECTRONICALLY SEALED AND DATED.

EFFECTIVE: 04-01-2018

POWER SUPPLY

LOCATION			POWER SUPPLY ASSEMBLY		CIRCUIT BREAKER TRIP RATING*				LIGHTING CONTROL * (ON POWER SUPPLY)		SERVICE POLE	
					CONTROLLER		POWER SUPPLY DISCONNECT					
APPROACH	STATION	OFFSET	DRAWING 902.15	DRAWING	AUXILIARY BREAKER	CONT & SIGNAL LAMPS	MAIN BREAKER		120 VOLT CONTROL CABINET	MAIN BREAKER	CONTRACT FURNISH	UTILITY COMPANY
							SIGNALS	LIGHTING				
LILAC	19+63	45'LT	Type 2		15 Amps	40 Amps	40 Amps	Amps		Amps	Cl. Ft.	
			Type		15 Amps	Amps	Amps	Amps		Amps	Cl. Ft.	

CONTROLLER ASSEMBLY AND AUXILIARY EQUIPMENT

LOCATION			SYSTEM MASTER (CLOSED LOOP)		ACTUATED		ON-OFF* SWITCH TYPE		COORDINATION INTERFACE *						TIME * CLOCK	NEMA CABINET TYPE *			170 CABINET TYPE *		170 SOFTWARE *	
									12C/7C HARDWIRE (1)		TIME BASE	CLOSED LOOP		FIBER								
APPROACH	STATION	OFFSET	NEMA	170	NEMA	170	I	II	MASTER	LOCAL		NEMA	170			E	EV	DOUBLE	332	336S	BITRAN	WAPITI
LILAC	18+01	66'LT			1		1									1						

NEMA DETECTOR ASSIGNMENT

		CARD POSITION							
		1	2	3	4	5	6	7	8
CHANNEL	1		21 22						
	2	51	61 62		41 42 43				

NOTE: LAND 2C DETECTOR WIRES ON DETECTOR PANEL IN CABINET
TOTAL NUMBER OF DETECTOR CARDS(2-CHANNEL) = 3 (2)

DETECTOR SCHEDULE

DETECTOR NUMBER	APPROACH	TYPE				
		PUSH BUTTON	INDUCTION LOOP (2)			SL DETECTION(3)
			STANDARD	DELAY/ EXTEND *	CALL UNIT *	
23	WEST CROSSWALK	1				
24	WEST CROSSWALK	1				
84	SOUTH CROSSWALK	1				
85	SOUTH CROSSWALK	1				
63	EAST CROSSWALK	1				
64	EAST CROSSWALK	1				
61	LILAC NB					6'X30' ZONE
62	LILAC NB					6'X30' ZONE
21	LILAC SB					6'X30' ZONE
51	LILAC SB					6'X30' ZONE
81	RAMP 3 EB					6'X30' ZONE
82	RAMP 3 EB					6'X30' ZONE
TOTAL		6				

* ITEMS FOR WHICH SEPARATE PAYMENT WILL NOT BE MADE.

*** USE D3-1 FOR ONE LINE. USE D3-1B FOR TWO LINE.

(1) MoDOT "D" PLUG SHALL BE WIRED INTO ALL NEMA CONTROLLERS WITH 7C HARDWIRE INTERCONNECT.

(2) PAYMENT IS MADE FOR THE NUMBER OF 2-CHANNEL DETECTOR CARDS AS SHOWN BELOW THE ASSIGNMENT CHART.

(3) VIDEO DETECTORS ARE DEFINED IN JSP AS SL DISTRICT TRAFFIC SIGNAL DETECTION SYSTEM

SIGNAL SIGNS

QUANTITY	MUTCD SIGN NUMBER	SIZE	AREA	SIGN TOTAL AREA ITEM NO. 90208.33	SIGNAL SIGN MOUNTING HARDWARE ITEM NO. 90208.34
		INCHES	SQ.FT.	SQ.FT.	EA.
	R10-10L	24 X 30	5.0		
	R10-10R	24 X 30	5.0		
	R3-5L	30 X 36	7.5		
	R3-5R	30 X 36	7.5		
	R3-5A	30 X 36	7.5		
	R3-6L	30 X 36	7.5		
	R3-6R	30 X 36	7.5		
1	R3-2	36 X 36	4.0	9.0	1
1	R3-1	36 X 36	4.0	9.0	1
	R3-3	24 X 24	4.0		
6	R10-3E	9 X 15	0.9	5.4	**
	R10-11A	24 X 30	5.0		
	R10-13	36 X 24	6.0		
1	R10-27A	30 X 36	7.5	7.5	1
1	D3-1 ***	60 X 18	7.5	7.5	2
			SUBTOTAL	38.4	5
			TOTAL	39	5

**PUSHBUTTON SIGNS & MOUNTING HARDWARE INCLUDED IN 9024920 BID ITEM FOR PUSHBUTTONS

NEMA LOAD SWITCH ASSIGNMENTS

1	2	3	4	5	6	7	8	9	10	11	12	13	14	15	16
	∅2 SBT		∅4 EBL	∅5 SBL	∅6 NBT					OLC SBL		∅2 PED	∅4 PED	∅6 PED	

NOTE: RUN FYA PHASE 5 OFF OF AMBER OUTPUT ON LOAD SWITCH 11.
TOTAL NUMBER OF LOAD SWITCHES = 8

I-270 EB RAMPS AND LILAC AVE
INTERSECTION

D-37C

STATE OF MISSOURI
JASON LEE HAYNES
NUMBER PE-2004017183
PROFESSIONAL ENGINEER

THIS SHEET HAS BEEN SIGNED, SEALED, AND DATED ELECTRONICALLY

DATE PREPARED 3/25/2026
ROUTE I-270 | STATE MO
DISTRICT SL | SHEET NO. 132
COUNTY ST. LOUIS
JOB NO. J6I3020D
CONTRACT ID.
PROJECT NO.
BRIDGE NO.

DESCRIPTION | DATE

MISSOURI HIGHWAYS AND TRANSPORTATION COMMISSION
105 WEST CAPITOL
JEFFERSON CITY, MO 65102
1-888-ASK-MODOT (1-888-275-6636)

HDR Engineering, Inc.
1001 Highlands Plaza Drive
Suite 200
St. Louis, MO 63110-1337
314-425-8300
Certificate of Authority: 000856

IF A SEAL IS PRESENT ON THIS SHEET IT HAS BEEN ELECTRONICALLY SEALED AND DATED.

EFFECTIVE: 12-01-2017

WIRING DIAGRAM

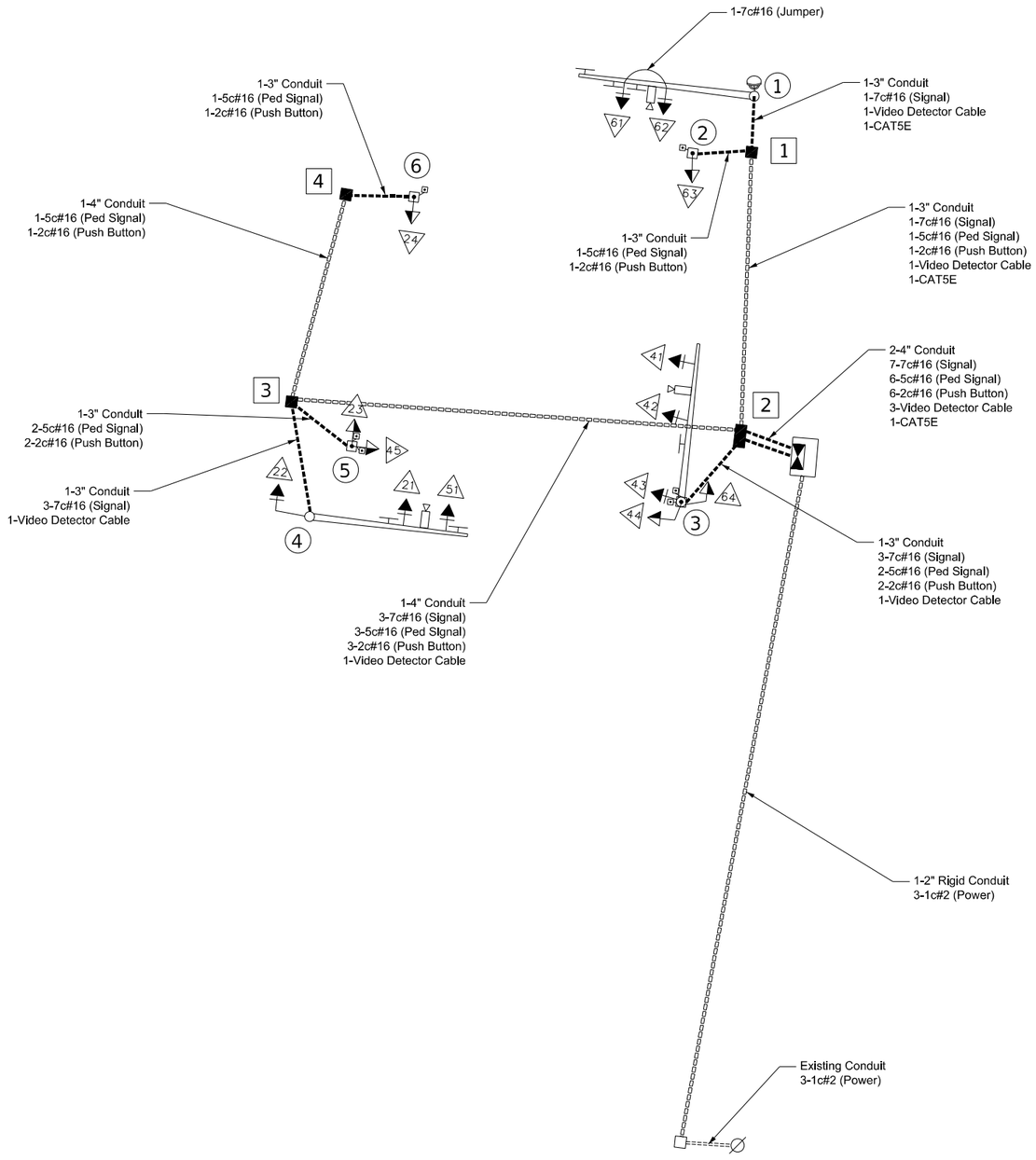

LEGEND

3"	CONDUIT CONTAINING CABLE WITH SIZE
	CABLE
X-Xc	MULTI-CONDUCTOR CABLE #16 AWG (UNLESS OTHERWISE INDICATED)
LIC	#14 AWG DETECTOR LEAD-IN CABLE (2C TWISTED SHIELDED)
X	PULL BOX WITH NUMBER
X	POST WITH NUMBER
X	POST WITH MAST ARM
X	POST WITH MAST ARM AND LUMINAIRE
X	DETECTOR WITH NUMBER
X	SIGNAL HEAD WITH NUMBER
	SIGNAL CONTROLLER
	POWER SUPPLY
	LIGHTING CONTROLLER

I-270 EB RAMPS AND LILAC AVE

INTERSECTION

D-37D

STATE OF MISSOURI
JASON LEE HAYNES
NUMBER PE-2004017183
PROFESSIONAL ENGINEER

THIS SHEET HAS BEEN SIGNED, SEALED, AND DATED ELECTRONICALLY

IF A SEAL IS PRESENT ON THIS SHEET IT HAS BEEN ELECTRONICALLY SEALED AND DATED.

DATE PREPARED 3/25/2026

ROUTE	STATE
I-270	MO
DISTRICT	SHEET NO.
SL	133

COUNTY: ST. LOUIS
JOB NO.: J6I3020D
CONTRACT ID.:
PROJECT NO.:
BRIDGE NO.:

DESCRIPTION	DATE

MISSOURI HIGHWAYS AND TRANSPORTATION COMMISSION
105 WEST CAPITOL
JEFFERSON CITY, MO 65102
1-888-ASK-MODOT (1-888-275-6636)

HDR Engineering, Inc.
1001 Highlands Plaza Drive
Suite 200
St. Louis, MO 63110-1337
314-425-8300
Certificate of Authority: 000856

EFFECTIVE: 12-01-2017

TRAFFIC PHASING AND COLOR SEQUENCE - ACTUATED CONTROLLERS

	PHASE 1	PHASE 2	PHASE 3	PHASE 4	PHASE 5	PHASE 6	PHASE 7	PHASE 8	PED Ø2 OVERLAP	PED Ø4 OVERLAP	PED Ø6 OVERLAP	PED Ø8 OVERLAP	OVERLAP C	
FACE NUMBERS		21 22		41 42 43	51	61 62			23 24	44 45	63 64		51	FACE NUMBERS
SIGNAL INDICATIONS R		R		RL R		R			DW DW	DW DW	DW DW		RL	R
SIGNAL INDICATIONS Y		Y		YL Y		Y							YL	Y
SIGNAL INDICATIONS FYA										FDW FDW	FDW FDW		FYL	FYA
SIGNAL INDICATIONS G		G		G		G			W W	W W	W W			G
DETECTOR ASSIGNMENTS				L	L									DETECTOR ASSIGNMENTS
DETECTOR ASSIGNMENTS (PEDS. ONLY)														
OVERLAP PARENT PHASES													6	

PHASE 1	PHASE 2	PHASE 3	PHASE 4
	OLC		
PHASE 5	PHASE 6	PHASE 7	PHASE 8

RING 1

RING 2

BARRIER

RING STRUCTURE

SIGNAL FACE LOCATION

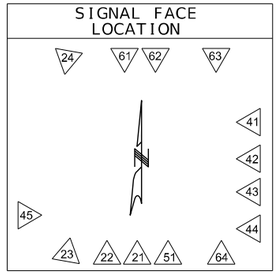

RING AND BARRIER DIAGRAM

	2		4
5	6		

BARRIER

IF CALLED, ALL NON-CONFLICTING PHASES SHALL COMBINE AND TIME CONCURRENTLY. TIME TO BE DETERMINED BY THE ENGINEER AT SIGNAL TURN ON AND SET IN THE CONTROLLER BY THE CONTRACTOR.

LEGEND

- ACTUATED VEHICULAR MOVEMENT
- PARTIALLY RESTRICTED ACTUATED VEHICULAR MOVEMENT
- NON-ACTUATED VEHICULAR MOVEMENT
- PARTIALLY RESTRICTED NON-ACTUATED VEHICULAR MOVEMENT
- ACTUATED PEDESTRIAN MOVEMENT
- NON-ACTUATED PEDESTRIAN MOVEMENT
- VEHICLE STOPPED

FDW — FLASHING DON'T WALK
W — WALK
DW — DON'T WALK
R/W — RIGHT OF WAY INTERVAL
YRt — YELLOW RIGHT ARROW
RT. — GREEN RIGHT ARROW
LY -YL — YELLOW LEFT ARROW
L — GREEN LEFT ARROW
S — GREEN STRAIGHT AHEAD ARROW
G — CIRCULAR GREEN
Y — CIRCULAR YELLOW
R — CIRCULAR RED
RL — RED LEFT ARROW
Ø — TRAFFIC PHASE
AO — ALL OTHERS
FR — FLASHING RED
FY — FLASHING CIRCULAR YELLOW
FYL — FLASHING YELLOW LEFT ARROW

FLASHING OPERATION	
ALL	FR

CONTROLLER TYPE	NEMA

TRAFFIC SIGNAL CONTROL OPERATION

INTERSECTION OF

I-270 EB RAMPS WITH LILAC AVE

D-38A

STATE OF MISSOURI
JASON LEE HAYNES
NUMBER PE-2004017183
PROFESSIONAL ENGINEER
THIS SHEET HAS BEEN SIGNED, SEALED, AND DATED ELECTRONICALLY

DATE PREPARED 3/25/2026

ROUTE	STATE
I-270	MO
DISTRICT	SHEET NO.
SL	134

COUNTY: ST. LOUIS

JOB NO.: J6I3020D

CONTRACT ID.:

PROJECT NO.:

BRIDGE NO.:

DESCRIPTION	DATE

IF A SEAL IS PRESENT ON THIS SHEET IT HAS BEEN ELECTRONICALLY SEALED AND DATED.

MISSOURI HIGHWAYS AND TRANSPORTATION COMMISSION

105 WEST CAPITOL
JEFFERSON CITY, MO 65102
1-888-ASK-MODOT (1-888-275-6636)

HDR Engineering, Inc.
1001 Highlands Plaza Drive
Suite 200
St. Louis, MO 63110-1337
314-425-8300
Certificate of Authority: 000856

SEC/SUR 35 TWP 47N RGE 7E

(69'-69') PRESTRESSED CONCRETE NU-GIRDER SPANS

Pile Encasement	Option Used (✓)
Pipe Pile Spacer	
Pile Jacket	

MoDOT Construction personnel will indicate the pile encasement used.

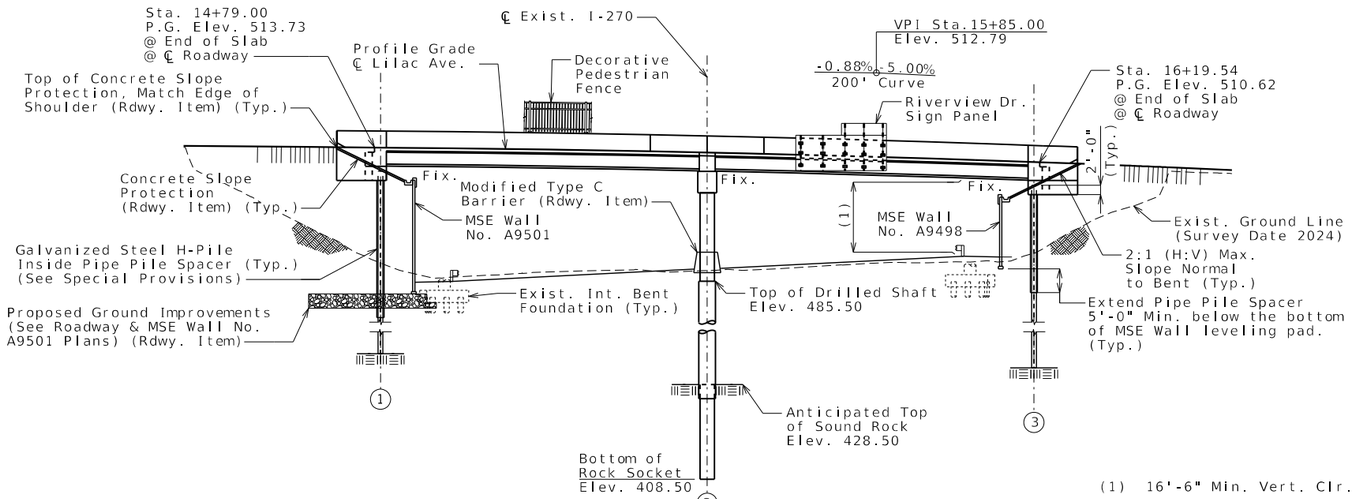

(1) 16'-6" Min. Vert. Clr.

GENERAL ELEVATION

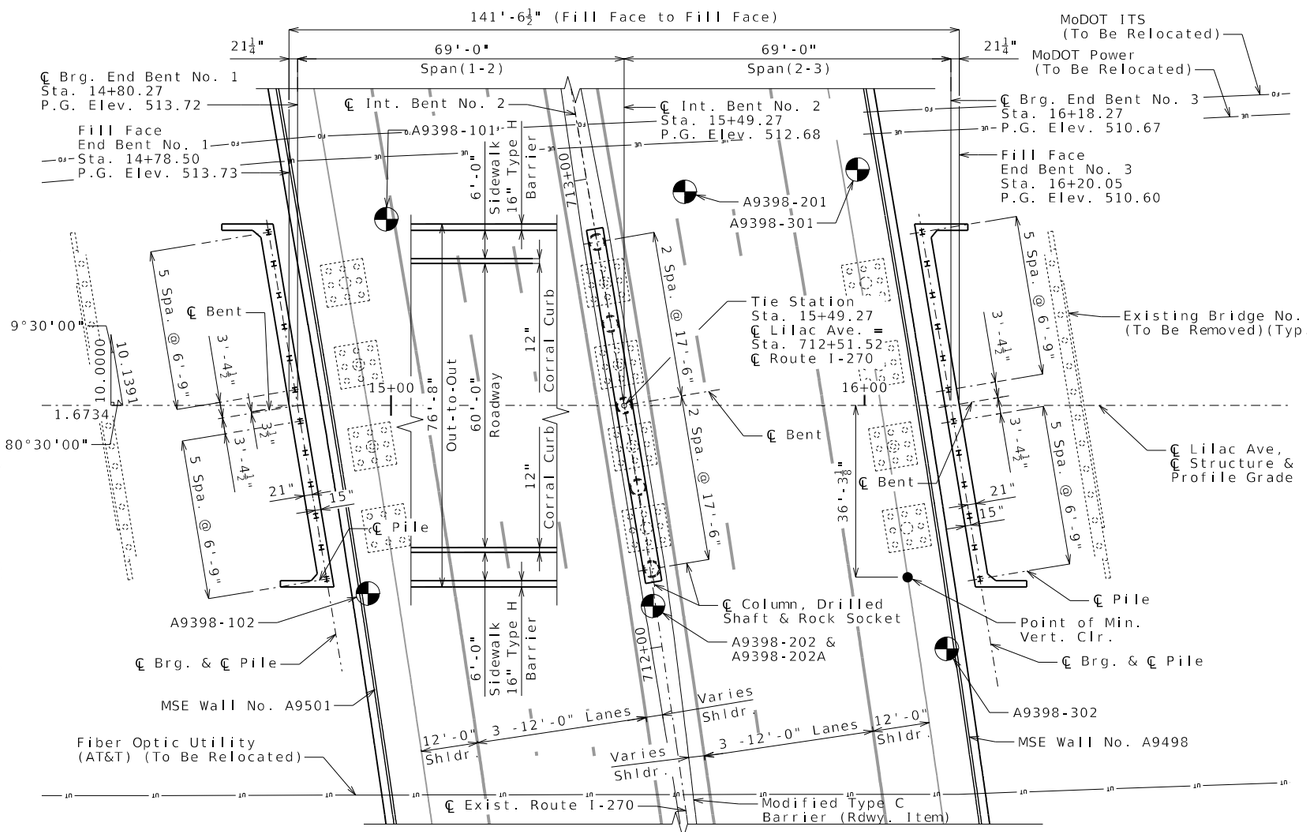

PLAN

EXIST. ROUTE I-270	
CURVE_EX_I-270_3	
PI	707+24.51
PC	701+64.15
PT	712+78.60
Δ	14°50'58.5" (LT)
D	1°19'56.9"
L	1,114.45 (ARC)
T	560.36'
R	4,300.00'

(*) To facilitate the installation of the proposed intermediate bent foundations the contractor may be required to partially remove existing footing concrete. Cost of any partial removal is considered incidental to Removal of Bridges (A0221).

All bents are parallel.

All dimensions are horizontal.

For General Notes, Estimated Quantities, Estimated Quantities for Slab on Concrete NU-Girder and Location Sketch, see Sheet No. 2.

For Foundation Data, see Sheet No. 3.

For details of ground improvements, see MSE Wall No. A9501 plans.

Contractor shall coordinate construction of Bridge No. A9398 with MSE Walls No. A9501 & A9498.

Roadway fill, exclusive of Select Granular Backfill for Structural Systems, shall be completed to the final roadway section and up to the elevation of the bottom of the concrete beam within the limits of the structure and for not less than 25 feet in back of the fill face of the end bents before any piles are driven for any bents falling within the embankment section.

⊕ Indicates location of borings.

Notice and Disclaimer Regarding Boring Log Data

The locations of all subsurface borings for this structure are shown on the plan sheet for this structure. The boring data for all locations indicated, as well as any other boring logs or other factual records of subsurface data and investigations performed by the department for the design of the project, are shown on Sheets No. 34 thru 43 and may be included in the Electronic Bridge Deliverables. They will also be available from the Project Contact upon written request. No greater significance or weight should be given to the boring data depicted on the plan sheets than is given to the subsurface data available from the district or elsewhere.

The Commission does not represent or warrant that any such boring data accurately depicts the conditions to be encountered in constructing this project. A contractor assumes all risks it may encounter in basing its bid prices, time or schedule of performance on the boring data depicted here or those available from the district, or on any other documentation not expressly warranted, which the contractor may obtain from the Commission.

BM #1 - CUT SQUARE ON WEST SIDE OF CONC TRAFFIC SIGNAL BASE; ON NORTH SIDE OF I-270 ALSO BEING ON THE EAST SIDE OF LILAC AVE
ELEV= 518.16
NAVD -88

BM #2 - CUT SQUARE ON WEST SIDE OF CONC TRAFFIC SIGNAL BASE; SOUTH OF I-270 ALSO BEING ON THE EAST SIDE OF LILAC AVE
ELEV= 508.26
NAVD -88

Designed August 2025
Detailed August 2025
Checked August 2025

Note: This drawing is not to scale. Follow dimensions.

BRIDGE: LILAC AVE. OVER ROUTE I-270

ROUTE I-270 FROM ROUTE H TO ROUTE 367
ABOUT 1.1 MILES WEST OF ROUTE H
TIE STATION 712+51.52

RYAN DAVID SHAW
NUMBER PE-2017000368
STATE OF MISSOURI
PROFESSIONAL ENGINEER
THIS SHEET HAS BEEN SIGNED, SEALED AND DATED ELECTRONICALLY

DATE PREPARED 4/1/2026

ROUTE	STATE
I-270	MO
DISTRICT	SHEET NO.
BR	1

COUNTY ST. LOUIS
JOB NO. J6I3020D
CONTRACT ID.
PROJECT NO.
BRIDGE NO. A9398

DESCRIPTION | DATE

MISSOURI HIGHWAYS AND TRANSPORTATION COMMISSION
105 WEST CAPITOL
JEFFERSON CITY, MO 65102
1-888-ASK-MODOT (1-888-275-6636)

HDR Engineering, Inc.
1001 Highlands Plaza Drive
Suite 200
St. Louis, MO 63110
314-425-6300
Certificate of Authority: 000856

Estimated Quantities

Item		Substr.	Superstr.	Total
Removal of Miscellaneous ACM (Non-Friable)	sq. foot		16	16
Removal of Bridges (A0221)	lump sum			1
Bridge Approach Slab (Major)	sq. yard		332	332
(60 in.) Decorative Pedestrian Fence (Structures)	linear foot		313	313
Drilled Shafts (3 ft. 6 in. Dia.)	linear foot	285		285
Rock Sockets (3 ft. 0 in. Dia.)	linear foot	100		100
Video Camera Inspection	each	5		5
Foundation Inspection Holes	linear foot	150		150
Sonic Logging Testing	each	5		5
Galvanized Structural Steel Piles (12 in.)	linear foot	1860		1860
Pile Point Reinforcement	each	24		24
Class B Concrete (Substructure)	cu. yard	138.5		138.5
Type H Barrier	linear foot		316	316
Slab on Concrete NU-Girder	sq. yard		1197	1197
Corral Curb	linear foot		361	361
NU 35, Prestressed Concrete NU-Girder	linear foot		1242	1242
Conduit System on Structure	lump sum		1	1
Reinforcing Steel (Galvanized)	pound	49,840		49,840
Protective Coating - Concrete Bents and Piers (Epoxy)	lump sum	1		1
Fabricated Sign Support Brackets	lump sum		1	1
Vertical Drain at End Bents	each	2		2
Plain Neoprene Bearing Pad	each		9	9
Laminated Neoprene Bearing Pad	each		9	9
Laminated Neoprene Bearing Pad (Tapered)	each		18	18
Pipe Pile Spacers	each	24		24

Cost of L4x4 ASTM A709 Grade 36 HP pile anchors and 3/4-inch diameter ASTM F3125 Grade A325 Type 1 bolts, complete in place, will be considered completely covered by the contract unit price for Galvanized Structural Steel Piles (12 in.).

All concrete above the construction joint in the end bents is included in the Estimated Quantities for Slab on Concrete NU-Girder.

All reinforcement in the end bents is included in the Estimated Quantities for Slab on Concrete NU-Girder.

All reinforcement in the intermediate bent concrete diaphragms except reinforcement embedded in the beam cap is included in the Estimated Quantities for Slab on Concrete NU-Girder.

All concrete above the intermediate beam cap is included in the Estimated Quantities for Slab on Concrete NU-Girder.

Estimated Quantities for Slab on Concrete NU-Girder

Item		Total
Class B-2 Concrete	cu. yard	382
Reinforcing Steel (Galvanized)	pound	105,350

The table of Estimated Quantities for Slab on Concrete NU-Girder represents the quantities used by the State in preparing the cost estimate for concrete slabs. The area of the concrete slab will be measured to the nearest square yard longitudinally from end of slab to end of slab and transversely from out to out of bridge slab (or with the horizontal dimensions as shown on the plan of slab). Payment for stay-in-place corrugated steel forms, conventional forms, all concrete and galvanized reinforcing steel will be considered completely covered by the contract unit price for the slab. Variations may be encountered in the estimated quantities but the variations cannot be used for an adjustment in the contract unit price.

Method of forming the slab shall be as shown on the plans and in accordance with Sec 703. All hardware for forming the slab to be left in place as a permanent part of the structure shall be coated in accordance with ASTM A123 or ASTM B633 with a thickness class SC 4 and a finish type I, II or III.

Slab shall be cast-in-place with conventional forms or stay-in-place corrugated steel forms. Precast prestressed panels will not be permitted.

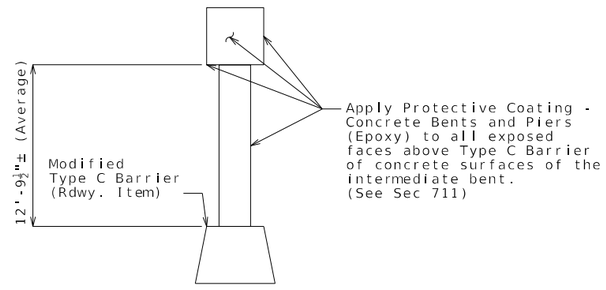

PROTECTIVE COATING DETAILS AT INTERMEDIATE BENT NO. 2

General Notes:

DESIGN SPECIFICATIONS:
2020 AASHTO LRFD Bridge Design Specifications (9th Ed.)
2023 AASHTO Guide Specifications for LRFD Seismic Bridge Design (3rd Ed.)
Seismic Design Category = B (Seismic Details)
Design earthquake response spectral acceleration coefficient at 1.0 second period, $S_{D1} < 0.221g$
Acceleration coefficient (effective peak ground acceleration coefficient), $A_S = 0.232g$

DESIGN LOADING:
Vehicular = HL-93
Future Wearing Surface = 35 lb/sf
Earth = 120 lb/cf
Equivalent Fluid Pressure = 45 lb/cf (Min.)
Superstructure: Simply-Supported, Non-Composite for dead load.
Continuous Composite for live load.

DESIGN UNIT STRESSES:

Class B Concrete (Substructure)	f'c = 3,000 psi
Class B-2 Concrete (Drilled Shafts & Rock Sockets)	f'c = 4,000 psi
Class B-2 Concrete (Superstructure, except Prestressed Girders and Barrier)	f'c = 4,000 psi
Class B-1 Concrete (Barrier & Corral Curb)	f'c = 4,000 psi
Reinforcing Steel (ASTM A706 Grade 60)	fy = 60,000 psi
Structural Steel HP Pile (ASTM A709 Grade 50)	fy = 50,000 psi

For prestressed girder stresses, see Sheets No. 14 & 15.

NEOPRENE PADS:
Neoprene bearing pads shall be 60 durometer and shall be in accordance with Sec 716.

FABRICATED STEEL CONNECTIONS:
Field connections shall be made with ASTM F3125 Grade A325 Type 1 bolts and 13/16-inch diameter holes, except as noted.

JOINT FILLER:
All joint filler shall be in accordance with Sec 1057 for preformed sponge rubber expansion and partition joint filler, except as noted.

REINFORCING STEEL:
Minimum clearance to reinforcing steel shall be 1 1/2", unless otherwise shown.

MBS refers to mechanical bar splices. Mechanical bar splices shall be in accordance with Sec 706 or 710 except that no measurement will be made for mechanical bar splices and they will be considered completely covered by the contract unit price for other items.

GALVANIZED REINFORCING STEEL:
Specification, materials, zinc coating process and construction practice shall be in accordance with ASTM A1094/A1094M-20.

Galvanized reinforcing steel shall not come in contact with uncoated reinforcing steel. Nylon, PVC or Polyethylene spacers shall be used where necessary. Nylon cable ties shall be used to bind the spacers to the reinforcement.

CONCRETE PROTECTIVE COATINGS:
Protective coating for concrete bents and piers (Epoxy) shall be applied as shown on the bridge plans and in accordance with Sec 711.

STAY-IN-PLACE CORRUGATED STEEL FORMS:
Corrugated steel forms, supports, closure elements and accessories shall be in accordance with grade requirement and coating designation G165 of ASTM A653. Complete shop drawings of the permanent steel deck forms shall be required in accordance with Sec 1080.

Corrugations of stay-in-place forms shall be filled with an expanded polystyrene material. The polystyrene material shall be placed in the forms with an adhesive in accordance with the manufacturer's recommendations.

Form sheets shall not rest directly on the top of girder flanges. Sheets shall be securely fastened to form supports with a minimum bearing length of one inch on each end. Form supports shall be placed in direct contact with the flange. Welding on or drilling holes in the girder flanges will not be permitted. All steel fabrication and construction shall in accordance with Sec 1080 and 712. Certified field welders will not be required for welding of the form supports.

The design of stay-in-place corrugated steel forms is per manufacturer which shall be in accordance with Sec 703 for false work and forms. Maximum actual weight of corrugated steel forms allowed shall be 4 psf assumed for girder loading.

TRAFFIC HANDLING:
Vertical clearance for Route I-270 traffic during construction shall be 15'-6" minimum over all through lanes of traffic.

Structure to be closed during construction. Traffic to be maintained on other routes during construction. See roadway plans for traffic control.

MISCELLANEOUS:
High strength bolts, nuts and washers will be sampled for quality assurance as specified in Sec 106.

Outline of existing work is indicated by light dashed lines. Heavy lines indicate new work.

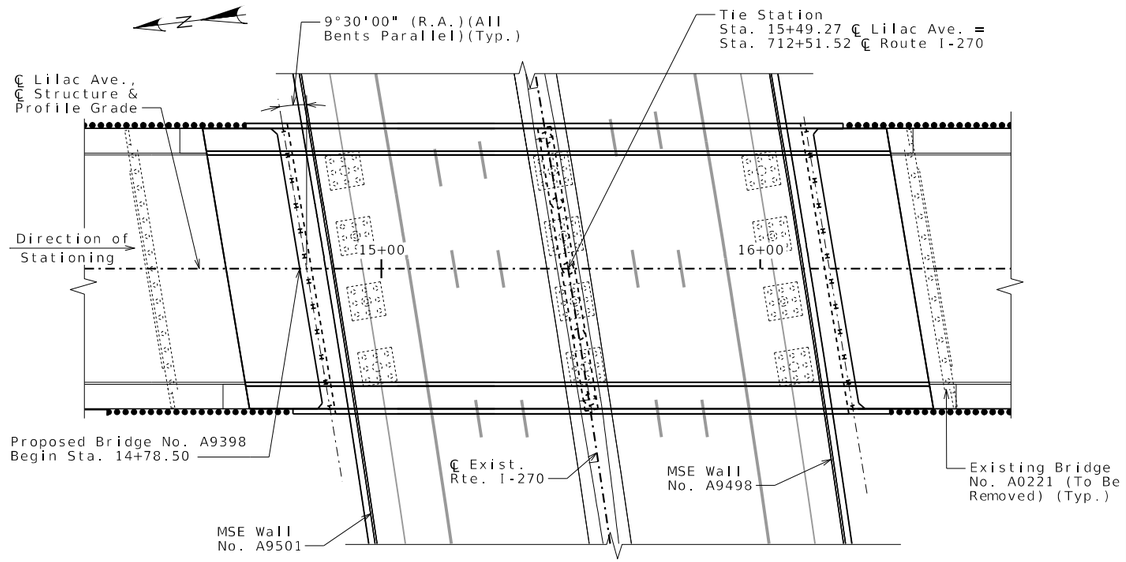

LOCATION SKETCH

Detailed August 2025
Checked August 2025

Note: This drawing is not to scale. Follow dimensions.

STATE OF MISSOURI
RYAN DAVID SHAW
NUMBER PE-2017000368
PROFESSIONAL ENGINEER

THIS SHEET HAS BEEN SIGNED, SEALED AND DATED ELECTRONICALLY

DATE PREPARED
4/1/2026

ROUTE	STATE
I-270	MO
DISTRICT	SHEET NO.
BR	2

COUNTY
ST. LOUIS

JOB NO.
J6I3020D

CONTRACT ID.

PROJECT NO.

BRIDGE NO.
A9398

DESCRIPTION	DATE

MISSOURI HIGHWAYS AND TRANSPORTATION COMMISSION
105 WEST CAPITOL
JEFFERSON CITY, MO 65102
1-888-ASK-MODOT (1-888-275-6636)

HDR Engineering, Inc.
1001 Highlands Plaza Drive
Suite 200
St. Louis, MO 63110
314-425-6300
Certificate of Authority: 000856

Foundation Data

Type	Design Data		Bent Number 1	Bent Number 2	Bent Number 3
Load Bearing Pile	Pile Type and Size		HP 12x53		HP 12x53
	Number	ea	12		12
	Approximate Length Per Each	ft	75		80
	Pile Point Reinforcement	ea	All		All
	Min. Galvanized Penetration (Elev.)	ft	Full Length		Full Length
	Minimum Tip Penetration (Elev.)	ft	--		--
	Criteria for Min. Tip Penetration		(*)		(*)
	Pile Driving Verification Method		DF		DF
	Resistance Factor		0.4		0.4
	Minimum Nominal Axial Compressive Resistance	kip	455		455
Rock Socket	Number	ea		5	
	Layer 1: Foundation Material			Weak Rock	
	Layer 1: Elevation Range	ft		428.5-413	
	Layer 1: Minimum Nominal Axial Compressive Resistance (Side Resistance)	ksf		14.4	
	Layer 2: Foundation Material			Rock	
	Layer 2: Elevation Range	ft		413-408.5	
	Layer 2: Minimum Nominal Axial Compressive Resistance (Side Resistance)	ksf		24.1	
	Minimum Nominal Axial Compressive Resistance (Tip Resistance)	ksf		51.0	

DF = FHWA-modified Gates Dynamic Pile Formula

(*) HP piles are anticipated to be driven to refusal on rock. Review all borings for depth of rock and restrict driving as appropriate to comply with hard rock driving criteria in accordance with Sec 702. When pile refusal on rock occurs, as approved by the engineer, the minimum nominal axial compressive resistance is verified and no additional pile driving verification method is required.

Load Bearing Pile:

$$\text{Minimum Nominal Axial Compressive Resistance} = \frac{\text{Maximum Factored Loads}}{\text{Resistance Factor}}$$

Rock Socket (Drilled Shafts):

$$\text{Minimum Nominal Axial Compressive Resistance (Side Resistance + Tip Resistance)} = \frac{\text{Maximum Factored Loads}}{\text{Resistance Factors}}$$

Pile point reinforcement need not be galvanized. Shop drawings will not be required for pile point reinforcement.

The contractor shall make every effort to achieve the minimum galvanized penetration (elevation) shown on the plans for all piles. Deviations in penetration less than 5 feet of the minimum will be considered acceptable provided the contractor makes the necessary corrections to ensure the minimum penetration is achieved on subsequent piles.

FOUNDATION DATA

Detailed August 2025
Checked August 2025

Note: This drawing is not to scale. Follow dimensions.

STATE OF MISSOURI
RYAN DAVID SHAW
NUMBER PE-2017000368
PROFESSIONAL ENGINEER

THIS SHEET HAS BEEN SIGNED, SEALED AND DATED ELECTRONICALLY

DATE PREPARED 4/1/2026

ROUTE	STATE
I-270	MO
DISTRICT	SHEET NO.
BR	3

COUNTY: ST. LOUIS

JOB NO.: J6I3020D

CONTRACT ID.:

PROJECT NO.:

BRIDGE NO.: A9398

DESCRIPTION | DATE

MISSOURI HIGHWAYS AND TRANSPORTATION COMMISSION

MoDOT

105 WEST CAPITOL
JEFFERSON CITY, MO 65102
1-888-ASK-MODOT (1-888-275-6636)

HDR Engineering, Inc.
1001 Highlands Plaza Drive
Suite 200
St. Louis, MO 63110
314-425-8300
Certificate of Authority: 000856

c:\pwworking\central01\d4954830\B_A9398_003_J6I3020D.dgn 2:33:44 PM 4/1/2026

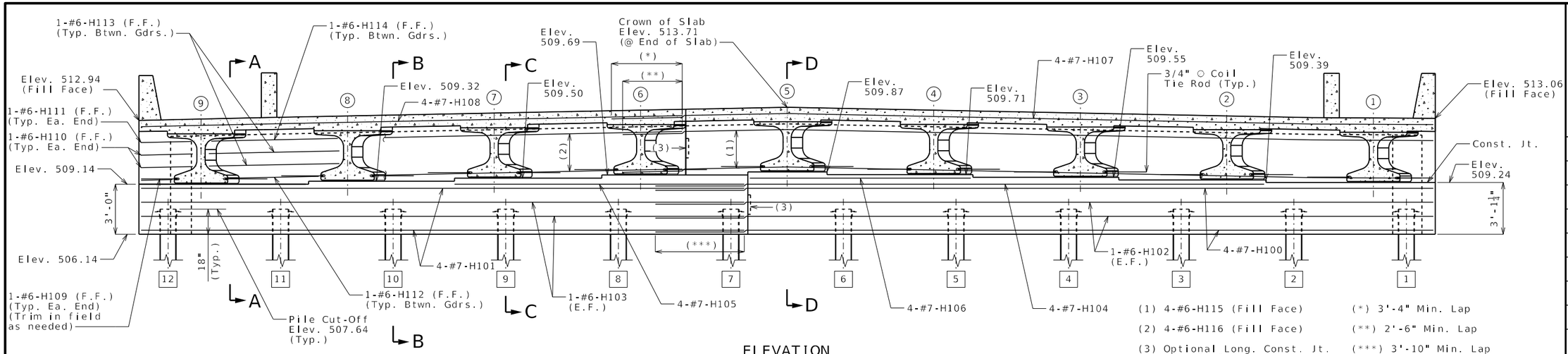

ELEVATION

(Looking Back Station)

(1) 4-#6-H115 (Fill Face)
(2) 4-#6-H116 (Fill Face)
(3) Optional Long. Const. Jt. w/ 14"x12"x2" Key

(*) 3'-4" Min. Lap
(**) 2'-6" Min. Lap
(***) 3'-10" Min. Lap

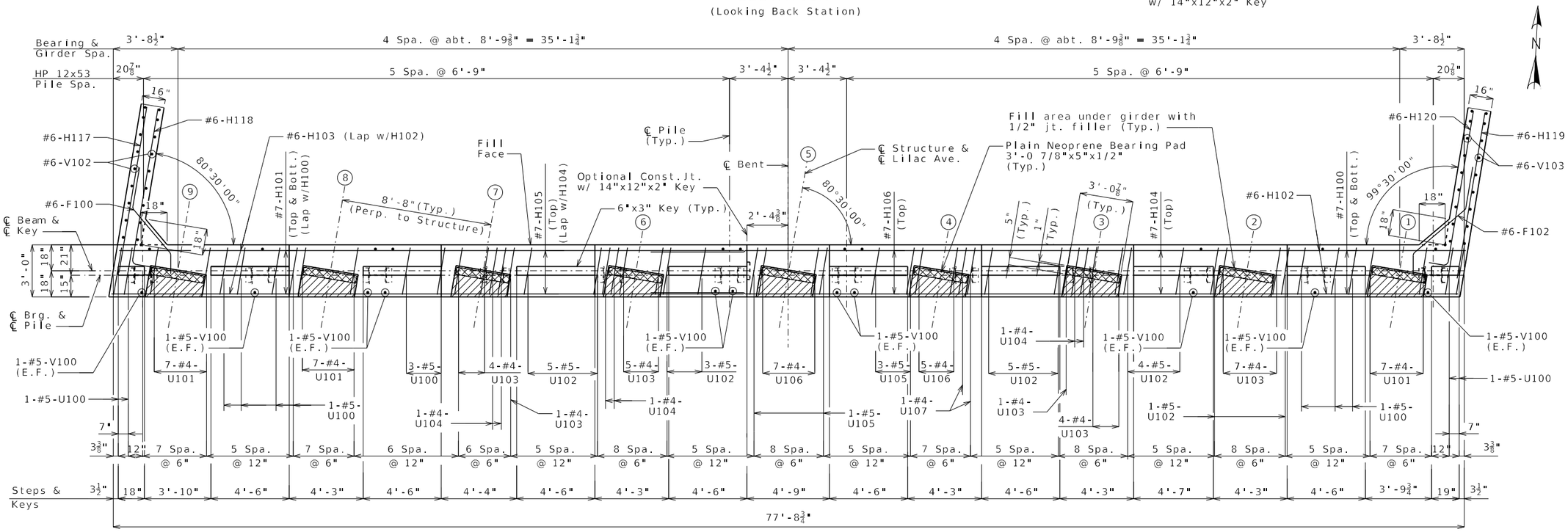

PLAN OF BEAM

(Horizontal dimensions are measured along ℄ Piles and ℄ Brg.)

Substructure Quantity Table for End Bent No. 1		
Item		Quantity
Galvanized Structural Steel Piles (12 in.)	linear foot	900
Pile Point Reinforcement	each	12
Class B Concrete (Substructure)	cu. yard	31.6
Pipe Pile Spacers	each	12

These quantities are included in the Estimated Quantities table on Sheet No. 2.

Notes:

Work this sheet with Sheets No. 5 & 6.

For Sections A-A thru C-C, see Sheet No. 5.

For Section D-D, see Sheet No. 6.

For Key Details, Pile Anchor Details and Steel Splice Detail, see Sheet No. 6.

For location of coil tie rods, see Sheets No. 14 & 15.

Notes (Cont.):

Reinforcing steel shall be shifted to clear piles. U-bars shall clear piles by at least 1 1/2-inches.

Strands at ends of girders shall be field bent or, if necessary, cut in field to maintain 1 1/2-inches minimum clearance to fill face of end bent.

All concrete in the end bent above top of beam and below top of slab shall be Class B-2.

Notes (Cont.):

#6-F100 and #6-F102 bars shall be bent in field to clear girders.

The U-bars, pairs of V-bars and #5-H126 bars shall be placed parallel to centerline of roadway.

For details and reinforcement of barriers at end bent, see Sheet No. 23.

E.F. Denotes Each Face.

F.F. Denotes Front Face.

(1) - Denotes girder number.

[1] - Denotes pile number.

END BENT NO. 1 DETAILS

Detailed August 2025
Checked August 2025

Note: This drawing is not to scale. Follow dimensions.

RYAN DAVID SHAW NUMBER PE-2017003388 PROFESSIONAL ENGINEER
THIS SHEET HAS BEEN SIGNED, SEALED AND DATED ELECTRONICALLY

DATE PREPARED 4/1/2026
ROUTE I-270 | STATE MO
DISTRICT BR | SHEET NO. 4
COUNTY ST. LOUIS
JOB NO. J6I3020D
CONTRACT ID.
PROJECT NO.
BRIDGE NO. A9398

DESCRIPTION | DATE

MISSOURI HIGHWAYS AND TRANSPORTATION COMMISSION
105 WEST CAPITOL
JEFFERSON CITY, MO 65102
1-888-ASK-MODOT (1-888-275-6636)

HDR Engineering, Inc.
1001 Highlands Plaza Drive
Suite 200
St. Louis, MO 63110
314-425-6300
Certificate of Authority: 000856

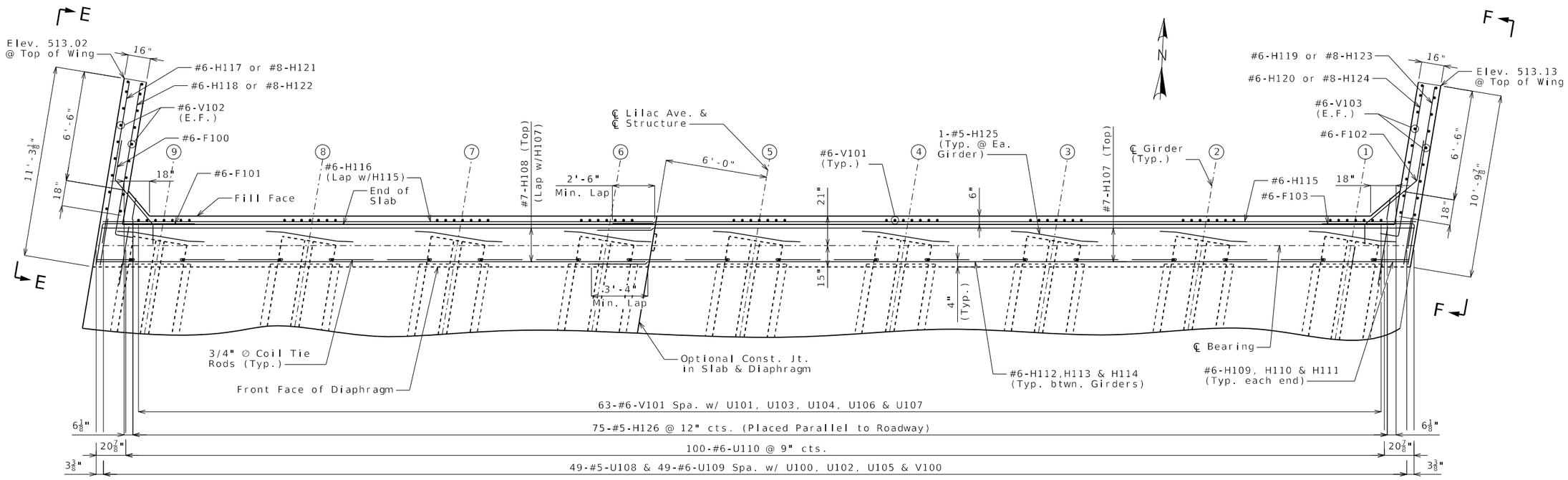

PART PLAN

(Horizontal dimensions are measured along ℄ Brg.)

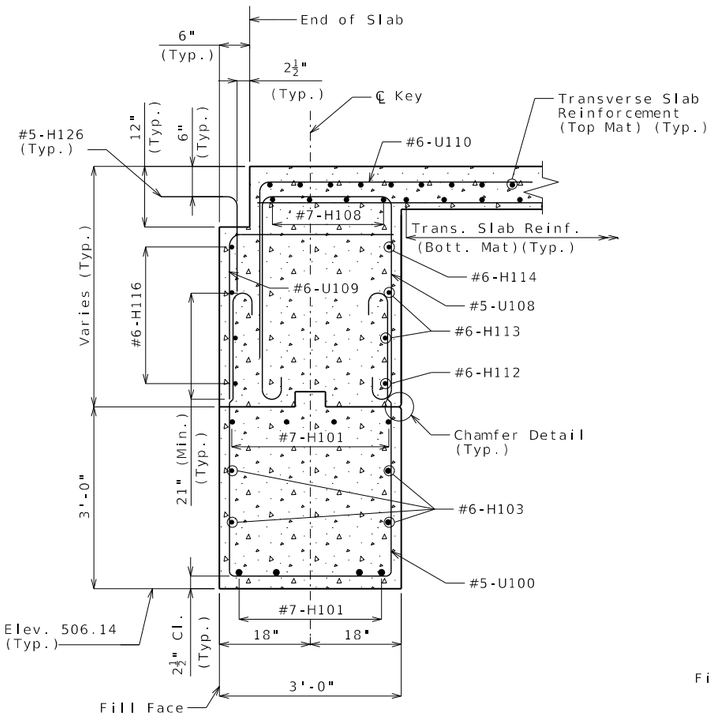

SECTION A-A

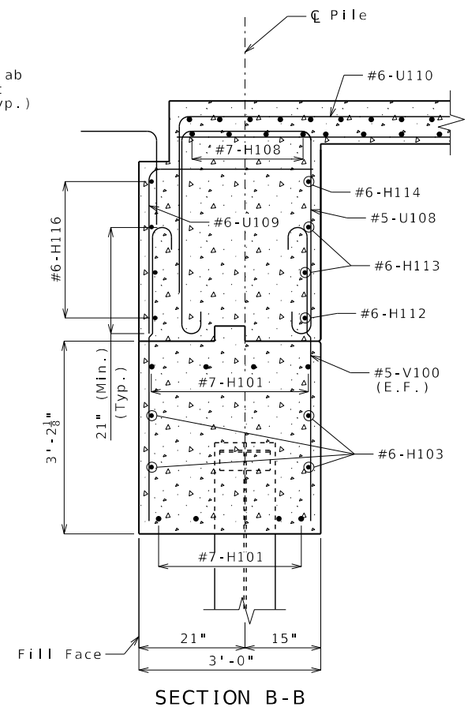

SECTION B-B

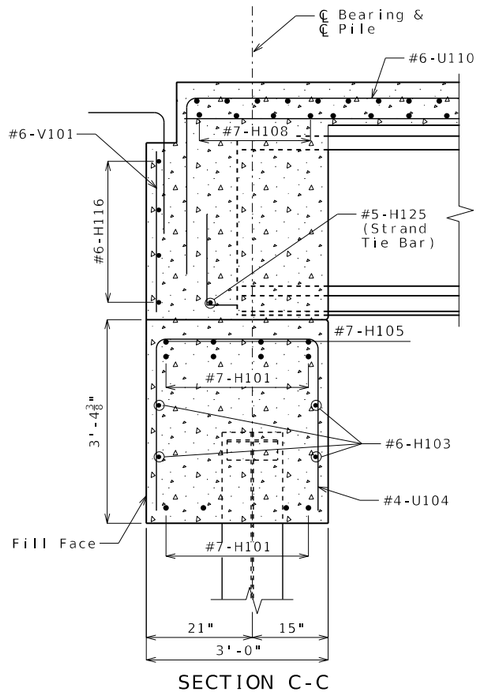

SECTION C-C

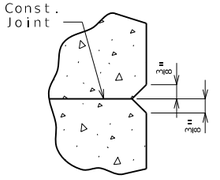

CHAMFER DETAIL

Notes:

Work this sheet with Sheets No. 4 & 6.

#6-F100 and #6-F102 bars shall be bent in the field to clear girders.

The U-bars and #5-H126 bars shall be placed parallel to centerline roadway.

For location of Sections A-A thru C-C, see Sheet No. 4.

For Section D-D, see Sheet No. 6.

For Elevations E-E and F-F, see Sheet No. 6.

For Key details, Pile Anchor details and Pile Splice details, see Sheet No. 6.

For location of coil tie rods and #5-H125 (strand tie bar), see Sheets No. 14 & 15.

For details and reinforcement of barriers at end bent, see Sheet No. 23.

E.F. Denotes Each Face.

(1) - Denotes girder number.

END BENT NO. 1 DETAILS

Detailed August 2025
Checked August 2025

Note: This drawing is not to scale. Follow dimensions.

STATE OF MISSOURI
RYAN DAVID SHAW
NUMBER PE-2017003388
PROFESSIONAL ENGINEER
THIS SHEET HAS BEEN SIGNED, SEALED AND DATED ELECTRONICALLY

DATE PREPARED 4/1/2026

ROUTE	STATE
I-270	MO
DISTRICT	SHEET NO.
BR	5

COUNTY: ST. LOUIS

JOB NO.: J6I3020D

CONTRACT ID.:

PROJECT NO.:

BRIDGE NO.: A9398

DESCRIPTION

DATE

MISSOURI HIGHWAYS AND TRANSPORTATION COMMISSION
105 WEST CAPITOL
JEFFERSON CITY, MO 65102
1-888-ASK-MODOT (1-888-275-6636)

HDR Engineering, Inc.
1001 Highlands Plaza Drive
Suite 200
St. Louis, MO 63110
314-425-8300
Certificate of Authority: 000856

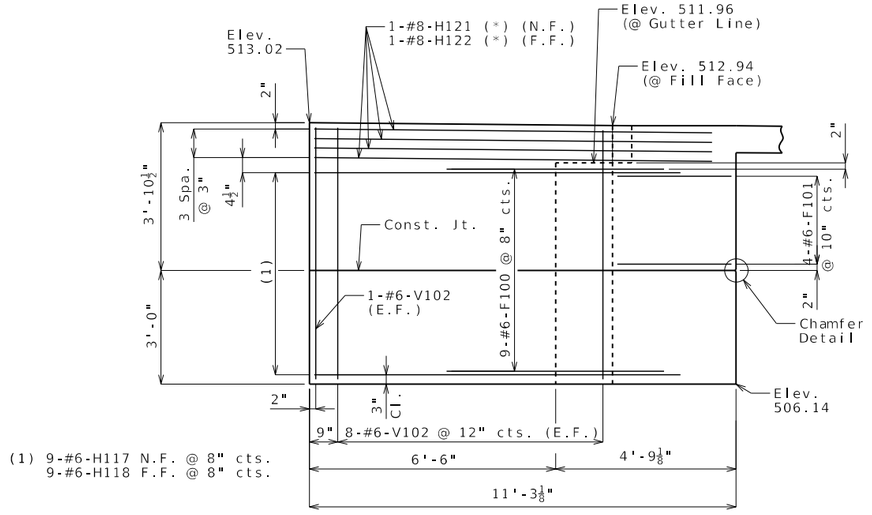

(1) 9-#6-H117 N.F. @ 8" cts.
9-#6-H118 F.F. @ 8" cts.

SECTION E-E

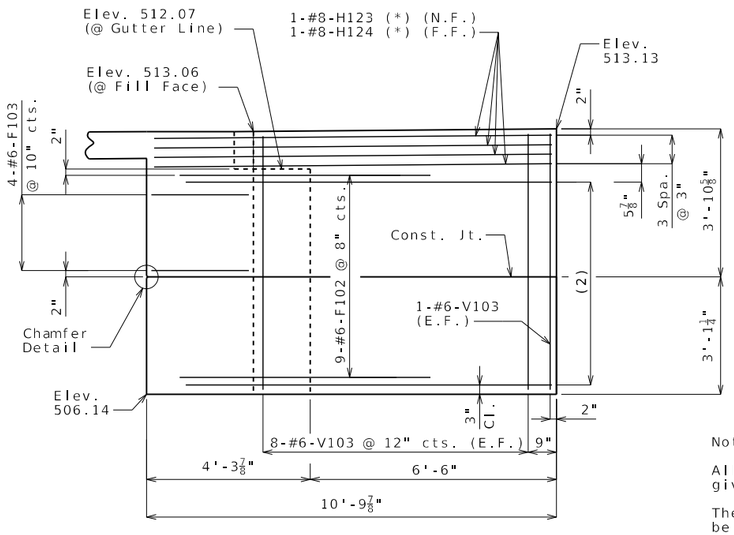

(2) 9-#6-H119 N.F. @ 8" cts.
9-#6-H120 F.F. @ 8" cts.

SECTION F-F

Notes:

All dimensions and elevations given at outside face of wing.

The #6-F100 and #6-F102 bars shall be bent in the field to clear girders.

(*) Place with grade

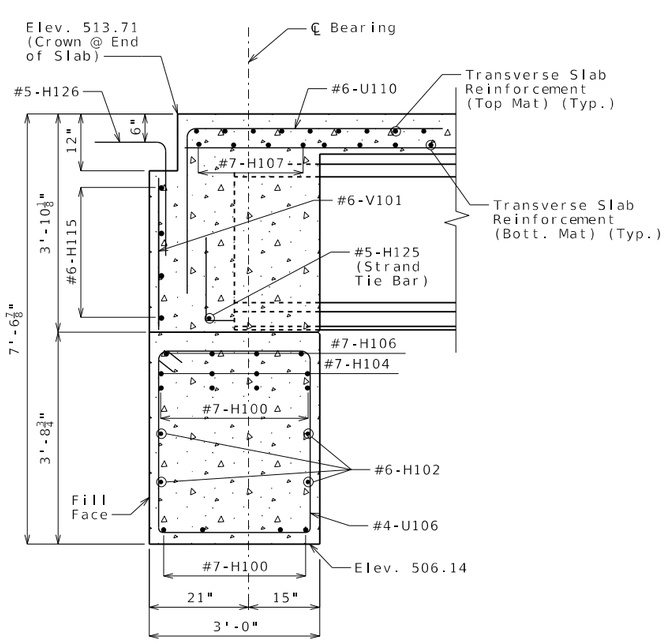

SECTION D-D

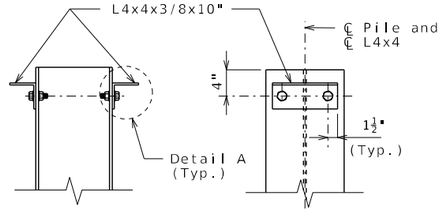

DETAILS OF HP PILE ANCHORS

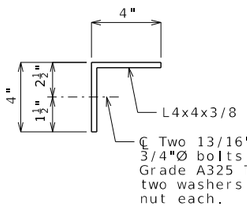

DETAIL A

Angles shall be coated with a minimum of two coats of non-aluminum epoxy mastic primer to provide a dry film thickness of 4 mils minimum, 8 mils maximum, or galvanized in accordance with Sec 1081. Bolts, washers and nuts shall be galvanized in accordance with AASHTO M 232 (ASTM A153), Class C.

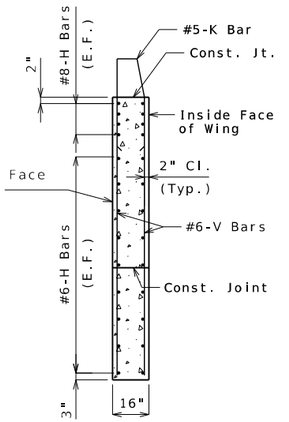

TYPICAL SECTION THRU WING

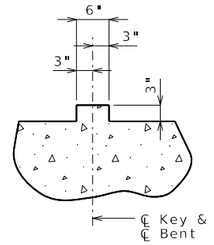

TYPICAL SECTION THRU KEY

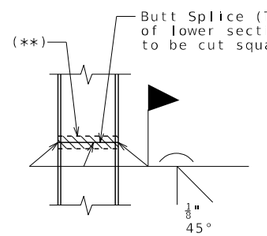

STEEL PILE SPLICE
(If required)

(**) Galvanizing material shall be omitted or removed one inch clear of weld locations in accordance with Sec 702.

Notes:

Work this sheet with Sheets No. 4 & 5.

For Chamfer Detail, see Sheet No. 5.

For location of Section D-D, see Sheet No. 4.

For location of Elevations E-E and F-F, see Sheet No. 5.

For details and reinforcement of barriers at end bent, see Sheet No. 23.

E.F. Denotes Each Face.

F.F. Denotes Far Face.

N.F. Denotes Near Face.

END BENT NO. 1 DETAILS

Detailed August 2025
Checked August 2025

Note: This drawing is not to scale. Follow dimensions.

STATE OF MISSOURI
RYAN DAVID SHAW
NUMBER PE-2017000388
PROFESSIONAL ENGINEER
THIS SHEET HAS BEEN SIGNED, SEALED AND DATED ELECTRONICALLY

DATE PREPARED 4/1/2026
ROUTE I-270 | STATE MO
DISTRICT BR | SHEET NO. 6
COUNTY ST. LOUIS
JOB NO. J6I3020D
CONTRACT ID.
PROJECT NO.
BRIDGE NO. A9398

DESCRIPTION | DATE

MISSOURI HIGHWAYS AND TRANSPORTATION COMMISSION
105 WEST CAPITOL
JEFFERSON CITY, MO 65102
1-888-ASK-MODOT (1-888-275-6636)

HDR Engineering, Inc.
1001 Highlands Plaza Drive
Suite 200
St. Louis, MO 63110
314-425-8300
Certificate of Authority: 000856

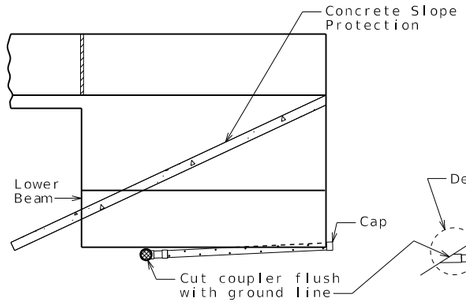

ELEVATION OF WING

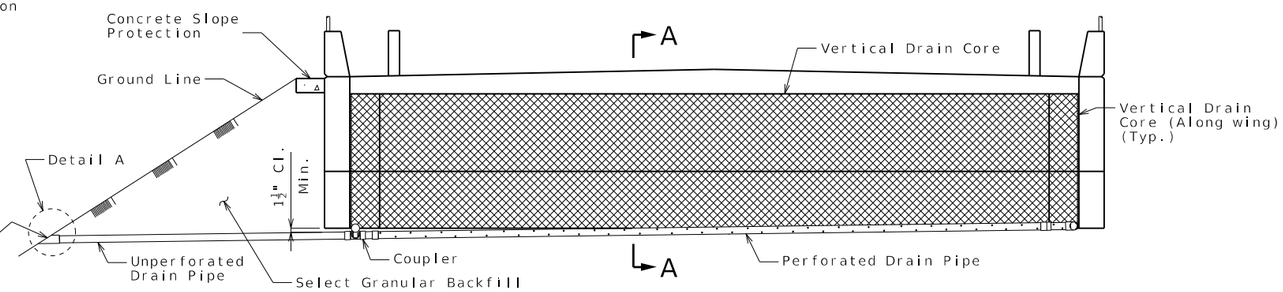

ELEVATION OF END BENT

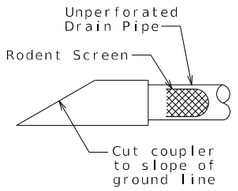

DETAIL A

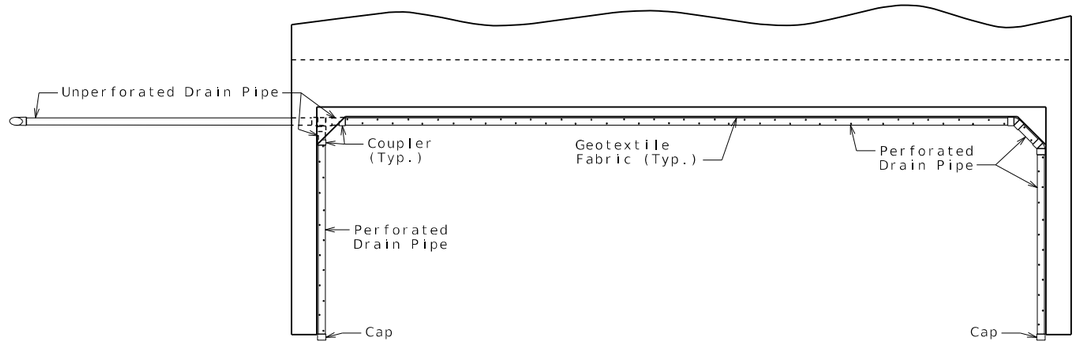

PLAN OF END BENT

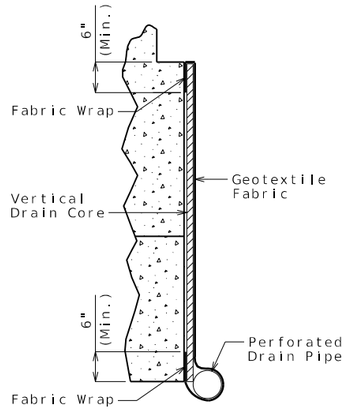

PART SECTION A-A
(Section thru wing similar)

General Notes:

Coordinate construction of vertical drain at end bents with MSE Wall Nos. A9501 and A9498.

All drain pipe shall be sloped 1 to 2 percent.

Drain pipe may be either 6-inch diameter corrugated metallic-coated steel pipe underdrain, 4-inch diameter corrugated polyvinyl chloride (PVC) drain pipe, or 4-inch diameter corrugated polyethylene (PE) drain pipe.

Drain pipe shall be placed at fill face of end bent and inside face of wings. The pipe shall slope to lowest grade of ground line, also missing the lower beam of end bent by a minimum of 1 1/2 inches.

Perforated pipe shall be placed at fill face side and inside face of wings at the bottom of end bent and plain pipe shall be used where the vertical drain ends to the exit at ground line.

VERTICAL DRAIN AT END BENTS

(Squared end bent shown, skewed end bent similar)

Detailed August 2025
Checked August 2025

Note: This drawing is not to scale. Follow dimensions.

STATE OF MISSOURI
RYAN DAVID SHAW
NUMBER PE-2017000368
PROFESSIONAL ENGINEER
THIS SHEET HAS BEEN SIGNED, SEALED AND DATED ELECTRONICALLY

DATE PREPARED	4/1/2026
ROUTE	I-270
STATE	MO
DISTRICT	BR
SHEET NO.	7
COUNTY	ST. LOUIS
JOB NO.	J6I3020D
CONTRACT ID.	
PROJECT NO.	
BRIDGE NO.	A9398

DESCRIPTION

DATE

MISSOURI HIGHWAYS AND TRANSPORTATION COMMISSION

MoDOT

105 WEST CAPITOL
JEFFERSON CITY, MO 65102
1-888-ASK-MODOT (1-888-275-6636)

HDR Engineering, Inc.
1001 Highlands Plaza Drive
Suite 200
St. Louis, MO 63110
314-425-8300
Certificate of Authority: 000856

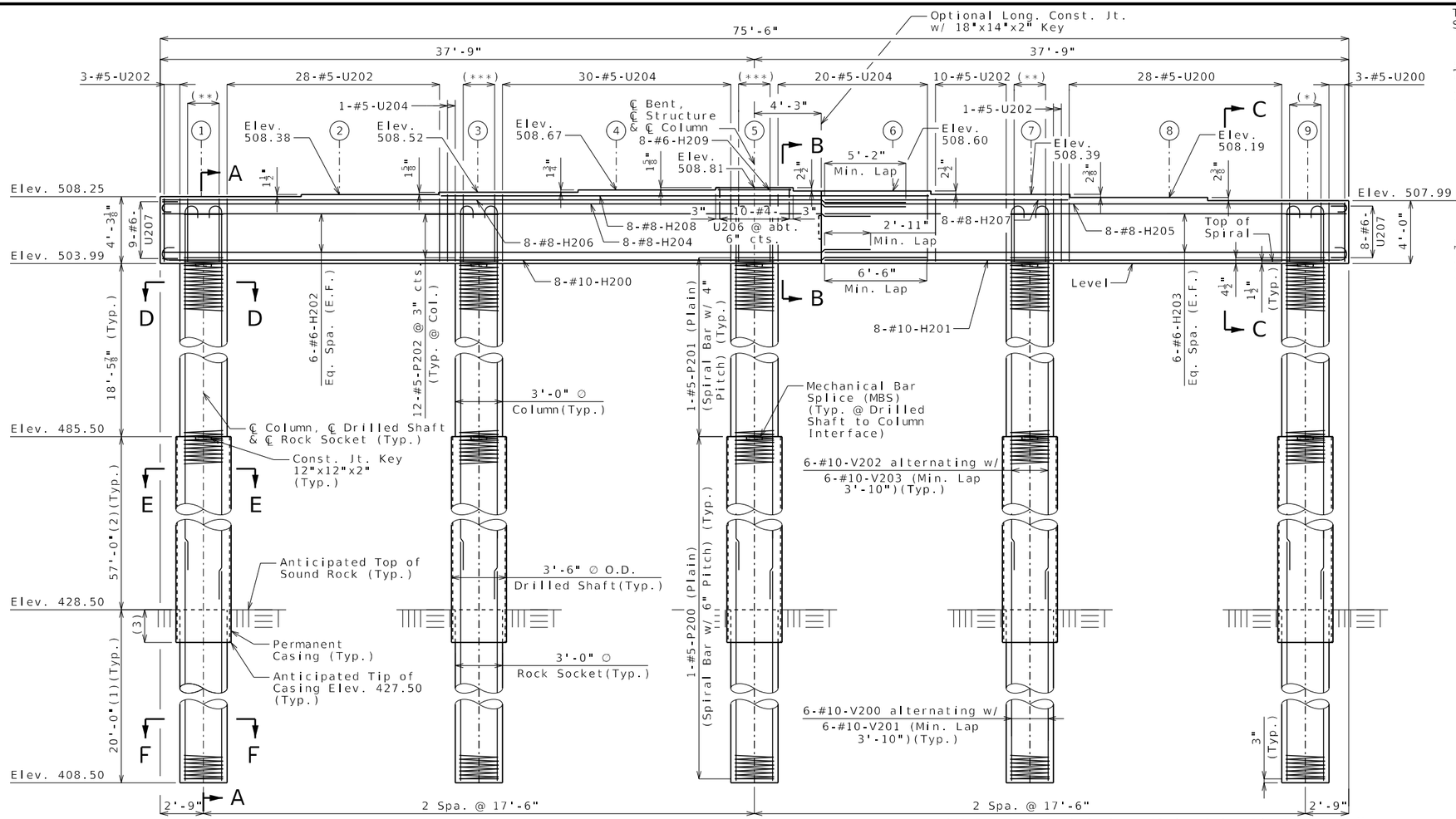

ELEVATION

(Beam keys not shown for clarity.)

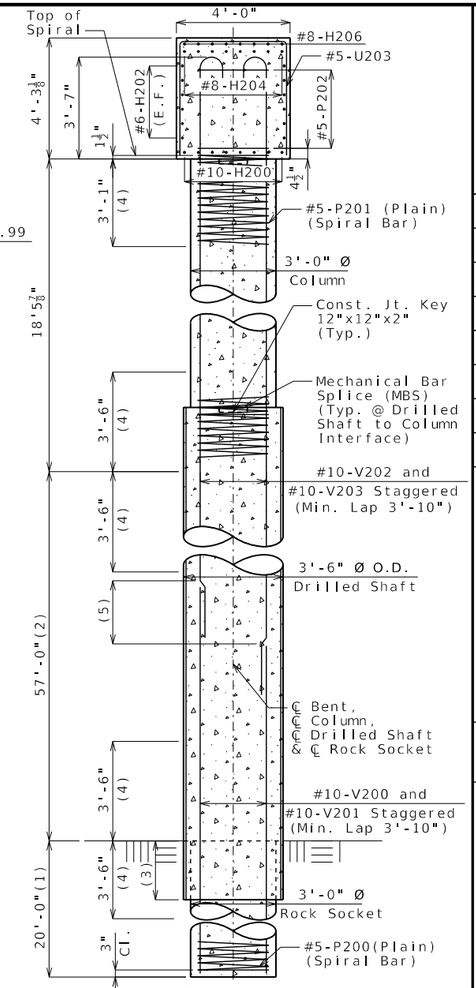

SECTION A-A

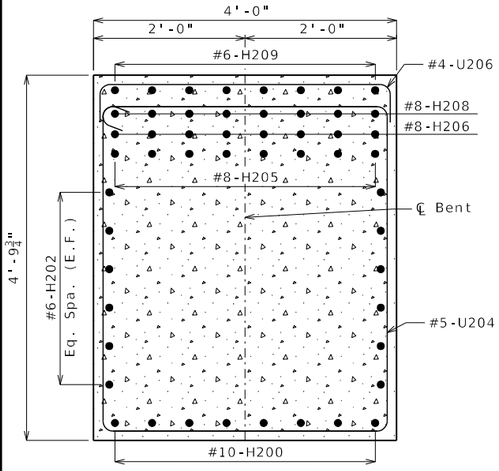

SECTION B-B

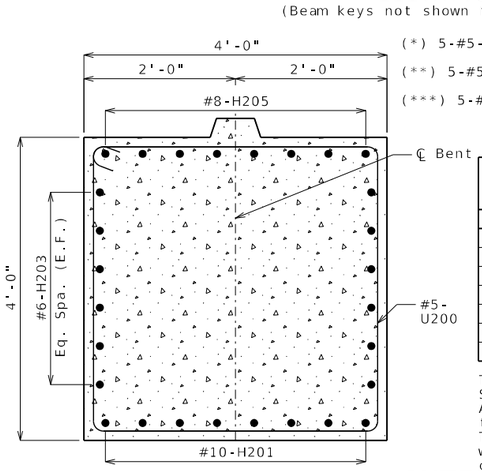

SECTION C-C

(1) Pay Item Rock Sockets (3 ft. 0 in. Dia.)

(2) Pay Item Drilled Shafts (3 ft. 6 in. Dia.)

(3) Set Steel Casing into sound rock in accordance with Sec 701 (Typ.)

(4) Lapping of spiral and vertical reinforcement is not allowed in this zone.

(5) Lap splices and mechanical bar splices, if used, are to be alternately staggered at least 2'-0" at two different locations.

Substructure Quantity Table for Intermediate Bent No. 2

Item		Quantity
Drilled Shafts (3 ft. 6 in. Dia.)	linear foot	285
Rock Sockets (3 ft. 0 in. Dia.)	linear foot	100
Video Camera Inspection	each	5
Foundation Inspection Holes	linear foot	150
Sonic Logging Testing	each	5
Class B Concrete (Substructure)	cu. yard	73.7
Reinforcing Steel (Galvanized)	pound	49,840

These quantities are included in the Estimated Quantities table on Sheet No. 2.
All reinforcement in drilled shafts and rock sockets is included in the substructure quantities.
The cost of any required excavation to the top of the drilled shafts will be considered completely covered by the contract unit price for other items.

Notes:

The hooks of vertical bars embeded in the beam cap shall not be turned outward, away from the column core.

Work this sheet with Sheet No. 9.

Thickness of permanent steel casing shall be in accordance with Sec 701.

An additional 4 feet has been added to V-bar lengths and an additional 4 feet of height has been added to P200 and P201 length in the quantities, if required, for possible change in drilled shaft or rock socket length. The additional V-bar length shall be cut off or included in the reinforcement lap if not required. The additional P-bar length shall be cut off, with allowance for maintaining the required 1-1/2 turns at the end of spiral length. The spiral pitch shall be spaced similarly to that shown in elevation, if required, or to a lesser spacing if not required, but not less than 6-inch centers in the drilled shaft and rock socket.

Resin Anchors for sign support bracket mounted to column shall clear column reinforcing steel. For sign details, see Roadway plans.

Sonic logging testing shall be performed on all drilled shafts and rock sockets.

Mechanical bar splices shall be in accordance with Sec 706 or 710. Payment for mechanical bar splices will be considered completely covered by the contract unit price for other items.

E.F. Denotes Each Face.

(1) - Denotes girder number.

INTERMEDIATE BENT NO. 2 DETAILS

Detailed August 2025
Checked August 2025

Note: This drawing is not to scale. Follow dimensions.

STATE OF MISSOURI
RYAN DAVID SHAW
NUMBER PE-2017003388
PROFESSIONAL ENGINEER
THIS SHEET HAS BEEN SIGNED, SEALED AND DATED ELECTRONICALLY

DATE PREPARED 4/1/2026
ROUTE I-270 | STATE MO
DISTRICT BR | SHEET NO. 8
COUNTY ST. LOUIS
JOB NO. J6I3020D
CONTRACT ID.
PROJECT NO.
BRIDGE NO. A9398

DESCRIPTION | DATE

MISSOURI HIGHWAYS AND TRANSPORTATION COMMISSION
105 WEST CAPITOL
JEFFERSON CITY, MO 65102
1-888-ASK-MODOT (1-888-275-6636)

HDR Engineering, Inc.
1001 Highlands Plaza Drive
Suite 200
St. Louis, MO 63110
314-425-8300
Certificate of Authority: 000856

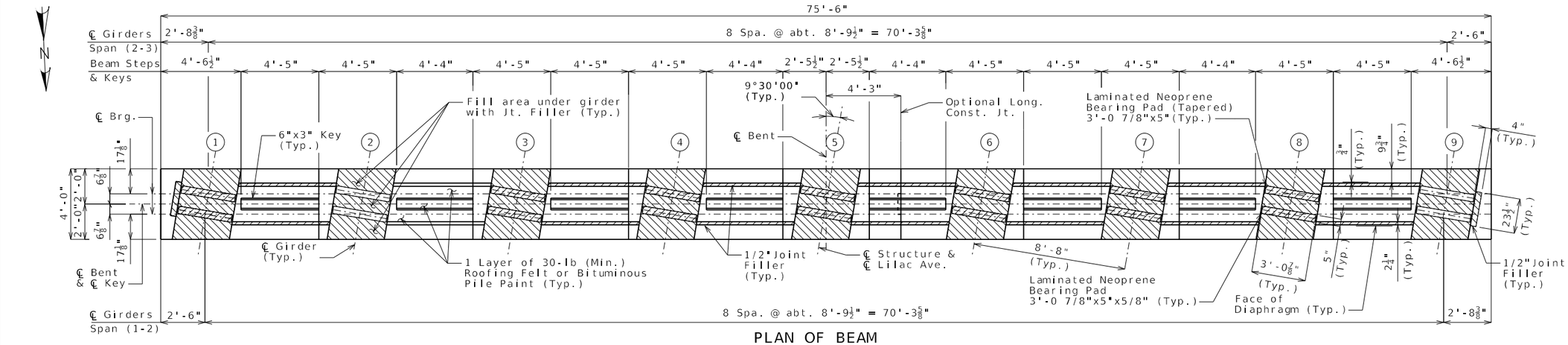

PLAN OF BEAM

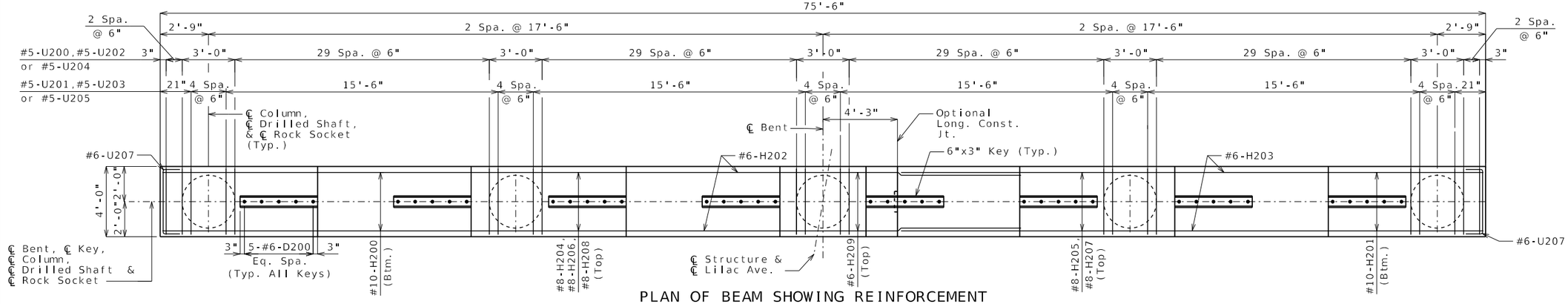

PLAN OF BEAM SHOWING REINFORCEMENT

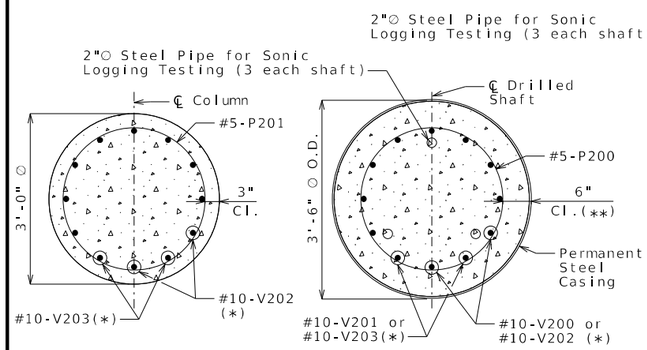

SECTION D-D

SECTION E-E

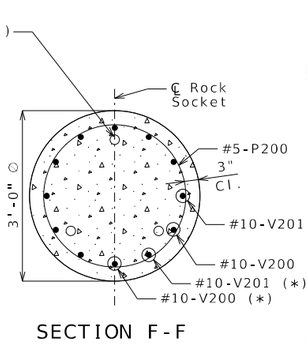

SECTION F-F

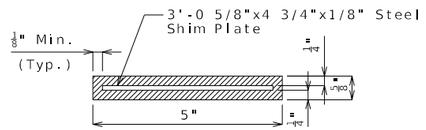

SECTION THRU LAMINATED NEOPRENE BEARING PAD (SPAN (1-2))

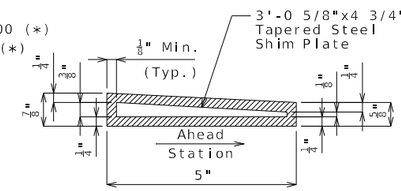

SECTION THRU LAMINATED NEOPRENE BEARING PAD (TAPERED)(SPAN (2-3))

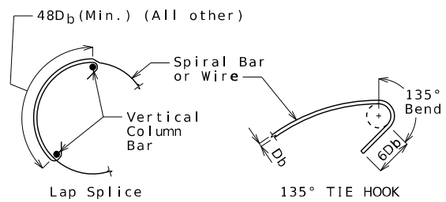

INTERMEDIATE SPLICE OF SPIRALS

Standard 135-degree tie hooks that engage vertical column reinforcing bars shall be provided at each end of splice.

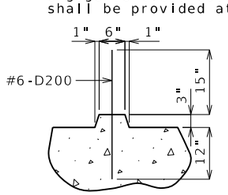

SECTION THRU KEY

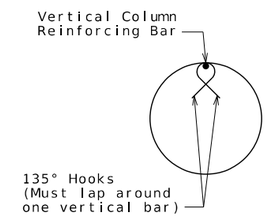

SEISMIC STIRRUP BAR

Note: Seismic hoop hooks shall be staggered around the column at about one-third of the hoop circumference.

(*) At Contractor's option, vertical column/drilled shaft bars may be spliced by mechanical coupler in the allowable splice zone. Splices shall be staggered a min. 2'-0" in an alternating pattern.

(**) To outside of casing.

Notes:

When contractor uses MBS for column and drilled shaft vertical reinforcement, contractor shall increase diameter of stirrup bars and seismic bars spiral/hoop as needed at the MBS locations. No additional payment will be made for this adjustment. Stirrup bars and seismic bars shall not be shifted to create large gaps to avoid MBS.

Work this sheet with Sheet No. 8.

For Diaphragm Details, see Sheet No. 16.

For steps of 2 inches or more, use 2 1/4x1/2 inch Joint Filler up vertical face.

(1) - Denotes girder number.

INTERMEDIATE BENT NO. 2 DETAILS

Detailed August 2025
Checked August 2025

Note: This drawing is not to scale. Follow dimensions.

STATE OF MISSOURI
RYAN DAVID SHAW
NUMBER PE-2017003888
PROFESSIONAL ENGINEER
THIS SHEET HAS BEEN SIGNED, SEALED AND DATED ELECTRONICALLY

DATE PREPARED
4/1/2026

ROUTE	STATE
I-270	MO
DISTRICT	SHEET NO.
BR	9

COUNTY
ST. LOUIS

JOB NO.
J6I3020D

CONTRACT ID.

PROJECT NO.

BRIDGE NO.
A9398

DESCRIPTION

DATE

MISSOURI HIGHWAYS AND TRANSPORTATION COMMISSION
105 WEST CAPITOL
JEFFERSON CITY, MO 65102
1-888-ASK-MODOT (1-888-275-6636)

HDR Engineering, Inc.
1001 Highlands Plaza Drive
Suite 200
St. Louis, MO 63110
314-425-8300
Certificate of Authority: 000856

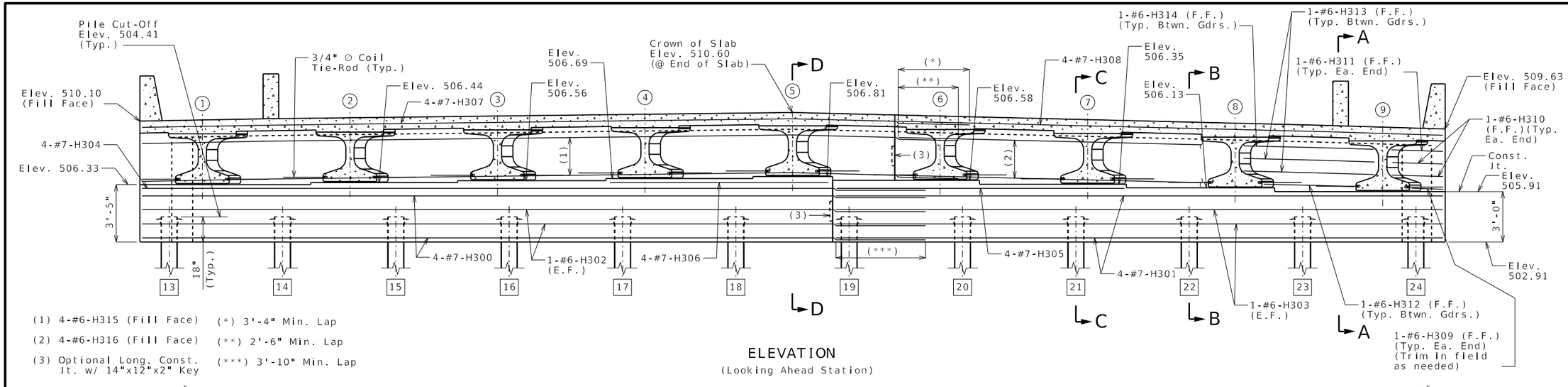

(1) 4-#6-H315 (Fill Face)
(2) 4-#6-H316 (Fill Face)
(3) Optional Long. Const. Jt. w/ 14"x12"x2" Key

(*) 3'-4" Min. Lap
(**) 2'-6" Min. Lap
(***) 3'-10" Min. Lap

ELEVATION

(Looking Ahead Station)

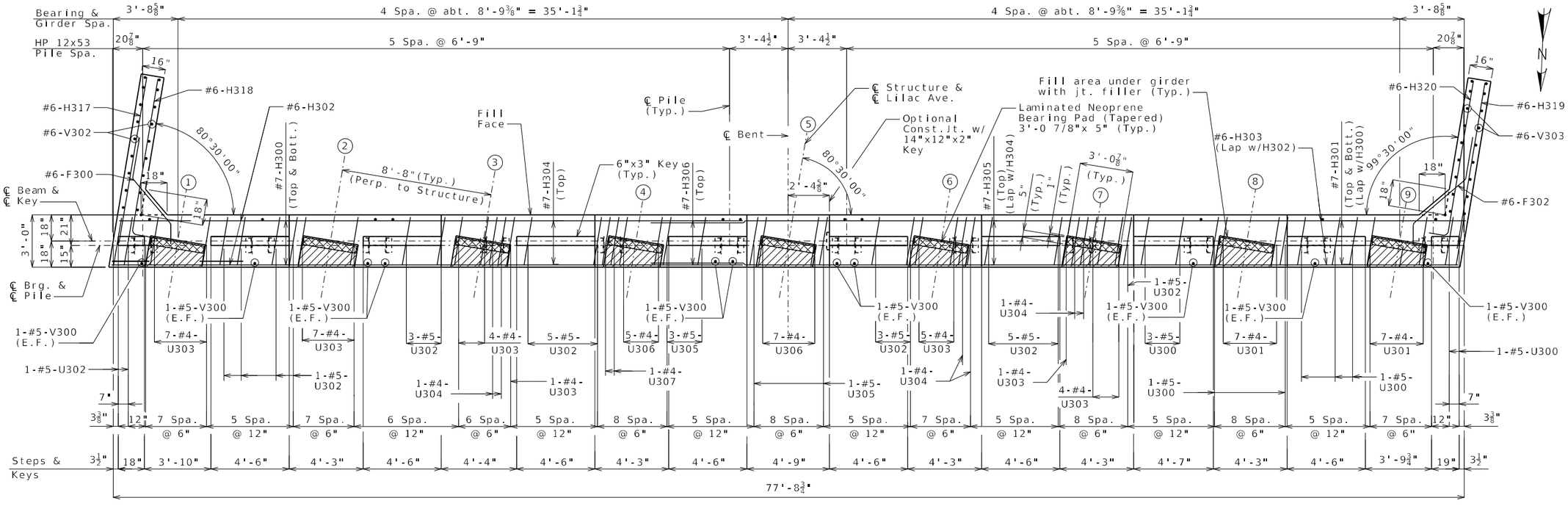

PLAN OF BEAM

(Horizontal dimensions are measured along ℄ Piles and ℄ Brg.)

Substructure Quantity Table for End Bent No. 3		
Item		Quantity
Galvanized Structural Steel Piles (12 in.)	linear foot	960
Pile Point Reinforcement	each	12
Class B Concrete (Substructure)	cu. yard	33.2
Pipe Pile Spacers	each	12

These quantities are included in the Estimated Quantities table on Sheet No. 2.

Notes:

Work this sheet with Sheets No. 11 & 12.

For Sections A-A thru C-C, see Sheet No. 11.

For Section D-D, see Sheet No. 12.

For Key Details, Pile Anchor Details and Steel Splice Detail, see Sheet No. 12.

For location of coil tie rods, see Sheets No. 14 & 15.

Notes (Cont.):

Reinforcing steel shall be shifted to clear piles. U-bars shall clear piles by at least 1 1/2 inches.

Strands at ends of girders shall be field bent or, if necessary, cut in field to maintain 1 1/2 inch minimium clearance to fill face of end bent.

All concrete in the end bent above top of beam and below top of slab shall be Class B-2.

Notes (Cont.):

#6-F300 and #6-F302 bars shall be bent in field to clear girders.

The U-bars, pairs of V-bars and #5-H326 bars shall be placed parallel to centerline of roadway.

For details and reinforcement of barriers at end bent, see Sheet No. 23.

E.F. Denotes Each Face.

F.F. Denotes Front Face.

(1) - Denotes girder number.

[13] - Denotes pile number.

END BENT NO. 3 DETAILS

Detailed August 2025
Checked August 2025

Note: This drawing is not to scale. Follow dimensions.

STATE OF MISSOURI
RYAN DAVID SHAW
NUMBER PE-2017003388
PROFESSIONAL ENGINEER
THIS SHEET HAS BEEN SIGNED, SEALED AND DATED ELECTRONICALLY

DATE PREPARED 4/1/2026

ROUTE	STATE
I-270	MO
DISTRICT	SHEET NO.
BR	10

COUNTY: ST. LOUIS
JOB NO.: J6I3020D
CONTRACT ID.:
PROJECT NO.:
BRIDGE NO.: A9398

DESCRIPTION | DATE

MISSOURI HIGHWAYS AND TRANSPORTATION COMMISSION
105 WEST CAPITOL
JEFFERSON CITY, MO 65102
1-888-ASK-MODOT (1-888-275-6636)

HDR Engineering, Inc.
1001 Highlands Plaza Drive
Suite 200
St. Louis, MO 63110
314-425-8300
Certificate of Authority: 000856

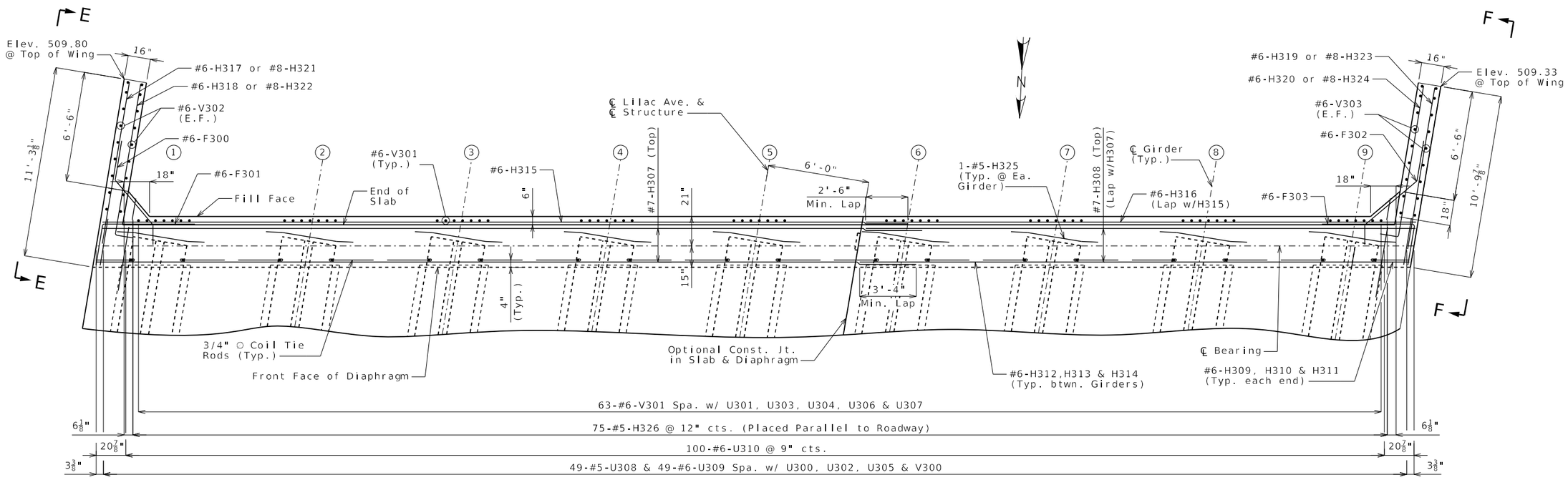

PART PLAN

(Horizontal dimensions are measured along ℄ Brg.)

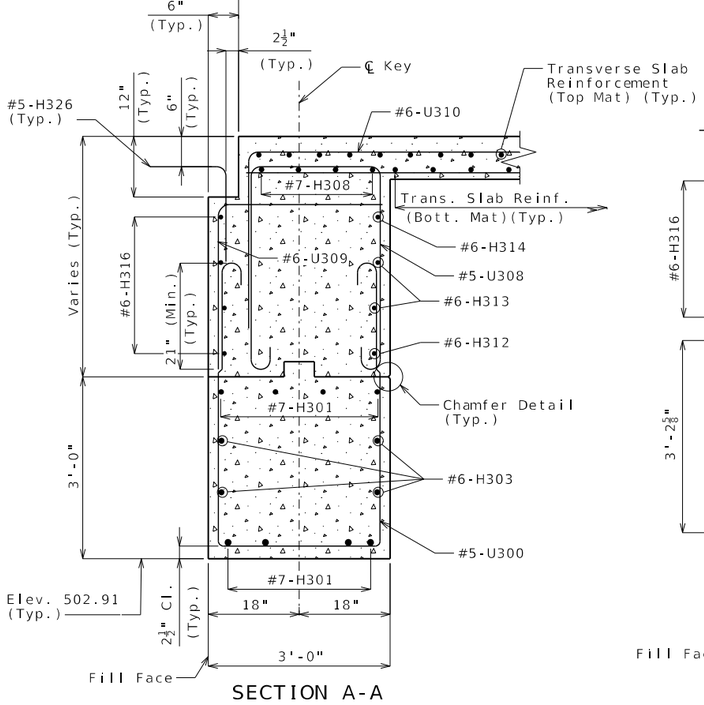

SECTION A-A

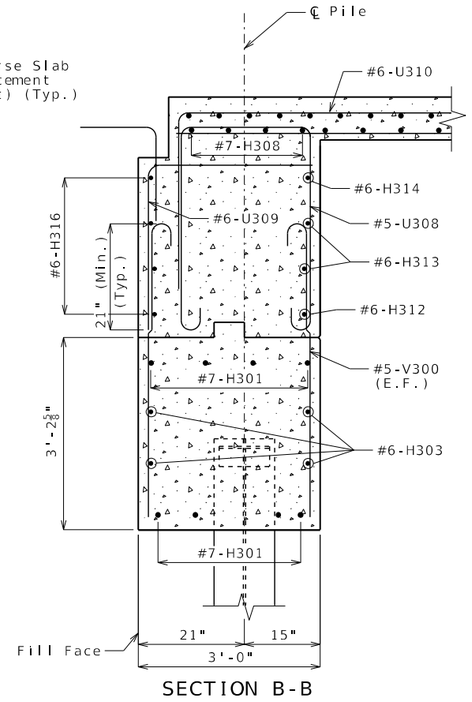

SECTION B-B

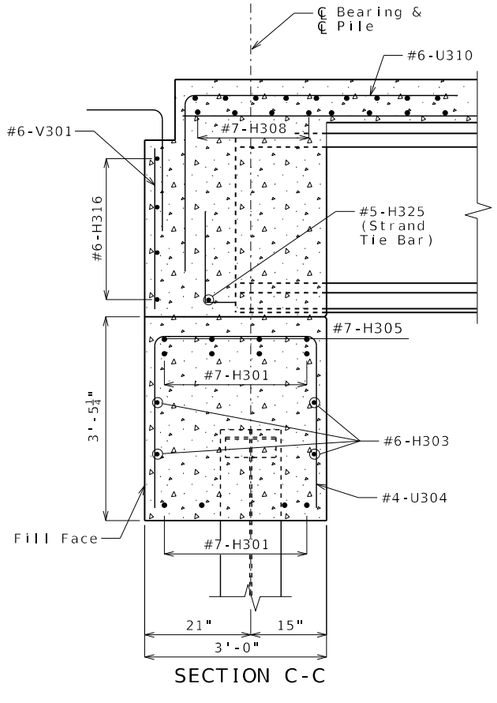

SECTION C-C

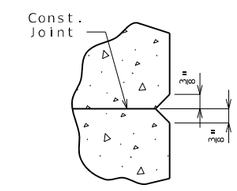

CHAMFER DETAIL

Notes:

Work this sheet with Sheets No. 10 & 12.

#6-F300 and #6-F302 bars shall be bent in the field to clear girders.

The U-bars and #5-H326 bars shall be placed parallel to centerline roadway.

For location of Sections A-A thru C-C, see Sheet No. 10.

For Section D-D, see Sheet No. 12.

For Elevations E-E and F-F, see Sheet No. 12.

For Key details, Pile Anchor details and Pile Splice details, see Sheet No. 12.

For location of coil tie rods and #5-H325 (strand tie bar), see Sheets No. 14 & 15.

For details and reinforcement of barriers at end bent, see Sheet No. 23.

E.F. Denotes Each Face.

(1) - Denotes girder number.

END BENT NO. 3 DETAILS

Detailed August 2025
Checked August 2025

Note: This drawing is not to scale. Follow dimensions.

STATE OF MISSOURI
RYAN DAVID SHAW
NUMBER PE-2017000368
PROFESSIONAL ENGINEER
THIS SHEET HAS BEEN SIGNED, SEALED AND DATED ELECTRONICALLY

DATE PREPARED	4/1/2026
ROUTE I-270	STATE MO
DISTRICT BR	SHEET NO. 11
COUNTY	ST. LOUIS
JOB NO.	J6I3020D
CONTRACT ID.	
PROJECT NO.	
BRIDGE NO.	A9398

DESCRIPTION

DATE

MISSOURI HIGHWAYS AND TRANSPORTATION COMMISSION

MoDOT

105 WEST CAPITOL
JEFFERSON CITY, MO 65102
1-888-ASK-MODOT (1-888-275-6636)

HDR Engineering, Inc.
1001 Highlands Plaza Drive
Suite 200
St. Louis, MO 63110
314-425-8300
Certificate of Authority: 000856

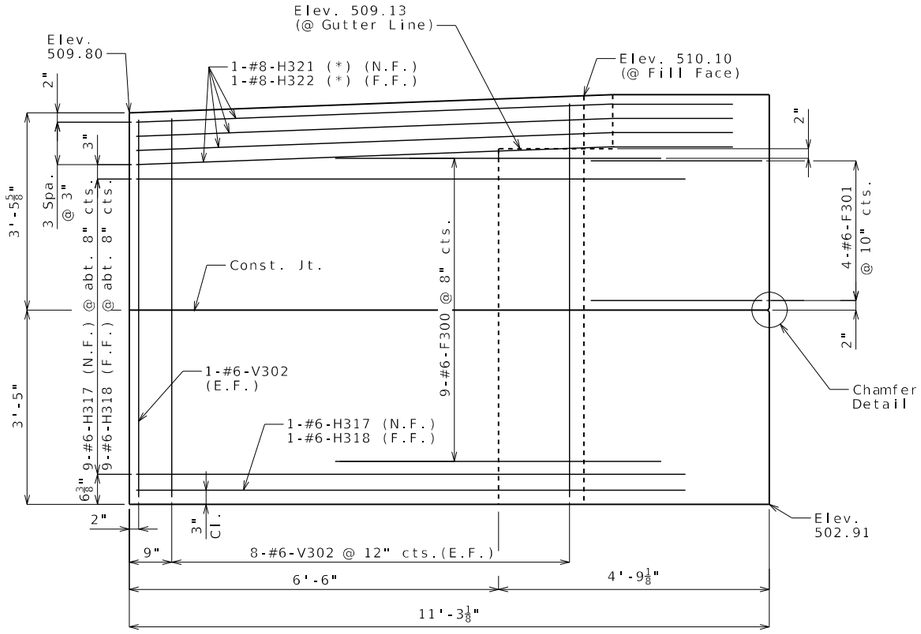

SECTION E-E

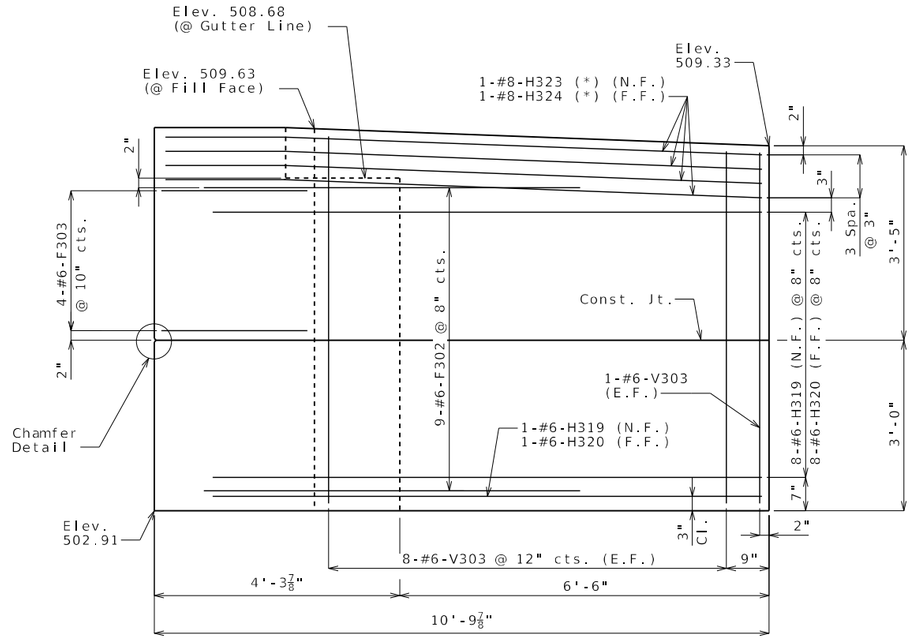

SECTION F-F

Notes: All dimensions and elevations given at outside face of wing.

The #6-F300 and #6-F302 bars shall be bent in the field to clear girders.

(*) Place with grade.

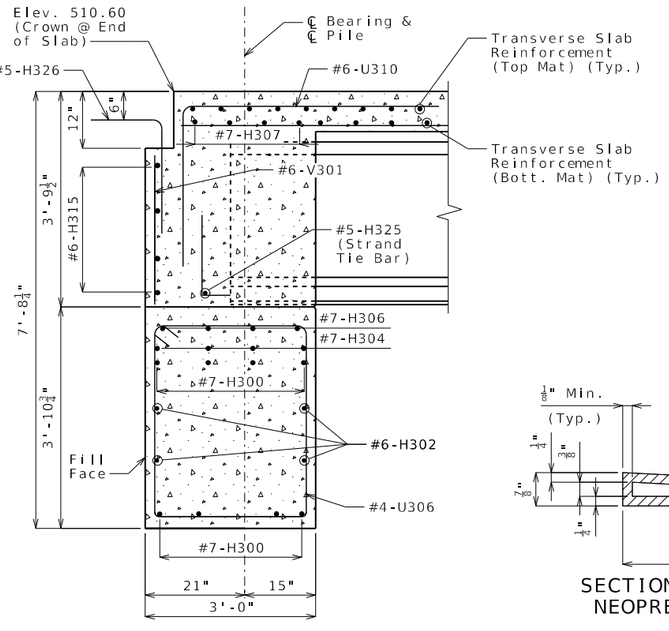

SECTION D-D

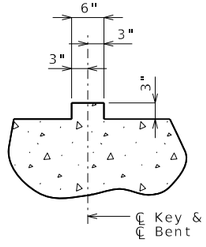

TYPICAL SECTION THRU KEY

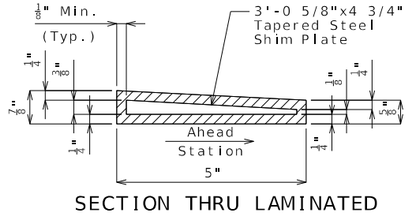

SECTION THRU LAMINATED NEOPRENE BEARING PAD (TAPERED)

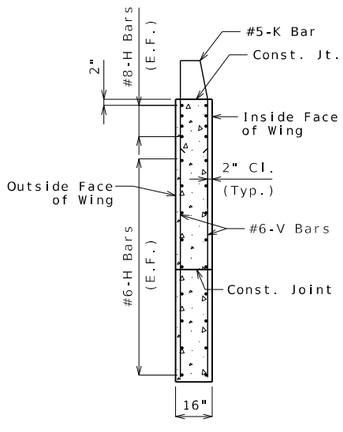

TYPICAL SECTION THRU WING

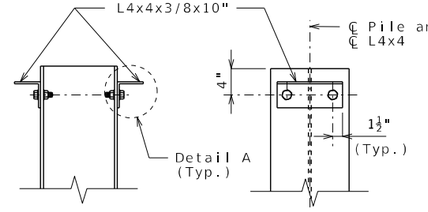

DETAILS OF HP PILE ANCHORS

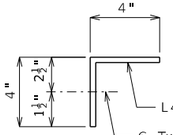

DETAIL A

Angles shall be coated with a minimum of two coats of non-aluminum epoxy mastic primer to provide a dry film thickness of 4 mils minimum, 8 mils maximum, or galvanized in accordance with Sec 1081. Bolts, washers and nuts shall be galvanized in accordance with AASHTO M 232 (ASTM A153), Class C.

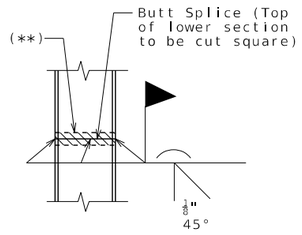

STEEL PILE SPLICE

(If required)

(**) Galvanizing material shall be omitted or removed one inch clear of weld locations in accordance with Sec 702.

Notes:

Work this sheet with Sheets No. 10 & 11.

For Chamfer Detail, see Sheet No. 11.

For location of Section D-D, see Sheet No. 10.

For location of Elevations E-E and F-F, see Sheet No. 11.

For details and reinforcement of barriers at end bent, see Sheet No. 23.

E.F. Denotes Each Face.

F.F. Denotes Far Face.

N.F. Denotes Near Face.

END BENT NO. 3 DETAILS

Detailed August 2025
Checked August 2025

Note: This drawing is not to scale. Follow dimensions.

STATE OF MISSOURI
RYAN DAVID SHAW
NUMBER PE-2017003388
PROFESSIONAL ENGINEER
THIS SHEET HAS BEEN SIGNED, SEALED AND DATED ELECTRONICALLY

DATE PREPARED 4/1/2026
ROUTE I-270 | STATE MO
DISTRICT BR | SHEET NO. 12
COUNTY ST. LOUIS
JOB NO. J6I3020D
CONTRACT ID.
PROJECT NO.
BRIDGE NO. A9398

DESCRIPTION | DATE

MISSOURI HIGHWAYS AND TRANSPORTATION COMMISSION
105 WEST CAPITOL
JEFFERSON CITY, MO 65102
1-888-ASK-MODOT (1-888-275-6636)

HDR Engineering, Inc.
1001 Highlands Plaza Drive
Suite 200
St. Louis, MO 63110
314-425-8300
Certificate of Authority: 000856

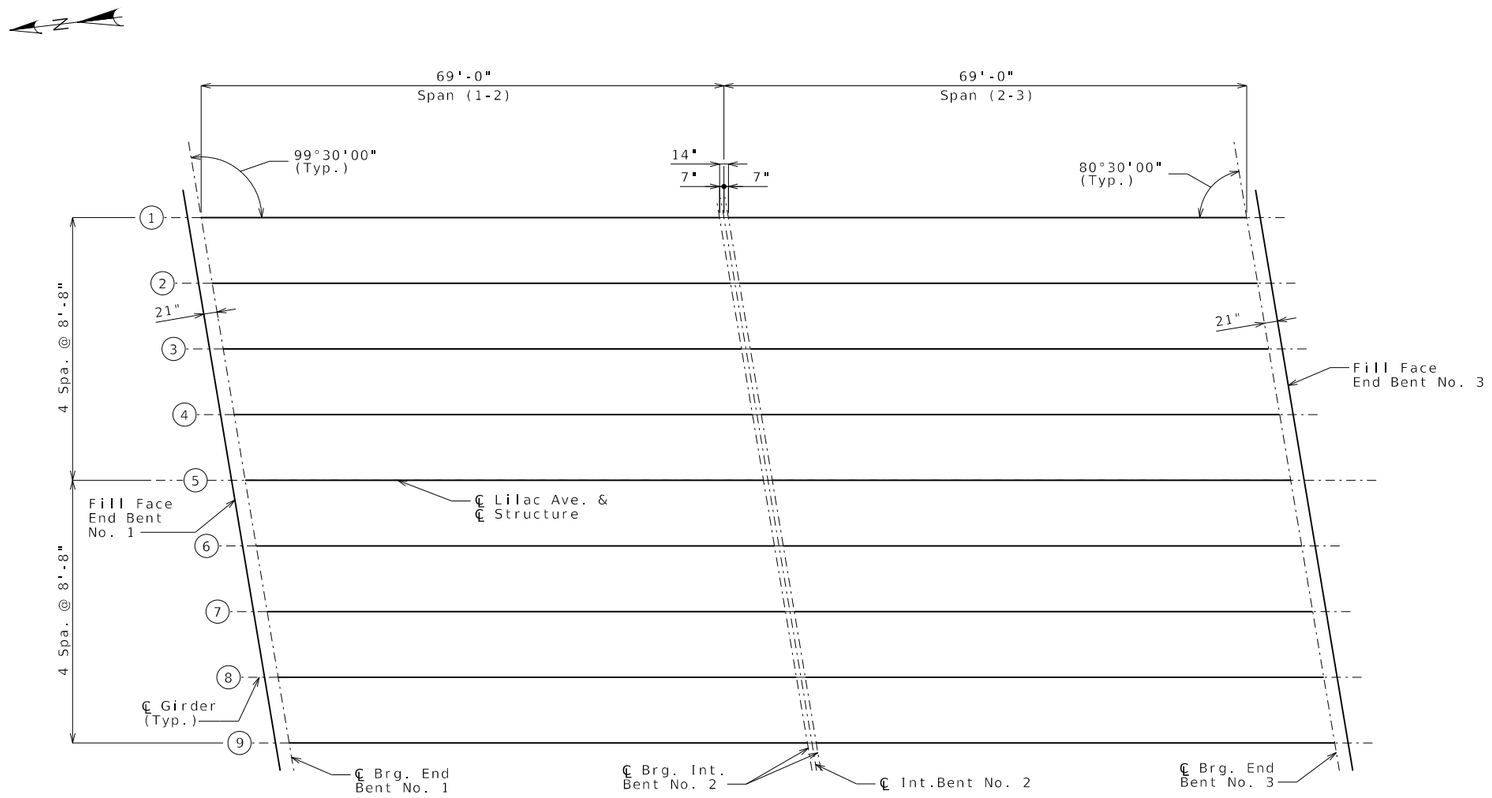

PLAN SHOWING PRESTRESSED CONCRETE NU-GIRDER LAYOUT

GIRDER LAYOUT

Notes:

All longitudinal dimensions are measured horizontal.

All girders are parallel.

(1) - Denotes girder number.

Detailed August 2025
Checked August 2025

Note: This drawing is not to scale. Follow dimensions.

c:\pwworking\central01\d4954830\B_A9398_013_J6I3020D.dgn 2:35:07 PM 4/1/2026

RYAN DAVID SHAW
NUMBER PE-2017002368
STATE OF MISSOURI
PROFESSIONAL ENGINEER
THIS SHEET HAS BEEN SIGNED, SEALED AND DATED ELECTRONICALLY

DATE PREPARED
4/1/2026

ROUTE	STATE
I-270	MO
DISTRICT	SHEET NO.
BR	13

COUNTY
ST. LOUIS

JOB NO.
J6I3020D

CONTRACT ID.

PROJECT NO.

BRIDGE NO.
A9398

DESCRIPTION	DATE

MISSOURI HIGHWAYS AND TRANSPORTATION COMMISSION
105 WEST CAPITOL
JEFFERSON CITY, MO 65102
1-888-ASK-MODOT (1-888-275-6636)

HDR Engineering, Inc.
1001 Highlands Plaza Drive
Suite 200
St. Louis, MO 63110
314-425-8300
Certificate of Authority: 000856

(1) Fabricator shall apply a bond breaker to this region.

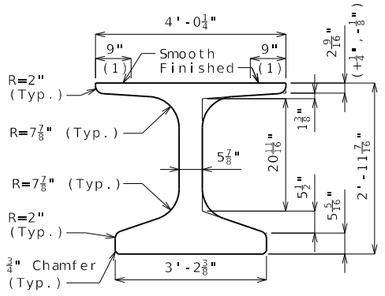

DIMENSIONS

(2) Outer strands tensioned to 2.02 kips/strand and inner strands to 8 kips/strand. Placed symmetrical about ℄ Girder. May be moved laterally in pairs.

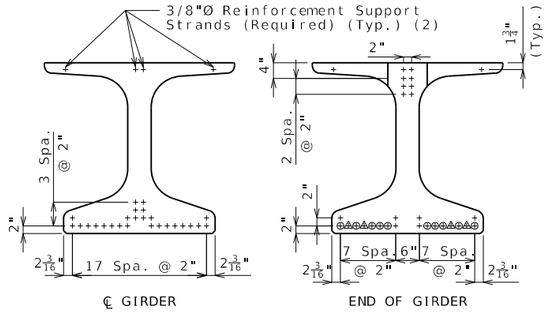

STRAND ARRANGEMENT

+ Indicates prestressing strand.

○ Indicates cut & shop bend with 3'-0" projection.

△ Indicates debonded for 2'-0" from end of girder.

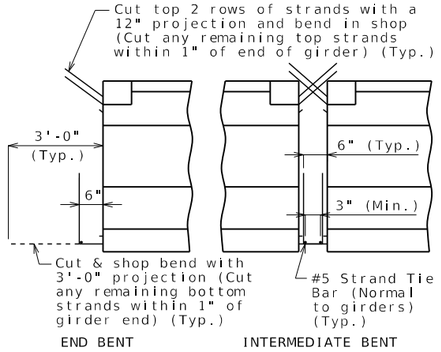

STRANDS AT GIRDER ENDS

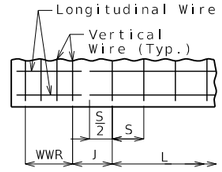

WELDED WIRE PLACEMENT

S = Vertical wire spacing

L = Length of WWR mats

J = Distance between WWR mats

Bill of Reinforcing Steel

Bars Each Girder

No.	Size/Mark	Length	Shape
90	3 G1	2'-10"	8
2	4 G3	3'-10"	20
2	4 G4	2'-3"	20
2	4 G5	2'-8"	20
2	4 G6	3'-10"	20

Welded Wire Each Girder

Mark	Size	S	W	L	J
WWR1	D31	4"	W12	4'-0"	8"
WWR2	D31	8"	W12	6'-8"	10¼"
WWR3	D31	12"	W12	41'-0"	--
WWR6	D31	2"	W12	16"	4"

Bending Diagrams

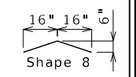

Shape 20

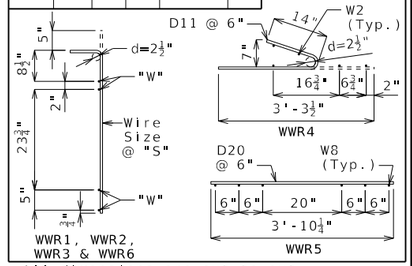

All dimensions are out to out.

Hooks and bends shall be in accordance with the CRSI Manual of Standard Practice for Detailing Reinforced Concrete Structures, Stirrup and Tie Dimensions.

Actual bar lengths are measured along centerline of bar to the nearest inch.

Minimum clearance to reinforcing shall be 1", unless otherwise shown.

All bar reinforcement shall be ASTM A706 Grade 60.

WWR shall not be epoxy coated.

G4 and G5 not required for interior girders. Half no. of G3, G4, G5 and G6 not required for ext. girders of end spans.

General Notes:

Concrete for prestressed beams shall be Class A-1 with f'c = 8000 psi and f'ci = 6500 psi.

Use 26 strands, 0.6"Ø Grade 270, with an initial prestress force of 1142 kips.

Pretensioned members shall be in accordance with Sec 1029.

Fabricator shall be responsible for location and design of lifting devices.

Exterior and interior girders are the same except: coil ties, top flange blockout and holes for sign support bracket (Girder No. 1, Span (1-2) & Girder No. 9 (Span (2-3)).

The contractor shall provide bracing necessary for lateral and torsional stability of the girders during construction of the concrete slab and remove the bracing after the slab has attained 75% design strength. Contractor shall not drill holes in the girders.

For Girder Camber Diagram, see Sheet No. 17.

For location of coil ties at concrete diaphragms and integral bents, see Sheets No. 4-5, 10-11 and 16.

Alternate bar reinforcing steel details are provided and may be used. The same type of reinforcing steel shall be used for all girders in all spans.

For Sign Support details, see Sheets No. 27-29.

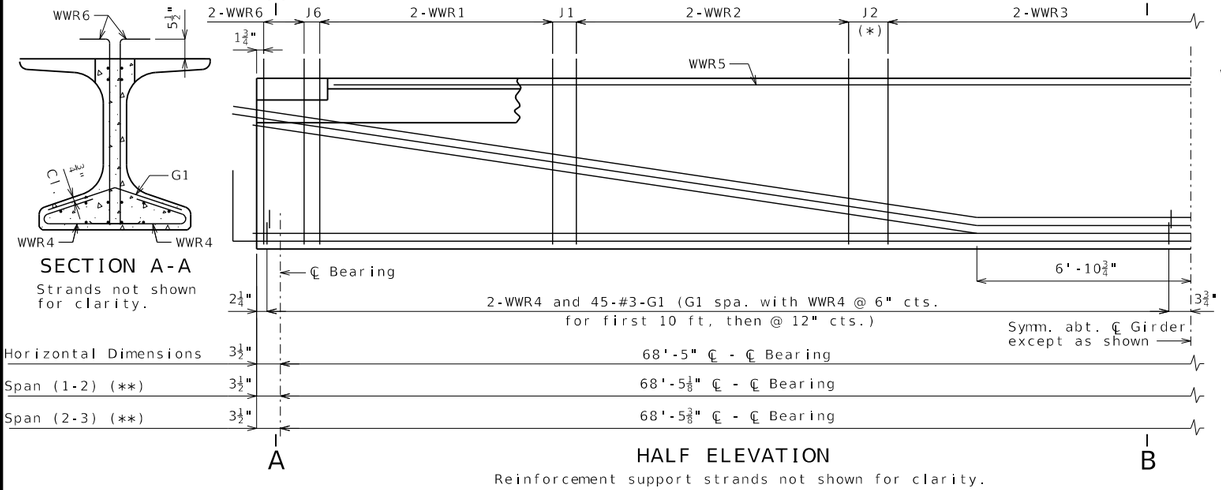

(*) Reinforcement spacing shown is based on horizontal girder dimensions. Adjust "J2" dimension as required for girder dimensions along grade.

(**) Dimensions along grade

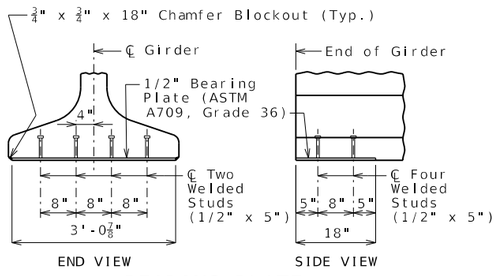

BEARING PLATE

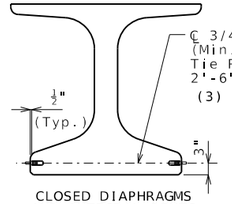

CLOSED DIAPHRAGMS AND INTEGRAL BENTS

COIL TIES

Exclude coil tie at exterior face of exterior girders except at integral end bents.

(3) 2'-1" at exterior face of exterior girders at end bents.

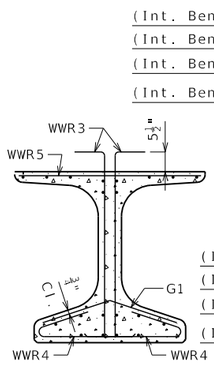

SECTION B-B

Strands not shown for clarity.

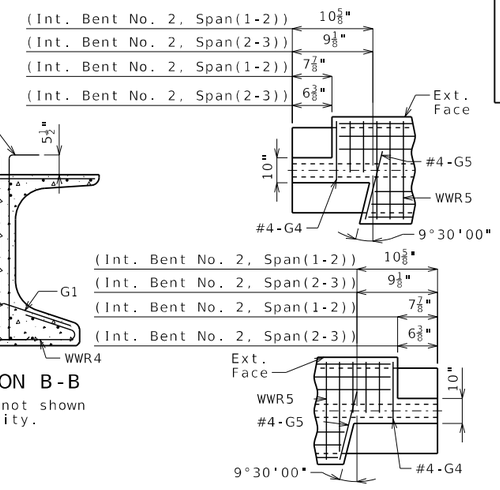

LEFT EXTERIOR GIRDER AT INTERMEDIATE BENT

Rotate 180° for right ext.

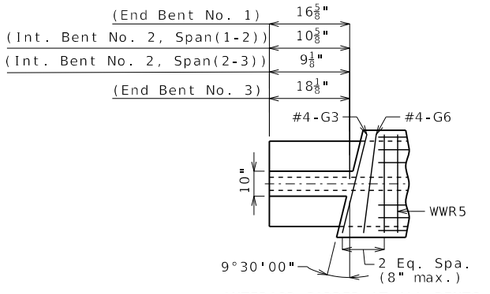

INTERIOR GIRDER AT ALL BENTS & EXTERIOR GIRDER AT END BENT

TOP FLANGE BLOCKOUT

Mirror for right advanced.

NU-GIRDERS - SPANS (1-2) AND (2-3)

Detailed August 2025
Checked August 2025

Note: This drawing is not to scale. Follow dimensions.

STATE OF MISSOURI
RYAN DAVID SHAW
NUMBER PE-2010000000
PROFESSIONAL ENGINEER
THIS SHEET HAS BEEN SIGNED, SEALED AND DATED ELECTRONICALLY

DATE PREPARED 4/1/2026
ROUTE I-270 | STATE MO
DISTRICT BR | SHEET NO. 14
COUNTY ST. LOUIS
JOB NO. J6I3020D
CONTRACT ID.
PROJECT NO.
BRIDGE NO. A9398

DESCRIPTION | DATE

MISSOURI HIGHWAYS AND TRANSPORTATION COMMISSION
105 WEST CAPITOL
JEFFERSON CITY, MO 65102
1-888-ASK-MODOT (1-888-275-6636)
HDR Engineering, Inc.
1001 Highlands Plaza Drive
Suite 200
St. Louis, MO 63110
314-425-8300
Certificate of Authority: 000856

(1) Fabricator shall apply a bond breaker to this region.

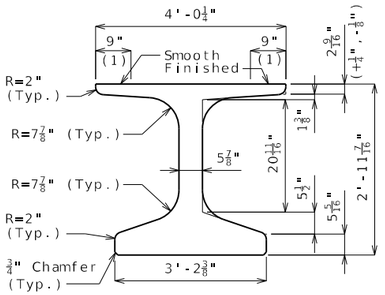

DIMENSIONS

(2) Outer strands tensioned to 2.02 kips/strand and inner strands to 8 kips/strand. Placed symmetrical about ℄ Girder. May be moved laterally in pairs.

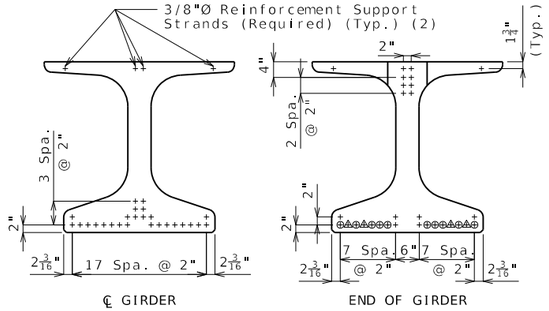

STRAND ARRANGEMENT

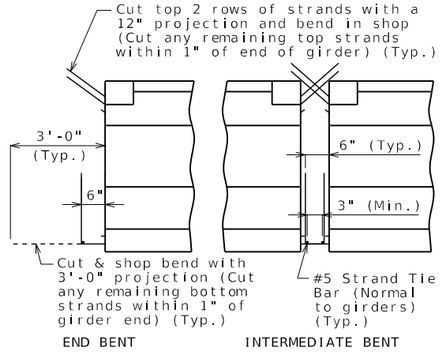

STRANDS AT GIRDER ENDS

\+ Indicates prestressing strand.

○ Indicates cut & shop bend with 3'-0" projection.

△ Indicates debonded for 2'-0" from end of girder.

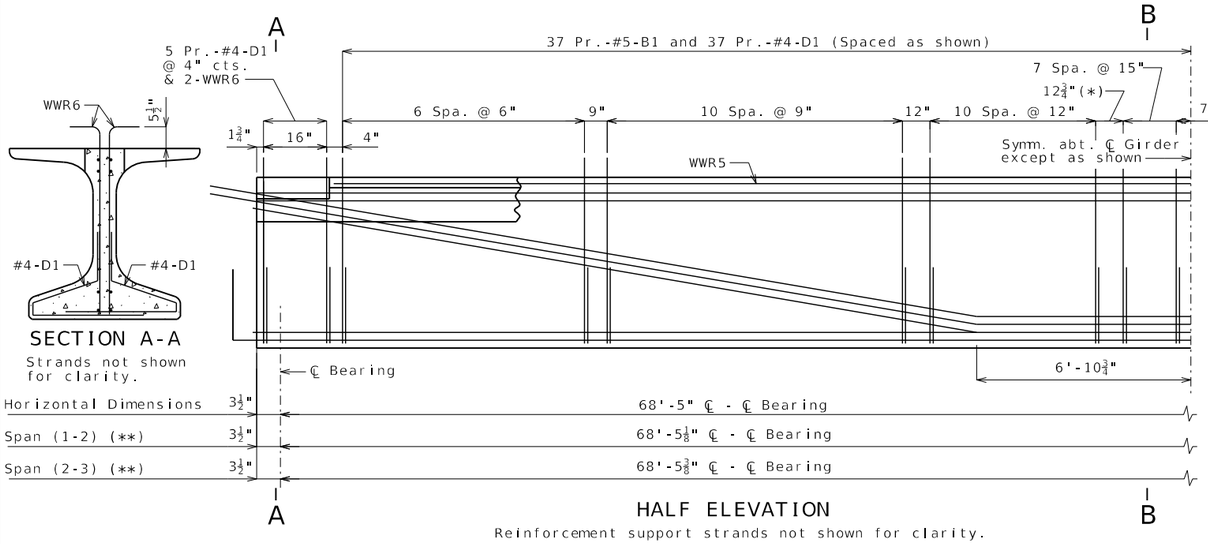

SECTION A-A

Strands not shown for clarity.

HALF ELEVATION

Reinforcement support strands not shown for clarity.

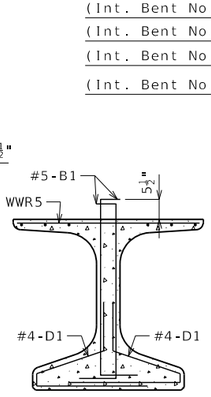

SECTION B-B

Strands not shown for clarity.

LEFT EXTERIOR GIRDER AT INTERMEDIATE BENT

Rotate 180° for right ext.

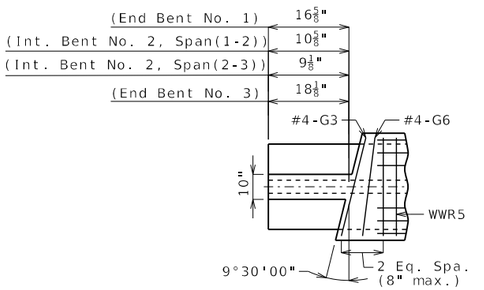

INTERIOR GIRDER AT ALL BENTS & EXTERIOR GIRDER AT END BENT

TOP FLANGE BLOCKOUT

Mirror for right advanced.

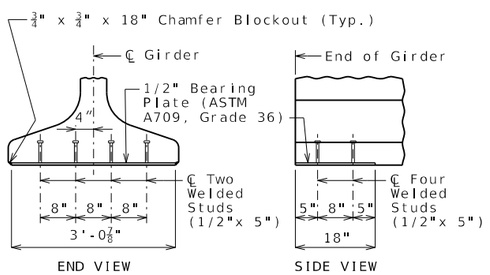

BEARING PLATE

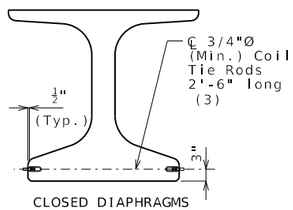

CLOSED DIAPHRAGMS AND INTEGRAL BENTS

COIL TIES

Exclude coil tie at exterior face of exterior girders except at integral end bents.

(3) 2'-1" at exterior face of exterior girders at end bents

(*) Reinforcement spacing shown is based on horizontal girder dimensions. Adjust dimension as required for girder dimensions along grade.

(**) Dimensions along grade

Bill of Reinforcing Steel - Each Girder

No.	Size/ Mark	Length	Shape
148	5 B1	4'-4"	11S
168	4 D1	4'-0"	9S
2	4 G3	3'-10"	20
2	4 G4	2'-3"	20
2	4 G5	2'-8"	20
2	4 G6	3'-10"	20

Bending Diagrams

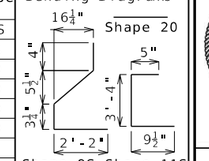

Welded Wire Reinforcement - Each Girder

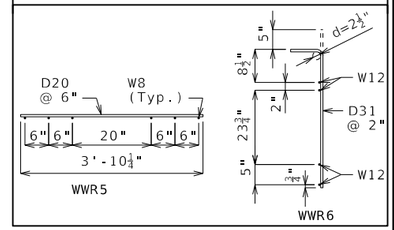

All dimensions are out to out.

Hooks and bends shall be in accordance with the CRSI Manual of Standard Practice for Detailing Reinforced Concrete Structures, Stirrup and Tie Dimensions.

Actual bar lengths are measured along centerline of bar to the nearest inch.

Minimum clearance to reinforcing shall be one inch.

All bar reinforcement shall be ASTM A706 Grade 60.

The two D1 bars may be furnished as one bar at the fabricator's option.

All B1 bars shall be epoxy coated. G4 and G5 not required for interior girders. Half no. of G3, G4, G5 and G6 not required for ext. girders of end spans.

General Notes:

Concrete for prestressed girders shall be Class A-1 with f'c = 8000 psi and f'ci = 6500 psi.

Use 26 strands, 0.6"Ø Grade 270, with an initial prestress force of 1142 kips.

Pretensioned members shall be in accordance with Sec 1029.

Fabricator shall be responsible for location and design of lifting devices.

Exterior and interior girders are the same except: coil ties, top flange blockout and holes for sign support bracket (Girder No. 1, Span (1-2) & Girder No. 9, Span (2-3)).

The contractor shall provide bracing necessary for lateral and torsional stability of the girders during construction of the concrete slab and remove the bracing after the slab has attained 75% design strength. Contractor shall not drill holes in the girders.

For Girder Camber Diagram, see Sheet No. 17.

For location of coil ties at concrete diaphragms and integral bents, see Sheets No. 4-5, 10-11 and 16.

Alternate bar reinforcing steel details are provided and may be used. The same type of reinforcing steel shall be used for all girders in all spans.

For Sign Support details, see Sheets No. 27-29.

STATE OF MISSOURI
RYAN DAVID SHAW
NUMBER PE-2017000388
PROFESSIONAL ENGINEER
THIS SHEET HAS BEEN SIGNED, SEALED AND DATED ELECTRONICALLY

DATE PREPARED 4/1/2026

ROUTE I-270 | STATE MO

DISTRICT BR | SHEET NO. 15

COUNTY ST. LOUIS

JOB NO. J6I3020D

CONTRACT ID.

PROJECT NO.

BRIDGE NO. A9398

DESCRIPTION | DATE

MISSOURI HIGHWAYS AND TRANSPORTATION COMMISSION
105 WEST CAPITOL
JEFFERSON CITY, MO 65102
1-888-ASK-MODOT (1-888-275-6636)

HDR Engineering, Inc.
1001 Highlands Plaza Drive
Suite 200
St. Louis, MO 63110
314-425-8300
Certificate of Authority: 000856

Detailed August 2025
Checked August 2025

NU-GIRDERS (ALTERNATE REINFORCEMENT) - SPANS (1-2) AND (2-3)

Note: This drawing is not to scale. Follow dimensions.

c:\pwworking\central01\d4954830\B_A9398_015_J6I3020D.dgn 2:35:20 PM 4/1/2026

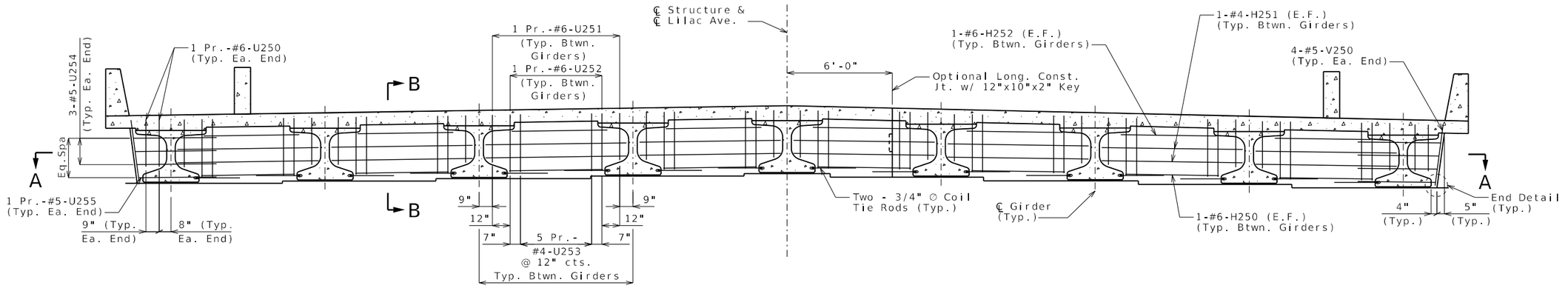

SECTION NEAR INTERMEDIATE BENT
(Looking Ahead Station)
(Normal to ℄ Structure)

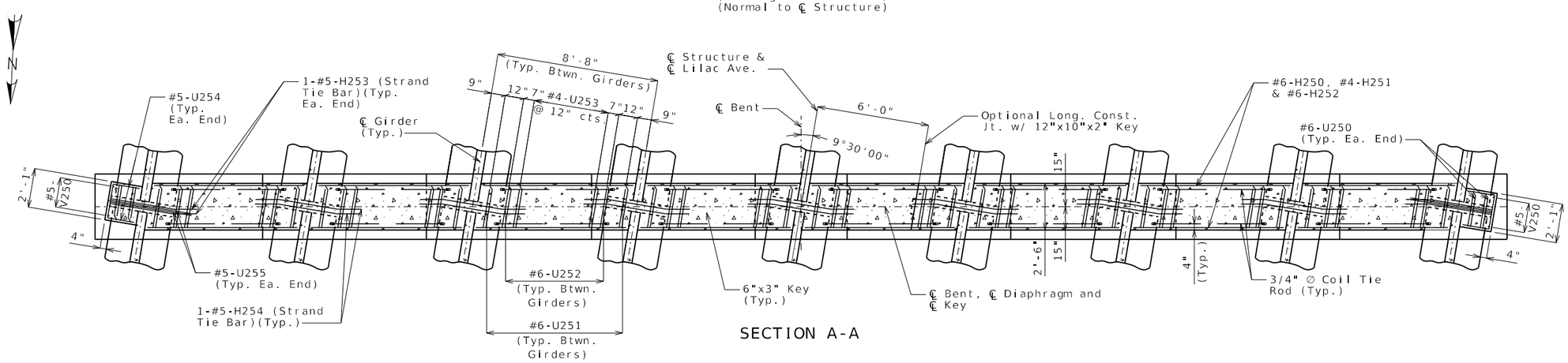

SECTION A-A

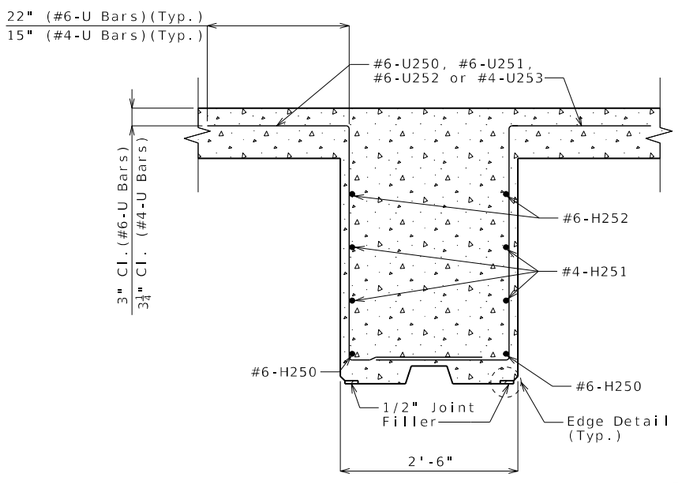

SECTION B-B

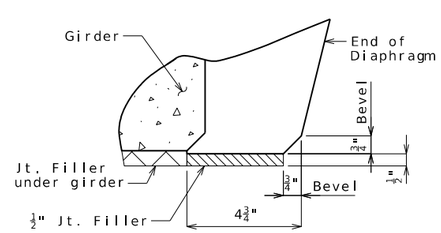

END DETAIL

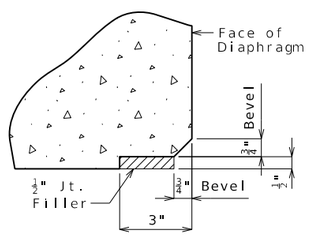

EDGE DETAIL

Notes:

Diaphragm at Intermediate Bent shall be built vertical.

The concrete diaphragm at the Intermediate Bent shall be poured a minimum of 30 minutes and a maximum of 2 hours before the slab is poured.

For location of strand tie bars and details of coil tie rods, see Sheets No. 14 and 15.

All U-bars in diaphragm are to be placed parallel to centerline of roadway.

DIAPHRAGM DETAILS AT INTERMEDIATE BENT NO. 2

Detailed August 2025
Checked August 2025

Note: This drawing is not to scale. Follow dimensions.

Sheet No. 16 of 43

STATE OF MISSOURI
RYAN DAVID SHAW
NUMBER PE-2017000368
PROFESSIONAL ENGINEER
THIS SHEET HAS BEEN SIGNED, SEALED AND DATED ELECTRONICALLY

DATE PREPARED	4/1/2026
ROUTE	I-270
STATE	MO
DISTRICT	BR
SHEET NO.	16
COUNTY	ST. LOUIS
JOB NO.	J6I3020D
CONTRACT ID.	
PROJECT NO.	
BRIDGE NO.	A9398

DESCRIPTION

DATE

MISSOURI HIGHWAYS AND TRANSPORTATION COMMISSION

MoDOT

105 WEST CAPITOL
JEFFERSON CITY, MO 65102
1-888-ASK-MODOT (1-888-275-6636)

HDR Engineering, Inc.
1001 Highlands Plaza Drive
Suite 200
St. Louis, MO 63110
314-425-8300
Certificate of Authority: 000856

c:\pwworking\central01\d4954830\B_A9398_016_J6I3020D.dgn 2:54:19 PM 4/1/2026

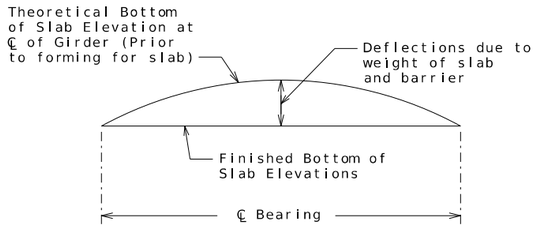

TYPICAL SLAB ELEVATIONS DIAGRAM

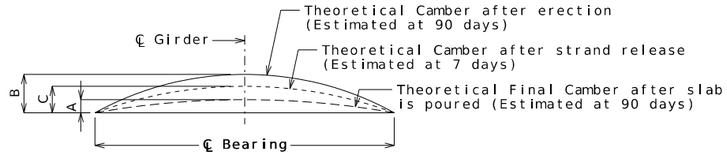

Girder	Span (1-2)			Span (2-3)		
	A	B	C	A	B	C
Ext. Girder	1½"	2¼"	1½"	1½"	2¼"	1½"
Int. Girder	1½"			1½"		

GIRDER CAMBER DIAGRAM

Conversion Factors for Girder Camber (Estimated at 90 days):
0.25 pt. = 0.7125 x 0.5 pt.

Theoretical Bottom of Slab Elevations at ℄ of Girder (Prior to forming for slab) (Estimated at 90 days)

Girder No.	Span (1-2) (68'-5" ℄ Brg. - ℄ Brg.)				
	℄ Brg.	.25	.50	.75	℄ Brg.
1	512.38	512.28	512.09	511.81	511.43
2	512.53	512.42	512.23	511.94	511.56
3	512.69	512.58	512.38	512.09	511.70
4	512.85	512.74	512.54	512.24	511.84
5	513.01	512.89	512.69	512.38	511.98
6	512.82	512.70	512.49	512.18	511.78
7	512.63	512.51	512.30	511.98	511.57
8	512.45	512.32	512.10	511.78	511.37
9	512.28	512.14	511.92	511.59	511.18
Girder No.	Span (2-3) (68'-5" ℄ Brg. - ℄ Brg.)				
	℄ Brg.	.25	.50	.75	℄ Brg.
1	511.41	511.07	510.64	510.11	509.49
2	511.53	511.19	510.76	510.22	509.59
3	511.67	511.33	510.89	510.35	509.71
4	511.82	511.47	511.02	510.47	509.84
5	511.96	511.60	511.15	510.60	509.96
6	511.75	511.39	510.94	510.38	509.73
7	511.55	511.18	510.72	510.16	509.50
8	511.34	510.97	510.50	509.94	509.28
9	511.15	510.77	510.30	509.73	509.07

Elevations are based on a constant slab thickness of 8 1/2" and include allowance for theoretical dead load deflections due to weight of slab, Corral Curbs and Type H barriers.

Girder No. 1	1 3/4"	1 5/8"	1 3/4"	1 7/8"	2 1/8"	1 3/4"	1 5/8"	1 1/2"	1 5/8"	1 3/4"
Girder No. 2	1 3/4"	1 5/8"	1 3/4"	1 7/8"	2 1/8"	1 5/8"	1 5/8"	1 1/2"	1 5/8"	1 5/8"
Girder No. 3	1 5/8"	1 5/8"	1 3/4"	1 7/8"	2"	1 5/8"	1 5/8"	1 1/2"	1 5/8"	1 5/8"
Girder No. 4	1 5/8"	1 5/8"	1 3/4"	1 7/8"	2"	1 5/8"	1 5/8"	1 1/2"	1 5/8"	1 5/8"
Girder No. 5	1 5/8"	1 3/4"	1 3/4"	1 7/8"	2"	1 5/8"	1 5/8"	1 1/2"	1 5/8"	1 5/8"
Girder No. 6	1 5/8"	1 3/4"	1 3/4"	2"	2 1/8"	1 5/8"	1 5/8"	1 1/2"	1 5/8"	1 5/8"
Girder No. 7	1 5/8"	1 3/4"	1 3/4"	2"	2 1/8"	1 5/8"	1 5/8"	1 1/2"	1 5/8"	1 5/8"
Girder No. 8	1 5/8"	1 3/4"	1 3/4"	1 7/8"	2"	1 5/8"	1 5/8"	1 1/2"	1 5/8"	1 5/8"
Girder No. 9	1 3/4"	1 3/4"	1 3/4"	2"	2 1/8"	1 3/4"	1 5/8"	1 1/2"	1 5/8"	1 3/4"

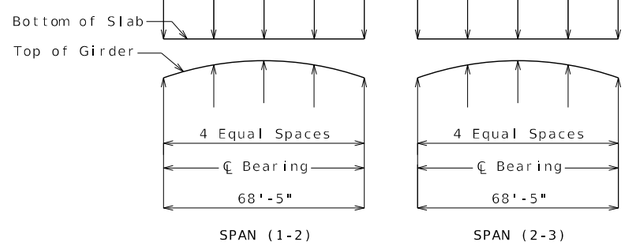

THEORETICAL SLAB HAUNCHING DIAGRAM

Notes:

If girder camber is different from that shown in the camber diagram, in order to maintain minimum slab thickness, an adjustment of the slab haunches, an increase in slab thickness or a raise in grade uniformly throughout the structure shall be necessary. The haunch shall be limited to ensure the projecting girder reinforcement is embedded into slab at least 2 inches. No payment will be made for additional labor or materials required for variation in haunching, slab thickness or grade adjustment.

Concrete in the slab haunches is included in the Estimated Quantities for Slab on Concrete NU-Girder.

CAMBER, SLAB ELEVATIONS AND HAUNCHING

Detailed August 2025
Checked August 2025

Note: This drawing is not to scale. Follow dimensions.

STATE OF MISSOURI
RYAN DAVID SHAW
NUMBER PE-2017003268
PROFESSIONAL ENGINEER
THIS SHEET HAS BEEN SIGNED, SEALED AND DATED ELECTRONICALLY

DATE PREPARED 4/1/2026
ROUTE I-270 | STATE MO
DISTRICT BR | SHEET NO. 17
COUNTY ST. LOUIS
JOB NO. J6I3020D
CONTRACT ID.
PROJECT NO.
BRIDGE NO. A9398

DESCRIPTION | DATE

MISSOURI HIGHWAYS AND TRANSPORTATION COMMISSION
105 WEST CAPITOL
JEFFERSON CITY, MO 65102
1-888-ASK-MODOT (1-888-275-6636)

HDR Engineering, Inc.
1001 Highlands Plaza Drive
Suite 200
St. Louis, MO 63110
314-425-8300
Certificate of Authority: 000856

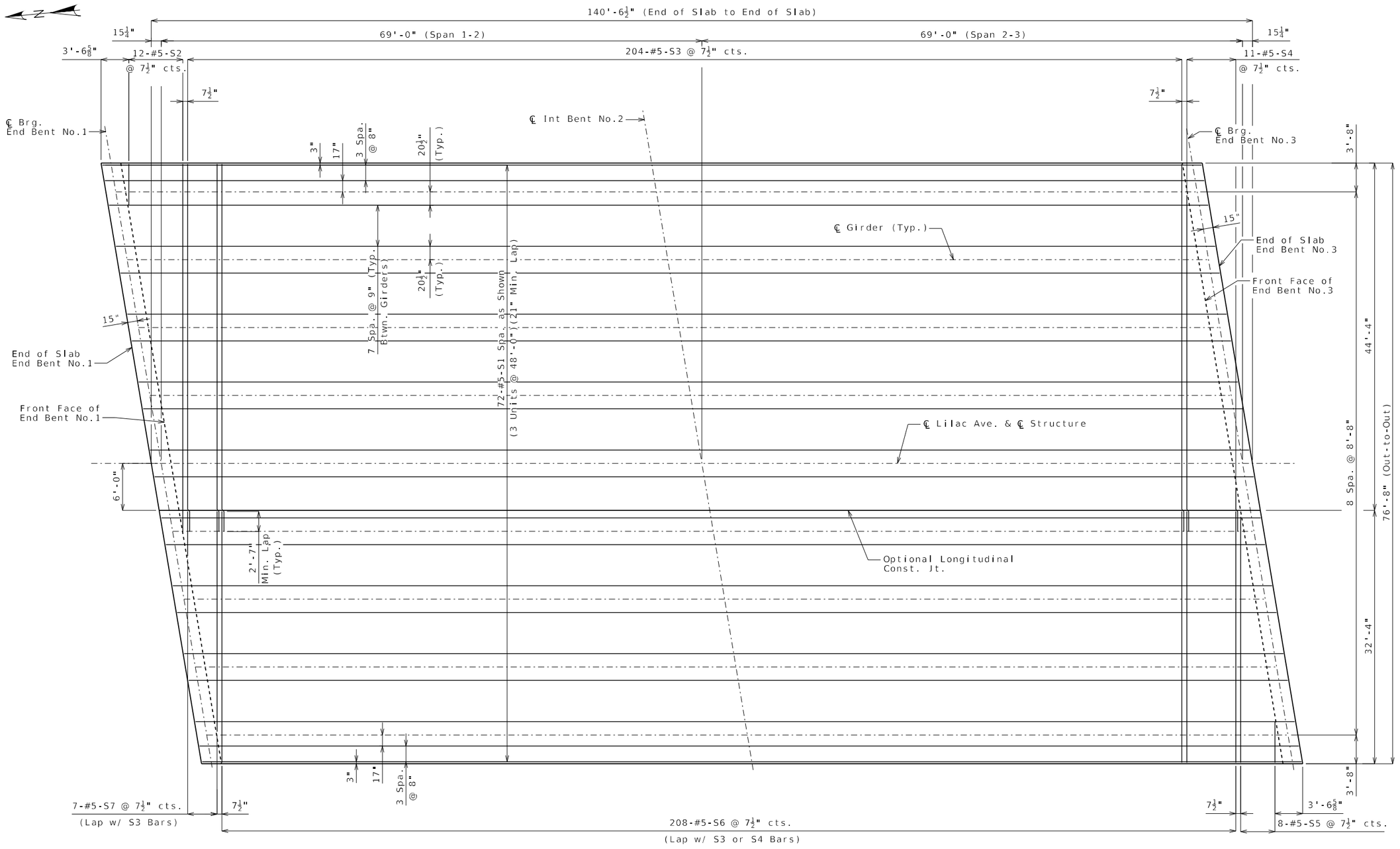

Notes:

Longitudinal slab dimensions are measured horizontally.

For Typical Slab Section and Slab Pouring Sequence, see Sheet No. 20.

For details and reinforcement of Type H Barrier not shown, see Sheet No. 21.

For details and reinforcement of Corral Curb not shown, see Sheet No. 22.

For Theoretical Slab Haunching Diagram and Theoretical Bottom of Slab Elevations, see Sheet No. 17.

PLAN OF SLAB REINFORCEMENT-BOTTOM

Detailed August 2025
Checked August 2025

Note: This drawing is not to scale. Follow dimensions.

STATE OF MISSOURI
RYAN DAVID SHAW
NUMBER PE-2017000368
PROFESSIONAL ENGINEER
THIS SHEET HAS BEEN SIGNED, SEALED AND DATED ELECTRONICALLY

DATE PREPARED	4/1/2026
ROUTE	I-270
STATE	MO
DISTRICT	BR
SHEET NO.	18
COUNTY	ST. LOUIS
JOB NO.	J6I3020D
CONTRACT ID.	
PROJECT NO.	
BRIDGE NO.	A9398

DESCRIPTION

DATE

MISSOURI HIGHWAYS AND TRANSPORTATION COMMISSION

MoDOT

105 WEST CAPITOL
JEFFERSON CITY, MO 65102
1-888-ASK-MODOT (1-888-275-6636)

HDR Engineering, Inc.
1001 Highlands Plaza Drive
Suite 200
St. Louis, MO 63110
314-425-8300
Certificate of Authority: 000856

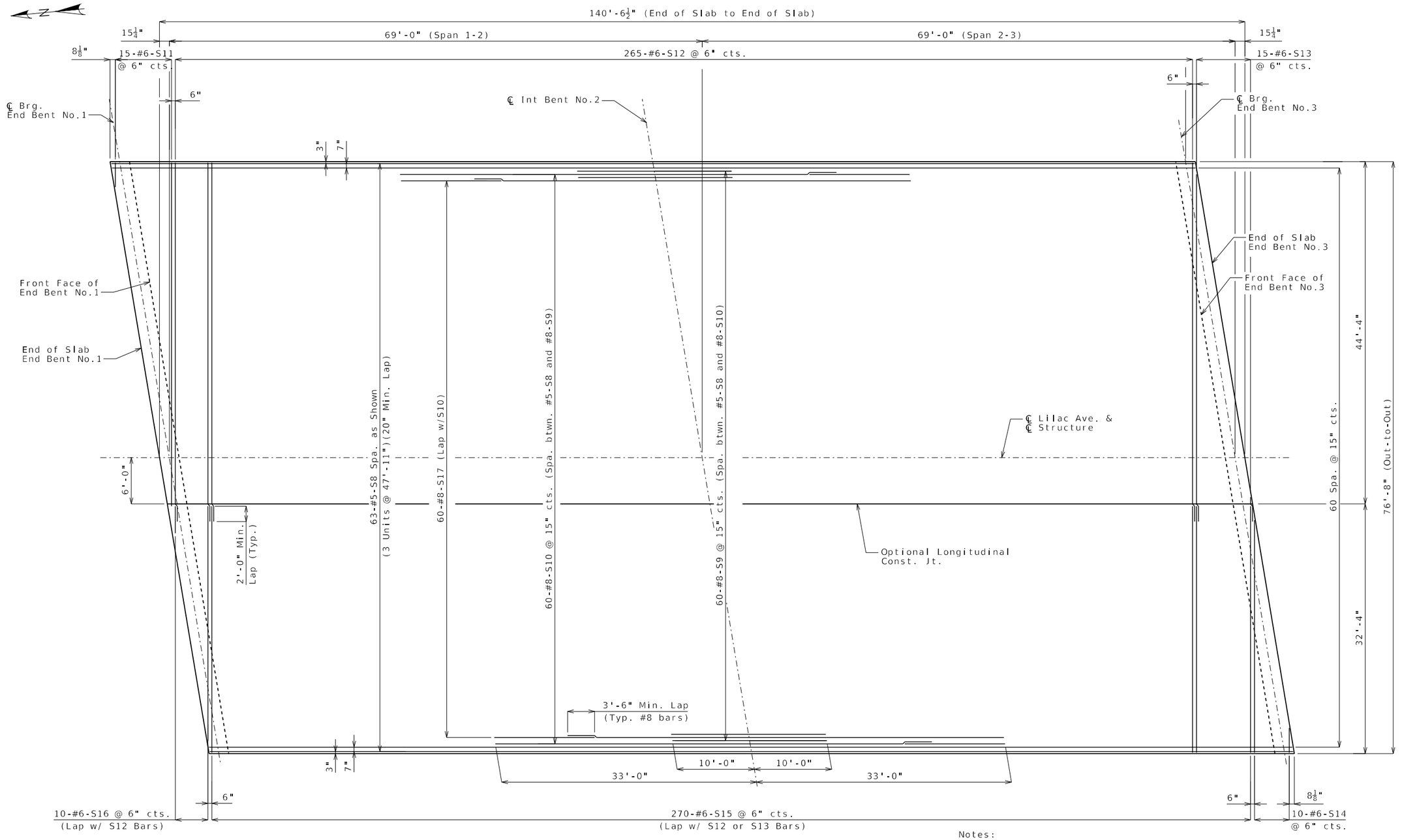

Notes:

Reinforcing steel shall be shifted in the field to clear resin anchors for corral curb.

Longitudinal slab dimensions are measured horizontally.

For Typical Slab Section and Slab Pouring Sequence, see Sheet No. 20.

For details and reinforcement of Type H Barrier not shown, see Sheet No. 21.

For details and reinforcement of Corral Curb not shown, see Sheet No. 22.

For Theoretical Slab Haunching Diagram and Theoretical Bottom of Slab Elevations, see Sheet No. 17.

PLAN OF SLAB REINFORCEMENT-TOP

Detailed August 2025
Checked August 2025

Note: This drawing is not to scale. Follow dimensions.

STATE OF MISSOURI
RYAN DAVID SHAW
NUMBER PE-2017003388
PROFESSIONAL ENGINEER
THIS SHEET HAS BEEN SIGNED, SEALED AND DATED ELECTRONICALLY

DATE PREPARED: 4/1/2026
ROUTE: I-270 | STATE: MO
DISTRICT: BR | SHEET NO.: 19
COUNTY: ST. LOUIS
JOB NO.: J6I3020D
CONTRACT ID.:
PROJECT NO.:
BRIDGE NO.: A9398

DATE	DESCRIPTION

MISSOURI HIGHWAYS AND TRANSPORTATION COMMISSION
105 WEST CAPITOL
JEFFERSON CITY, MO 65102
1-888-ASK-MODOT (1-888-275-6636)

HDR Engineering, Inc.
1001 Highlands Plaza Drive
Suite 200
St. Louis, MO 63110
314-425-8300
Certificate of Authority: 000856

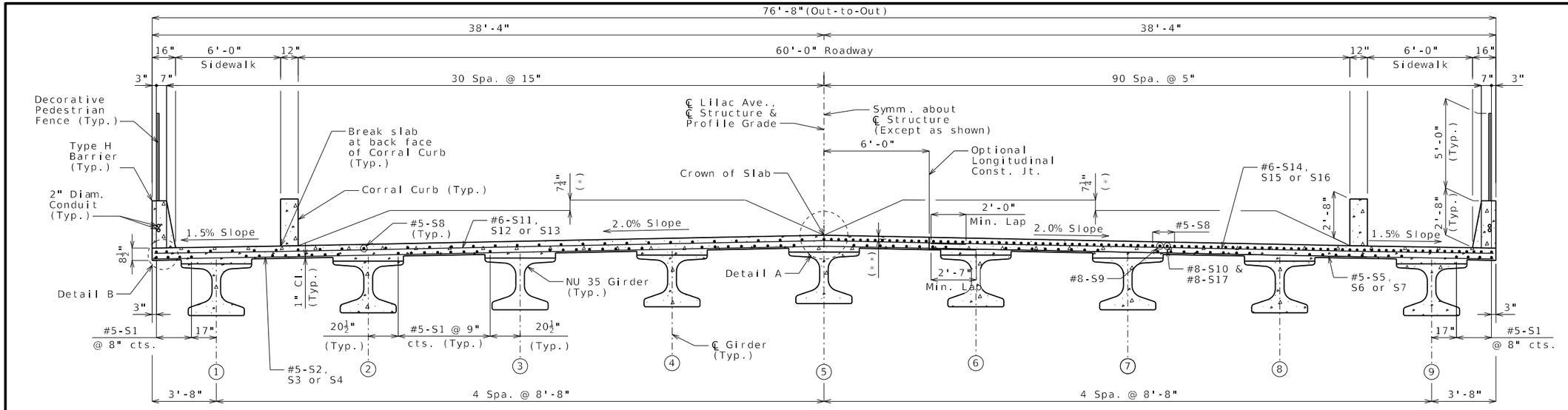

HALF SECTION NEAR MIDSPAN

HALF SECTION NEAR INTERMEDIATE BENT

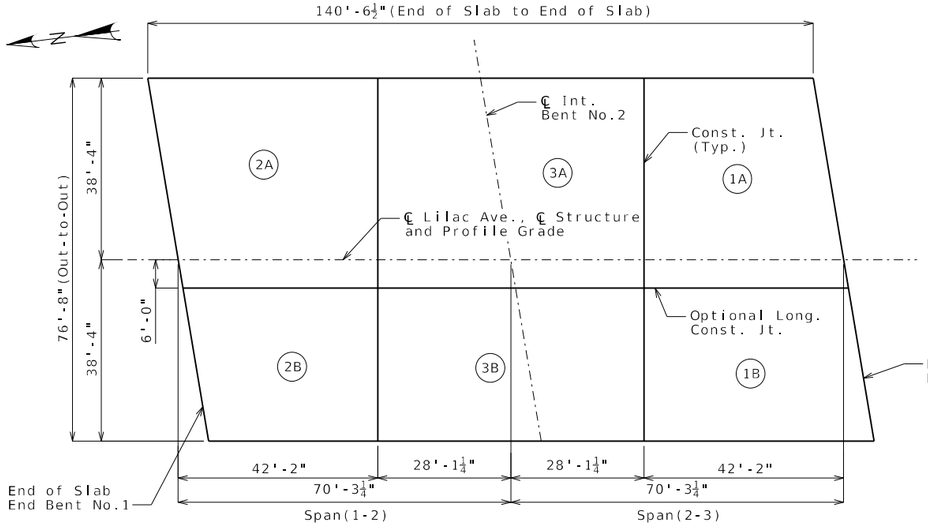

	Sequence of Pours			Min. Rate of Pour Cu. Yds./Hr.
	Direction			With Retarder
Basic Sequence	1	2	3	25
	Either Direction			
Alternate pours to the basic skip sequence are subject to the approval of the engineer in accordance with Sec 703.				
Alternate A Pours	1	3 + 2		37
	End to 3	1 to End		
Alternate B Pours	1 + 3 + 2			49
	End to End			

The contractor shall furnish an approved retarder to retard the set of the concrete to 2.5 hours and shall pour and satisfactorily finish the slab pours at the rate given.

The concrete diaphragm at the intermediate bent and integral end bents shall be poured a minimum of 30 minutes and a maximum of 2 hours before the slab is poured.

The longitudinal construction joint may be omitted with the approval of the engineer. When the longitudinal construction joint is omitted, the minimum rate of pour for alternate pouring sequences shall be increased by a factor of 1.73.

SLAB POURING SEQUENCE

SECTION THRU SLAB

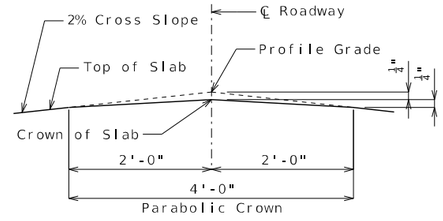

DETAIL A

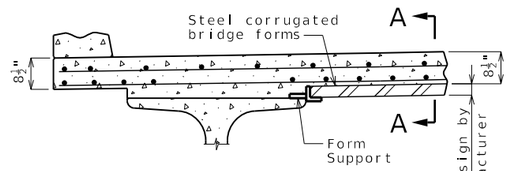

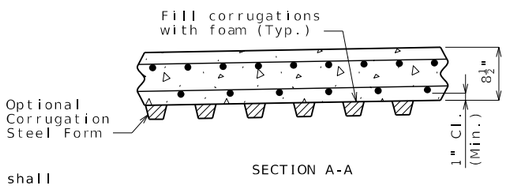

SECTION A-A

OPTIONAL STAY-IN-PLACE FORM DETAILS

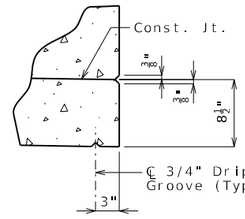

DETAIL B

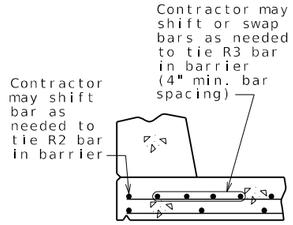

OPTIONAL SHIFTING TOP BARS AT BARRIER

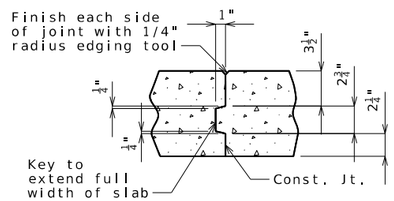

SLAB CONSTRUCTION JOINT

(*) To Profile Grade Elevation

(**) 2 3/4" cl. to #8-S9 and S10 Bars. 3 1/8" cl. to #5-S8 Bars.

Notes:

For Plan of Slab Reinforcement, see Sheets No. 18 & 19.

For details and reinforcement of Type H Barrier, see Sheets No. 21 & 23.

For details and reinforcement of Corral Curb, see Sheet No 22.

For Theoretical Slab Haunching Diagram, Girder Camber Diagram and Theoretical Bottom of Slab Elevations, see Sheet No. 17.

For conduit and junction box details, see Sheet No. 25.

TYPICAL SLAB SECTION AND DETAILS

Detailed August 2025
Checked August 2025

Note: This drawing is not to scale. Follow dimensions.

Sheet No. 20 of 43

RYAN DAVID SHAW NUMBER PE-2011000388 STATE OF MISSOURI PROFESSIONAL ENGINEER

THIS SHEET HAS BEEN SIGNED, SEALED AND DATED ELECTRONICALLY

DATE PREPARED 4/6/2026

ROUTE	STATE
I-270	MO
DISTRICT	SHEET NO.
BR	20

COUNTY ST. LOUIS

JOB NO. J6I3020D

CONTRACT ID.

PROJECT NO.

BRIDGE NO. A9398

DESCRIPTION | DATE

MISSOURI HIGHWAYS AND TRANSPORTATION COMMISSION

105 WEST CAPITOL
JEFFERSON CITY, MO 65102
1-888-ASK-MODOT (1-888-275-6636)

HDR Engineering, Inc.
1001 Highlands Plaza Drive
Suite 200
St. Louis, MO 63110
314-425-8300
Certificate of Authority: 000856

c:\pwworking\central01\d4954830\B_A9398_020_J6I3020D.dgn 2:01:14 PM 4/6/2026

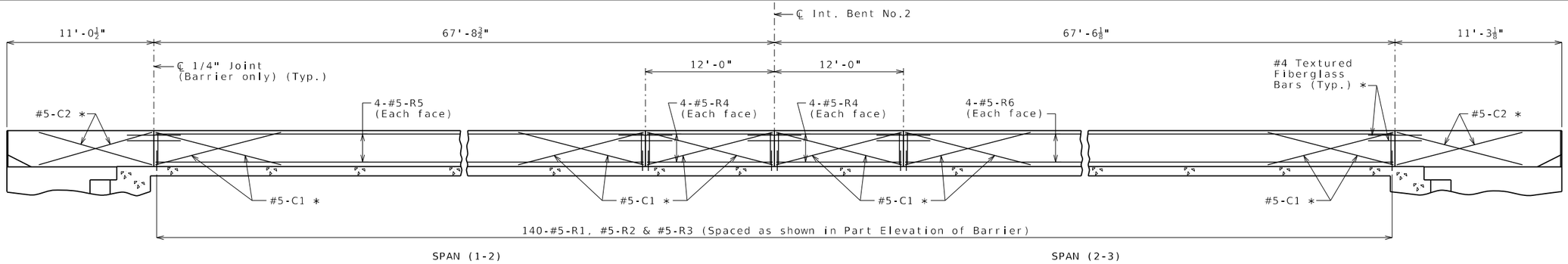

ELEVATION OF BARRIER

(Left barrier shown, right barrier similar.)
Longitudinal dimensions are horizontal.

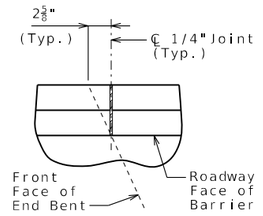

End Bent No.1

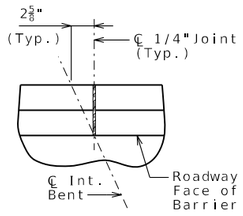

Int. Bent No.2

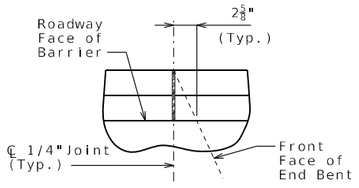

End Bent No.3

PART PLAN SHOWING JOINT LOCATION

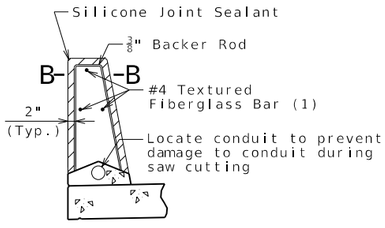

SECTION THRU SAW CUT JOINT

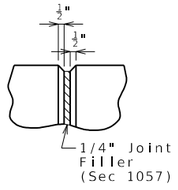

PART ELEVATION AT FORMED JOINT

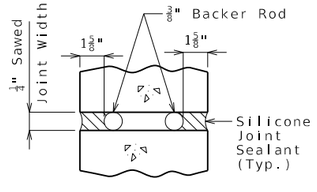

SECTION B-B

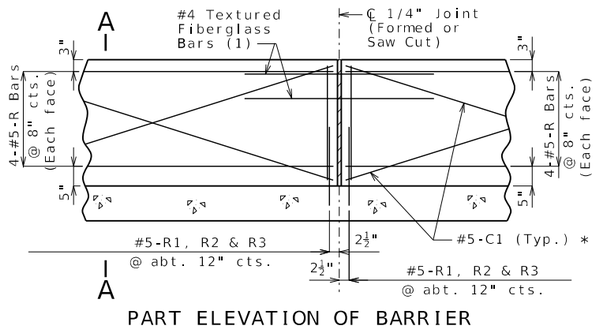

PART ELEVATION OF BARRIER

(1) Four feet long, centered on joint, slip-formed option only

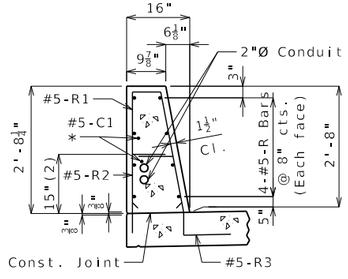

SECTION A-A

(Left barrier shown, right barrier similar.)

Use a minimum lap of 2'-6" for #5 horizontal barrier bars.

The cross-sectional area above the slab is 2.89 square feet.

(2) To top of bar

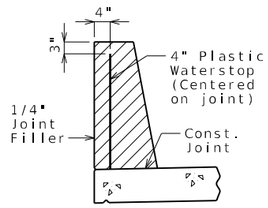

WATERSTOP DETAIL

Plastic waterstop shall be placed in all formed joints, except structures with superelevation, use on lower joints only.

Cost of plastic waterstop, complete in place, will be considered completely covered by the contract unit price for Type H Barrier.

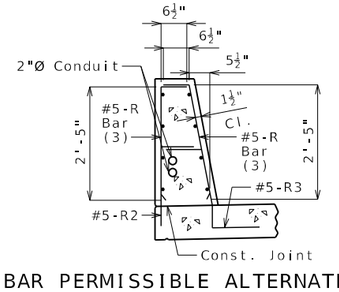

R-BAR PERMISSIBLE ALTERNATE SHAPE

(Left barrier shown, right barrier similar.)

(3) The R1 bar may be separated into two bars as shown, at the contractor's option, only when slip forming is not used. (All dimensions are out to out.)

General Notes:

* Slip-formed option only.

Conventional forming or slip forming may be used. Saw cut joints may be used with conventional forming.

Top of barrier shall be built parallel to grade and barrier joints (except at end bents) normal to grade.

All exposed edges of barrier shall have either a 1/2-inch radius or a 3/8-inch bevel, unless otherwise noted.

Payment for all concrete and reinforcement, complete in place, will be considered completely covered by the contract unit price for Type H Barrier per linear foot.

Concrete in barrier shall be Class B-1.

Measurement of barrier is to the nearest linear foot for each structure, measured along the outside top of slab from end of wing to end of wing.

Joint sealant and backer rods shall be in accordance with Sec 717 for silicone joint sealant for saw cut and formed joints.

For slip-formed option, both sides of barrier shall have a vertically broomed finish and the top shall have a transversely broomed finish.

Plastic waterstop shall not be used with saw cut joints.

For details of decorative pedestrian fence, see Sheet No. 24.

Reinforcing steel shall be shifted in the field to clear resin anchors for sign support bracket.

For conduit and junction box details, see Sheet No. 25.

For Sign Support details, see Sheets No. 27 thru 29.

TYPE H BARRIER

Detailed August 2025
Checked August 2025

Note: This drawing is not to scale. Follow dimensions.

RYAN DAVID SHAW NUMBER PE-2017000388 PROFESSIONAL ENGINEER
THIS SHEET HAS BEEN SIGNED, SEALED AND DATED ELECTRONICALLY

DATE PREPARED 4/1/2026
ROUTE I-270 | STATE MO
DISTRICT BR | SHEET NO. 21
COUNTY ST. LOUIS
JOB NO. J6I3020D
CONTRACT ID.
PROJECT NO.
BRIDGE NO. A9398

DESCRIPTION | DATE

MISSOURI HIGHWAYS AND TRANSPORTATION COMMISSION
105 WEST CAPITOL
JEFFERSON CITY, MO 65102
1-888-ASK-MODOT (1-888-275-6636)
HDR Engineering, Inc.
1001 Highlands Plaza Drive
Suite 200
St. Louis, MO 63110
314-425-8300
Certificate of Authority: 000856

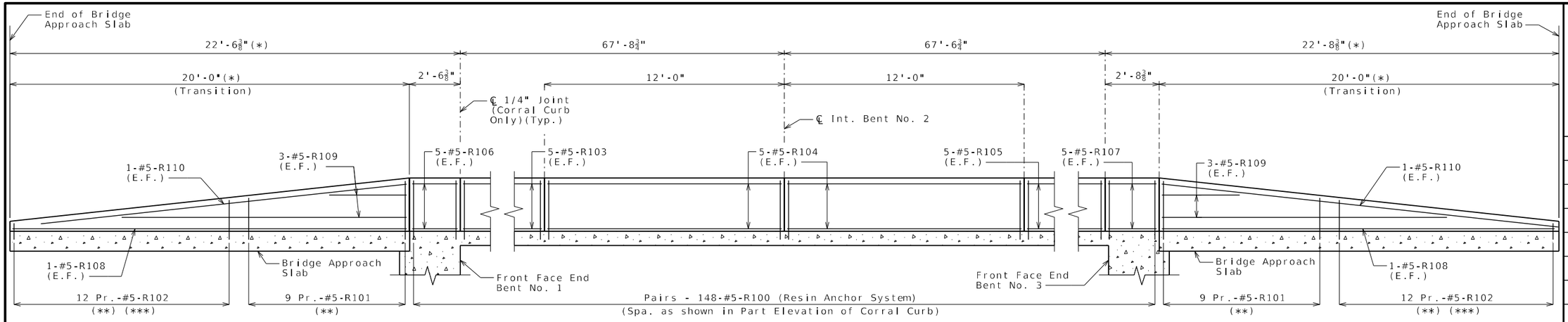

ELEVATION OF CORRAL CURB

(Left corral curb shown, right corral curb similar.)
Longitudinal dimensions are horizontal.

(*) Dimensioned along roadway face of Corral Curb.

(**) Resin Anchor System (Spa. as shown in Part Elevation of Corral Curb).

(***) Trim in field to maintain minimum clearance.

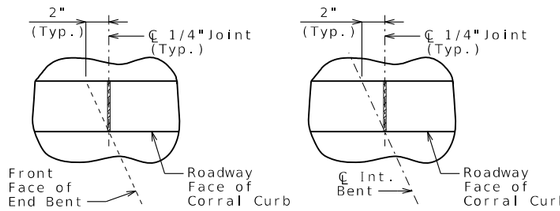

PART PLAN SHOWING JOINT LOCATION

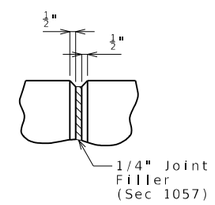

PART ELEVATION AT FORMED JOINT

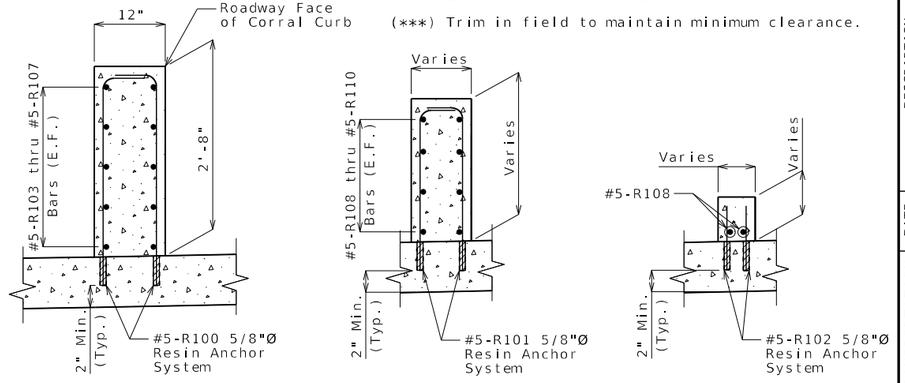

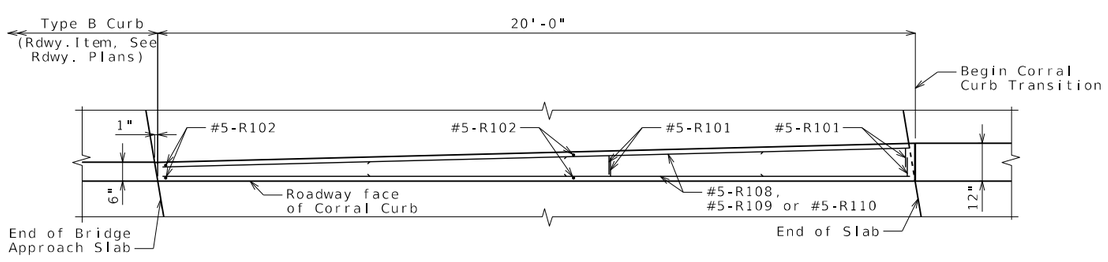

PART PLAN OF CORRAL CURB SHOWING TRANSITION

(Left corral curb shown at End Bent No. 1, transition at End Bent No. 3 similar)

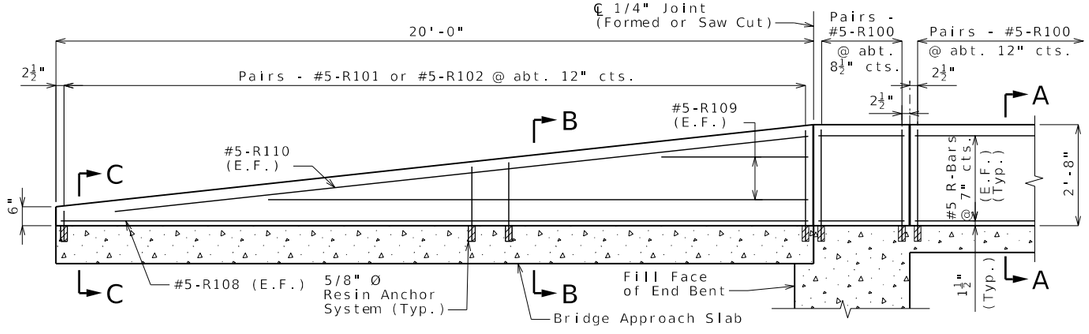

PART ELEVATION OF CORRAL CURB

CORRAL CURB DETAILS

Notes:

Conventional forming shall be used.

Top of Corral Curb shall be built parallel to grade and Corral Curb joints (except at end of approach slab) normal to grade.

All exposed edges of Corral Curb shall have either a 1/2-inch radius or a 3/8-inch bevel, unless noted otherwise.

Payment for all concrete and reinforcement for Corral Curb, complete in place, will be considered completely covered by the contract unit price for Corral Curb per linear foot.

Concrete in Corral Curb shall be Class B-1.

Measurement of Corral Curb is to the nearest linear foot measured along the roadway face of Corral Curb top of slab from end of approach slab to end of approach slab.

The contractor shall use one of the qualified resin anchor systems in accordance with Sec 1039.

The minimum embedment depth in concrete with f'c = 4,000 psi for the resin anchor systems shall be that required to meet the minimum ultimate pullout strength in accordance with Sec 1039 but shall not be less than 5".

Cost of furnishing and installing the resin anchor systems, complete in place, will be considered completely covered by the contract unit price for Corral Curb.

Galvanized #5-R100, #5-R101 and #5-R102 Grade 60 reinforcing bars shall be substituted for the 5/8"Ø threaded rods.

Detailed August 2025
Checked August 2025

Note: This drawing is not to scale. Follow dimensions.

STATE OF MISSOURI
RYAN DAVID SHAW
NUMBER PE-2011003368
PROFESSIONAL ENGINEER
THIS SHEET HAS BEEN SIGNED, SEALED AND DATED ELECTRONICALLY

DATE PREPARED 4/6/2026
ROUTE I-270 | STATE MO
DISTRICT BR | SHEET NO. 22
COUNTY ST. LOUIS
JOB NO. J6I3020D
CONTRACT ID.
PROJECT NO.
BRIDGE NO. A9398

DESCRIPTION | DATE

MISSOURI HIGHWAYS AND TRANSPORTATION COMMISSION
105 WEST CAPITOL
JEFFERSON CITY, MO 65102
1-888-ASK-MODOT (1-888-275-6636)

HDR Engineering, Inc.
1001 Highlands Plaza Drive
Suite 200
St. Louis, MO 63110
314-425-8300
Certificate of Authority: 000856

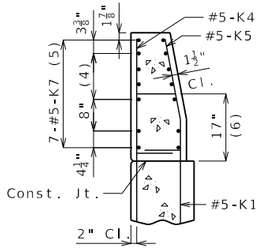

SECTION A-A

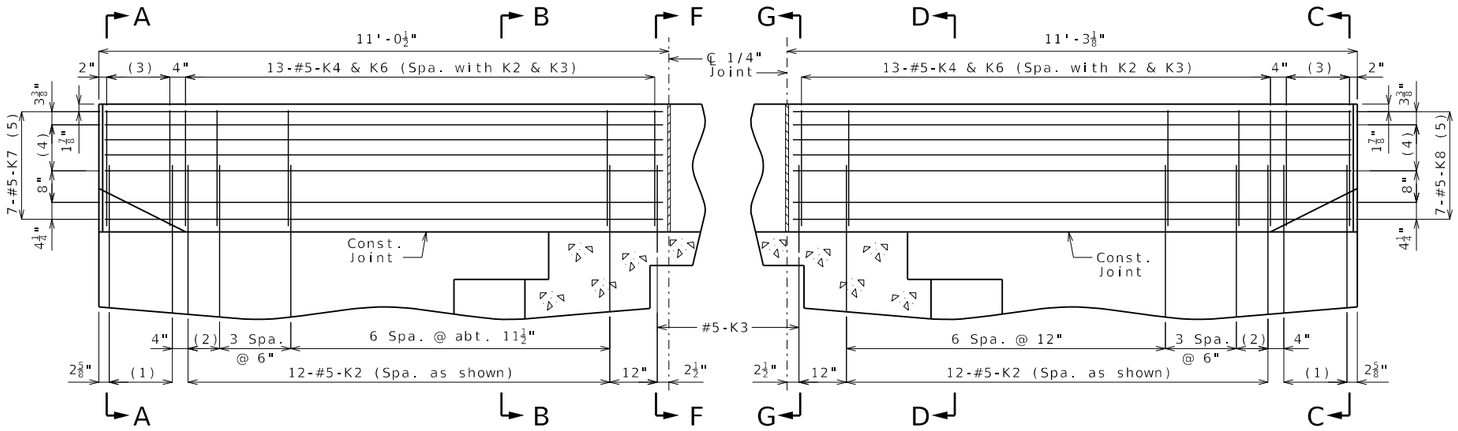

PART ELEVATION

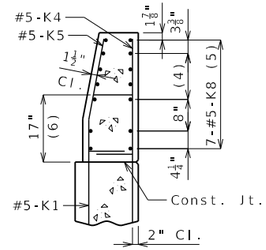

SECTION C-C

(1) 5-#5-K1 @ 4" cts.

(2) 2 Spaces @ 4"

(3) 5-#5-K4 and 5-#5-K5, spaced with K1

(4) 3 Spaces @ 3 13/16"

(5) Spaced as shown, each face

(6) To top of bar

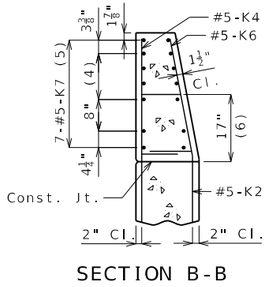

SECTION B-B

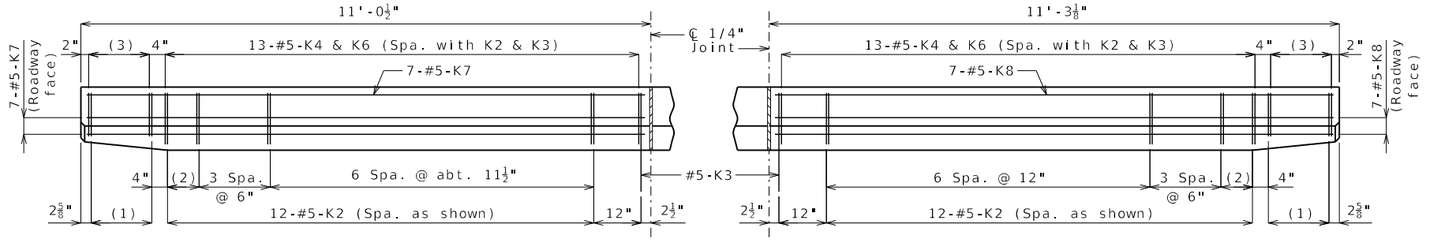

PART PLAN

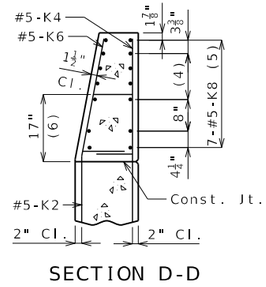

SECTION D-D

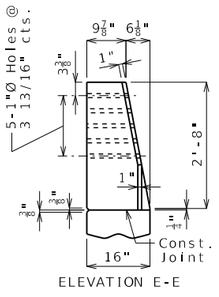

ELEVATION E-E

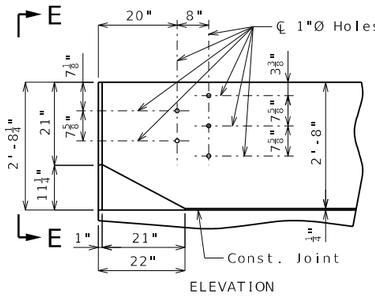

ELEVATION

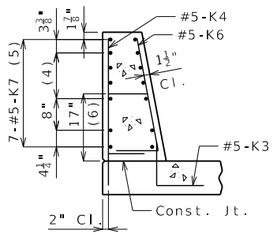

SECTION F-F

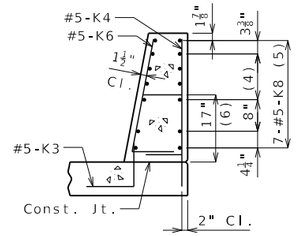

SECTION G-G

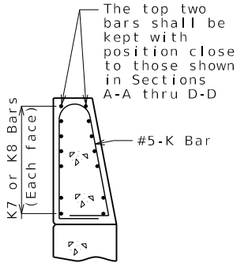

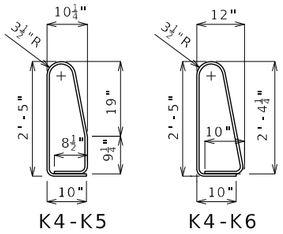

PERMISSIBLE ALTERNATE SHAPES

(Other K bars not shown for clarity)

The K4-K5 and K4-K6 bar combination may be furnished as one bar as shown, at the contractor's option.

Notes:

All dimensions are out to out.

For conduit and junction box details, see Sheet No. 25.

* Transition to zero at Type A curb for gutter lines to match.

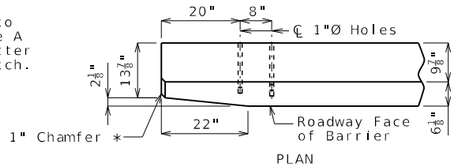

PLAN

DETAILS OF GUARD RAIL ATTACHMENT

General Notes:

Reinforcing Steel:

Minimum clearance to reinforcing steel shall be 1 1/2" except as shown for bars embedded into end bent.

TYPE H BARRIER AT END BENTS

(Left barrier shown, right barrier similar)

Detailed August 2025
Checked August 2025

Note: This drawing is not to scale. Follow dimensions.

STATE OF MISSOURI
RYAN DAVID SHAW
NUMBER PE-2017003388
PROFESSIONAL ENGINEER
THIS SHEET HAS BEEN SIGNED, SEALED AND DATED ELECTRONICALLY

DATE PREPARED 4/1/2026

ROUTE	STATE
I-270	MO
DISTRICT	SHEET NO.
BR	23

COUNTY: ST. LOUIS
JOB NO.: J6I3020D
CONTRACT ID.:
PROJECT NO.:
BRIDGE NO.: A9398

DESCRIPTION | DATE

MISSOURI HIGHWAYS AND TRANSPORTATION COMMISSION
105 WEST CAPITOL
JEFFERSON CITY, MO 65102
1-888-ASK-MODOT (1-888-275-6636)

HDR Engineering, Inc.
1001 Highlands Plaza Drive
Suite 200
St. Louis, MO 63110
314-425-8300
Certificate of Authority: 000856

Notes:

These details are a general representation of a Decorative Pedestrian Fence. The actual fence components and component positions may be different than what is shown.

Fence shall have a gloss black finish (Federal Standard #17038). See special provisions.

Base plate shall be ASTM A709, Grade 50.

All base plates, U-bolts, hex nuts and washers shall be galvanized in accordance with ASTM A123 and Sec 1081.

Measurement of decorative pedestrian fence will be made horizontally and to the nearest linear foot along centerline fence.

Payment for furnishing and erecting the fence complete in place will be considered completely covered by the contract unit price for (60 in.) Decorative Pedestrian Fence (Structures).

All fence posts shall be vertical.

Grout shall be placed under the post base plates in accordance with Sec 1066.

Decorative pedestrian fencing shall be in accordance with 2020-AASHTO LRFD Bridge Design Specifications, 9th Ed.

Shop drawings and structural calculations will not be required for the decorative pedestrian fences on the Bridge Pre-qualified Products List.

All materials used in fabrication and construction of the decorative pedestrian fencing shall be in accordance with the manufacturer's specifications, except as modified in the contract documents.

Decorative pedestrian fencing system shall be supplied by only one manufacturer. Decorative pedestrian fencing system shall include all components except the U-bolts, hardware, and #4 bars welded to the U-bolts. The assembly of the pickets to the rails and the rails to the posts shall be the same as the style mentioned for the manufacturer.

See Bridge Pre-qualified Products List (BPPL) for a list of approved manufacturers.

Substitution for the U-bolt cages will not be permitted.

U-bolts shall be ASTM F1554 Grade 36.

For details of Type H Barrier, see Sheets No. 21 and 23.

For conduit and junction box details, see Sheet No. 25.

Decorative fence posts shall miss barrier joints.

The contractor shall field verify the location of the installed post anchoring systems and ornamental luminaires prior to fabrication of the decorative fence.

Cost of furnishing and installing U-bolts, reinforcing anchorage bars and hardware, complete in place, will be considered completely covered by the contract unit price for (60 in.) Decorative Pedestrian Fence (Structures).

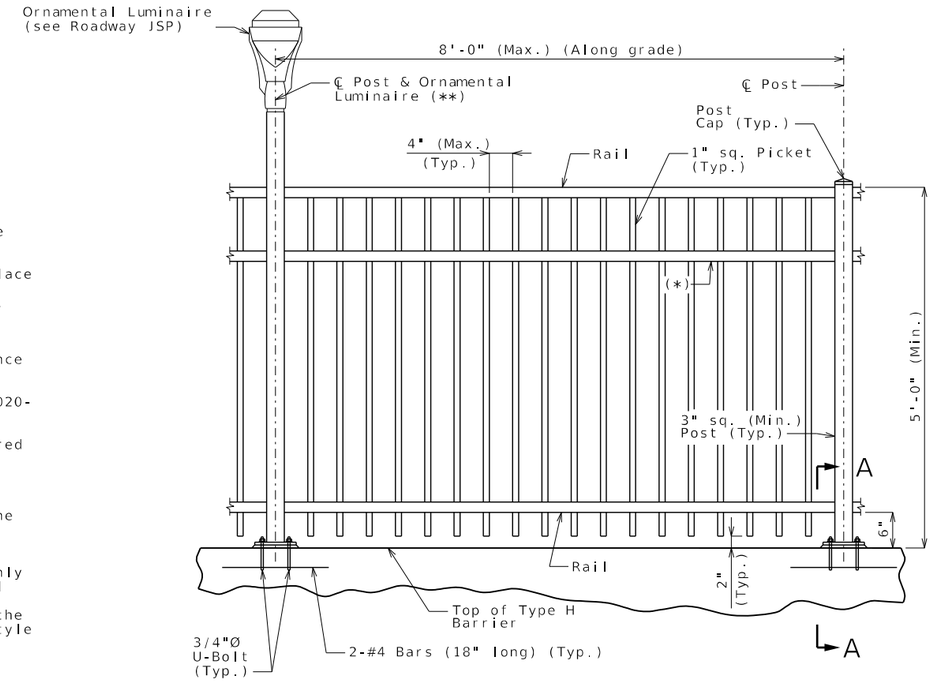

TYPICAL PART ELEVATION

(Left barrier shown, right barrier similar.)

(*) Optional rail. Need is based on design computations performed by the manufacturer and approved by MoDOT, or may be added for aesthetics.

(**) Ornamental luminaires for the decorative fence shall be located as shown on Plan.

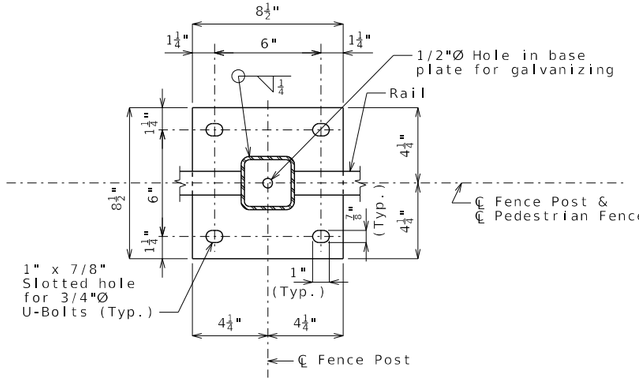

PART PLAN SHOWING BASE PLATE

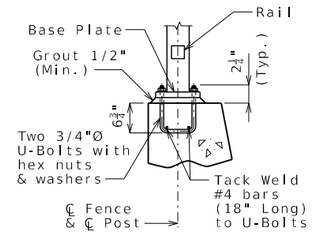

SECTION A-A

1/2-inch diameter hole in base plate not shown for clarity.

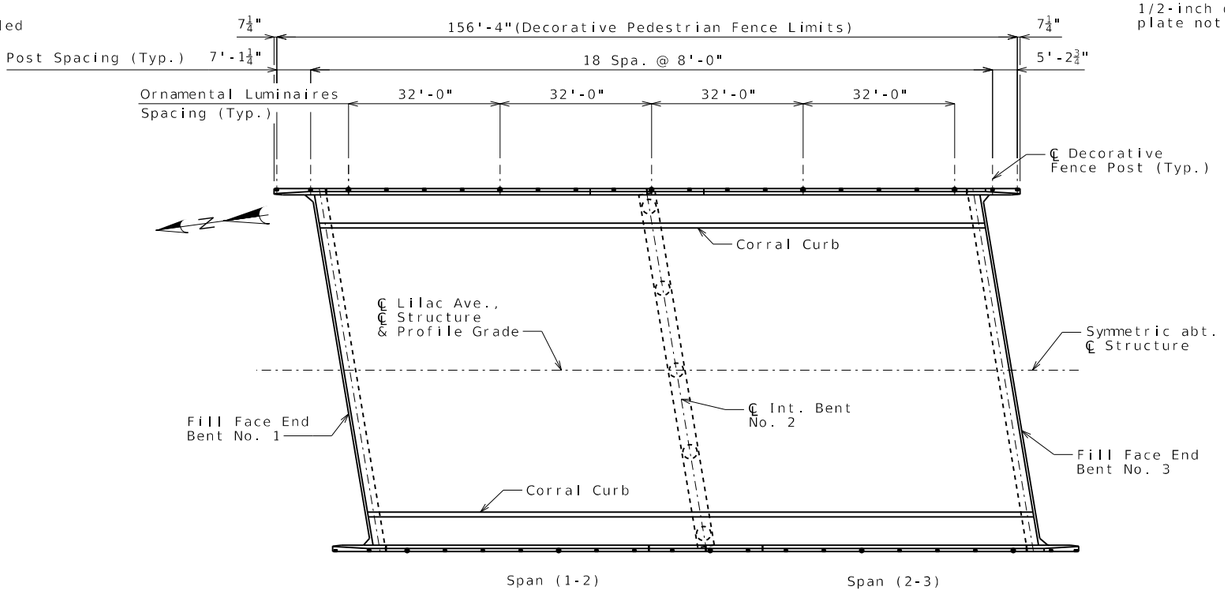

PLAN

(Left barrier dimensioned, right barrier similar.)

DECORATIVE PEDESTRIAN FENCE WITH U-BOLTS

Detailed August 2025
Checked August 2025

Note: This drawing is not to scale. Follow dimensions.

STATE OF MISSOURI
RYAN DAVID SHAW
NUMBER PE-2017003388
PROFESSIONAL ENGINEER
THIS SHEET HAS BEEN SIGNED, SEALED AND DATED ELECTRONICALLY

DATE PREPARED 4/1/2026

ROUTE	STATE
I-270	MO
DISTRICT	SHEET NO.
BR	24

COUNTY: ST. LOUIS

JOB NO.: J6I3020D

CONTRACT ID.:

PROJECT NO.:

BRIDGE NO.: A9398

DESCRIPTION | DATE

MISSOURI HIGHWAYS AND TRANSPORTATION COMMISSION
105 WEST CAPITOL
JEFFERSON CITY, MO 65102
1-888-ASK-MODOT (1-888-275-6636)

HDR Engineering, Inc.
1001 Highlands Plaza Drive
Suite 200
St. Louis, MO 63110
314-425-8300
Certificate of Authority: 000856

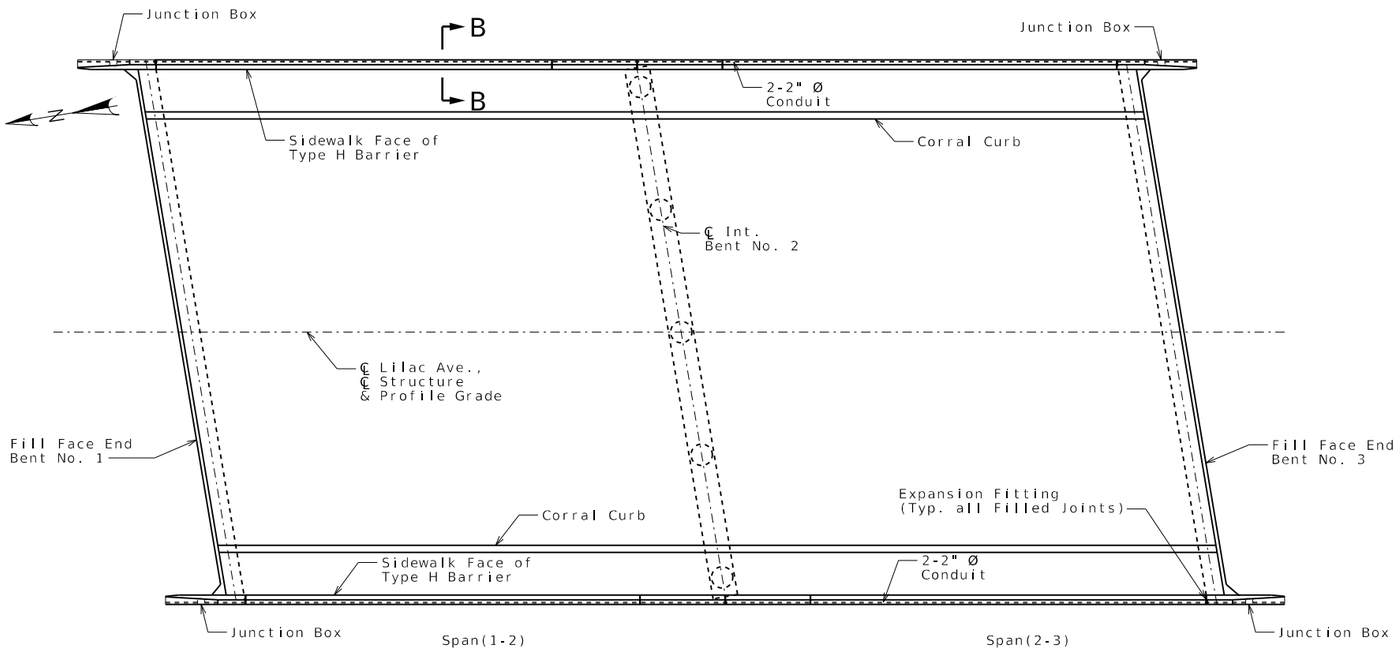

PLAN OF CONDUIT SYSTEM

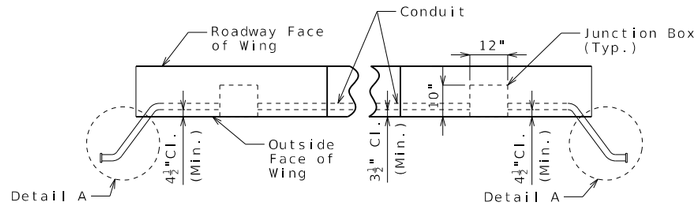

PART PLAN OF BARRIER SHOWING DELINEATED CONDUIT SYSTEM PLACEMENT

(Single conduit shown, multiple conduits similar.)
(Expansion fitting and deflection coupling not shown for clarity.)

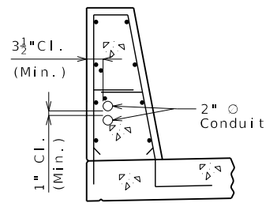

SECTION B-B

(Left barrier shown, right barrier similar.)

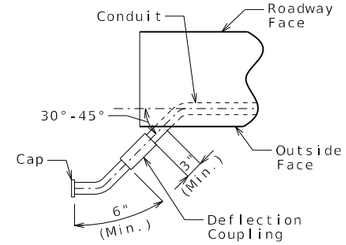

DETAIL A

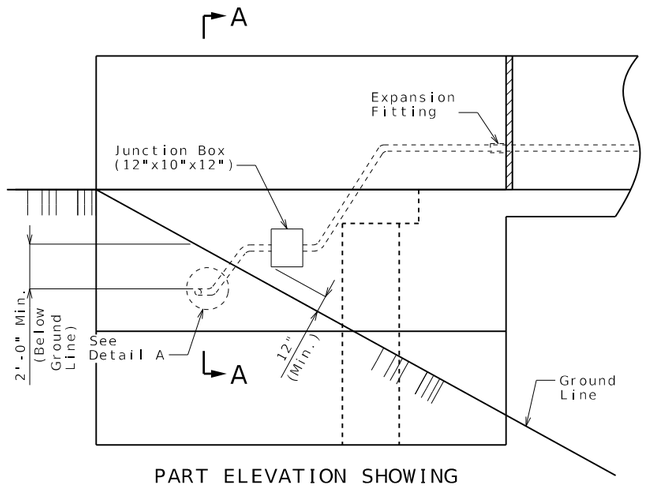

PART ELEVATION SHOWING JUNCTION BOX IN WING

(Single conduit shown, multiple conduits similar.)

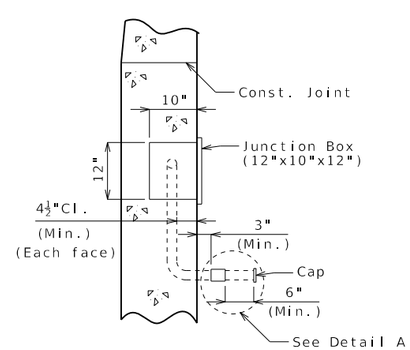

PART SECTION A-A

Notes:

All conduits shall be rigid, nonmetallic, Schedule 40, heavy wall polyvinyl chloride (PVC) with 3 1/2" minimum cover in barrier and 4 1/2" minimum cover in abutment wing. Each section of conduit shall bear the Underwriters Laboratories (UL) label.

Shift reinforcing steel in field where necessary to clear conduit and junction boxes.

Expansion fittings shall be placed as shown and set in accordance with the manufacturer's requirements and based on the air temperature at the time of setting given an estimated total expansion movement of 1 inch at closed joints using a maximum temperature range of 120°F and a maximum temperature of 110°F.

Minimum clearance between conduits placed in barrier shall be 1".

All junction boxes shall be PVC molded in accordance with Sec 1062 and designed for flush mounting. The conduit terminations shall be permanent or separable. The terminations and covers shall be of watertight construction and shall meet requirements for NEMA 4 or NEMA 4X enclosures.

Drainage shall be provided at low points or other critical locations of all conduits and all junction boxes in accordance with Sec 707. All conduits shall be sloped to drain where possible.

Junction box size shown on plan may require special order. Smaller junction box may be substituted if junction box meets conduit installation, clearance and project requirements.

MoDOT Construction Personnel: Indicate in field and on bridge plans for future work the exact location of buried conduit at ends of bridge that are capped and not immediately used.

Payment for furnishing and installing Conduit System, complete in place, will be considered completely covered by the contract lump sum price for Conduit System on Structure.

CONDUIT SYSTEM DETAILS

Detailed August 2025
Checked August 2025

Note: This drawing is not to scale. Follow dimensions.

STATE OF MISSOURI
RYAN DAVID SHAW
NUMBER PE-2017000368
PROFESSIONAL ENGINEER
THIS SHEET HAS BEEN SIGNED, SEALED AND DATED ELECTRONICALLY

DATE PREPARED 4/1/2026	
ROUTE I-270	STATE MO
DISTRICT BR	SHEET NO. 25
COUNTY ST. LOUIS	
JOB NO. J6I3020D	
CONTRACT ID.	
PROJECT NO.	
BRIDGE NO. A9398	

DESCRIPTION

DATE

MISSOURI HIGHWAYS AND TRANSPORTATION COMMISSION

MoDOT

105 WEST CAPITOL
JEFFERSON CITY, MO 65102
1-888-ASK-MODOT (1-888-275-6636)

HDR Engineering, Inc.
1001 Highlands Plaza Drive
Suite 200
St. Louis, MO 63110
314-425-8300
Certificate of Authority: 000856

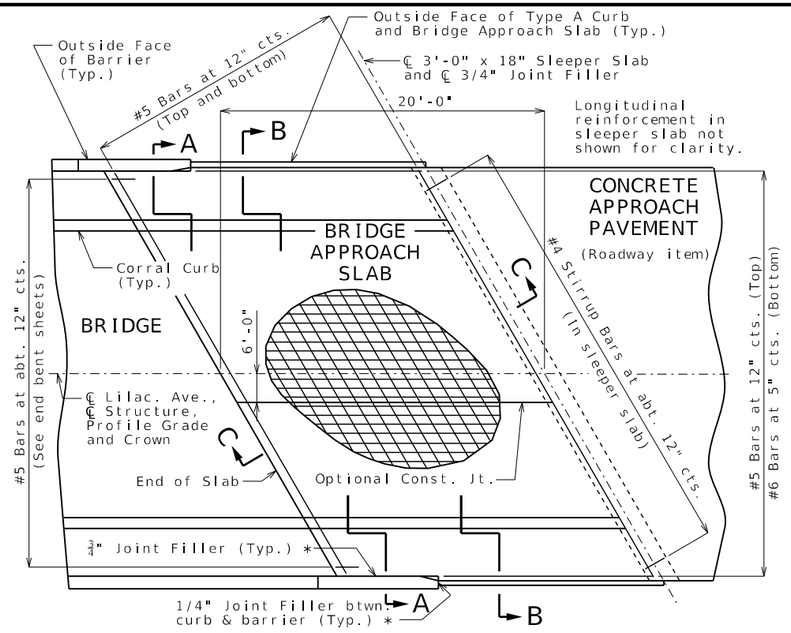

PART PLAN SHOWING REINFORCEMENT

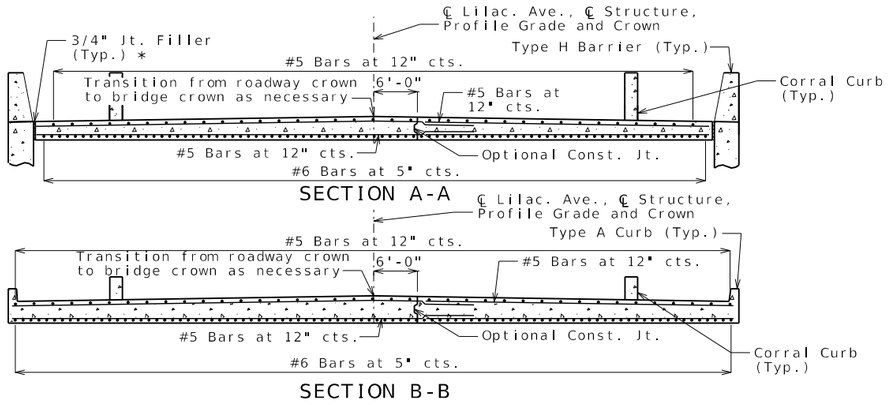

With the approval of the engineer, the contractor may crown the bottom of the approach slab to match the crown of the roadway surface.

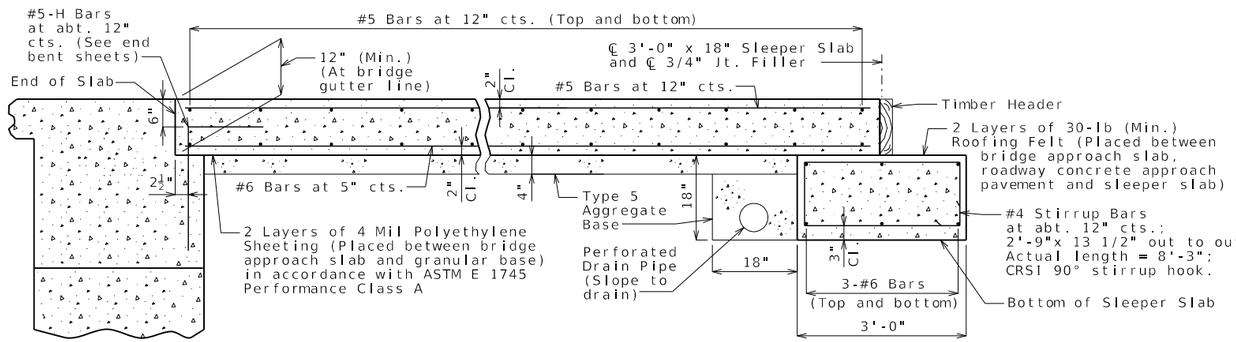

SECTION C-C

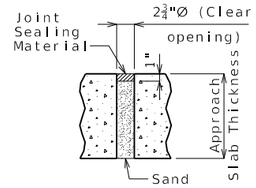

UNDERSEAL ACCESS HOLE DETAIL

(If required)

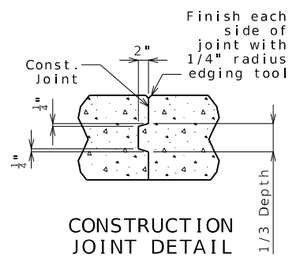

CONSTRUCTION JOINT DETAIL

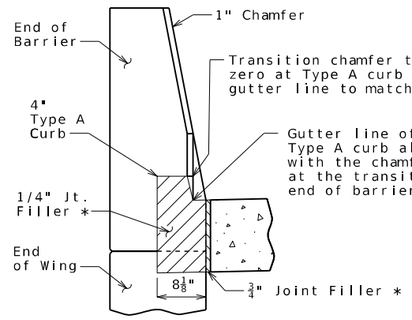

SECTION BETWEEN CURB AND BARRIER

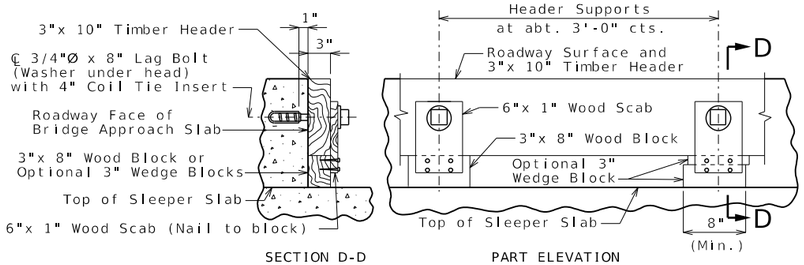

DETAILS OF TIMBER HEADER

Remove timber header when concrete pavement is placed.

General Notes:

All concrete for the bridge approach slab and sleeper slab shall be in accordance with Sec 503 (f'c = 4,000 psi).

The reinforcing steel in the bridge approach slab and the sleeper slab shall be galvanized Grade 60 with fy = 60,000 psi.

Drain pipe may be either 6" diameter corrugated metallic-coated pipe underdrain, 4" diameter corrugated polyvinyl chloride (PVC) drain pipe, or 4" diameter corrugated polyethylene (PE) drain pipe.

Minimum clearance to reinforcing steel shall be 1 1/2", unless otherwise shown.

The reinforcing steel in the bridge approach slab and the sleeper slab shall be continuous. The transverse reinforcing steel may be made continuous by providing a minimum lap splice of 24 inches for #5 bars and 40 inches for #6 bars, or by mechanical bar splice.

Mechanical bar splices shall be in accordance with Sec 706 or 710.

All joint filler shall be in accordance with Sec 1057 for preformed fiber expansion joint filler except as noted.

The contractor shall pour and satisfactorily finish the bridge slab before placing the bridge approach slab.

Longitudinal construction joints in approach slab and sleeper slab shall be aligned with longitudinal construction joints in bridge slab.

For concrete approach pavement details, see roadway plans.

See Missouri Standard Plan 609.00 for details of Type A curb.

Payment for furnishing all materials, labor and excavation necessary to construct the approach slab, including the timber header, sleeper slab, underdrain, Type 5 aggregate base, joint filler and all other appurtenances and incidental work as shown on this sheet, complete in place, will be considered completely covered by the contract unit price for Bridge Approach Slab (Major) per square yard.

* Seal joint between vertical face of approach slab and wing with sealant in accordance with Sec 717 for silicone joint sealant for saw cut and formed joints.

For details and reinforcement of Corral Curb, see Sheet No. 22.

BRIDGE APPROACH SLAB (MAJOR)

Detailed August 2025
Checked August 2025

Note: This drawing is not to scale. Follow dimensions.

STATE OF MISSOURI
RYAN DAVID SHAW
NUMBER PE-2011000388
PROFESSIONAL ENGINEER
THIS SHEET HAS BEEN SIGNED, SEALED AND DATED ELECTRONICALLY

DATE PREPARED 4/1/2026

ROUTE	STATE
I-270	MO
DISTRICT	SHEET NO.
BR	26

COUNTY: ST. LOUIS
JOB NO.: J6I3020D
CONTRACT ID.:
PROJECT NO.:
BRIDGE NO.: A9398

DESCRIPTION | DATE

MISSOURI HIGHWAYS AND TRANSPORTATION COMMISSION
105 WEST CAPITOL
JEFFERSON CITY, MO 65102
(573-275-6636)
1-888-ASK-MODOT (1-888-275-6636)

HDR Engineering, Inc.
1001 Highlands Plaza Drive
Suite 200
St. Louis, MO 63110
314-425-8300
Certificate of Authority: 000856

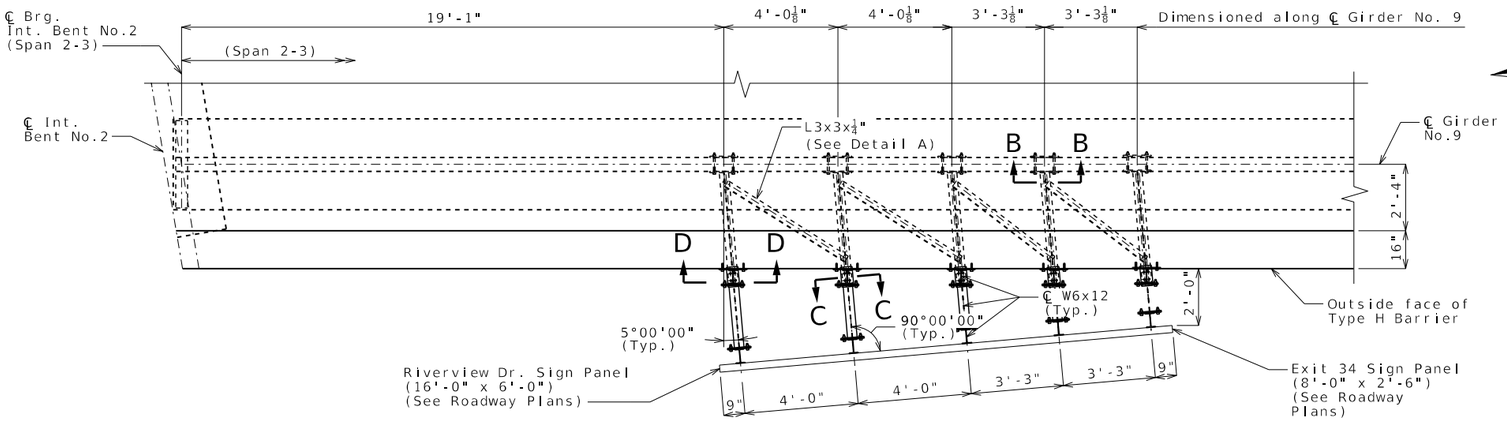

PART PLAN SHOWING EASTBOUND I-270 SIGN BRACKET

(Decorative pedestrian fence not shown for clarity.)

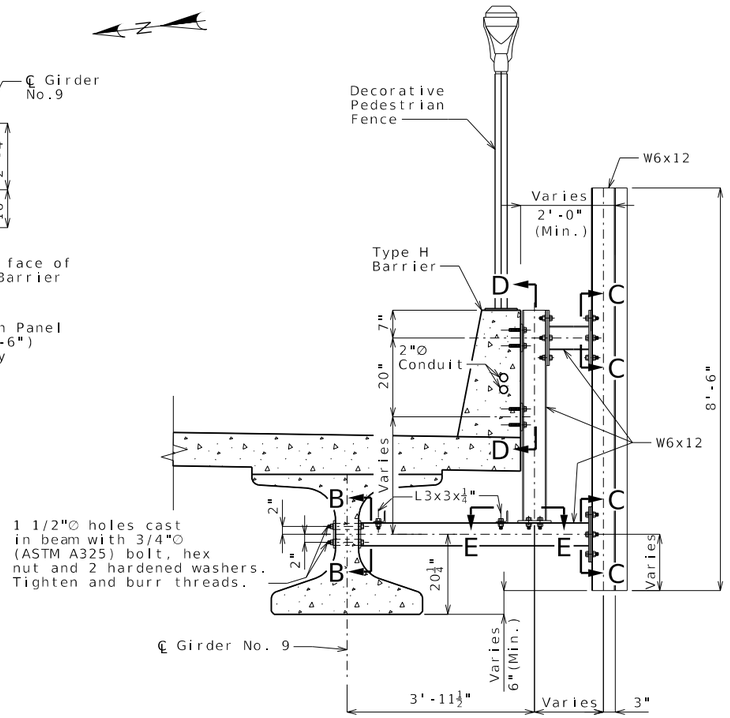

SECTION A-A

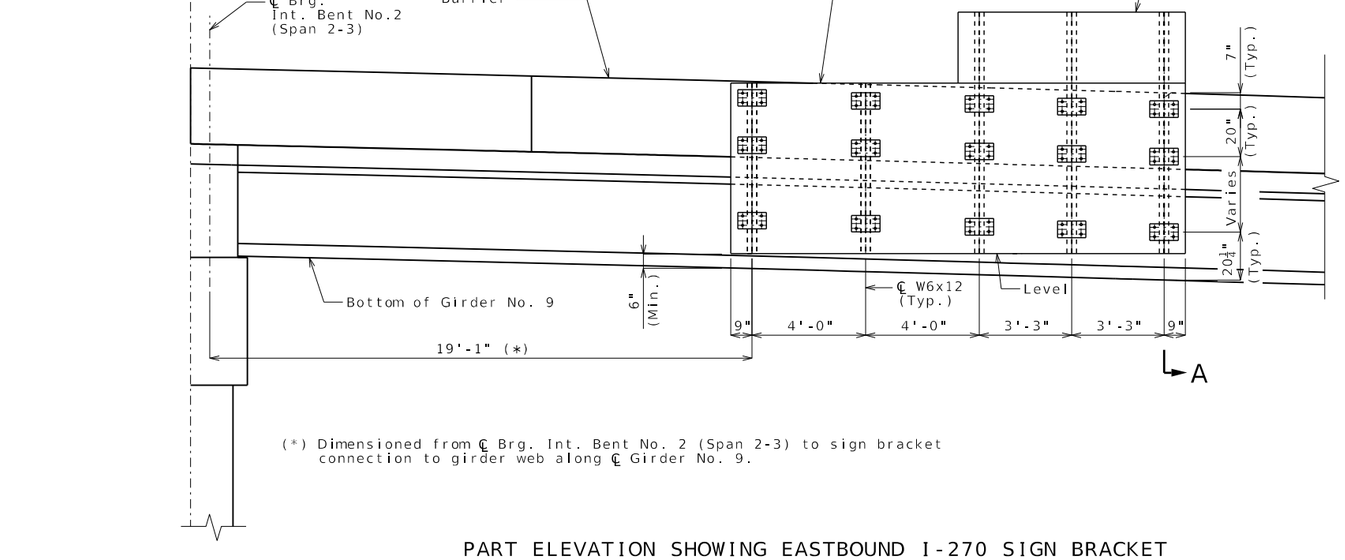

(*) Dimensioned from ℄ Brg. Int. Bent No. 2 (Span 2-3) to sign bracket connection to girder web along ℄ Girder No. 9.

PART ELEVATION SHOWING EASTBOUND I-270 SIGN BRACKET

(Looking east at west side of bridge perpendicular to sign.)
(Decorative pedestrian fence not shown for clarity.)

Notes:

Center and level sign on supports.

All longitudinal dimensions are horizontal.

All bolts, nuts and washers shall be galvanized.

All structural steel shall be ASTM A709, Grade 50, galvanized.

Bolted connections shall be ASTM F3125 Grade A325 Type 1 bolts. Bolt threads shall be burred after sign as been erected.

Concrete anchors shall be the non-drilling expansion type and shall have a certified concrete pullout strength (ultimate load) of 12,100 pounds (min.) in 4,000 psi concrete. The hole shall be pre-drilled with a conventional carbide masonry bit.

Shift sign support bracket to the minimum extent necessary to allow for installation of anchors into structure to clear barrier reinforcing steel and conduits.

The cost of furnishing and erecting the sign supports, including the concrete anchors, complete in place, will be considered completely covered by the contract lump sum price for Fabricated Sign Support Brackets.

Sign substrate shall be 12" extruded panels.

For prestressed girder details, see Sheets No. 14 and 15.

Sign panels are a Roadway Item, see Roadway Plans.

For Westbound I-270 Sign Bracket Details, see Sheet No. 28.

For additional sign bracket sections and details, see Sheet No. 29.

Complete shop drawings of the sign brackets shall be required in accordance with Sec 1080.

SIGN BRACKET DETAILS

Detailed August 2025
Checked August 2025

Note: This drawing is not to scale. Follow dimensions.

STATE OF MISSOURI
RYAN DAVID SHAW
NUMBER PE-2017000388
PROFESSIONAL ENGINEER
THIS SHEET HAS BEEN SIGNED, SEALED AND DATED ELECTRONICALLY

DATE PREPARED 4/1/2026
ROUTE I-270 | STATE MO
DISTRICT BR | SHEET NO. 27
COUNTY ST. LOUIS
JOB NO. J6I3020D
CONTRACT ID.
PROJECT NO.
BRIDGE NO. A9398

DESCRIPTION | DATE

MISSOURI HIGHWAYS AND TRANSPORTATION COMMISSION
105 WEST CAPITOL
JEFFERSON CITY, MO 65102
1-888-ASK-MODOT (1-888-275-6636)

HDR Engineering, Inc.
1001 Highlands Plaza Drive
Suite 200
St. Louis, MO 63110
314-425-8300
Certificate of Authority: 000856

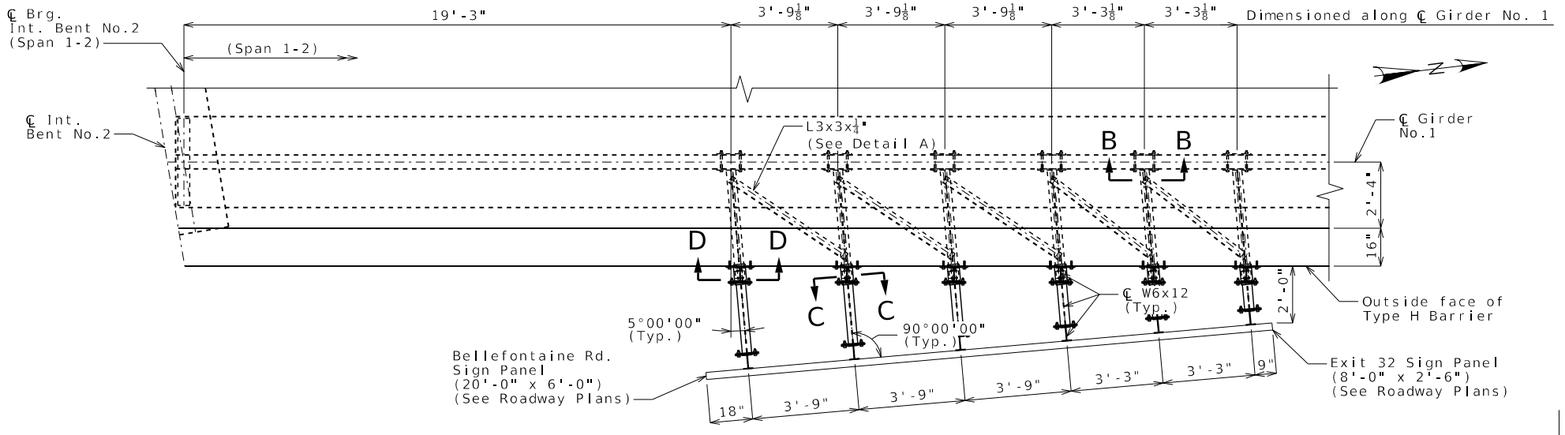

PART PLAN SHOWING WESTBOUND I-270 SIGN BRACKET

(Decorative pedestrian fence not shown for clarity.)

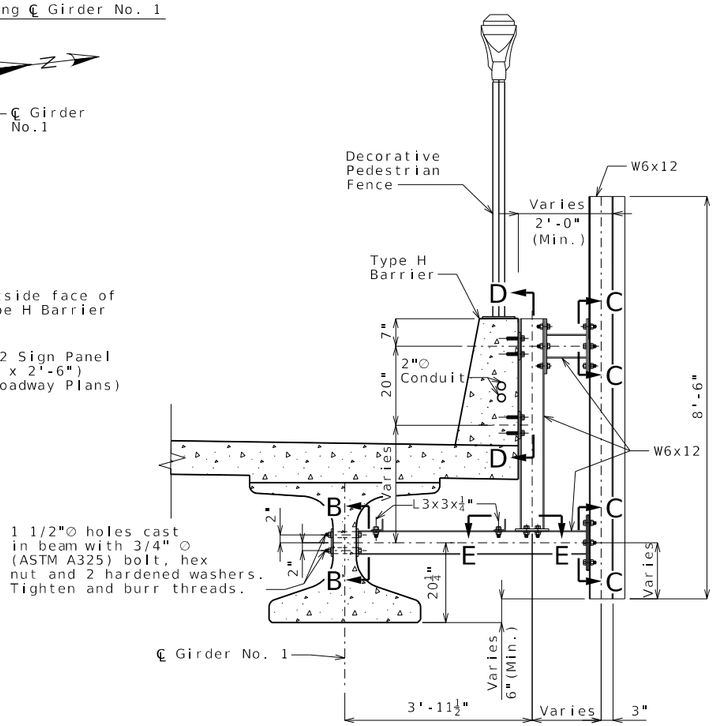

SECTION A-A

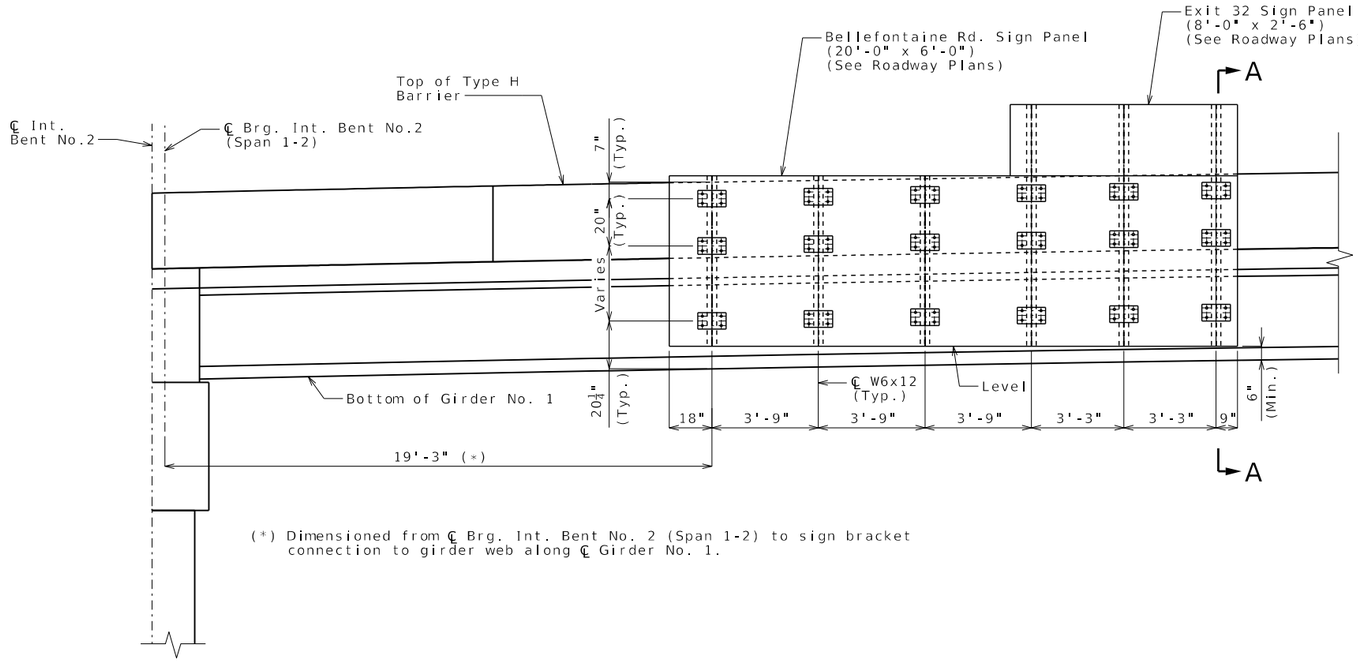

(*) Dimensioned from ℄ Brg. Int. Bent No. 2 (Span 1-2) to sign bracket connection to girder web along ℄ Girder No. 1.

PART ELEVATION SHOWING WESTBOUND I-270 SIGN BRACKET

(Looking west at east side of bridge perpendicular to sign.)

(Decorative pedestrian fence not shown for clarity.)

Notes:

Center and level sign on supports.

All longitudinal dimensions are horizontal.

All bolts, nuts and washers shall be galvanized.

All structural steel shall be ASTM A709, Grade 50, galvanized.

Bolted connections shall be ASTM F3125 Grade A325 Type 1 bolts. Bolt threads shall be burred after sign as been erected.

Concrete anchors shall be the non-drilling expansion type and shall have a certified concrete pullout strength (ultimate load) of 12,100 pounds (min.) in 4,000 psi concrete. The hole shall be pre-drilled with a conventional carbide masonry bit.

Shift sign support bracket to the minimum extent necessary to allow for installation of anchors into structure to clear barrier reinforcing steel and conduits.

The cost of furnishing and erecting the sign supports, including the concrete anchors, complete in place, will be considered completely covered by the contract lump sum price for Fabricated Sign Support Brackets.

Sign substrate shall be 12" extruded panels.

For prestressed girder details, see Sheets No. 14 and 15.

Sign panels are a Roadway Item, see Roadway Plans.

For Eastbound I-270 Sign Bracket Details, see Sheet No. 27.

For additional sign bracket sections and details, see Sheet No. 29.

Complete shop drawings of the sign brackets shall be required in accordance with Sec 1080.

SIGN BRACKET DETAILS

Detailed August 2025
Checked August 2025

Note: This drawing is not to scale. Follow dimensions.

STATE OF MISSOURI
RYAN DAVID SHAW
NUMBER PE-2017000388
PROFESSIONAL ENGINEER
THIS SHEET HAS BEEN SIGNED, SEALED AND DATED ELECTRONICALLY

DATE PREPARED 4/1/2026
ROUTE I-270 | STATE MO
DISTRICT BR | SHEET NO. 28
COUNTY ST. LOUIS
JOB NO. J6I3020D
CONTRACT ID.
PROJECT NO.
BRIDGE NO. A9398

DESCRIPTION | DATE

MISSOURI HIGHWAYS AND TRANSPORTATION COMMISSION
105 WEST CAPITOL
JEFFERSON CITY, MO 65102
1-888-ASK-MODOT (1-888-275-6636)

HDR Engineering, Inc.
1001 Highlands Plaza Drive
Suite 200
St. Louis, MO 63110
314-425-8300
Certificate of Authority: 000856

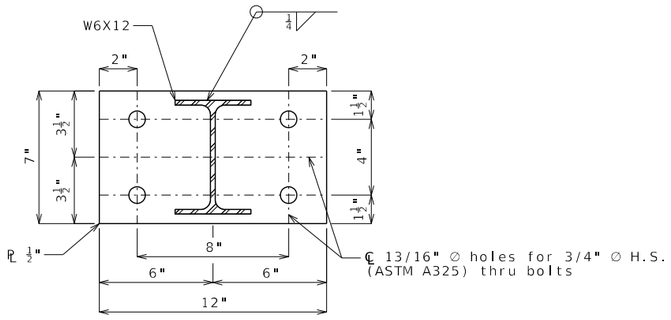

SECTION B-B

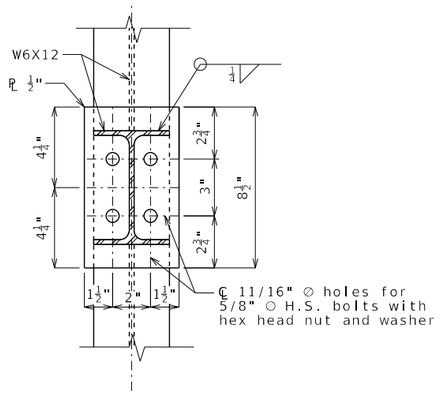

SECTION E-E

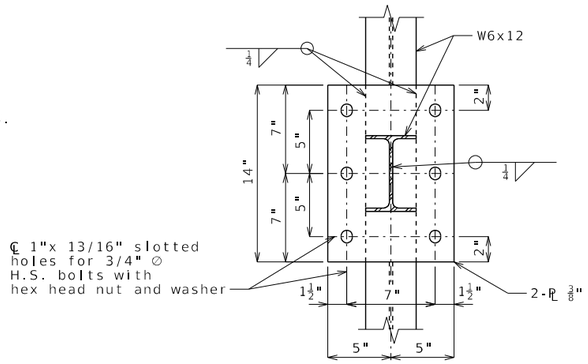

SECTION C-C
(Back to back bolted)

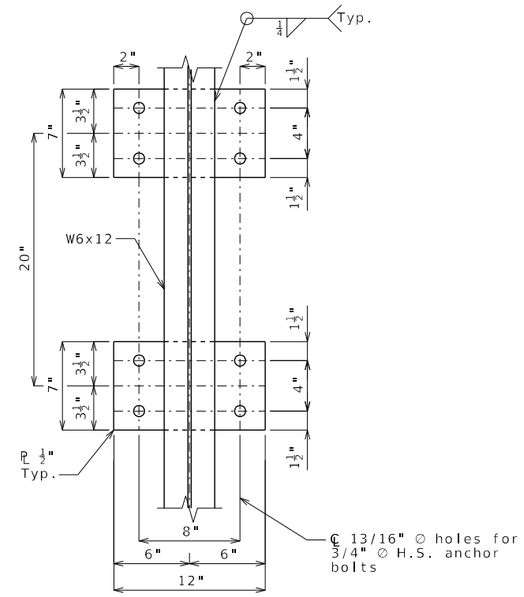

SECTION D-D

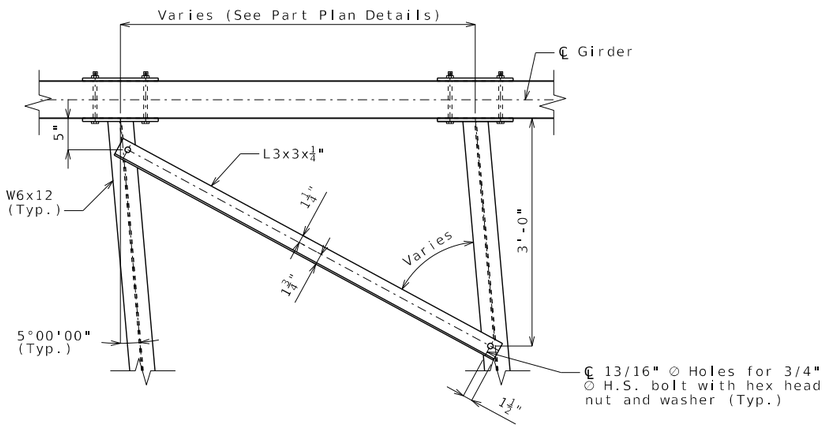

DETAIL A

Notes:

For locations of Sections B-B, C-C, D-D, E-E and Detail A, see Sheets No. 27 & 28.

For Eastbound I-270 Sign Bracket Details, see Sheet No. 27.

For Westbound I-270 Sign Bracket Details, see Sheet No. 28.

SIGN BRACKET DETAILS

Detailed August 2025
Checked August 2025

Note: This drawing is not to scale. Follow dimensions.

STATE OF MISSOURI
RYAN DAVID SHAW
NUMBER PE-2017000388
PROFESSIONAL ENGINEER
THIS SHEET HAS BEEN SIGNED, SEALED AND DATED ELECTRONICALLY

DATE PREPARED 4/1/2026
ROUTE I-270 | STATE MO
DISTRICT BR | SHEET NO. 29
COUNTY ST. LOUIS
JOB NO. J6I3020D
CONTRACT ID.
PROJECT NO.
BRIDGE NO. A9398

DESCRIPTION	DATE

MISSOURI HIGHWAYS AND TRANSPORTATION COMMISSION
105 WEST CAPITOL
JEFFERSON CITY, MO 65102
1-888-ASK-MODOT (1-888-275-6636)

HDR Engineering, Inc.
1001 Highlands Plaza Drive
Suite 200
St. Louis, MO 63110
314-425-8300
Certificate of Authority: 000856

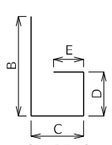

SHAPE 6
or 6S

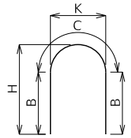

SHAPE 7

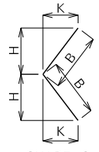

SHAPE 8
or 8S

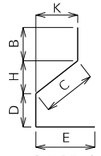

SHAPE 9
or 9S

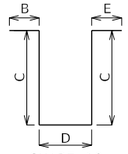

SHAPE 10
or 10S

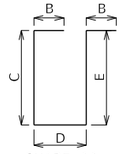

SHAPE 11
or 11S

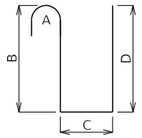

SHAPE 12

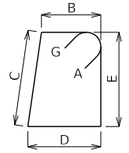

SHAPE 13S

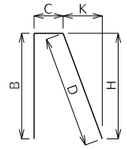

SHAPE 14
or 14S

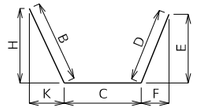

SHAPE 15
or 15S

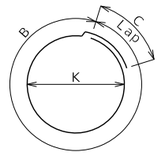

SHAPE 16

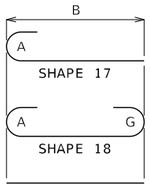

SHAPE 17
SHAPE 18
SHAPE 20

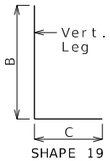

SHAPE 19
or 19S

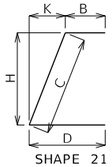

SHAPE 21
or 21S

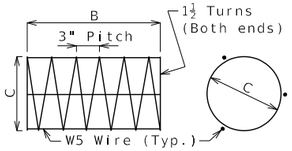

SHAPE 22

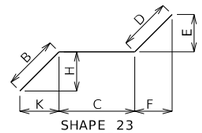

SHAPE 23
or 23S

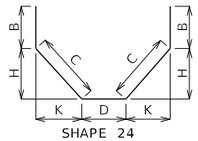

SHAPE 24
or 24S

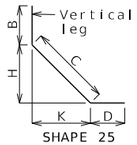

SHAPE 25
or 25S

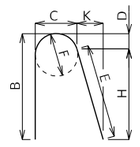

SHAPE 26

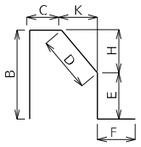

SHAPE 27S

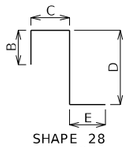

SHAPE 28
or 28S

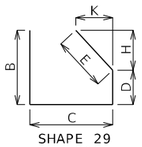

SHAPE 29
or 29S

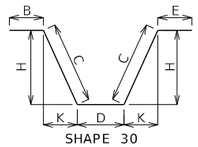

SHAPE 30
or 30S

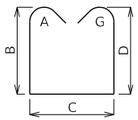

SHAPE 31S

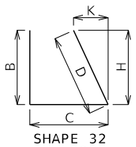

SHAPE 32
or 32S

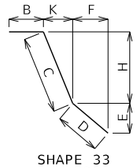

SHAPE 33
or 33S

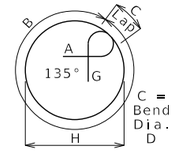

SHAPE 34S

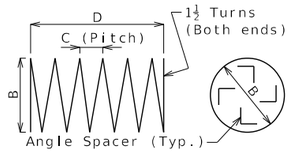

SHAPE 35 (1)

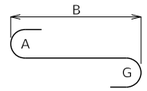

SHAPE 36

Finished Bend Diameters D and Hook Dimensions

Standard Pin Bend Shapes

Size	Case	D	A or G		J
			90°	180°	180°
#4	1	3"	8"	6"	4"
#5	1	3¾"	10"	7"	5"
#6	1	4½"	12"	8¼"	6"
#7	2	5¼"	14"	9⅜"	7"
	3	7"	15"	11½"	8¾"
#8	2	6"	16"	11"	8"
	3	8"	17"	13¼"	10"
#9	1	9½"	19½"	15½"	11¾"
#10	1	10¾"	22"	17½"	13¼"
#11	1	12"	24½"	19½"	14⅞"
#14	1	18¼"	31¼"	27½"	21⅝"
#18	1	24"	41½"	36¾"	28½"

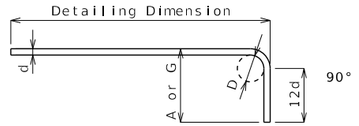

Stirrup Pin Bend Shapes (S)

Size	Case	D	A or G			H	J
			90°	135°	180°	135°	180°
#4	2	2"	4½"	4½"	5"	2⅝"	3"
	3	3"	5"	5¼"	6"	3"	4"
#5	2	2½"	5¾"	5¾"	5¾"	3⅝"	3¾"
	3	3¾"	6¼"	6½"	7"	3⅞"	5"
#6	1	4½"	12"	7¾"	8¼"	4⅝"	6"

Applicable for all grades of steel.

Case 1 applies to all reinforcement. Case 2 applies to all reinforcement except for galvanized bars. Case 3 applies to galvanized bars only.

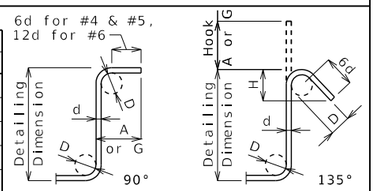

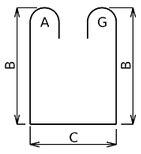

SHAPE 37S

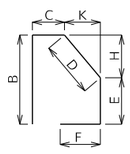

SHAPE 38S

BENDING DIAGRAMS

All dimensions are out to out.

Shapes ending with an S shall be bent in accordance with stirrup pin bend shapes.

Unless otherwise noted, finished bending diameter D is the same for all bends of a shape.

(1) Shall be a deformed or plain spiral bar or wire.

Four angle or channel spacers are required for each column spiral. Spacers are to be placed on inside of spirals. Length and weight of column spirals do not include splices or spacers.

Reinforcing Steel Totals (Pounds)

		Substructure		Superstructure					Entire Bridge	
				Slab			Corral	Slip		
	Size	Plain	Galv.	Plain	Galv.	Barrier	Curb	Form	Plain	Galv.
By Size	W5	0	0	0	0	0	0	0	0	0
	4	0	37	0	1,493	0	0	0	0	1,530
	5	0	12,390	0	41,263	7,060	6,075	373	0	67,161
	6	0	1,753	0	42,307	0	0	0	0	44,060
	7	0	0	0	5,161	0	0	0	0	5,161
	8	0	3,764	0	15,126	0	0	0	0	18,890
	9	0	0	0	0	0	0	0	0	0
	10	0	31,891	0	0	0	0	0	0	31,891
	11	0	0	0	0	0	0	0	0	0
	14	0	0	0	0	0	0	0	0	0
	18	0	0	0	0	0	0	0	0	0
By Type		0	49,835	0	105,350	7,060	6,075	373	0	168,693

All reinforcing steel shall be galvanized unless otherwise specified.

Products used to repair damaged zinc coating shall not contain aluminum.

Reinforcing steel (ASTM A706 Grade 60) fy = 60,000 psi.

BENDING DIAGRAMS AND REINFORCING STEEL TOTALS

Detailed August 2025
Checked August 2025

Note: This drawing is not to scale. Follow dimensions.

STATE OF MISSOURI
RYAN DAVID SHAW
NUMBER PE-2017003368
PROFESSIONAL ENGINEER
THIS SHEET HAS BEEN SIGNED, SEALED AND DATED ELECTRONICALLY

DATE PREPARED 4/1/2026
ROUTE I-270 | STATE MO
DISTRICT BR | SHEET NO. 30
COUNTY ST. LOUIS
JOB NO. J6I3020D
CONTRACT ID.
PROJECT NO.
BRIDGE NO. A9398

DESCRIPTION | DATE

MISSOURI HIGHWAYS AND TRANSPORTATION COMMISSION
105 WEST CAPITOL
JEFFERSON CITY, MO 65102
1-888-ASK-MODOT (1-888-275-6636)

HDR Engineering, Inc.
1001 Highlands Plaza Drive
Suite 200
St. Louis, MO 63110
314-425-8300
Certificate of Authority: 000856

Bill of Reinforcing Steel

No. Req.	Size/ Mark	Location	Codes C	SH	V	Dimensions B ft in.	C ft in.	D ft in.	E ft in.	F ft in.	H ft in.	K ft in.	Nom. Length ft in.	Actual Length ft in.	Weight lb
		Substructure													
		Intermediate Bent No. 2													
8	10 H200	BEAM	G	17		48 6.00							49 11	49 11	1,718
8	10 H201	BEAM	G	17		33 3.00							34 8	34 8	1,193
12	6 H202	BEAM	G	20		44 11.00							44 11	44 11	810
12	6 H203	BEAM	G	20		33 3.00							33 3	33 3	599
8	8 H204	BEAM	G	17		47 2.00							48 3	48 3	1,031
8	8 H205	BEAM	G	17		33 3.00							34 4	34 4	733
8	8 H206	BEAM	G	20		47 2.00							47 2	47 2	1,007
8	8 H207	BEAM	G	20		15 6.00							15 6	15 6	331
8	8 H208	BEAM	G	20		31 0.00							31 0	31 0	662
8	6 H209	BEAM	G	20		4 8.00							4 8	4 8	56
31	5 U200	BEAM	G	13S		3 9.00	3 9.00	3 9.00	3 9.00				16 2	15 9	509
5	5 U201	BEAM	G	10S			3 9.00	3 9.00					11 3	11 0	57
40	5 U202	BEAM	G	13S		3 9.00	4 0.00	3 9.00	4 0.00				16 8	16 3	678
10	5 U203	BEAM	G	10S			4 0.00	3 9.00					11 9	11 6	120
52	5 U204	BEAM	G	13S		3 9.00	4 3.25	3 9.00	4 3.25				17 3	16 10	913
10	5 U205	BEAM	G	10S			4 3.00	3 9.00					12 3	12 0	125
10	4 U206	BEAM	G	10S			12.00	3 9.00					5 9	5 7	37
17	6 U207	BEAM	G	10S			12.00	3 9.00					5 9	5 5	138
30	10 V200	DRILLED SHAFT	G	20		60 0.00							60 0	60 0	7,745
30	10 V201	DRILLED SHAFT	G	20		52 3.00							52 3	52 3	6,745
30	10 V202	COLUMN	G	17		50 10.00							52 3	52 3	6,745
30	10 V203	COLUMN	G	17		58 7.00							60 0	60 0	7,745
5	5 P200	DRILLED SHAFT	G	35		2 6.00	6.00	80 9.00					1292 0	1265 1	6,597
5	5 P201	COLUMN	G	35		2 6.00	4.00	22 4.00					549 9	538 4	2,807
60	5 P202	BEAM	G	34S		7 10.25	3.75				2 6.00		9 4	9 4	584
40	6 D200	BEAM	G	20		2 6.00							2 6	2 6	150
		Superstructure													
		End Bent No. 1													
8	7 H100	BEAM	G	20		46 0.00							46 0	46 0	752
8	7 H101	BEAM	G	20		36 0.00							36 0	36 0	589
4	6 H102	BEAM	G	20		46 0.00							46 0	46 0	276
4	6 H103	BEAM	G	20		36 0.00							36 0	36 0	216
4	7 H104	BEAM	G	20		35 5.00							35 5	35 5	290
4	7 H105	BEAM	G	20		17 4.00							17 4	17 4	142
4	7 H106	BEAM	G	20		13 3.00							13 3	13 3	108
4	7 H107	DIAPHRAGM	G	20		48 2.00							48 2	48 2	394
4	7 H108	DIAPHRAGM	G	20		32 6.00							32 6	32 6	266
2	6 H109	DIAPHRAGM	G	20		2 0.00							2 0	2 0	6
4	6 H110	DIAPHRAGM	G	20		3 2.00							3 2	3 2	19
2	6 H111	DIAPHRAGM	G	20		2 5.00							2 5	2 5	7
8	6 H112	DIAPHRAGM	G	20		5 3.00							5 3	5 3	63
16	6 H113	DIAPHRAGM	G	20		8 0.00							8 0	8 0	192
8	6 H114	DIAPHRAGM	G	20		6 6.00							6 6	6 6	78
4	6 H115	DIAPHRAGM	G	20		47 4.00							47 4	47 4	284
4	6 H116	DIAPHRAGM	G	20		32 6.00							32 6	32 6	195
9	6 H117	WING	G	20		9 1.00							9 1	9 1	123
9	6 H118	WING	G	6		9 0.50	12.00						10 1	9 11	134
9	6 H119	WING	G	20		9 1.00							9 1	9 1	123
9	6 H120	WING	G	6		9 1.00	12.00						10 1	9 11	134
4	8 H121	WING	G	20		10 6.00							10 6	10 6	112
4	8 H122	WING	G	6		10 6.00	17.00						11 11	11 8	125
4	8 H123	WING	G	20		10 6.00							10 6	10 6	112
4	8 H124	WING	G	6		10 6.00	17.00						11 11	11 8	125
9	5 H125	STRAND TIE	G	23		15.00	3 2.25	15.00	2.50	14.75	2.50	14.75	5 8	5 8	53
75	5 H126	APP. NOTCH	G	19		2 0.00	15.00						3 3	3 1	241
14	5 U100	BEAM	G	37S		4 10.00	2 9.50						13 8	13 5	196
21	4 U101	BEAM	G	13S		2 9.50	2 8.00	2 9.50	2 8.00				11 10	11 6	161
19	5 U102	BEAM	G	37S		5 2.50	2 9.50						14 5	14 2	280
22	4 U103	BEAM	G	13S		2 9.50	2 11.00	2 9.50	2 11.00				12 4	12 0	176
6	4 U104	BEAM	G	10S			2 11.00	2 9.50					8 8	8 5	34
5	5 U105	BEAM	G	37S		5 4.75	2 9.50						14 9	14 6	76
12	4 U106	BEAM	G	13S		2 9.50	3 2.75	2 9.50	3 2.75				12 11	12 8	101
2	4 U107	BEAM	G	10S			5 2.75	2 9.50					13 3	13 1	17

Bill of Reinforcing Steel

No. Req.	Size/ Mark	Location	Codes C	SH	V	Dimensions B ft in.	C ft in.	D ft in.	E ft in.	F ft in.	H ft in.	K ft in.	Nom. Length ft in.	Actual Length ft in.	Weight lb
		Superstructure (cont.)													
		End Bent No. 1 (cont.)													
49	5 U108	DIAPHRAGM	G	37S		3 2.50	2 3.25						9 10	9 7	491
49	6 U109	DIAPHRAGM	G	19S		2 6.50	2 9.50						5 4	5 2	380
100	6 U110	DIAPHRAGM	G	19S		2 8.50	4 3.00						7 0	6 10	1,026
22	5 V100	BEAM	G	17		5 5.00							6 0	6 0	138
63	6 V101	BEAM	G	20		2 6.00							2 6	2 6	237
18	6 V102	WING	G	20		6 6.00							6 6	6 6	176
18	6 V103	WING	G	20		6 8.00							6 8	6 8	180
9	6 F100	BRACE	G	23		20.00	4 8.00	20.00	15.25	13.00	15.25	13.00	8 0	7 11	107
4	6 F101	DIAPHRAGM	G	21		5 5.00	2 9.50				2 9.00	5.50	8 3	8 2	49
9	6 F102	BRACE	G	23		20.00	5 5.00	20.00	12.75	15.25	12.75	15.25	8 9	8 8	117
4	6 F103	DIAPHRAGM	G	21			2 9.50	5 5.00			2 9.00	5.50	8 3	8 0	48
		Intermediate Bent No. 2 Diaphragm													
16	6 H250	DIAPHRAGM	G	20		5 3.00							5 3	5 3	126
32	4 H251	DIAPHRAGM	G	20		8 0.00							8 0	8 0	171
16	6 H252	DIAPHRAGM	G	20		4 5.00							4 5	4 5	106
4	5 H253	STRAND TIE	G	23			3 2.25	15.00	2.50	14.75			4 5	4 5	18
14	5 H254	STRAND TIE	G	23		15.00	3 2.25	15.00	2.50	14.75	2.50	14.75	5 8	5 8	83
8	6 U250	DIAPHRAGM	G	28S			22.00	2 6.25	22.00				6 2	5 10	70
32	6 U251	DIAPHRAGM	G	28S			2 3.25	2 6.25	22.00				6 8	6 4	304
32	6 U252	DIAPHRAGM	G	28S			2 3.25	3 2.00	22.00				7 3	6 11	332
80	4 U253	DIAPHRAGM	G	28S			23.00	3 1.75	15.00				6 4	6 2	330
12	5 U254	DIAPHRAGM	G	6		4 4.75	11.00	17.25					6 9	6 6	81
4	5 U255	DIAPHRAGM	G	6		4 4.75	11.00						5 4	5 2	22
8	5 V250	DIAPHRAGM	G	20		3 4.00							3 4	3 4	28
		End Bent No. 3													
8	7 H300	BEAM	G	20		46 0.00							46 0	46 0	752
8	7 H301	BEAM	G	20		36 0.00							36 0	36 0	589
4	6 H302	BEAM	G	20		46 0.00							46 0	46 0	276
4	6 H303	BEAM	G	20		36 0.00							36 0	36 0	216
4	7 H304	BEAM	G	20		45 2.00							45 2	45 2	369
4	7 H305	BEAM	G	20		17 4.00							17 4	17 4	142
4	7 H306	BEAM	G	20		13 3.00							13 3	13 3	108
4	7 H307	DIAPHRAGM	G	20		48 2.00							48 2	48 2	394
4	7 H308	DIAPHRAGM	G	20		32 6.00							32 6	32 6	266
2	6 H309	DIAPHRAGM	G	20		2 0.00							2 0	2 0	6
4	6 H310	DIAPHRAGM	G	20		3 2.00							3 2	3 2	19
2	6 H311	DIAPHRAGM	G	20		2 5.00							2 5	2 5	7
8	6 H312	DIAPHRAGM	G	20		5 3.00							5 3	5 3	63
16	6 H313	DIAPHRAGM	G	20		8 0.00							8 0	8 0	192
8	6 H314	DIAPHRAGM	G	20		6 6.00							6 6	6 6	78
4	6 H315	DIAPHRAGM	G	20		47 4.00							47 4	47 4	284
4	6 H316	DIAPHRAGM	G	20		32 6.00							32 6	32 6	195
10	6 H317	WING	G	20		9 1.00							9 1	9 1	136
10	6 H318	WING	G	6		9 0.50	12.00						10 1	9 11	149
9	6 H319	WING	G	20		9 1.00							9 1	9 1	123
9	6 H320	WING	G	6		9 1.00	12.00						10 1	9 11	134
4	8 H321	WING	G	20		10 6.00							10 6	10 6	112
4	8 H322	WING	G	6		10 6.00	17.00						11 11	11 8	125
4	8 H323	WING	G	20		10 6.00							10 6	10 6	112
4	8 H324	WING	G	6		10 6.00	17.00						11 11	11 8	125
9	5 H325	STRAND TIE	G	23		15.00	3 2.25	15.00	2.50	14.75	2.50	14.75	5 8	5 8	53
75	5 H326	APP. NOTCH	G	19		2 0.00	15.00						3 3	3 1	241
10	5 U300	BEAM	G	37S		4 10.50	2 9.50						13 9	13 6	141
14	4 U301	BEAM	G	13S		2 9.50	2 8.00	2 9.50	2 8.00				11 8	11 4	106
23	5 U302	BEAM	G	37S		5 4.00	2 9.50						14 8	14 5	345
29	4 U303	BEAM	G	13S		2 9.50	3 1.00	2 9.50	3 1.00				12 8	12 4	239
6	4 U304	BEAM	G	10S			3 1.00	2 9.50					9 0	8 10	35
5	5 U305	BEAM	G	37S		5 6.75	2 9.50						15 1	14 10	77
12	4 U306	BEAM	G	13S		2 9.50	3 5.25	2 9.50	3 5.25				13 4	13 1	105
2	4 U307	BEAM	G	10S			5 5.25	2 9.50					13 8	13 6	18
49	5 U308	DIAPHRAGM	G	37S		3 2.50	2 3.25						9 11	9 8	494
49	6 U309	DIAPHRAGM	G	19S		2 5.50	2 9.50						5 3	5 1	374

Nominal lengths are based on out to out dimensions shown in bending diagrams and are listed to the nearest inch for fabricator's use. Actual lengths are measured along centerline bar to the nearest inch. Weights are based on actual lengths.

For bending diagrams and steel reinforcing totals, see Sheet No. 30.

Detailed August 2025
Checked August 2025

Reinforcing Steel (ASTM A706 Grade 60) fy = 60,000 psi.

BILL OF REINFORCING STEEL

Note: This drawing is not to scale. Follow dimensions.

Sheet No. 31 of 43

Codes: C = Required coatings, where E = Epoxy Coated and G = Galvanized.

SH = Required shape, see bending diagrams.

V = Sets of varied bars and number of bars of each length. Bar dimensions vary in equal increments between dimensions shown on this line and the following line and the actual length dimension shown on this line and the following line vary by the specified increment.

STATE OF MISSOURI
RYAN DAVID SHAW
NUMBER PE-2017000388
PROFESSIONAL ENGINEER

THIS SHEET HAS BEEN SIGNED, SEALED AND DATED ELECTRONICALLY

DATE PREPARED 4/1/2026

ROUTE	STATE
I-270	MO
DISTRICT	SHEET NO.
BR	31

COUNTY: ST. LOUIS

JOB NO.: J6I3020D

CONTRACT ID.:

PROJECT NO.:

BRIDGE NO.: A9398

DESCRIPTION	DATE

MISSOURI HIGHWAYS AND TRANSPORTATION COMMISSION
105 WEST CAPITOL
JEFFERSON CITY, MO 65102
1-888-ASK-MODOT (1-888-275-6636)

HDR Engineering, Inc.
1001 Highlands Plaza Drive
Suite 200
St. Louis, MO 63110
314-425-8300
Certificate of Authority: 000856

c:\pwworking\central01\d4954830\B_A9398_031_J6I3020D.dgn 2:37:43 PM 4/1/2026

Bill of Reinforcing Steel

No. Req.	Size/ Mark	Location	Codes C	SH	V	Dimensions B ft in.	C ft in.	D ft in.	E ft in.	F ft in.	H ft in.	K ft in.	Nom. Length ft in.	Actual Length ft in.	Weight lb
		Superstructure (cont.)													
		End Bent No. 3 (cont.)													
100	6 U310	DIAPHRAGM	G	19S		2 8.50	4 3.00						7 0	6 10	1,026
22	5 V300	BEAM	G	17		5 6.00							6 1	6 1	140
63	6 V301	BEAM	G	20		2 5.00							2 5	2 5	229
18	6 V302	WING	G	20		6 7.00							6 7	6 7	178
18	6 V303	WING	G	20		6 2.00							6 2	6 2	167
9	6 F300	BRACE	G	23		20.00	4 8.00	20.00	15.25	13.00	15.25	13.00	8 0	7 11	107
4	6 F301	DIAPHRAGM	G	21		5 5.00	2 9.50				2 9.00	5.50	8 3	8 2	49
9	6 F302	BRACE	G	23		20.00	5 5.00	20.00	12.75	15.25	12.75	15.25	8 9	8 8	117
4	6 F303	DIAPHRAGM	G	21			2 9.50	5 5.00			2 9.00	5.50	8 3	8 0	48
		Slab													
216	5 S1	SLAB	G	20		48 0.00							48 0	48 0	10,814
12	5 S2	SLAB	G	20	1	46 2.00							46 2	46 2	
		(INCR. = 3'-8 7/8")				5 0.00							5 0	5 0	320
204	5 S3	SLAB	G	20		46 11.00							46 11	46 11	9,983
11	5 S4	SLAB	G	20	1	42 5.00							42 5	42 5	
		(INCR. = 3'-8 7/8")				5 0.00							5 0	5 0	272
8	5 S5	SLAB	G	20	1	31 2.00							31 2	31 2	
		(INCR. = 3'-10 1/2")				5 0.00							5 0	5 0	151
208	5 S6	SLAB	G	20		32 1.00							32 1	32 1	6,960
7	5 S7	SLAB	G	20	1	27 6.00							27 6	27 6	
		(INCR. = 3'-9")				5 0.00							5 0	5 0	119
189	5 S8	SLAB	G	20		47 11.00							47 11	47 11	9,446
60	8 S9	SLAB	G	20		20 0.00							20 0	20 0	3,204
60	8 S10	SLAB	G	20		47 6.00							47 6	47 6	7,610
15	6 S11	SLAB	G	20	1	44 11.00							44 11	44 11	
		(INCR. = 2'-11 7/8")				3 1.00							3 1	3 1	541
265	6 S12	SLAB	G	20		46 4.00							46 4	46 4	18,442
15	6 S13	SLAB	G	20	1	44 7.00							44 7	44 7	
		(INCR. = 2'-11 7/8")				2 9.00							2 9	2 9	533
10	6 S14	SLAB	G	20	1	29 10.00							29 10	29 10	
		(INCR. = 3'-0")				2 11.00							2 11	2 11	246
270	6 S15	SLAB	G	20		32 1.00							32 1	32 1	13,011
10	6 S16	SLAB	G	20	1	30 3.00							30 3	30 3	
		(INCR. = 2'-11 7/8")				3 5.00							3 5	3 5	253
60	8 S17	SLAB	G	20		21 0.00							21 0	21 0	3,364
		Barriers													
		Type H													
20	5 K1	BARRIER	G	27S		3 5.00	9.25	5.25	2 11.75		5.25	1.00	7 7	7 4	153
48	5 K2	BARRIER	G	27S		3 5.00	9.25	14.50	2 2.75		14.25	2.75	7 8	7 5	371
4	5 K3	BARRIER	G	27S		22.50	9.25	14.50	7.75	12.00	14.25	2.75	5 6	5 2	22
72	5 K4	BARRIER	G	19S		2 5.00	10.00						3 3	3 2	238
20	5 K5	BARRIER	G	38S				19.25	9.50	8.25	18.75	4.25	3 1	2 11	61
52	5 K6	BARRIER	G	21S			2 5.00	10.00			2 4.25	6.00	3 3	3 1	168
28	5 K7	BARRIER	G	20		10 9.00							10 9	10 9	314
28	5 K8	BARRIER	G	20		11 0.00							11 0	11 0	321
280	5 R1	BARRIER	G	14S		2 5.00	6.50	2 5.50			2 5.00	5.50	5 5	5 2	1,509
280	5 R2	BARRIER	G	19S		20.50	9.50						2 6	2 4	691
280	5 R3	BARRIER	G	27S			9.50	15.25	5.00	12.00	15.00	3.00	3 6	3 4	973
32	5 R4	BARRIER	G	20		11 9.00							11 9	11 9	392
16	5 R5	BARRIER	G	20		55 5.00							55 5	55 5	925
16	5 R6	BARRIER	G	20		55 3.00							55 3	55 3	922
		Corral Curb													
592	5 R100	CORRAL CURB	G	19S		2 11.50	9.00						3 9	3 7	2,213
72	5 R101	CORRAL CURB	G	19S	8	2 11.00	8.00						3 7	3 6	
		(INCR. = 1 1/2")				2 1.00	6.00						2 7	2 6	222
96	5 R102	CORRAL CURB	G	20		2 0.00							2 0	2 0	200
20	5 R103	CORRAL CURB	G	20		55 5.00							55 5	55 5	1,156
40	5 R104	CORRAL CURB	G	20		11 9.00							11 9	11 9	490
20	5 R105	CORRAL CURB	G	20		55 3.00							55 3	55 3	1,153
20	5 R106	CORRAL CURB	G	20		2 3.00							2 3	2 3	47
20	5 R107	CORRAL CURB	G	20		2 5.00							2 5	2 5	50
8	5 R108	CORRAL CURB	G	20		19 9.00							19 9	19 9	165
24	5 R109	CORRAL CURB	G	20	8	3 10.00							3 10	3 10	
		(INCR. = 5'-2 1/2")				14 3.00							14 3	14 3	226
8	5 R110	CORRAL CURB	G	20		18 4.00							18 4	18 4	153

Bill of Reinforcing Steel

No. Req.	Size/ Mark	Location	Codes C	SH	V	Dimensions B ft in.	C ft in.	D ft in.	E ft in.	F ft in.	H ft in.	K ft in.	Nom. Length ft in.	Actual Length ft in.	Weight lb
		Superstructure (cont.)													
		Slip Form													
24	5 C1	SLIP FORM	G	20		12 0.00							12 0	12 0	300
8	5 C2	SLIP FORM	G	20		8 9.00							8 9	8 9	73

Nominal lengths are based on out to out dimensions shown in bending diagrams and are listed to the nearest inch for fabricator's use. Actual lengths are measured along centerline bar to the nearest inch. Weights are based on actual lengths.

For bending diagrams and steel reinforcing totals, see Sheet No. 30.

Detailed August 2025
Checked August 2025

Reinforcing Steel (ASTM A706 Grade 60) fy = 60,000 psi.

Codes: C = Required coatings, where E = Epoxy Coated and G = Galvanized.
SH = Required shape, see bending diagrams.
V = Sets of varied bars and number of bars of each length. Bar dimensions vary in equal increments between dimensions shown on this line and the following line and the actual length dimension shown on this line and the following line vary by the specified increment.

BILL OF REINFORCING STEEL

Note: This drawing is not to scale. Follow dimensions.

STATE OF MISSOURI
RYAN DAVID SHAW
NUMBER PE-2011000388
PROFESSIONAL ENGINEER
THIS SHEET HAS BEEN SIGNED, SEALED AND DATED ELECTRONICALLY

DATE PREPARED 4/1/2026
ROUTE I-270 | STATE MO
DISTRICT BR | SHEET NO. 32
COUNTY ST. LOUIS
JOB NO. J6I3020D
CONTRACT ID.
PROJECT NO.
BRIDGE NO. A9398

DESCRIPTION | DATE

MISSOURI HIGHWAYS AND TRANSPORTATION COMMISSION
105 WEST CAPITOL
JEFFERSON CITY, MO 65102
1-888-ASK-MODOT (1-888-275-6636)

HDR Engineering, Inc.
1001 Highlands Plaza Drive
Suite 200
St. Louis, MO 63110
314-425-8300
Certificate of Authority: 000856

c:\pwworking\central01\d4954830\B_A9398_032_J6I3020D.dgn 2:37:51 PM 4/1/2026

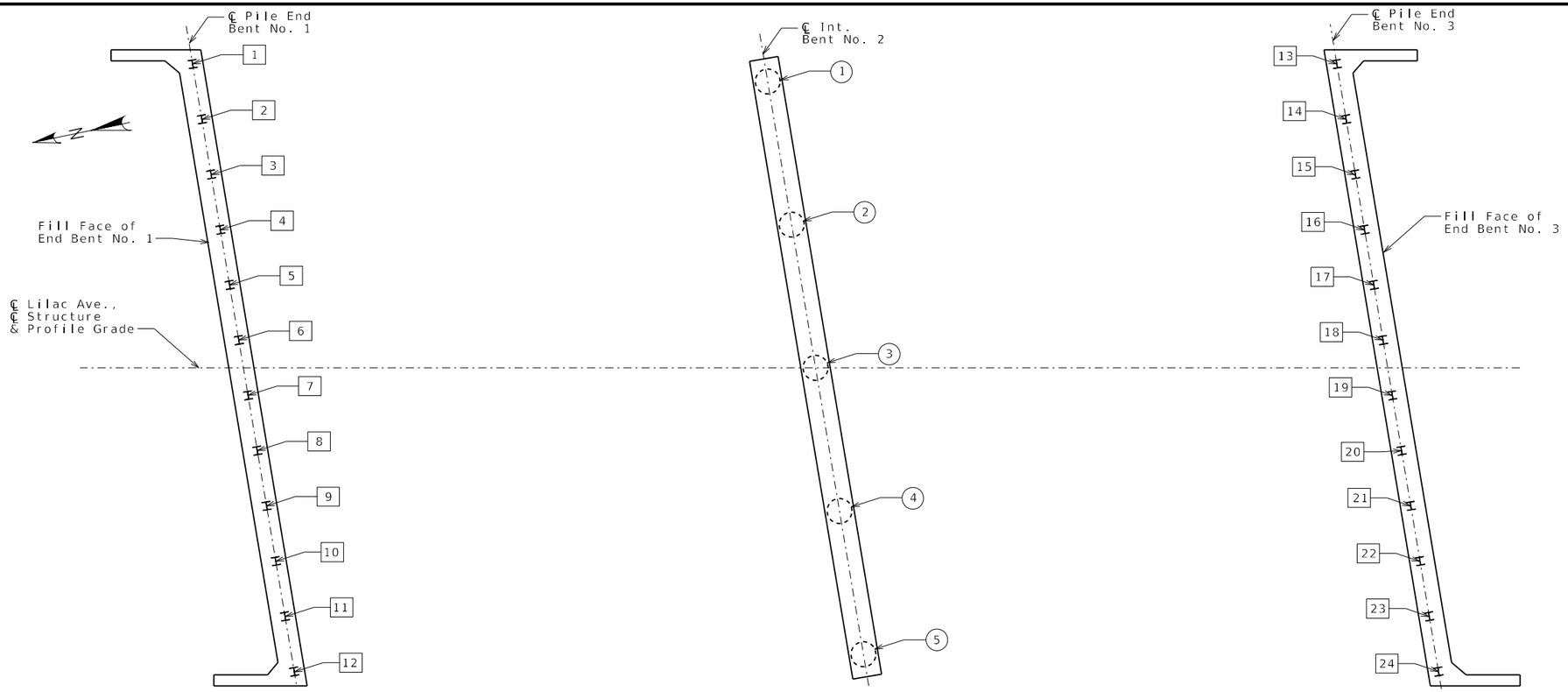

PART PLAN SHOWING PILE & DRILLED SHAFT NUMBERING FOR RECORDING AS-BUILT PILE DATA & AS-BUILT DRILLED SHAFT DATA

As-Built Pile Data

Pile No.	Length in Place (ft)	Computed Nominal Axial Compressive Resistance (kips)	Remarks
			End Bent No. 1
1			
2			
3			
4			
5			
6			
7			
8			
9			
10			
11			
12			

As-Built Drilled Shaft Data

Shaft No.	Top of Sound Rock (Elev.)	Tip of Casing (Elev.)	Bottom of Rock Socket (Elev.)	Remarks
				Int. Bent No. 2
1				
2				
3				
4				
5				

Note:
Indicate in remarks column:
A. Pile type and grade
B. Batter
C. Driven to practical refusal

This sheet to be completed by MoDOT construction personnel.

As-Built Pile Data

Pile No.	Length in Place (ft)	Computed Nominal Axial Compressive Resistance (kips)	Remarks
			End Bent No. 3
13			
14			
15			
16			
17			
18			
19			
20			
21			
22			
23			
24			

AS-BUILT PILE & DRILLED SHAFT DATA

Detailed August 2025
Checked August 2025

Note: This drawing is not to scale. Follow dimensions.

STATE OF MISSOURI
RYAN DAVID SHAW
NUMBER PE-2017000368
PROFESSIONAL ENGINEER
THIS SHEET HAS BEEN SIGNED, SEALED AND DATED ELECTRONICALLY

DATE PREPARED 4/1/2026
ROUTE I-270 | STATE MO
DISTRICT BR | SHEET NO. 33
COUNTY ST. LOUIS
JOB NO. J6I3020D
CONTRACT ID.
PROJECT NO.
BRIDGE NO. A9398

DESCRIPTION
DATE

MISSOURI HIGHWAYS AND TRANSPORTATION COMMISSION
MoDOT
105 WEST CAPITOL
JEFFERSON CITY, MO 65102
1-888-ASK-MODOT (1-888-275-6636)

HDR Engineering, Inc.
1001 Highlands Plaza Drive
Suite 200
St. Louis, MO 63110
314-425-8300
Certificate of Authority: 000856

c:\pwworking\central01\d4954830\B_A9398_033_J6I3020D.dgn 2:38:00 PM 4/1/2026

Missouri Department of Transportation
Construction and Materials

BORING NO. A9398-101/A9501-4 Alt.
Page 1 of 2

Job No.: MG24029 **County:** St. Louis **Route:** Lilac Avenue
Design: **Skew:** **Location:** St. Louis County, Missouri
Bent: **Logged By:** B. Nepal **Operator:** G. Shetley
Station: **Northing:** 1068396 **Date of Work:** 06/27/24-07/02/24
Offset: **Easting:** 904949.5 **Depth to Water:**
Elevation: 486.9 **Requested Northing:** **Depth Hole Open:**
Requested Station: **Requested Easting:** **Time Change:**
Requested Offset: **Equipment:** CME 750Y ,Split-Spoon Sampler, Shelby Tube, NQ
Requested Elevation: **Location Note:**
Drill No.: UES **Hammer Efficiency:** 95% **Drilling Method:** Mud Rotary

Depth (ft)	Graphic	Description	Elevation (ft)	Sample Type	REC % (RQD %)	Blow Counts (N_{60})	Shear Data	Field Tests	Index Tests
0		0.0-0.5' ASPHALT (6")							
		0.5-1.5' CONCRETE (12")	485						
		1.5-4.0' Brown, SAND (SP), fine to medium grained, trace clay			100				MC = 10.0%
5		4.0-37.0' Brown, SAND (SP), fine to coarse grained, very loose to medium dense, trace gravel			100				MC = 13.6%
			480		100				
					94	3-2-2 (6)			MC = 8.1%
10		11.0' - 2.0% passing No. 200 sieve	475		78	1-2-3 (8)			MC = 15.7%
					100	2-2-2 (6)			MC = 16.0%
15			470		100	2-4-3 (11)			MC = 17.7%
					100	3-3-3 (10)			MC = 10.2%
20		20.0' - mud rotary drilling below 20 ft.							
			465						
					56	5-5-6 (17)			
25									
			460						
					50	4-5-5 (16)			
30									
			455						
35		33.5' - 4.9% passing No. 200 sieve			56	5-4-4 (13)			

N_{60} = (Em/60)Nm N_{60} - Corrected N value for standard 60% SPT efficiency; Em - Measured hammer efficiency in percent; Nm - Observed N-value; (1) = Assumed, (2) = Actual

Coordinate System: **Coordinate Zone:** **Coordinate Proj. Factor:**
Coordinate Datum: **Coordinate Units:** U.S. Survey Feet

* Persons using this information are cautioned that the materials shown are determined by the equipment noted and accuracy of the "log of materials" is limited thereby and by judgement of the operator. THIS INFORMATION IS FOR DESIGN PURPOSES ONLY.

(Continued Next Page)

Missouri Department of Transportation
Construction and Materials

BORING NO. A9398-101/A9501-4 Alt.
Page 2 of 2

Job No.: MG24029 **County:** St. Louis **Route:** Lilac Avenue
Design: **Skew:** **Location:** St. Louis County, Missouri
Bent: **Logged By:** B. Nepal **Operator:** G. Shetley
Station: **Northing:** 1068396 **Date of Work:** 06/27/24-07/02/24
Offset: **Easting:** 904949.5 **Depth to Water:**
Elevation: 486.9 **Requested Northing:** **Depth Hole Open:**
Requested Station: **Requested Easting:** **Time Change:**
Requested Offset: **Equipment:** CME 750Y ,Split-Spoon Sampler, Shelby Tube, NQ
Requested Elevation: **Location Note:**
Drill No.: UES **Hammer Efficiency:** 95% **Drilling Method:** Mud Rotary

Depth (ft)	Graphic	Description	Elevation (ft)	Sample Type	REC % (RQD %)	Blow Counts (N_{60})	Shear Data	Field Tests	Index Tests
35									
			450						
		37.0-52.0' Brown, SAND (SW), fine to coarse grained, medium dense, with gravel							
40					44	7-6-5 (17)			
			445						
45		43.5' - 2.4% passing No. 200 sieve			33	4-6-8 (22)			
			440						
50					33	7-7-6 (21)			
			435						
		52.0-55.0' Grey, weathered SHALE			100	23-49-50/0.2"		PP >4.50 tsf	MC = 21.6%
55		55.0-65.0' Grey, SHALE, moderately to highly weathered, soft, very finely crystalline to aphanitic, moderately to highly fractured 56.3' - compressive strength = 11 psi 57.0' - compressive strength = 39 psi							
			430		87 (28)				
60									
			425		100 (75)				
65		Refusal at 54.7 feet. Bottom of borehole at 65.0 feet.							

N_{60} = (Em/60)Nm N_{60} - Corrected N value for standard 60% SPT efficiency; Em - Measured hammer efficiency in percent; Nm - Observed N-value; (1) = Assumed, (2) = Actual

Coordinate System: **Coordinate Zone:** **Coordinate Proj. Factor:**
Coordinate Datum: **Coordinate Units:** U.S. Survey Feet

* Persons using this information are cautioned that the materials shown are determined by the equipment noted and accuracy of the "log of materials" is limited thereby and by judgement of the operator. THIS INFORMATION IS FOR DESIGN PURPOSES ONLY.

LETTER BOREHOLE - MODOT_20151118.GDT - 12/27/24 13:14 - G:\PROJECT FILES\2024\MG24029 I-270 GAP FROM ROUTE 367 TO LILAC AVENUE\FIELD DATA\LILAC AVE\MODOT I-270 - LILAC AVE.GPJ

STATE OF MISSOURI
RYAN DAVID SHAW
NUMBER PE-2017003388
PROFESSIONAL ENGINEER
THIS SHEET HAS BEEN SIGNED, SEALED AND DATED ELECTRONICALLY

DATE PREPARED 4/1/2026
ROUTE I-270 | STATE MO
DISTRICT BR | SHEET NO. 34
COUNTY ST. LOUIS
JOB NO. J6I3020D
CONTRACT ID.
PROJECT NO.
BRIDGE NO. A9398

DESCRIPTION | DATE

MISSOURI HIGHWAYS AND TRANSPORTATION COMMISSION
105 WEST CAPITOL
JEFFERSON CITY, MO 65102
1-888-ASK-MODOT (1-888-275-6636)

HDR Engineering, Inc.
1001 Highlands Plaza Drive
Suite 200
St. Louis, MO 63110
314-425-8300
Certificate of Authority: 000856

BORING DATA

Note: For location of borings, see Sheet No. 1.

Detailed August 2025
Checked August 2025

Note: This drawing is not to scale. Follow dimensions.

c:\pwworking\central01\d4954830\B_A9398_034_J6I3020D.dgn 2:38:06 PM 4/1/2026

Missouri Department of Transportation
Construction and Materials

BORING NO. A9398-102/A9501-2
Page 1 of 2

Job No.: MG24029 **County:** St. Louis **Route:** Lilac Avenue
Design: **Skew:** **Location:** St. Louis County, Missouri
Bent: **Logged By:** J. Stauffer **Operator:** S. Conrad
Station: **Northing:** 1068409 **Date of Work:** 06/25/24-07/16/24
Offset: **Easting:** 904871.5 **Depth to Water:**
Elevation: 487.0 **Requested Northing:** **Depth Hole Open:**
Requested Station: **Requested Easting:** **Time Change:**
Requested Offset: **Equipment:** CME 55LC ,Split-Spoon Sampler, NQ
Requested Elevation: **Location Note:**
Drill No.: UES **Hammer Efficiency:** 79% **Drilling Method:** Mud Rotary

Depth (ft)	Graphic	Description	Elevation (ft)	Sample Type	REC % (RQD %)	Blow Counts (N_{60})	Shear Data	Field Tests	Index Tests
0		0.0-0.3' TOPSOIL (3")							
		0.3-6.0' FILL: Brown, lean CLAY (CL), with sand	485						
5				X	56	2-3-3 (8)		PP = 1.00 tsf	MC = 17.1%
		6.0-37.0' Brown, SAND (SP), fine to medium grained, medium dense	480						
10				X	89	3-4-4 (11)			MC = 11.0%
			475						
15		15.0' - mud rotary drilling below 15 ft.		X	83	3-4-4 (11)			MC = 9.8%
			470						
20				X	61	4-6-7 (17)			
		22.0' - trace gravel below 22 ft.	465						
25				X	50	5-5-6 (14)			
			460						
30				X	44	4-4-7 (14)			
			455						
35				X	72	4-4-6 (13)			

N_{60} = (Em/60)Nm N_{60} - Corrected N value for standard 60% SPT efficiency; Em - Measured hammer efficiency in percent; Nm - Observed N-value; (1) = Assumed, (2) = Actual

Coordinate System: **Coordinate Zone:** **Coordinate Proj. Factor:**
Coordinate Datum: **Coordinate Units:** U.S. Survey Feet

* Persons using this information are cautioned that the materials shown are determined by the equipment noted and accuracy of the "log of materials" is limited thereby and by judgement of the operator. THIS INFORMATION IS FOR DESIGN PURPOSES ONLY.

(Continued Next Page)

Missouri Department of Transportation
Construction and Materials

BORING NO. A9398-102/A9501-2
Page 2 of 2

Job No.: MG24029 **County:** St. Louis **Route:** Lilac Avenue
Design: **Skew:** **Location:** St. Louis County, Missouri
Bent: **Logged By:** J. Stauffer **Operator:** S. Conrad
Station: **Northing:** 1068409 **Date of Work:** 06/25/24-07/16/24
Offset: **Easting:** 904871.5 **Depth to Water:**
Elevation: 487.0 **Requested Northing:** **Depth Hole Open:**
Requested Station: **Requested Easting:** **Time Change:**
Requested Offset: **Equipment:** CME 55LC ,Split-Spoon Sampler, NQ
Requested Elevation: **Location Note:**
Drill No.: UES **Hammer Efficiency:** 79% **Drilling Method:** Mud Rotary

Depth (ft)	Graphic	Description	Elevation (ft)	Sample Type	REC % (RQD %)	Blow Counts (N_{60})	Shear Data	Field Tests	Index Tests
35		6.0-37.0' Brown, SAND (SP), fine to medium grained, medium dense *(continued)*							
		37.0-49.0' Brown, SAND (SW), fine to medium grained, with gravel	450						
40				X	56	8-7-6 (17)			
			445						
45				X	50	7-7-6 (17)			
			440						
50		49.0-52.0' Brown, fat CLAY (CH), trace sand		X	83	9-7-4 (14)		PP = 1.50 tsf	MC = 20.1%
		52.0-57.5' Grey, weathered SHALE	435						
55				X	0	50/0.4'			
		57.5-67.5' Grey, SHALE, moderately weathered, soft, moderately to highly fractured, aphanitic	430						
60				X	25 (0)				
			425						
65				X	40 (23)				
		Refusal at 54.0 feet. Bottom of borehole at 67.5 feet.	420						
				X	89 (83)				

N_{60} = (Em/60)Nm N_{60} - Corrected N value for standard 60% SPT efficiency; Em - Measured hammer efficiency in percent; Nm - Observed N-value; (1) = Assumed, (2) = Actual

Coordinate System: **Coordinate Zone:** **Coordinate Proj. Factor:**
Coordinate Datum: **Coordinate Units:** U.S. Survey Feet

* Persons using this information are cautioned that the materials shown are determined by the equipment noted and accuracy of the "log of materials" is limited thereby and by judgement of the operator. THIS INFORMATION IS FOR DESIGN PURPOSES ONLY.

LETTER BOREHOLE - MODOT_20151118.GDT - 12/27/24 13:14 - G:\PROJECT FILES\20241\MG24029 I-270 GAP FROM ROUTE 367 TO LILAC AVENUE\FIELD DATA\LILAC AVE\MODOT I-270 - LILAC AVE.GPJ

THIS SHEET HAS BEEN SIGNED, SEALED AND DATED ELECTRONICALLY

DATE PREPARED 4/1/2026
ROUTE I-270 STATE MO
DISTRICT BR SHEET NO. 35
COUNTY ST. LOUIS
JOB NO. J6I3020D
CONTRACT ID.
PROJECT NO.
BRIDGE NO. A9398

DESCRIPTION
DATE

MISSOURI HIGHWAYS AND TRANSPORTATION COMMISSION
105 WEST CAPITOL
JEFFERSON CITY, MO 65102
1-888-ASK-MODOT (1-888-275-6636)

HDR Engineering, Inc.
1001 Highlands Plaza Drive
Suite 200
St. Louis, MO 63110
314-425-8300
Certificate of Authority: 000856

BORING DATA

Note: For location of borings, see Sheet No. 1.

Detailed August 2025
Checked August 2025

Note: This drawing is not to scale. Follow dimensions.

c:\pwworking\central01\d4954830\B_A9398_035_J6I3020D.dgn 2:38:38 PM 4/1/2026

Missouri Department of Transportation
Construction and Materials

BORING NO. A9398-201
Page 1 of 3

Job No.: MG24029 **County:** St. Louis **Route:** Lilac Avenue
Design: **Skew:** **Location:** St. Louis County, Missouri
Bent: **Logged By:** B. Nepal **Operator:** G. Shetley
Station: **Northing:** 1068333 **Date of Work:** 06/24/24-06/27/24
Offset: **Easting:** 904947.8 **Depth to Water:**
Elevation: 487.8 **Requested Northing:** **Depth Hole Open:**
Requested Station: **Requested Easting:** **Time Change:**
Requested Offset: **Equipment:** CME 750Y ,Split-Spoon Sampler, NQ
Requested Elevation: **Location Note:**
Drill No.: UES **Hammer Efficiency:** 95% **Drilling Method:** Mud Rotary

Depth (ft)	Graphic	Description	Elevation (ft)	Sample Type	REC % (RQD %)	Blow Counts (N_{60})	Shear Data	Field Tests	Index Tests
0		0.0-0.5' ASPHALT (6")							
		0.5-1.5' CONCRETE (12")							
		1.5-4.0' Brown, SAND (SP), fine to medium grained, loose, trace clay	485						
5		4.0-32.0' Brown, SAND (SP), fine to coarse grained, loose to medium dense		X	78	5-5-4 (14)			MC = 10.9%
			480						
10		8.5' Sieve Analysis at 8.5 ft.: - 0.1% retained on No. 4 sieve - 2.5% passing on No. 200 sieve		X	78	5-4-5 (14)			MC = 8.4%
			475						
15		15.0' - mud rotary drilling below 15 ft.		X	83	5-3-2 (8)			MC = 9.0%
			470						
20		18.5' Sieve Analysis at 18.5 ft.: - 0.0% retained on No. 4 sieve - 1.1% passing on No. 200 sieve		X	67	3-2-4 (10)			
			465						
25				X	56	4-4-6 (16)			
			460						
30		28.5' Sieve Analysis at 28.5 ft.: - 0.3% retained on No. 4 sieve - 1.5% passing on No. 200 sieve		X	61	4-4-6 (16)			
		32.0-42.0' Brown, SAND (SP), fine to coarse grained, loose to medium dense, with gravel	455						
35				X	44	4-4-4 (13)			

$N_{60} = (Em/60)Nm$ N_{60} - Corrected N value for standard 60% SPT efficiency; Em - Measured hammer efficiency in percent; Nm - Observed N-value; (1) = Assumed, (2) = Actual

Coordinate System: **Coordinate Zone:** **Coordinate Proj. Factor:**
Coordinate Datum: **Coordinate Units:** U.S. Survey Feet

* Persons using this information are cautioned that the materials shown are determined by the equipment noted and accuracy of the "log of materials" is limited thereby and by judgement of the operator. THIS INFORMATION IS FOR DESIGN PURPOSES ONLY.

(Continued Next Page)

Missouri Department of Transportation
Construction and Materials

BORING NO. A9398-201
Page 2 of 3

Job No.: MG24029 **County:** St. Louis **Route:** Lilac Avenue
Design: **Skew:** **Location:** St. Louis County, Missouri
Bent: **Logged By:** B. Nepal **Operator:** G. Shetley
Station: **Northing:** 1068333 **Date of Work:** 06/24/24-06/27/24
Offset: **Easting:** 904947.8 **Depth to Water:**
Elevation: 487.8 **Requested Northing:** **Depth Hole Open:**
Requested Station: **Requested Easting:** **Time Change:**
Requested Offset: **Equipment:** CME 750Y ,Split-Spoon Sampler, NQ
Requested Elevation: **Location Note:**
Drill No.: UES **Hammer Efficiency:** 95% **Drilling Method:** Mud Rotary

Depth (ft)	Graphic	Description	Elevation (ft)	Sample Type	REC % (RQD %)	Blow Counts (N_{60})	Shear Data	Field Tests	Index Tests
35		32.0-42.0' Brown, SAND (SP), fine to coarse grained, loose to medium dense, with gravel *(continued)*	450						
40		38.0' - trace gravel below 38.5 38.5' Sieve Analysis at 38.5 ft.: - 0.5% retained on No. 4 sieve - 2.0% passing on No. 200 sieve		X	56	4-4-6 (16)			
		42.0-55.0' Brown, SAND (SW), fine to coarse grained, medium dense, with gravel	445						
45				X	56	4-5-5 (16)			
			440						
50		48.5' Sieve Analysis at 48.5 ft.: - 36.0% retained on No. 4 sieve - 1.0% passing on No. 200 sieve		X	56	7-6-9 (24)			
			435						
55		55.0-60.0' Grey, weathered SHALE		X	72	8-8-6 (22)			
			430						
60		60.0-84.5' Grey, SHALE, moderately weathered, soft, very finely crystalline to aphanitic		X	100	30-50/0.4'		PP = 4.50 tsf	MC = 20.3%
					94 (88)				
65		63.7' - compressive strength = 106 psi	425		94 (90)				
70			420		86 (60)				

$N_{60} = (Em/60)Nm$ N_{60} - Corrected N value for standard 60% SPT efficiency; Em - Measured hammer efficiency in percent; Nm - Observed N-value; (1) = Assumed, (2) = Actual

Coordinate System: **Coordinate Zone:** **Coordinate Proj. Factor:**
Coordinate Datum: **Coordinate Units:** U.S. Survey Feet

* Persons using this information are cautioned that the materials shown are determined by the equipment noted and accuracy of the "log of materials" is limited thereby and by judgement of the operator. THIS INFORMATION IS FOR DESIGN PURPOSES ONLY.

(Continued Next Page)

BORING DATA

Note: For location of borings, see Sheet No. 1.

Detailed August 2025
Checked August 2025

Note: This drawing is not to scale. Follow dimensions.

STATE OF MISSOURI
RYAN DAVID SHAW
NUMBER PE-2017003388
PROFESSIONAL ENGINEER
THIS SHEET HAS BEEN SIGNED, SEALED AND DATED ELECTRONICALLY

DATE PREPARED 4/1/2026
ROUTE I-270 | STATE MO
DISTRICT BR | SHEET NO. 36
COUNTY ST. LOUIS
JOB NO. J6I3020D
CONTRACT ID.
PROJECT NO.
BRIDGE NO. A9398

DESCRIPTION | DATE

MISSOURI HIGHWAYS AND TRANSPORTATION COMMISSION
105 WEST CAPITOL
JEFFERSON CITY, MO 65102
1-888-ASK-MODOT (1-888-275-6636)

HDR Engineering, Inc.
1001 Highlands Plaza Drive
Suite 200
St. Louis, MO 63110
314-425-8300
Certificate of Authority: 000856

LETTER BOREHOLE - MODOT_20151118.GDT - 12/27/24 13:14 - G:\PROJECT FILES\2024\MG24029 I-270 GAP FROM ROUTE 367 TO LILAC AVENUE\FIELD DATA\LILAC AVE\MODOT I-270 - LILAC AVE.GPJ

Missouri Department of Transportation
Construction and Materials

BORING NO. A9398-201
Page 3 of 3

Job No.: MG24029 **County:** St. Louis **Route:** Lilac Avenue
Design: **Skew:** **Location:** St. Louis County, Missouri
Bent: **Logged By:** B. Nepal **Operator:** G. Shetley
Station: **Northing:** 1068333 **Date of Work:** 06/24/24-06/27/24
Offset: **Easting:** 904947.8 **Depth to Water:**
Elevation: 487.8 **Requested Northing:** **Depth Hole Open:**
Requested Station: **Requested Easting:** **Time Change:**
Requested Offset: **Equipment:** CME 750Y ,Split-Spoon Sampler, NQ
Requested Elevation: **Location Note:**
Drill No.: UES **Hammer Efficiency:** 95% **Drilling Method:** Mud Rotary

Depth (ft)	Graphic	Description	Elevation (ft)	Sample Type	REC % (RQD %)	Blow Counts (N_{60})	Shear Data	Field Tests	Index Tests
70		60.0-84.5' Grey, SHALE, moderately weathered, soft, very finely crystalline to aphanitic *(continued)*							
		70.0' - slightly weathered and soft to moderately hard below 70 ft.	415		100 (100)				
75		70.1' - compressive strength = 4,255 psi 72.0' - compressive strength = 4,612 psi 73.0' - compressive strength = 4,378 psi 75.2' - compressive strength = 4,990 psi							
		77.0' - compressive strength = 4,771 psi	410		100 (100)				
80		78.2' - compressive strength = 4,524 psi							
		81.6' - compressive strength = 4,073 psi	405		97 (70)				
85		84.5-85.5' Black, COAL, soft, brittle							
		85.5-90.0' Grey, SHALE, moderately weathered, soft, very finely crystalline to aphanitic	400		100 (78)				
90		86.6' - compressive strength = 648 psi 87.2' - compressive strength = 56 psi 88.0' - compressive strength = 139 psi 88.9' - compressive strength = 2,666 psi							
		Refusal at 59.4 feet. Bottom of borehole at 90.0 feet.							

N_{60} = (Em/60)Nm N_{60} - Corrected N value for standard 60% SPT efficiency; Em - Measured hammer efficiency in percent; Nm - Observed N-value; (1) = Assumed, (2) = Actual

Coordinate System: **Coordinate Zone:** **Coordinate Proj. Factor:**
Coordinate Datum: **Coordinate Units:** U.S. Survey Feet

* Persons using this information are cautioned that the materials shown are determined by the equipment noted and accuracy of the "log of materials" is limited thereby and by judgement of the operator. THIS INFORMATION IS FOR DESIGN PURPOSES ONLY.

LETTER BOREHOLE - MODOT_20151118.GDT - 12/27/24 13:14 - G:\PROJECT FILES\2024\MG24029 I-270 GAP FROM ROUTE 367 TO LILAC AVENUE\FIELD DATA\LILAC AVE\MODOT I-270 - LILAC AVE.GPJ

Missouri Department of Transportation
Construction and Materials

BORING NO. A9398-202
Page 1 of 3

Job No.: MG24029 **County:** St. Louis **Route:** Lilac Avenue
Design: **Skew:** **Location:** St. Louis County, Missouri
Bent: **Logged By:** B. Nepal **Operator:** R. Rose
Station: **Northing:** 1068350 **Date of Work:** 07/10/24-07/12/24
Offset: **Easting:** 904861.7 **Depth to Water:**
Elevation: 488.3 **Requested Northing:** **Depth Hole Open:**
Requested Station: **Requested Easting:** **Time Change:**
Requested Offset: **Equipment:** CME 55LC ,Split-Spoon Sampler, NQ
Requested Elevation: **Location Note:**
Drill No.: UES **Hammer Efficiency:** 79% **Drilling Method:** Mud Rotary

Depth (ft)	Graphic	Description	Elevation (ft)	Sample Type	REC % (RQD %)	Blow Counts (N_{60})	Shear Data	Field Tests	Index Tests
0		0.0-1.0' FILL : Brown, lean clay with gravel							
		1.0-6.0' Brown, sandy lean CLAY (CL)	485						
5					100	2-1-2 (4)		PP = 0.75 tsf	MC = 17.9%
		6.0-22.0' Brown, SAND (SP), fine to medium grained, medium dense	480						
10					78	2-4-5 (12)			MC = 12.9%
			475						
15		15.0' - mud rotary drilling below 15 ft.			100	4-4-6 (13)			MC = 14.1%
			470						
20					78	5-5-6 (14)			
		22.0-42.0' Brown, SAND (SP), fine to medium grained, loose to medium dense, trace gravel	465						
25					72	5-6-5 (14)			
			460						
30					72	6-5-6 (14)			
			455						
35		33.5' Sieve Analysis at 33.5 ft.: - 1.2% retained on No. 4 sieve			100	3-3-4 (9)			

N_{60} = (Em/60)Nm N_{60} - Corrected N value for standard 60% SPT efficiency; Em - Measured hammer efficiency in percent; Nm - Observed N-value; (1) = Assumed, (2) = Actual

Coordinate System: **Coordinate Zone:** **Coordinate Proj. Factor:**
Coordinate Datum: **Coordinate Units:** U.S. Survey Feet

* Persons using this information are cautioned that the materials shown are determined by the equipment noted and accuracy of the "log of materials" is limited thereby and by judgement of the operator. THIS INFORMATION IS FOR DESIGN PURPOSES ONLY.

LETTER BOREHOLE - MODOT_20151118.GDT - 12/27/24 13:14 - G:\PROJECT FILES\2024\MG24029 I-270 GAP FROM ROUTE 367 TO LILAC AVENUE\FIELD DATA\LILAC AVE\MODOT I-270 - LILAC AVE.GPJ

(Continued Next Page)

STATE OF MISSOURI
RYAN DAVID SHAW
NUMBER PE-2017003388
PROFESSIONAL ENGINEER
THIS SHEET HAS BEEN SIGNED, SEALED AND DATED ELECTRONICALLY

DATE PREPARED 4/1/2026
ROUTE I-270 | STATE MO
DISTRICT BR | SHEET NO. 37
COUNTY ST. LOUIS
JOB NO. J6I3020D
CONTRACT ID.
PROJECT NO.
BRIDGE NO. A9398

DESCRIPTION | DATE

MISSOURI HIGHWAYS AND TRANSPORTATION COMMISSION
105 WEST CAPITOL
JEFFERSON CITY, MO 65102
1-888-ASK-MODOT (1-888-275-6636)

HDR Engineering, Inc.
1001 Highlands Plaza Drive
Suite 200
St. Louis, MO 63110
314-425-8300
Certificate of Authority: 000856

BORING DATA

Note: For location of borings, see Sheet No. 1.

Detailed August 2025
Checked August 2025

Note: This drawing is not to scale. Follow dimensions.

c:\pwworking\central01\d4954830\B_A9398_037_J6I3020D.dgn 2:39:51 PM 4/1/2026

Missouri Department of Transportation
Construction and Materials

BORING NO. A9398-202
Page 2 of 3

Job No.: MG24029 **County:** St. Louis **Route:** Lilac Avenue
Design: **Skew:** **Location:** St. Louis County, Missouri
Bent: **Logged By:** B. Nepal **Operator:** R. Rose
Station: **Northing:** 1068350 **Date of Work:** 07/10/24-07/12/24
Offset: **Easting:** 904861.7 **Depth to Water:**
Elevation: 488.3 **Requested Northing:** **Depth Hole Open:**
Requested Station: **Requested Easting:** **Time Change:**
Requested Offset: **Equipment:** CME 55LC ,Split-Spoon Sampler, NQ
Requested Elevation: **Location Note:**
Drill No.: UES **Hammer Efficiency:** 79% **Drilling Method:** Mud Rotary

Depth (ft)	Graphic	Description	Elevation (ft)	Sample Type	REC % (RQD %)	Blow Counts (N_{60})	Shear Data	Field Tests	Index Tests
35		- 1.8% passing on No. 200 sieve 22.0-42.0' Brown, SAND (SP), fine to medium grained, loose to medium dense, trace gravel *(continued)* 36.0' - trace gravel below 36 ft. 38.5' Sieve Analysis at 38.5 ft.: - 5.6% retained on No. 4 sieve - 4.1% passing on No. 200 sieve	450						
40				X	67	5-5-6 (14)			
		42.0-56.0' Brown, SAND (SW), fine to coarse grained, medium dense, with gravel 43.5' Sieve Analysis at 43.5 ft.: - 19.7% retained on No. 4 sieve - 9.5% passing on No. 200 sieve	445						
45				X	56	6-5-4 (12)			
			440						
50				X	33	7-6-7 (17)			
		53.5' Sieve Analysis at 53.5 ft.: - 26.4% retained on No. 4 sieve - 7.3% passing on No. 200 sieve	435						
55				X	17	5-7-7 (18)			
		56.0-58.0' Greyish brown, SHALE							
		58.0-88.0' Grey, SHALE, moderately to highly weathered, soft, very finely crystalline to aphanitic	430		100 22 (0)	50/0.3"			
60									
			425		0 (0)				
65									
			420		7 (0)				
70									

N_{60} = (Em/60)Nm N_{60} - Corrected N value for standard 60% SPT efficiency; Em - Measured hammer efficiency in percent; Nm - Observed N-value; (1) = Assumed, (2) = Actual

Coordinate System: **Coordinate Zone:** **Coordinate Proj. Factor:**
Coordinate Datum: **Coordinate Units:** U.S. Survey Feet

* Persons using this information are cautioned that the materials shown are determined by the equipment noted and accuracy of the "log of materials" is limited thereby and by judgement of the operator. THIS INFORMATION IS FOR DESIGN PURPOSES ONLY.

(Continued Next Page)

Missouri Department of Transportation
Construction and Materials

BORING NO. A9398-202
Page 3 of 3

Job No.: MG24029 **County:** St. Louis **Route:** Lilac Avenue
Design: **Skew:** **Location:** St. Louis County, Missouri
Bent: **Logged By:** B. Nepal **Operator:** R. Rose
Station: **Northing:** 1068350 **Date of Work:** 07/10/24-07/12/24
Offset: **Easting:** 904861.7 **Depth to Water:**
Elevation: 488.3 **Requested Northing:** **Depth Hole Open:**
Requested Station: **Requested Easting:** **Time Change:**
Requested Offset: **Equipment:** CME 55LC ,Split-Spoon Sampler, NQ
Requested Elevation: **Location Note:**
Drill No.: UES **Hammer Efficiency:** 79% **Drilling Method:** Mud Rotary

Depth (ft)	Graphic	Description	Elevation (ft)	Sample Type	REC % (RQD %)	Blow Counts (N_{60})	Shear Data	Field Tests	Index Tests
70		58.0-88.0' Grey, SHALE, moderately to highly weathered, soft, very finely crystalline to aphanitic *(continued)*	415		75 (7)				
75		75.1' - compressive strength = 3,742 psi 76.4' - compressive strength = 4,136 psi	410		100 (94)				
80		78.6' - compressive strength = 5,016 psi 80.0' - compressive strength = 3,934 psi 81.1' - compressive strength = 5,077 psi	405		100 (97)				
85		83.4' - compressive strength = 4,431 psi 85.3' - compressive strength = 2,962 psi 86.6' - compressive strength = 2,932 psi			100 (100)				
		Refusal at 58.0 feet. Bottom of borehole at 88.0 feet.							

N_{60} = (Em/60)Nm N_{60} - Corrected N value for standard 60% SPT efficiency; Em - Measured hammer efficiency in percent; Nm - Observed N-value; (1) = Assumed, (2) = Actual

Coordinate System: **Coordinate Zone:** **Coordinate Proj. Factor:**
Coordinate Datum: **Coordinate Units:** U.S. Survey Feet

* Persons using this information are cautioned that the materials shown are determined by the equipment noted and accuracy of the "log of materials" is limited thereby and by judgement of the operator. THIS INFORMATION IS FOR DESIGN PURPOSES ONLY.

STATE OF MISSOURI
RYAN DAVID SHAW
NUMBER PE-2017003388
PROFESSIONAL ENGINEER
THIS SHEET HAS BEEN SIGNED, SEALED AND DATED ELECTRONICALLY

DATE PREPARED 4/1/2026
ROUTE I-270 | STATE MO
DISTRICT BR | SHEET NO. 38
COUNTY ST. LOUIS
JOB NO. J6I3020D
CONTRACT ID.
PROJECT NO.
BRIDGE NO. A9398

DESCRIPTION | DATE

MISSOURI HIGHWAYS AND TRANSPORTATION COMMISSION
105 WEST CAPITOL
JEFFERSON CITY, MO 65102
1-888-ASK-MODOT (1-888-275-6636)

HDR Engineering, Inc.
1001 Highlands Plaza Drive
Suite 200
St. Louis, MO 63110
314-425-8300
Certificate of Authority: 000856

BORING DATA

Note: For location of borings, see Sheet No. 1.

Detailed August 2025
Checked August 2025

Note: This drawing is not to scale. Follow dimensions.

LETTER BOREHOLE - MODOT_20151118.GDT - 12/27/24 13:14 - G:\PROJECT FILES\2024\MG24029 I-270 GAP FROM ROUTE 367 TO LILAC AVENUE\FIELD DATA\LILAC AVE\MODOT I-270 - LILAC AVE.GPJ

c:\pwworking\central01\d4954830\B_A9398_038_J6I3020D.dgn 2:40:23 PM 4/1/2026

Missouri Department of Transportation
Construction and Materials

BORING NO. A9398-202A
Page 1 of 3

Job No.: MG24029 **County:** St. Louis **Route:** Lilac Avenue
Design: **Skew:** **Location:** St. Louis County, Missouri
Bent: **Logged By:** B. Nepal **Operator:** S. Conrad
Station: **Northing:** 1068350 **Date of Work:** 07/17/24-07/19/24
Offset: **Easting:** 904861.7 **Depth to Water:**
Elevation: 488.3 **Requested Northing:** **Depth Hole Open:**
Requested Station: **Requested Easting:** **Time Change:**
Requested Offset: **Equipment:** CME 55LC ,NQ
Requested Elevation: **Location Note:**
Drill No.: UES **Hammer Efficiency:** 79% **Drilling Method:** Mud Rotary

Depth (ft)	Graphic	Description	Elevation (ft)	Sample Type	REC % (RQD %)	Blow Counts (N_{60})	Shear Data	Field Tests	Index Tests
0		0.0-1.0' FILL: Brown Lean Clay (CL)							
		1.0-62.0' No sampling until top of rock	485						
5									
			480						
10									
			475						
15		15.0' - mud rotary drilling below 15 ft.							
			470						
20									
			465						
25									
			460						
30									

N_{60} = (Em/60)Nm N_{60} - Corrected N value for standard 60% SPT efficiency; Em - Measured hammer efficiency in percent; Nm - Observed N-value; (1) = Assumed, (2) = Actual

Coordinate System: **Coordinate Zone:** **Coordinate Proj. Factor:**
Coordinate Datum: **Coordinate Units:** U.S. Survey Feet

* Persons using this information are cautioned that the materials shown are determined by the equipment noted and accuracy of the "log of materials" is limited thereby and by judgement of the operator. THIS INFORMATION IS FOR DESIGN PURPOSES ONLY.

(Continued Next Page)

LETTER BOREHOLE - MODOT_20151118.GDT - 12/27/24 13:14 - G:\PROJECT FILES\2024\MG24029 I-270 GAP FROM ROUTE 367 TO LILAC AVENUE\FIELD DATA\LILAC AVE\MODOT I-270 - LILAC AVE.GPJ

Missouri Department of Transportation
Construction and Materials

BORING NO. A9398-202A
Page 2 of 3

Job No.: MG24029 **County:** St. Louis **Route:** Lilac Avenue
Design: **Skew:** **Location:** St. Louis County, Missouri
Bent: **Logged By:** B. Nepal **Operator:** S. Conrad
Station: **Northing:** 1068350 **Date of Work:** 07/17/24-07/19/24
Offset: **Easting:** 904861.7 **Depth to Water:**
Elevation: 488.3 **Requested Northing:** **Depth Hole Open:**
Requested Station: **Requested Easting:** **Time Change:**
Requested Offset: **Equipment:** CME 55LC ,NQ
Requested Elevation: **Location Note:**
Drill No.: UES **Hammer Efficiency:** 79% **Drilling Method:** Mud Rotary

Depth (ft)	Graphic	Description	Elevation (ft)	Sample Type	REC % (RQD %)	Blow Counts (N_{60})	Shear Data	Field Tests	Index Tests
30		1.0-62.0' No sampling until top of rock *(continued)*							
			455						
35									
			450						
40									
			445						
45									
			440						
50									
			435						
55		55.0' - stiff drilling below 55 ft.							
			430						
60									

N_{60} = (Em/60)Nm N_{60} - Corrected N value for standard 60% SPT efficiency; Em - Measured hammer efficiency in percent; Nm - Observed N-value; (1) = Assumed, (2) = Actual

Coordinate System: **Coordinate Zone:** **Coordinate Proj. Factor:**
Coordinate Datum: **Coordinate Units:** U.S. Survey Feet

* Persons using this information are cautioned that the materials shown are determined by the equipment noted and accuracy of the "log of materials" is limited thereby and by judgement of the operator. THIS INFORMATION IS FOR DESIGN PURPOSES ONLY.

(Continued Next Page)

LETTER BOREHOLE - MODOT_20151118.GDT - 12/27/24 13:14 - G:\PROJECT FILES\2024\MG24029 I-270 GAP FROM ROUTE 367 TO LILAC AVENUE\FIELD DATA\LILAC AVE\MODOT I-270 - LILAC AVE.GPJ

STATE OF MISSOURI
RYAN DAVID SHAW
NUMBER PE-2017003388
PROFESSIONAL ENGINEER
THIS SHEET HAS BEEN SIGNED, SEALED AND DATED ELECTRONICALLY

DATE PREPARED 4/1/2026
ROUTE I-270 | STATE MO
DISTRICT BR | SHEET NO. 39
COUNTY ST. LOUIS
JOB NO. J6I3020D
CONTRACT ID.
PROJECT NO.
BRIDGE NO. A9398

DESCRIPTION | DATE

MISSOURI HIGHWAYS AND TRANSPORTATION COMMISSION
105 WEST CAPITOL
JEFFERSON CITY, MO 65102
1-888-ASK-MODOT (1-888-275-6636)

HDR Engineering, Inc.
1001 Highlands Plaza Drive
Suite 200
St. Louis, MO 63110
314-425-8300
Certificate of Authority: 000856

BORING DATA

Note: For location of borings, see Sheet No. 1.

Detailed August 2025
Checked August 2025

Note: This drawing is not to scale. Follow dimensions.

c:\pwworking\central01\d4954830\B_A9398_039_J6I3020D.dgn 2:40:58 PM 4/1/2026

Missouri Department of Transportation
Construction and Materials

BORING NO. A9398-202A
Page 3 of 3

Job No.: MG24029 **County:** St. Louis **Route:** Lilac Avenue
Design: **Skew:** **Location:** St. Louis County, Missouri
Bent: **Logged By:** B. Nepal **Operator:** S. Conrad
Station: **Northing:** 1068350 **Date of Work:** 07/17/24-07/19/24
Offset: **Easting:** 904861.7 **Depth to Water:**
Elevation: 488.3 **Requested Northing:** **Depth Hole Open:**
Requested Station: **Requested Easting:** **Time Change:**
Requested Offset: **Equipment:** CME 55LC ,NQ
Requested Elevation: **Location Note:**
Drill No.: UES **Hammer Efficiency:** 79% **Drilling Method:** Mud Rotary

Depth (ft)	Graphic	Description	Elevation (ft)	Sample Type	REC % (RQD %)	Blow Counts (N_{60})	Shear Data	Field Tests	Index Tests
60		1.0-62.0' No sampling until top of rock *(continued)* 60.0' - casing advanced to 60 ft. 61.9' - sand and gravel washed out to 62 ft.			0 (0)				
		62.0-77.0' Grey, SHALE, moderately to highly weathered, soft, slightly fractured	425						
65		63.0' - core loss from 63.0 to 64.0 ft. 64.5' - core loss from 64.5 to 66.0 ft.			48 (30)				
		66.8' - compressive strength = 225 psi 67.5' - vertical fracture from 67.5 to 68.0 ft.	420						
70		68.4' - compressive strength = 146 psi			98 (92)				
		70.5' - compressive strength = 241 psi 71.3' - compressive strength = 294 psi 72.0' - compressive strength = 281 psi							
		73.3' - compressive strength = 279 psi	415						
75		74.0' - core loss from 74.0 to 76.0 ft.			46 (38)				
		Refusal at 60.0 feet. Bottom of borehole at 77.0 feet.							

$N_{60} = (Em/60)Nm$ N_{60} - Corrected N value for standard 60% SPT efficiency; Em - Measured hammer efficiency in percent; Nm - Observed N-value; (1) = Assumed, (2) = Actual

Coordinate System: **Coordinate Zone:** **Coordinate Proj. Factor:**
Coordinate Datum: **Coordinate Units:** U.S. Survey Feet

* Persons using this information are cautioned that the materials shown are determined by the equipment noted and accuracy of the "log of materials" is limited thereby and by judgement of the operator. THIS INFORMATION IS FOR DESIGN PURPOSES ONLY.

LETTER BOREHOLE - MODOT_20151118.GDT - 12/27/24 13:14 - G:\PROJECT FILES\2024\MG24029 I-270 GAP FROM ROUTE 367 TO LILAC AVENUE\FIELD DATA\LILAC AVE\MODOT I-270 - LILAC AVE.GPJ

Missouri Department of Transportation
Construction and Materials

BORING NO. A9398-301/A9498-2
Page 1 of 3

Job No.: MG24029 **County:** St. Louis **Route:** Lilac Avenue
Design: **Skew:** **Location:** St. Louis County, Missouri
Bent: **Logged By:** B. Nepal **Operator:** G. Shetley
Station: **Northing:** 1068296 **Date of Work:** 06/17/24-06/19/24
Offset: **Easting:** 904948.1 **Depth to Water:**
Elevation: 488.9 **Requested Northing:** **Depth Hole Open:**
Requested Station: **Requested Easting:** **Time Change:**
Requested Offset: **Equipment:** CME 750Y ,Split-Spoon Sampler, Shelby Tube, NQ
Requested Elevation: **Location Note:**
Drill No.: UES **Hammer Efficiency:** 95% **Drilling Method:** Mud Rotary

Depth (ft)	Graphic	Description	Elevation (ft)	Sample Type	REC % (RQD %)	Blow Counts (N_{60})	Shear Data	Field Tests	Index Tests
0		0.0-0.5' TOPSOIL (6")							
		0.5-22.0' Brown, SAND (SP), fine to medium grained, loose to medium dense	485		92				
5									
			480		78	4-4-3 (11)			MC = 8.6%
10									
			475		100				
15		15.0' - mud rotary drilling below 15 ft.							
		18.5' Sieve Analysis at 18.5 ft.: - 0.5% retained on No. 4 sieve - 3.0% passing on No. 200 sieve	470		78	4-4-4 (13)			
20		22.0-42.0' Brown, SAND (SP), fine to coarse grained, loose to medium dense, trace gravel							
			465		61	4-6-7 (21)			
25									
		28.5' Sieve Analysis at 28.5 ft.: - 2.1% retained on No. 4 sieve	460		50	4-5-5 (16)			
30									

$N_{60} = (Em/60)Nm$ N_{60} - Corrected N value for standard 60% SPT efficiency; Em - Measured hammer efficiency in percent; Nm - Observed N-value; (1) = Assumed, (2) = Actual

Coordinate System: **Coordinate Zone:** **Coordinate Proj. Factor:**
Coordinate Datum: **Coordinate Units:** U.S. Survey Feet

* Persons using this information are cautioned that the materials shown are determined by the equipment noted and accuracy of the "log of materials" is limited thereby and by judgement of the operator. THIS INFORMATION IS FOR DESIGN PURPOSES ONLY.

LETTER BOREHOLE - MODOT_20151118.GDT - 12/27/24 13:14 - G:\PROJECT FILES\2024\MG24029 I-270 GAP FROM ROUTE 367 TO LILAC AVENUE\FIELD DATA\LILAC AVE\MODOT I-270 - LILAC AVE.GPJ

(Continued Next Page)

STATE OF MISSOURI
RYAN DAVID SHAW
NUMBER PE-2011000388
PROFESSIONAL ENGINEER
THIS SHEET HAS BEEN SIGNED, SEALED AND DATED ELECTRONICALLY

DATE PREPARED 4/1/2026
ROUTE I-270 | STATE MO
DISTRICT BR | SHEET NO. 40
COUNTY ST. LOUIS
JOB NO. J6I3020D
CONTRACT ID.
PROJECT NO.
BRIDGE NO. A9398

DESCRIPTION | DATE

MISSOURI HIGHWAYS AND TRANSPORTATION COMMISSION
105 WEST CAPITOL
JEFFERSON CITY, MO 65102
1-888-ASK-MODOT (1-888-275-6636)

HDR Engineering, Inc.
1001 Highlands Plaza Drive
Suite 200
St. Louis, MO 63110
314-425-8300
Certificate of Authority: 000856

BORING DATA

Note: For location of borings, see Sheet No. 1.

Detailed August 2025
Checked August 2025

Note: This drawing is not to scale. Follow dimensions.

c:\pwworking\central01\d4954830\B_A9398_040_J6I3020D.dgn 2:41:30 PM 4/1/2026

Missouri Department of Transportation
Construction and Materials

BORING NO. A9398-301/A9498-2
Page 2 of 3

Job No.: MG24029 **County:** St. Louis **Route:** Lilac Avenue
Design: **Skew:** **Location:** St. Louis County, Missouri
Bent: **Logged By:** B. Nepal **Operator:** G. Shetley
Station: **Northing:** 1068296 **Date of Work:** 06/17/24-06/19/24
Offset: **Easting:** 904948.1 **Depth to Water:**
Elevation: 488.9 **Requested Northing:** **Depth Hole Open:**
Requested Station: **Requested Easting:** **Time Change:**
Requested Offset: **Equipment:** CME 750Y ,Split-Spoon Sampler, Shelby Tube, NQ
Requested Elevation: **Location Note:**
Drill No.: UES **Hammer Efficiency:** 95% **Drilling Method:** Mud Rotary

Depth (ft)	Graphic	Description	Elevation (ft)	Sample Type	REC % (RQD %)	Blow Counts (N_{60})	Shear Data	Field Tests	Index Tests
30		- 4.3% passing on No. 200 sieve 22.0-42.0' Brown, SAND (SP), fine to coarse grained, loose to medium dense, trace gravel *(continued)*							
			455		61	3-3-3 (10)			
35									
			450		56	6-6-6 (19)			
40		38.5' Sieve Analysis at 38.5 ft.: - 1.9% retained on No. 4 sieve - 2.8% passing on No. 200 sieve							
		42.0-57.0' Brown, SAND (SW), fine to coarse grained, medium dense, trace gravel	445		50	5-5-6 (17)			
45									
			440		50	5-4-4 (13)			
50		48.5' Sieve Analysis at 48.5 ft.: - 21.7% retained on No. 4 sieve - 7.5% passing on No. 200 sieve							
			435		33	9-8-7 (24)			
55									
		57.0-66.0' Brown and grey, weathered SHALE	430		72	5-6-11 (27)		PP = 4.50 tsf	MC = 23.9%
60									

N_{60} = (Em/60)Nm N_{60} - Corrected N value for standard 60% SPT efficiency; Em - Measured hammer efficiency in percent; Nm - Observed N-value; (1) = Assumed, (2) = Actual

Coordinate System: **Coordinate Zone:** **Coordinate Proj. Factor:**
Coordinate Datum: **Coordinate Units:** U.S. Survey Feet

* Persons using this information are cautioned that the materials shown are determined by the equipment noted and accuracy of the "log of materials" is limited thereby and by judgement of the operator. THIS INFORMATION IS FOR DESIGN PURPOSES ONLY.

(Continued Next Page)

LETTER BOREHOLE - MODOT_20151118.GDT - 12/27/24 13:14 - G:\PROJECT FILES\2024\MG24029 I-270 GAP FROM ROUTE 367 TO LILAC AVENUE\FIELD DATA\LILAC AVE\MODOT I-270 - LILAC AVE.GPJ

Missouri Department of Transportation
Construction and Materials

BORING NO. A9398-301/A9498-2
Page 3 of 3

Job No.: MG24029 **County:** St. Louis **Route:** Lilac Avenue
Design: **Skew:** **Location:** St. Louis County, Missouri
Bent: **Logged By:** B. Nepal **Operator:** G. Shetley
Station: **Northing:** 1068296 **Date of Work:** 06/17/24-06/19/24
Offset: **Easting:** 904948.1 **Depth to Water:**
Elevation: 488.9 **Requested Northing:** **Depth Hole Open:**
Requested Station: **Requested Easting:** **Time Change:**
Requested Offset: **Equipment:** CME 750Y ,Split-Spoon Sampler, Shelby Tube, NQ
Requested Elevation: **Location Note:**
Drill No.: UES **Hammer Efficiency:** 95% **Drilling Method:** Mud Rotary

Depth (ft)	Graphic	Description	Elevation (ft)	Sample Type	REC % (RQD %)	Blow Counts (N_{60})	Shear Data	Field Tests	Index Tests
60		57.0-66.0' Brown and grey, weathered SHALE *(continued)*			100	36-50/0.3'		PP = 4.50 tsf	MC = 19.1%
		62.3' - compressive strength = 22 psi	425						
65					75	28-50/0.2'		PP = 4.00 tsf	MC = 20.8%
		66.0-76.0' Grey, SHALE, moderately weathered, soft, very finely crystalline, moderately fractured			100 (75)				
70			420						
					98 (98)				
			415		100 (100)				
75		Refusal at 66.0 feet. Bottom of borehole at 76.0 feet.							

N_{60} = (Em/60)Nm N_{60} - Corrected N value for standard 60% SPT efficiency; Em - Measured hammer efficiency in percent; Nm - Observed N-value; (1) = Assumed, (2) = Actual

Coordinate System: **Coordinate Zone:** **Coordinate Proj. Factor:**
Coordinate Datum: **Coordinate Units:** U.S. Survey Feet

* Persons using this information are cautioned that the materials shown are determined by the equipment noted and accuracy of the "log of materials" is limited thereby and by judgement of the operator. THIS INFORMATION IS FOR DESIGN PURPOSES ONLY.

LETTER BOREHOLE - MODOT_20151118.GDT - 12/27/24 13:14 - G:\PROJECT FILES\2024\MG24029 I-270 GAP FROM ROUTE 367 TO LILAC AVENUE\FIELD DATA\LILAC AVE\MODOT I-270 - LILAC AVE.GPJ

STATE OF MISSOURI
RYAN DAVID SHAW
NUMBER PE-2017003388
PROFESSIONAL ENGINEER
THIS SHEET HAS BEEN SIGNED, SEALED AND DATED ELECTRONICALLY

DATE PREPARED 4/1/2026
ROUTE I-270 | STATE MO
DISTRICT BR | SHEET NO. 41
COUNTY ST. LOUIS
JOB NO. J6I3020D
CONTRACT ID.
PROJECT NO.
BRIDGE NO. A9398

DESCRIPTION | DATE

MISSOURI HIGHWAYS AND TRANSPORTATION COMMISSION
105 WEST CAPITOL
JEFFERSON CITY, MO 65102
1-888-ASK-MODOT (1-888-275-6636)

HDR Engineering, Inc.
1001 Highlands Plaza Drive
Suite 200
St. Louis, MO 63110
314-425-8300
Certificate of Authority: 000856

BORING DATA

Note: For location of borings, see Sheet No. 1.

Detailed August 2025
Checked August 2025

Note: This drawing is not to scale. Follow dimensions.

c:\pwworking\central01\d4954830\B_A9398_041_J6I3020D.dgn 2:42:01 PM 4/1/2026

Missouri Department of Transportation
Construction and Materials

BORING NO. A9398-302/A9498-4
Page 1 of 3

Job No.: MG24029 **County:** St. Louis **Route:** Lilac Avenue
Design: **Skew:** **Location:** St. Louis County, Missouri
Bent: **Logged By:** B. Nepal **Operator:** G. Shetley
Station: **Northing:** 1068289 **Date of Work:** 06/19/24-06/21/24
Offset: **Easting:** 904845.4 **Depth to Water:**
Elevation: 489.8 **Requested Northing:** **Depth Hole Open:**
Requested Station: **Requested Easting:** **Time Change:**
Requested Offset: **Equipment:** CME 750Y ,Split-Spoon Sampler, Shelby Tube, NQ
Requested Elevation: **Location Note:**
Drill No.: UES **Hammer Efficiency:** 95% **Drilling Method:** Mud Rotary

Depth (ft)	Graphic	Description	Elevation (ft)	Sample Type	REC % (RQD %)	Blow Counts (N_{60})	Shear Data	Field Tests	Index Tests
0		0.0-0.5' TOPSOIL (6")							
		0.5-8.0' FILL: Brown, lean CLAY (CL), trace gravel			63			PP = 4.50 tsf	MC = 14.7%
					79		Qu Test Results UCS = 3.52 ksf MC = 20.3% γ_{moist} = 129.4428 pcf	PP = 3.50 tsf	MC = 20.3%
5		4.0' - UU Test performed at 4.0 ft.: shear strength = 0.98 tsf dry density = 100.7 pcf	485		83			PP = 2.00 tsf	MC = 22.2%
		6.0' - UU Test performed at 6.0 ft.: dry density = 101.9 pcf			88			PP = 1.25 tsf	LL = 32 PL = 19 MC = 22.6%
		8.0-12.0' Brown, lean CLAY (CL), with sand			92			PP = 0.50 tsf	MC = 18.6%
10		8.1' - UU Test performed at 8.0 ft.: shear strength = 0.53 tsf dry density = 107.5 pcf	480		100		Qu Test Results UCS = 1.64 ksf MC = 16.2% γ_{moist} = 135.954 pcf	PP = 1.00 tsf	LL = 38 PL = 14 MC = 16.2%
		12.0-47.0' Brown, SAND (SP), fine to medium grained, medium dense, trace gravel			96				
15			475	X	94	6-3-4 (11)			MC = 13.9%
		17.0' - 1.5% passing No. 200 sieve		X	94	4-4-4 (13)			MC = 8.8%
20			470	X	100	4-3-5 (13)			MC = 6.8%
		20.0' - mud rotary drilling below 20 ft.							
25			465	X	89	4-7-8 (24)			
30		29.0' - 3.1% passing No. 200 sieve	460	X	67	3-6-6 (19)			

N_{60} = (Em/60)Nm N_{60} - Corrected N value for standard 60% SPT efficiency; Em - Measured hammer efficiency in percent; Nm - Observed N-value; (1) = Assumed, (2) = Actual

Coordinate System: **Coordinate Zone:** **Coordinate Proj. Factor:**
Coordinate Datum: **Coordinate Units:** U.S. Survey Feet

* Persons using this information are cautioned that the materials shown are determined by the equipment noted and accuracy of the "log of materials" is limited thereby and by judgement of the operator. THIS INFORMATION IS FOR DESIGN PURPOSES ONLY.

(Continued Next Page)

Missouri Department of Transportation
Construction and Materials

BORING NO. A9398-302/A9498-4
Page 2 of 3

Job No.: MG24029 **County:** St. Louis **Route:** Lilac Avenue
Design: **Skew:** **Location:** St. Louis County, Missouri
Bent: **Logged By:** B. Nepal **Operator:** G. Shetley
Station: **Northing:** 1068289 **Date of Work:** 06/19/24-06/21/24
Offset: **Easting:** 904845.4 **Depth to Water:**
Elevation: 489.8 **Requested Northing:** **Depth Hole Open:**
Requested Station: **Requested Easting:** **Time Change:**
Requested Offset: **Equipment:** CME 750Y ,Split-Spoon Sampler, Shelby Tube, NQ
Requested Elevation: **Location Note:**
Drill No.: UES **Hammer Efficiency:** 95% **Drilling Method:** Mud Rotary

Depth (ft)	Graphic	Description	Elevation (ft)	Sample Type	REC % (RQD %)	Blow Counts (N_{60})	Shear Data	Field Tests	Index Tests
30		12.0-47.0' Brown, SAND (SP), fine to medium grained, medium dense, trace gravel *(continued)*							
35			455	X	72	3-5-3 (13)			
40		39.0' - 1.4% passing No. 200 sieve	450	X	83	2-3-4 (11)			
45			445	X	56	4-4-7 (17)			
		47.0-57.0' Brown, SAND (SW), fine to coarse grained, loose, with gravel							
50			440	X	67	6-4-5 (14)			
		52.0' - with sandstone fragments below 52 ft.							
55			435	X	33	6-4-5 (14)			
		57.0-64.5' Grey, clayey SHALE							
60			430	X	50	4-3-3 (10)			MC = 17.0%

N_{60} = (Em/60)Nm N_{60} - Corrected N value for standard 60% SPT efficiency; Em - Measured hammer efficiency in percent; Nm - Observed N-value; (1) = Assumed, (2) = Actual

Coordinate System: **Coordinate Zone:** **Coordinate Proj. Factor:**
Coordinate Datum: **Coordinate Units:** U.S. Survey Feet

* Persons using this information are cautioned that the materials shown are determined by the equipment noted and accuracy of the "log of materials" is limited thereby and by judgement of the operator. THIS INFORMATION IS FOR DESIGN PURPOSES ONLY.

(Continued Next Page)

BORING DATA

Note: For location of borings, see Sheet No. 1.

Detailed August 2025
Checked August 2025

Note: This drawing is not to scale. Follow dimensions.

Sheet No. 42 of 43

RYAN DAVID SHAW NUMBER PE-2017003388 STATE OF MISSOURI PROFESSIONAL ENGINEER
THIS SHEET HAS BEEN SIGNED, SEALED AND DATED ELECTRONICALLY

DATE PREPARED 4/1/2026
ROUTE I-270 STATE MO
DISTRICT BR SHEET NO. 42
COUNTY ST. LOUIS
JOB NO. J6I3020D
CONTRACT ID.
PROJECT NO.
BRIDGE NO. A9398

DESCRIPTION | DATE

MISSOURI HIGHWAYS AND TRANSPORTATION COMMISSION
105 WEST CAPITOL
JEFFERSON CITY, MO 65102
1-888-ASK-MODOT (1-888-275-6636)

HDR Engineering, Inc.
1001 Highlands Plaza Drive
Suite 200
St. Louis, MO 63110
314-425-8300
Certificate of Authority: 000856

LETTER BOREHOLE - MODOT_20151118.GDT - 12/27/24 13:14 - G:\PROJECT FILES\2024\MG24029 I-270 GAP FROM ROUTE 367 TO LILAC AVENUE\FIELD DATA\LILAC AVE\MODOT I-270 - LILAC AVE.GPJ

c:\pwworking\central01\d4954830\B_A9398_042_J6I3020D.dgn 2:42:32 PM 4/1/2026

Missouri Department of Transportation
Construction and Materials

BORING NO. A9398-302/A9498-4
Page 3 of 3

Job No.: MG24029 **County:** St. Louis **Route:** Lilac Avenue
Design: **Skew:** **Location:** St. Louis County, Missouri
Bent: **Logged By:** B. Nepal **Operator:** G. Shetley
Station: **Northing:** 1068289 **Date of Work:** 06/19/24-06/21/24
Offset: **Easting:** 904845.4 **Depth to Water:**
Elevation: 489.8 **Requested Northing:** **Depth Hole Open:**
Requested Station: **Requested Easting:** **Time Change:**
Requested Offset: **Equipment:** CME 750Y ,Split-Spoon Sampler, Shelby Tube, NQ
Requested Elevation: **Location Note:**
Drill No.: UES **Hammer Efficiency:** 95% **Drilling Method:** Mud Rotary

Depth (ft)	Graphic	Description	Elevation (ft)	Sample Type	REC % (RQD %)	Blow Counts (N_{60})	Shear Data	Field Tests	Index Tests
60		57.0-64.5' Grey, clayey SHALE *(continued)*							
					100	23-50/0.5'			MC = 17.6%
65		64.5-74.5' Grey, SHALE, moderately to highly weathered, soft, very finely crystalline to aphanitic	425		52 (0)				
					100 (77)				
70			420						
		72.5' - dark grey, slightly fossilifercus below 72.5 ft.			100 (72)				
		Refusal at 64.5 feet. Bottom of borehole at 74.5 feet.							

N_{60} = (Em/60)Nm N_{60} - Corrected N value for standard 60% SPT efficiency; Em - Measured hammer efficiency in percent; Nm - Observed N-value; (1) = Assumed, (2) = Actual

Coordinate System: **Coordinate Zone:** **Coordinate Proj. Factor:**
Coordinate Datum: **Coordinate Units:** U.S. Survey Feet

* Persons using this information are cautioned that the materials shown are determined by the equipment noted and accuracy of the "log of materials" is limited thereby and by judgement of the operator. THIS INFORMATION IS FOR DESIGN PURPOSES ONLY.

LETTER BOREHOLE - MODOT_20151118.GDT - 12/27/24 13:14 - G:\PROJECT FILES\2024\MG24029 I-270 GAP FROM ROUTE 367 TO LILAC AVENUE\FIELD DATA\LILAC AVE\MODOT I-270 - LILAC AVE.GPJ

BORING DATA

Note: For location of borings, see Sheet No. 1.

Detailed August 2025
Checked August 2025

Note: This drawing is not to scale. Follow dimensions.

Sheet No. 43 of 43

STATE OF MISSOURI
RYAN DAVID SHAW
NUMBER PE-2017000388
PROFESSIONAL ENGINEER
THIS SHEET HAS BEEN SIGNED, SEALED AND DATED ELECTRONICALLY

DATE PREPARED 4/1/2026
ROUTE I-270 | STATE MO
DISTRICT BR | SHEET NO. 43
COUNTY ST. LOUIS
JOB NO. J6I3020D
CONTRACT ID.
PROJECT NO.
BRIDGE NO. A9398

DESCRIPTION | DATE

MISSOURI HIGHWAYS AND TRANSPORTATION COMMISSION
105 WEST CAPITOL
JEFFERSON CITY, MO 65102
1-888-ASK-MODOT (1-888-275-6636)

HDR Engineering, Inc.
1001 Highlands Plaza Drive
Suite 200
St. Louis, MO 63110
314-425-8300
Certificate of Authority: 000856

c:\pwworking\central01\d4954830\B_A9398_043_J6I3020D.dgn 2:43:02 PM 4/1/2026

SEC/SUR 35 TWP 47 N RGE 7 E

167.4' MECHANICALLY STABILIZED EARTH (MSE) RETAINING WALL SYSTEM

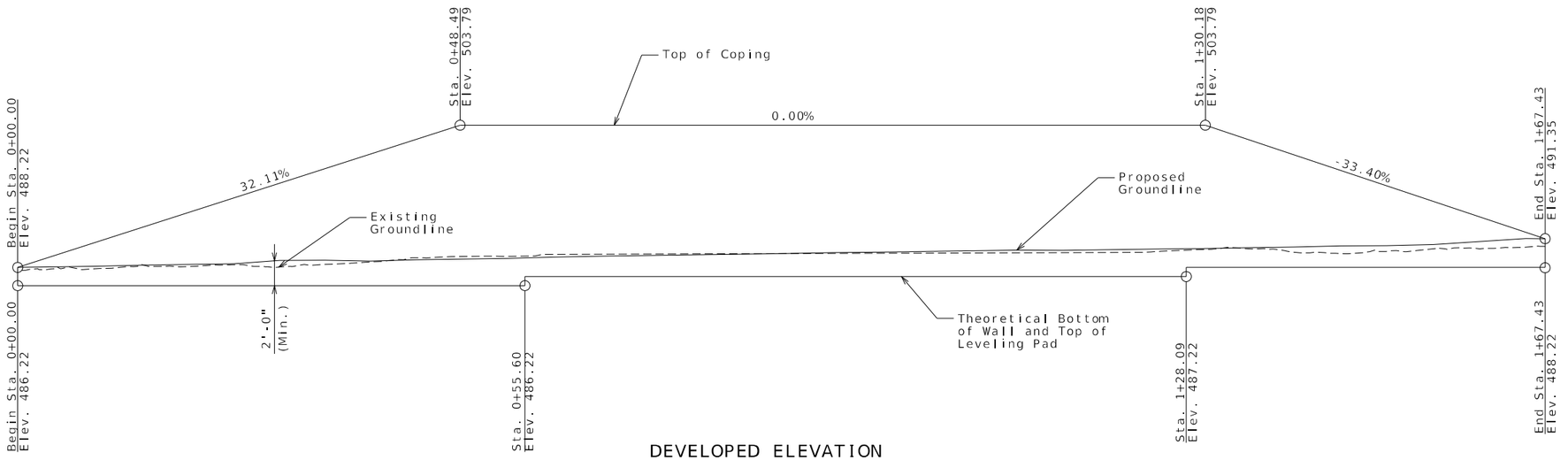

DEVELOPED ELEVATION

Leveling Pad & Coping Not Shown For Clarity. (*)
Stations Along ℄ Wall

BM #1 - CUT SQUARE ON WEST SIDE OF CONC TRAFFIC SIGNAL BASE; ON NORTH SIDE OF I-270 ALSO BEING ON THE EAST SIDE OF LILAC AVE
ELEV= 518.16
NAVD-88

BM #2 - CUT SQUARE ON WEST SIDE OF CONC TRAFFIC SIGNAL BASE; SOUTH OF I-270 ALSO BEING ON THE EAST SIDE OF LILAC AVE
ELEV= 508.26
NAVD-88

Indicates location of borings.

Note:

For General Notes, Estimated Quantities and Location Sketch, see Sheet No. 2.

Notice and Disclaimer Regarding Boring Log Data

The locations of all subsurface borings for this structure are shown on the plan sheet for this structure. The boring data for all locations indicated, as well as any other boring logs or other factual records of subsurface data and investigations performed by the department for the design of the project, are shown on Sheets No. 4 thru 10 and may be included in the Electronic Bridge Deliverables. They will also be available from the Project Contact upon written request. No greater significance or weight should be given to the boring data depicted on the plan sheets than is given to the subsurface data available from the district or elsewhere.

The Commission does not represent or warrant that any such boring data accurately depicts the conditions to be encountered in constructing this project. A contractor assumes all risks it may encounter in basing its bid prices, time or schedule of performance on the boring data depicted here or those available from the district, or on any other documentation not expressly warranted, which the contractor may obtain from the Commission.

(*) Wall contractor shall show the following items on the design drawings and/or on the fabricator shop drawings.

1. Leveling pad horizontal.
2. Leveling pad length and step elevations shall be based on wall manufacturer's recommendation. Top of leveling pad elevations shall not be higher than the theoretical top of leveling pad elevations shown on these plans.

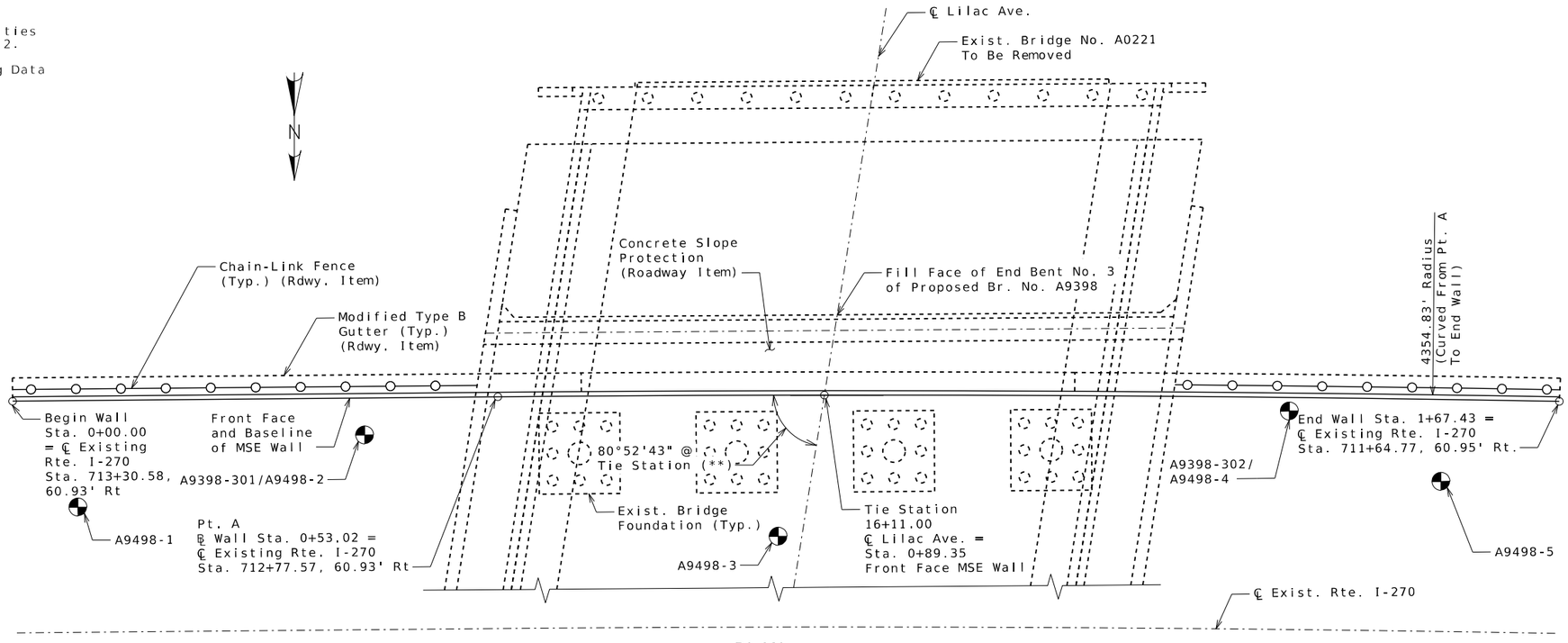

PLAN

(**) Measured to a line tangent to Front Face MSE Wall at Sta. 0+89.35

RETAINING WALL ALONG ROUTE I-270 EB NEAR END BENT NO. 3 OF BRIDGE NO. A9398

ROUTE I-270 FROM ROUTE H TO ROUTE 367

ABOUT 1.1 MILES WEST OF ROUTE H

BEGINNING STATION 0+00.00

Designed October 2025
Detailed October 2025
Checked October 2025

Note: This drawing is not to scale. Follow dimensions.

RYAN DAVID SHAW
NUMBER PE-2011003368
STATE OF MISSOURI
PROFESSIONAL ENGINEER
THIS SHEET HAS BEEN SIGNED, SEALED AND DATED ELECTRONICALLY

DATE PREPARED 3/26/2026
ROUTE I-270 | STATE MO
DISTRICT BR | SHEET NO. 1
COUNTY ST. LOUIS
JOB NO. J6I3020D
CONTRACT ID.
PROJECT NO.
BRIDGE NO. A9498

DESCRIPTION | DATE

MISSOURI HIGHWAYS AND TRANSPORTATION COMMISSION
105 WEST CAPITOL
JEFFERSON CITY, MO 65102
1-888-ASK-MODOT (1-888-275-6636)

HDR Engineering, Inc.
1001 Highlands Plaza Drive
Suite 200
St. Louis, MO 63110
314-425-8300
Certificate of Authority: 000856

General Notes:

Design Specifications:

2020 AASHTO LRFD Bridge Design Specifications (9th Ed.)
2023 AASHTO Guide Specifications for LRFD Seismic Bridge Design (3rd Ed.)
Seismic Design Category = B (Seismic Zone - 2) (Seismic Analysis)
Design earthquake response spectral acceleration coefficient at 1.0 second period, S_{D1} = 0.221
Acceleration Coefficient (effective peak ground acceleration coefficient), A_S = 0.232

Design Loading:

For strength limit state and extreme event limit state, the wall designer to confirm that the minimum Capacity to Demand Ratio (CDR) for bearing, sliding, overturning, eccentricity, and internal stability is greater than or equal to 1.0. MSE wall designer shall include this note on shop drawings.

For Extreme Event I limit state, the wall designer shall design wall for γEQ = 0.5

Φ_b = 25° and Unit weight, γ_b = 120 pcf for retained backfill material to be retained by the mechanically stabilized earth wall system.

Φ_f = 25° for unimproved foundation ground where wall is to bear.

For unimproved foundation ground, factored bearing resistance is 5.0 ksf for strength limit state and factored bearing resistance is 6.9 ksf for extreme event limit state.

The maximum applied factored bearing stress for the strength and extreme event limit state(s) at the foundation level shall be shown on the shop drawings and shall be less than the factored bearing resistance.

Factored bearing resistance shall be used as shown on the plans. No adjustments are allowed.

Contractor shall include design Φ_f (actual $\Phi_f \geq 34°$) and the total unit weight, γ_f, for the select granular backfill (reinforced backfill and wedge area backfill) for structural systems on shop drawings. Contractor shall identify source of select granular backfill material, submit proctor in accordance with AASHTO T 99 (ASTM D698) and gradation with the shop drawings. When backfill material is too coarse to develop a proctor curve the contractor shall determine the maximum dry density (relative density) in accordance with ASTM D4253 and ASTM D4254 and assume percent passing the 200 sieve for optimum water content.

Total unit weight, γ_f = (95% compaction) x (maximum dry density) x (1 + optimum water content)

Design Φ_f = 34°for the select granular backfill (reinforced backfill) for structural systems.

Seismic analysis provisions shall not be ignored for MSE wall design.

Use default values for the pullout friction factor, F^*, in accordance with LRFD figure 11.10.6.3.2-2 and default value for scale effect correction factor, α, in accordance with LRFD table 11.10.6.3.2-1. For approved steel strips not shown in LRFD figure 11.10.6.3.2-2, use $F^* \leq 2.0$ at zero depth and $F^* \leq$ Tan Φ_f at 20 feet depth and Φ_f design = 34°. F^* and α values shall be shown on the shop drawings.

Estimated Quantities

Item		Total
Aesthetic Concrete Stain	lump sum	1
Mechanically Stabilized Earth Wall Systems	sq. foot	2182

MSE Wall Systems Data Table

Proprietary Wall Systems		Combination Wall Systems			
Manufacturer	System	Facing Unit Manufacturer	Facing Unit	Geogrid Manufacturer	Geogrid

MSE Wall Systems Data Table is to be completed by MoDOT construction personnel to record the manufacturer of the proprietary wall system or the manufacturers of the combination wall system that was used for constructing the MSE wall.

Design Unit Stresses:

All concrete for leveling pad and coping shall be Class B or B-1 with f'c = 4,000 psi.

The minimum compressive strength of concrete for precast modular panel shall be 4,000 psi in accordance with Sec 1052.

Excavation:

Excavation quantities and pay items are given on the roadway plans. Excavation quantities are based on a soil reinforcement length of 1.0H, where H is the overall wall height in feet and includes the two feet of added embedment. The soil reinforcement length may vary based upon the wall design selected by the contractor. Plan excavation quantities will be paid regardless of any actual quantities removed based on the soil reinforcement length and design selected.

The MSE wall system shall be built vertical.

The MSE wall system shall be built in accordance with Sec 720.

The MSE wall system shall be a precast modular panel wall system.

Precast modular panel, drycast modular block, wetcast modular block and coping (or capstone) reinforcement shall be epoxy coated.

A filter cloth meeting the requirements for a Separation Geotextile material shall be placed between the select granular backfill for structural systems and the backfill being retained by the mechanically stabilized earth wall system.

Coping shall be required on this structure. When CIP coping sections extend beyond the limits of a single panel, bond breaker (roofing felt or other approved alternate) between wall panel and coping is required. Coping joints shall use 3/4-inch chamfers and shall be sealed with 3/4-inch joint filler. Coping reinforcement shall terminate 1 1/2-inch minimum from face of coping joint.

The contractor shall be solely responsible to coordinate construction of the wall with bridge and roadway construction and ensure that the bridge and roadway construction, resulting or existing obstructions, shall not impact the construction or performance of the wall. Soil reinforcement shall be designed and placed to avoid damage by pile driving, guardrail post installation, utility and sign foundations. (See Roadway and Bridge plans.)

Minimum 18" wide geotextile strips shall be centered at vertical and horizontal joints of panel. Geotextile material shall be adhered to back face of panel using an adhesive compound supplied by the manufacturer. All edges of each fabric strip shall provide a positive seal. A minimum 12" overlap shall be provided between spliced filter fabric.

Aluminized soil reinforcement shall have edges coated with coating material per manufacturer.

Soil reinforcement shall be spaced to avoid roadway drop inlet behind wall.

Upper two layers of soil reinforcement shall be extended 3 feet beyond the lower layers when wall height is greater than or equal to 10 feet.

All steel soil reinforcements shall be separated from other metallic elements by at least 3 inches.

The splay angle should be less than 15° and tensile capacity of splayed reinforcement shall be reduced by the cosine of the splay angle. Soil reinforcement shall clear the obstruction by at least 3 inches.

No reinforcement shall be left unconnected to the wall face or arbitrarily cut/bent in the field to avoid the obstruction.

Where interference between the vertical obstruction and the soil reinforcement is unavoidable, the design of the wall near the obstruction may be modified using one of the alternatives in FHWA-NHI-10-024, Section 5.4.2. Show detail layout on the drawings. For wall designs with horizontal obstructions in reinforced soil mass, see FHWA-NHI-10-024, Section 5.4.3.

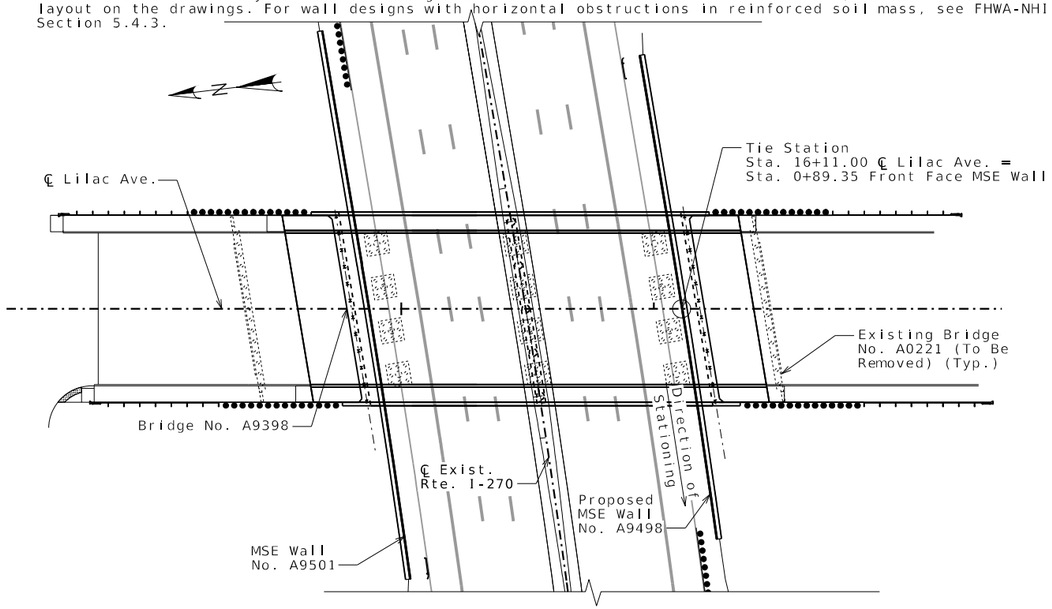

LOCATION SKETCH

RYAN DAVID SHAW
NUMBER PE-2017000368
PROFESSIONAL ENGINEER
STATE OF MISSOURI
THIS SHEET HAS BEEN SIGNED, SEALED AND DATED ELECTRONICALLY

DATE PREPARED
3/26/2026

ROUTE	STATE
I-270	MO
DISTRICT	SHEET NO.
BR	2

COUNTY
ST. LOUIS

JOB NO.
J6I3020D

CONTRACT ID.

PROJECT NO.

BRIDGE NO.
A9498

DATE	DESCRIPTION

MISSOURI HIGHWAYS AND TRANSPORTATION COMMISSION
105 WEST CAPITOL
JEFFERSON CITY, MO 65102
1-888-ASK-MODOT (1-888-275-6636)

HDR Engineering, Inc.
1001 Highlands Plaza Drive
Suite 200
St. Louis, MO 63110
314-425-8300
Certificate of Authority: 000856

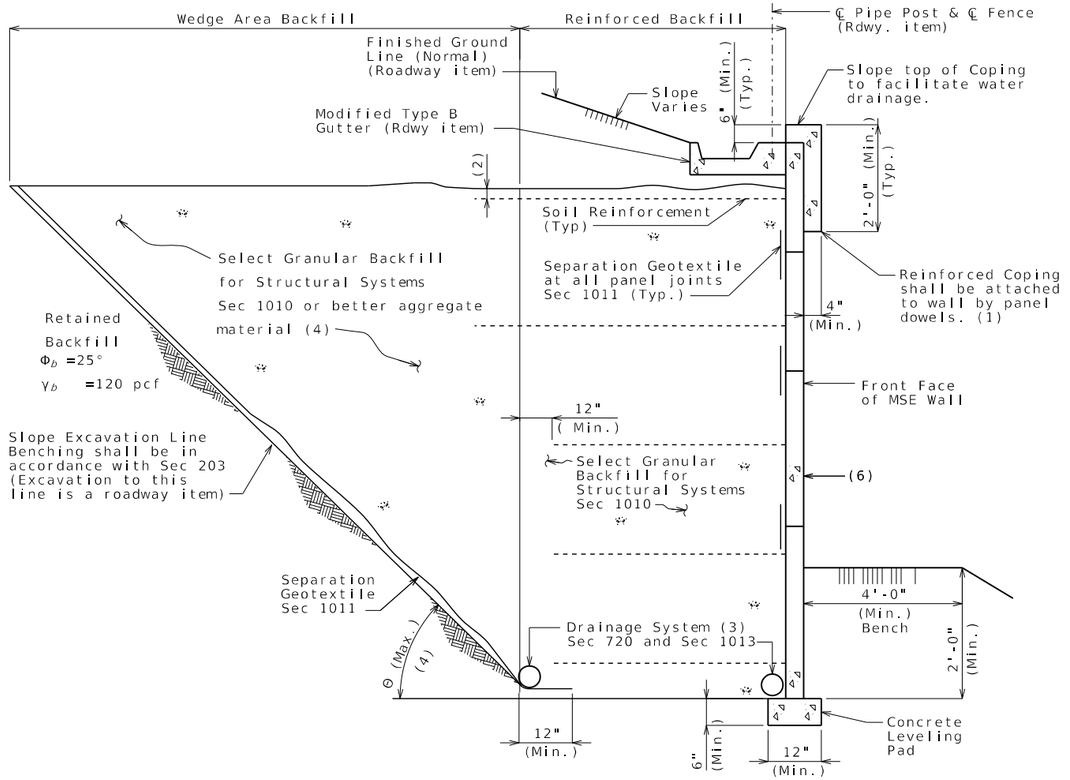

TYPICAL SECTION THRU PRECAST MODULAR PANEL WALL (GENERAL)

(4) Select granular backfill shall extend a minimum of 12" beyond the end of all soil reinforcement. Where the angle, Θ, between the retained backfill excavation/fill line and the horizontal is less than 90°, the wedge area backfill between Θ and 90° shall be filled with select granular backfill for structural systems meeting the requirements of Section 1010.

- For 45° < Θ ≤ 90°, properties for retained backfill shall be used for active force computations.

- For Θ ≤ 45°, contractor shall have the option to use select granular backfill, Φ_f, or better aggregate material for active force computations in the wedge area backfill. For active force computations, the angle of internal friction for wedge area backfill material, Φ_f, shall be limited to 34° unless determined otherwise in accordance with Section 1010. If Φ_f > 34° is desired for wedge area backfill then test report shall be submitted with manufacturer's design plans. Φ_f shall not be greater than 40°. Final configuration of this option shall be sent to Geotechnical Section for a new overall global stability analysis. Design Φ_f° shall be shown on manufacturer's plans if used.

The slope excavation line shall be benched and separation geotextile shall be placed between the retained backfill and either select granular backfill or better aggregate material, and between the select granular backfill and better aggregate material.

Show range of acceptable theta (Θ) angle on shop drawings which must be consistent with design computations and proposed construction of wall. Show active force computation properties ($\Phi° = \Phi_f°$ and $\gamma = \gamma_f$ or $\Phi° = \Phi_b°$ and $\gamma = \gamma_b$) on shop drawings and in design computations. Coordination between wall designer (manufacturer) and contractor is required before shop drawing submittal.

Material Properties Used in Design						
Reinf. Fill/Select Granular Backfill			Active Force Computations			Foundation
Φ_f°	γ_f (pcf)		Φ°	γ (pcf)		Φ_f°

MSE Wall designer shall include table on shop drawings and provide values used in the design computations. Effects of cohesion shall be ignored unless approved by the engineer.

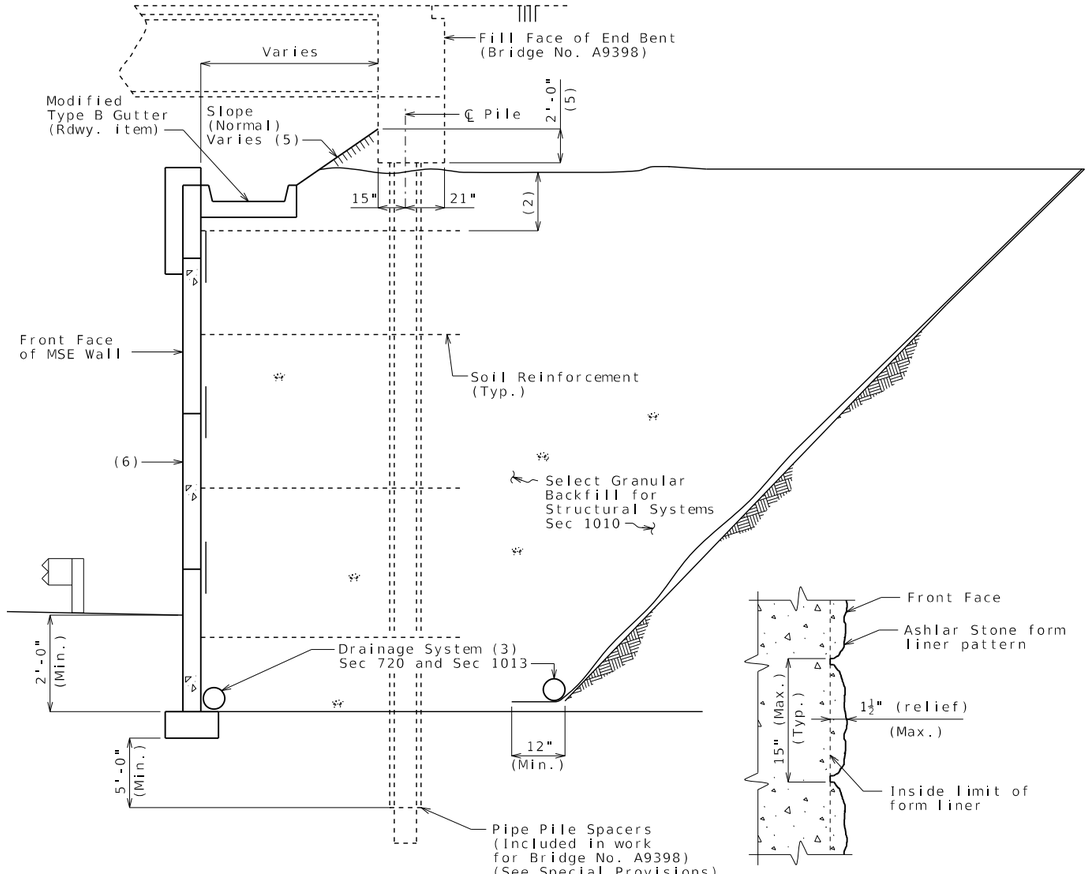

TYPICAL SECTION THRU PRECAST MODULAR PANEL WALL UNDER BRIDGE

Note: For additional information, see Typical Section Thru Precast Modular Panel Wall (General).

FORM LINER DETAIL (PRECAST MODULAR PANEL WALL)

Notes for Form Liners:

The cost of form liners for MSE wall systems,complete in place, will be considered completely covered by the contract unit price for Mechanically Stabilized Earth Wall System.

Form liner shall be constructed in accordance with Special Provisions.

Form liner pattern shall be 'Ashlar Stone'. Manufacturer and form liner pattern shall be approved by the engineer prior to construction.

(1) Inverted U-shape reinforced capstone may be used in lieu of coping. Panel dowels for level-up concrete shall be required, and provided by manufacturer. The dowels shall be field trimmed to clear the capstone by a minumum of 1 1/2 inches and a maximum of 2 1/2 inches.

(2) Topmost layer of reinforcement shall be fully covered with select granular backfill for structural systems, as approved by the wall manufacturer, before placement of the Separation Geotextile.

(3) Minimum 6" diameter perforated PVC or PE pipe.

Manufacturer shall show drain details on design plans to be submitted as shown on MoDOT MSE wall plans and/or roadway plans.

Contractor shall modify the drain details as shown if it will improve flow as may be the case for stepped leveling pad, and for an uneven ground line (approval of the engineer required).

(5) See bridge plans.

(6) Aesthetic Concrete Stain. See special provisions.

DETAILS FOR GENERIC MSE WALL

Detailed October 2025
Checked October 2025

Note: This drawing is not to scale. Follow dimensions.

STATE OF MISSOURI
RYAN DAVID SHAW
NUMBER PE-2011003368
PROFESSIONAL ENGINEER
THIS SHEET HAS BEEN SIGNED, SEALED AND DATED ELECTRONICALLY

DATE PREPARED 3/26/2026
ROUTE I-270 | STATE MO
DISTRICT BR | SHEET NO. 3
COUNTY ST. LOUIS
JOB NO. J6I3020D
CONTRACT ID.
PROJECT NO.
BRIDGE NO. A9498

DESCRIPTION | DATE

MISSOURI HIGHWAYS AND TRANSPORTATION COMMISSION
105 WEST CAPITOL
JEFFERSON CITY, MO 65102
1-888-ASK-MODOT (1-888-275-6636)

HDR Engineering, Inc.
1001 Highlands Plaza Drive
Suite 200
St. Louis, MO 63110
314-425-6300
Certificate of Authority: 000856

Missouri Department of Transportation
Construction and Materials

BORING NO. A9498-1
Page 1 of 2

Job No.: MG24029 **County:** St. Louis **Route:** Lilac Avenue
Design: **Skew:** **Location:** St. Louis County, Missouri
Bent: **Logged By:** B. Nepal **Operator:** G. Shetley
Station: **Northing:** 1068300 **Date of Work:** 06/17/24-06/18/24
Offset: **Easting:** 904999 **Depth to Water:** 28.0
Elevation: 487.5 **Requested Northing:** **Depth Hole Open:**
Requested Station: **Requested Easting:** **Time Change:** At Time of Drilling
Requested Offset: **Equipment:** CME 750Y ,Split-Spoon Sampler, Shelby Tube
Requested Elevation: **Location Note:**
Drill No.: UES **Hammer Efficiency:** 95% **Drilling Method:** Mud Rotary

Depth (ft)	Graphic	Description	Elevation (ft)	Sample Type	REC % (RQD %)	Blow Counts (N_{60})	Shear Data	Field Tests	Index Tests
0		0.0-0.5' TOPSOIL (6")							
		0.5-5.5' FILL: Brown, lean CLAY (CL), trace gravel	485		92		Qu Test Results UCS = 5.24 ksf MC = 17.9% γ_{moist} = 130.1616 pcf	PP = 3.50 tsf	
					63			PP = 2.50 tsf	LL = 38 PL = 14
5					96		Qu Test Results MC = 11.6% γ_{moist} = 133.6968 pcf	PP = 2.50 tsf	
		5.5-40.0' Brown, SAND (SP), fine to medium grained, medium dense	480		50		Qu Test Results UCS = 2.96 ksf MC = 15.5% γ_{moist} = 137.907 pcf		MC = 8.0%
		8.0' Sieve Analysis at 8.0 ft.: - 0.0% retained on No. 4 sieve - 1.0% passing on No. 200 sieve			100				MC = 5.4%
10		10.0' Sieve Analysis at 10.0 ft.: - 1.3% retained on No. 4 sieve - 1.3% passing on No. 200 sieve			100				MC = 6.4%
			475		100	4-4-4 (13)			MC = 11.6%
15					78	5-4-3 (11)			MC = 12.1%
			470		100	3-4-4 (13)			MC = 10.5%
		18.5' Sieve Analysis at 18.5 ft.: - 0.0% retained on No. 4 sieve - 1.8% passing on No. 200 sieve			89	3-3-4 (11)			MC = 8.1%
20			465						
25					78	3-3-3 (10)			MC = 6.8%
			460						
30		30.0' - mud rotary drilling below 30 ft.			100	2-3-5 (13)			MC = 19.0%
			455						
35		33.5' Sieve Analysis at 33.5 ft.: - 1.6% retained on No. 4 sieve			78	3-3-4 (11)			

N_{60} = (Em/60)Nm N_{60} - Corrected N value for standard 60% SPT efficiency; Em - Measured hammer efficiency in percent; Nm - Observed N-value; (1) = Assumed, (2) = Actual

Coordinate System: **Coordinate Zone:** **Coordinate Proj. Factor:**
Coordinate Datum: **Coordinate Units:** U.S. Survey Feet

* Persons using this information are cautioned that the materials shown are determined by the equipment noted and accuracy of the "log of materials" is limited thereby and by judgement of the operator. THIS INFORMATION IS FOR DESIGN PURPOSES ONLY.

(Continued Next Page)

Missouri Department of Transportation
Construction and Materials

BORING NO. A9498-1
Page 2 of 2

Job No.: MG24029 **County:** St. Louis **Route:** Lilac Avenue
Design: **Skew:** **Location:** St. Louis County, Missouri
Bent: **Logged By:** B. Nepal **Operator:** G. Shetley
Station: **Northing:** 1068300 **Date of Work:** 06/17/24-06/18/24
Offset: **Easting:** 904999 **Depth to Water:** 28.0
Elevation: 487.5 **Requested Northing:** **Depth Hole Open:**
Requested Station: **Requested Easting:** **Time Change:** At Time of Drilling
Requested Offset: **Equipment:** CME 750Y ,Spit-Spoon Sampler, Shelby Tube
Requested Elevation: **Location Note:**
Drill No.: UES **Hammer Efficiency:** 95% **Drilling Method:** Mud Rotary

Depth (ft)	Graphic	Description	Elevation (ft)	Sample Type	REC % (RQD %)	Blow Counts (N_{60})	Shear Data	Field Tests	Index Tests
35		- 2.3% passing on No. 200 sieve 5.5-40.0' Brown, SAND (SP), fine to medium grained, medium dense *(continued)*	450						
40					78	5-4-3 (11)			
		Bottom of borehole at 40.0 feet.							

N_{60} = (Em/60)Nm N_{60} - Corrected N value for standard 60% SPT efficiency; Em - Measured hammer efficiency in percent; Nm - Observed N-value; (1) = Assumed, (2) = Actual

Coordinate System: **Coordinate Zone:** **Coordinate Proj. Factor:**
Coordinate Datum: **Coordinate Units:** U.S. Survey Feet

* Persons using this information are cautioned that the materials shown are determined by the equipment noted and accuracy of the "log of materials" is limited thereby and by judgement of the operator. THIS INFORMATION IS FOR DESIGN PURPOSES ONLY.

STATE OF MISSOURI
RYAN DAVID SHAW
NUMBER PE-2011000368
PROFESSIONAL ENGINEER
THIS SHEET HAS BEEN SIGNED, SEALED AND DATED ELECTRONICALLY

DATE PREPARED 3/26/2026
ROUTE I-270 | STATE MO
DISTRICT BR | SHEET NO. 4
COUNTY ST. LOUIS
JOB NO. J6I3020D
CONTRACT ID.
PROJECT NO.
BRIDGE NO. A9498

DESCRIPTION | DATE

MISSOURI HIGHWAYS AND TRANSPORTATION COMMISSION
105 WEST CAPITOL
JEFFERSON CITY, MO 65102
1-888-ASK-MODOT (1-888-275-6636)

HDR Engineering, Inc.
1001 Highlands Plaza Drive
Suite 200
St. Louis, MO 63110
314-425-8300
Certificate of Authority: 000856

BORING DATA

Note: For locations of borings, see Sheet No. 1.

Detailed October 2025
Checked October 2025

Note: This drawing is not to scale. Follow dimensions.

c:\pwworking\central01\d4955182\B_A9498_004_J6I3020D.dgn 2:15:35 PM 3/26/2026

LETTER BOREHOLE_MODOT_20151118.GDT - 12/27/24 13:14 - G:\PROJECT FILES\2024\MG24029 I-270 GAP FROM ROUTE 367 TO LILAC AVENUE\FIELD DATA\LILAC AVE\MODOT I-270 - LILAC AVE.GPJ

Missouri Department of Transportation
Construction and Materials

BORING NO. A9398-301/A9498-2
Page 1 of 3

Job No.: MG24029 **County:** St. Louis **Route:** Lilac Avenue
Design: **Skew:** **Location:** St. Louis County, Missouri
Bent: **Logged By:** B. Nepal **Operator:** G. Shetley
Station: **Northing:** 1068296 **Date of Work:** 06/17/24-06/19/24
Offset: **Easting:** 904948.1 **Depth to Water:**
Elevation: 488.9 **Requested Northing:** **Depth Hole Open:**
Requested Station: **Requested Easting:** **Time Change:**
Requested Offset: **Equipment:** CME 750Y ,Split-Spoon Sampler, Shelby Tube, NQ
Requested Elevation: **Location Note:**
Drill No.: UES **Hammer Efficiency:** 95% **Drilling Method:** Mud Rotary

Depth (ft)	Graphic	Description	Elevation (ft)	Sample Type	REC % (RQD %)	Blow Counts (N_{60})	Shear Data	Field Tests	Index Tests
0		0.0-0.5' TOPSOIL (6")							
		0.5-22.0' Brown, SAND (SP), fine to medium grained, loose to medium dense	485		92				
5			480		78	4-4-3 (11)			MC = 8.6%
10			475		100				
15		15.0' - mud rotary drilling below 15 ft.	470		78	4-4-4 (13)			
20		18.5' Sieve Analysis at 18.5 ft.: - 0.5% retained on No. 4 sieve - 3.0% passing on No. 200 sieve	465		61	4-6-7 (21)			
25		22.0-42.0' Brown, SAND (SP), fine to coarse grained, loose to medium dense, trace gravel	460		50	4-5-5 (16)			
30		28.5' Sieve Analysis at 28.5 ft.: - 2.1% retained on No. 4 sieve							

N_{60} = (Em/60)Nm N_{60} - Corrected N value for standard 60% SPT efficiency; Em - Measured hammer efficiency in percent; Nm - Observed N-value; (1) = Assumed, (2) = Actual

Coordinate System: **Coordinate Zone:** **Coordinate Proj. Factor:**
Coordinate Datum: **Coordinate Units:** U.S. Survey Feet

* Persons using this information are cautioned that the materials shown are determined by the equipment noted and accuracy of the "log of materials" is limited thereby and by judgement of the operator. THIS INFORMATION IS FOR DESIGN PURPOSES ONLY.

(Continued Next Page)

Missouri Department of Transportation
Construction and Materials

BORING NO. A9398-301/A9498-2
Page 2 of 3

Job No.: MG24029 **County:** St. Louis **Route:** Lilac Avenue
Design: **Skew:** **Location:** St. Louis County, Missouri
Bent: **Logged By:** B. Nepal **Operator:** G. Shetley
Station: **Northing:** 1068296 **Date of Work:** 06/17/24-06/19/24
Offset: **Easting:** 904948.1 **Depth to Water:**
Elevation: 488.9 **Requested Northing:** **Depth Hole Open:**
Requested Station: **Requested Easting:** **Time Change:**
Requested Offset: **Equipment:** CME 750Y ,Spit-Spoon Sampler, Shelby Tube, NQ
Requested Elevation: **Location Note:**
Drill No.: UES **Hammer Efficiency:** 95% **Drilling Method:** Mud Rotary

Depth (ft)	Graphic	Description	Elevation (ft)	Sample Type	REC % (RQD %)	Blow Counts (N_{60})	Shear Data	Field Tests	Index Tests
30		- 4.3% passing on No. 200 sieve 22.0-42.0' Brown, SAND (SP), fine to coarse grained, loose to medium dense, trace gravel *(continued)*							
35			455		61	3-3-3 (10)			
40		38.5' Sieve Analysis at 38.5 ft.: - 1.9% retained on No. 4 sieve - 2.8% passing on No. 200 sieve	450		56	6-6-6 (19)			
45		42.0-57.0' Brown, SAND (SW), fine to coarse grained, medium dense, trace gravel	445		60	5-5-6 (17)			
50		48.5' Sieve Analysis at 48.5 ft.: - 21.7% retained on No. 4 sieve - 7.5% passing on No. 200 sieve	440		60	5-4-4 (13)			
55			435		53	9-8-7 (24)			
60		57.0-66.0' Brown and grey, weathered SHALE	430		72	5-6-11 (27)		PP = 4.50 tsf	MC = 23.9%

N_{60} = (Em/60)Nm N_{60} - Corrected N value for standard 60% SPT efficiency; Em - Measured hammer efficiency in percent; Nm - Observed N-value; (1) = Assumed, (2) = Actual

Coordinate System: **Coordinate Zone:** **Coordinate Proj. Factor:**
Coordinate Datum: **Coordinate Units:** U.S. Survey Feet

* Persons using this information are cautioned that the materials shown are determined by the equipment noted and accuracy of the "log of materials" is limited thereby and by judgement of the operator. THIS INFORMATION IS FOR DESIGN PURPOSES ONLY.

(Continued Next Page)

LETTER BOREHOLE - MODOT_20151118.GDT - 12/27/24 13:14 - G:\PROJECT FILES\2024\MG24029 I-270 GAP FROM ROUTE 367 TO LILAC AVENUE\FIELD DATA\LILAC AVE\MODOT I-270 - LILAC AVE.GPJ

STATE OF MISSOURI
RYAN DAVID SHAW
NUMBER PE-2011003368
PROFESSIONAL ENGINEER
THIS SHEET HAS BEEN SIGNED, SEALED AND DATED ELECTRONICALLY

DATE PREPARED 3/26/2026
ROUTE I-270 | STATE MO
DISTRICT BR | SHEET NO. 5
COUNTY ST. LOUIS
JOB NO. J6I3020D
CONTRACT ID.
PROJECT NO.
BRIDGE NO. A9498

DESCRIPTION | DATE

MISSOURI HIGHWAYS AND TRANSPORTATION COMMISSION
105 WEST CAPITOL
JEFFERSON CITY, MO 65102
1-888-ASK-MODOT (1-888-275-6636)

HDR Engineering, Inc.
1001 Highlands Plaza Drive
Suite 200
St. Louis, MO 63110
314-425-8300
Certificate of Authority: 000856

BORING DATA

Note: For locations of borings, see Sheet No. 1.

Detailed October 2025
Checked October 2025

Note: This drawing is not to scale. Follow dimensions.

c:\pwworking\central01\d4955182\B_A9498_005_J6I3020D.dgn 2:16:06 PM 3/26/2026

Missouri Department of Transportation
Construction and Materials

BORING NO. A9398-301/A9498-2
Page 3 of 3

Job No.: MG24029 **County:** St. Louis **Route:** Lilac Avenue
Design: **Skew:** **Location:** St. Louis County, Missouri
Bent: **Logged By:** B. Nepal **Operator:** G. Shetley
Station: **Northing:** 1068296 **Date of Work:** 06/17/24-06/19/24
Offset: **Easting:** 904948.1 **Depth to Water:**
Elevation: 488.9 **Requested Northing:** **Depth Hole Open:**
Requested Station: **Requested Easting:** **Time Change:**
Requested Offset: **Equipment:** CME 750Y ,Split-Spoon Sampler, Shelby Tube, NQ
Requested Elevation: **Location Note:**
Drill No.: UES **Hammer Efficiency:** 95% **Drilling Method:** Mud Rotary

Depth (ft)	Graphic	Description	Elevation (ft)	Sample Type	REC % (RQD %)	Blow Counts (N_{60})	Shear Data	Field Tests	Index Tests
60		57.0-66.0' Brown and grey, weathered SHALE *(continued)*			100	36-50/0.3'		PP = 4.50 tsf	MC = 19.1%
		62.3' - compressive strength = 22 psi	425						
65					75	28-50/0.2'		PP = 4.00 tsf	MC = 20.8%
		66.0-76.0' Grey, SHALE, moderately weathered, soft, very finely crystalline, moderately fractured			100 (75)				
70			420		98 (98)				
			415		100 (100)				
75		Refusal at 66.0 feet. Bottom of borehole at 76.0 feet.							

N_{60} = (Em/60)Nm N_{60} - Corrected N value for standard 60% SPT efficiency; Em - Measured hammer efficiency in percent; Nm - Observed N-value; (1) = Assumed, (2) = Actual

Coordinate System: **Coordinate Zone:** **Coordinate Proj. Factor:**
Coordinate Datum: **Coordinate Units:** U.S. Survey Feet

* Persons using this information are cautioned that the materials shown are determined by the equipment noted and accuracy of the "log of materials" is limited thereby and by judgement of the operator. THIS INFORMATION IS FOR DESIGN PURPOSES ONLY.

LETTER BOREHOLE - MODOT_20151118.GDT - 12/27/24 13:14 - G:\PROJECT FILES\2024\MG24129 I-270 GAP FROM ROUTE 367 TO LILAC AVENUE\FIELD DATA\LILAC AVE\MODOT I-270 - LILAC AVE.GPJ

BORING DATA

Note: For locations of borings, see Sheet No. 1.

Detailed October 2025
Checked October 2025

Note: This drawing is not to scale. Follow dimensions.

STATE OF MISSOURI
RYAN DAVID SHAW
NUMBER PE-2011003368
PROFESSIONAL ENGINEER
THIS SHEET HAS BEEN SIGNED, SEALED AND DATED ELECTRONICALLY

DATE PREPARED 3/26/2026
ROUTE I-270 | STATE MO
DISTRICT BR | SHEET NO. 6
COUNTY ST. LOUIS
JOB NO. J6I3020D
CONTRACT ID.
PROJECT NO.
BRIDGE NO. A9498

DESCRIPTION | DATE

MISSOURI HIGHWAYS AND TRANSPORTATION COMMISSION
105 WEST CAPITOL
JEFFERSON CITY, MO 65102
1-888-ASK-MODOT (1-888-275-6636)

HDR Engineering, Inc.
1001 Highlands Plaza Drive
Suite 200
St. Louis, MO 63110
314-425-8300
Certificate of Authority: 000856

c:\pwworking\central01\d4955182\B_A9498_006_J6I3020D.dgn 2:16:38 PM 3/26/2026

Missouri Department of Transportation
Construction and Materials

BORING NO. A9498-3
Page 1 of 2

Job No.: MG24029 **County:** St. Louis **Route:** Lilac Avenue
Design: **Skew:** **Location:** St. Louis County, Missouri
Bent: **Logged By:** J. Stauffer **Operator:** S. Conrad
Station: **Northing:** 1068289 **Date of Work:** 06/18/24-06/19/24
Offset: **Easting:** 904895.7 **Depth to Water:**
Elevation: 489.4 **Requested Northing:** **Depth Hole Open:**
Requested Station: **Requested Easting:** **Time Change:**
Requested Offset: **Equipment:** CME 55LC ,Split-Spoon Sampler
Requested Elevation: **Location Note:**
Drill No.: UES **Hammer Efficiency:** 79% **Drilling Method:** Mud Rotary

Depth (ft)	Graphic	Description	Elevation (ft)	Sample Type	REC % (RQD %)	Blow Counts (N_{60})	Shear Data	Field Tests	Index Tests
0		0.0-2.0' FILL: Brown, lean CLAY (CL)							
		2.0-2.5' CONCRETE (6")							
5		2.5-7.0' FILL: Brown, lean CLAY (CL)	485	X	0	4-4-3 (9)			
		7.0-40.0' Brown, SAND (SP), fine to medium grained, loose to medium dense, trace clay							
10			480	X	78	3-3-4 (9)			MC = 14.0%
15		15.0' - mud rotary drilling below 15 ft.	475	X	100	3-5-3 (11)			MC = 10.6%
20			470	X	61	3-4-6 (13)			
25		23.5' - trace gravel below 23.5 ft.	465	X	50	4-6-7 (17)			
30			460	X	44	5-5-6 (14)			
35			455	X	56	4-6-7 (17)			

N_{60} = (Em/60)Nm N_{60} - Corrected N value for standard 60% SPT efficiency; Em - Measured hammer efficiency in percent; Nm - Observed N-value; (1) = Assumed, (2) = Actual

Coordinate System: **Coordinate Zone:** **Coordinate Proj. Factor:**
Coordinate Datum: **Coordinate Units:** U.S. Survey Feet

* Persons using this information are cautioned that the materials shown are determined by the equipment noted and accuracy of the "log of materials" is limited thereby and by judgement of the operator. THIS INFORMATION IS FOR DESIGN PURPOSES ONLY.

(Continued Next Page)

LETTER BOREHOLE - MODOT_20151118.GDT - 12/27/24 13:14 - G:\PROJECT FILES\2024\MG24029 I-270 GAP FROM ROUTE 367 "O LILAC AVENUE\FIELD DATA\LILAC AVE\MODOT I-270 - LILAC AVE.GPJ

Missouri Department of Transportation
Construction and Materials

BORING NO. A9498-3
Page 2 of 2

Job No.: MG24029 **County:** St. Louis **Route:** Lilac Avenue
Design: **Skew:** **Location:** St. Louis County, Missouri
Bent: **Logged By:** J. Stauffer **Operator:** S. Conrad
Station: **Northing:** 1068289 **Date of Work:** 06/18/24-06/19/24
Offset: **Easting:** 904895.7 **Depth to Water:**
Elevation: 489.4 **Requested Northing:** **Depth Hole Open:**
Requested Station: **Requested Easting:** **Time Change:**
Requested Offset: **Equipment:** CME 55LC ,Split-Spoon Sampler
Requested Elevation: **Location Note:**
Drill No.: UES **Hammer Efficiency:** 79% **Drilling Method:** Mud Rotary

Depth (ft)	Graphic	Description	Elevation (ft)	Sample Type	REC % (RQD %)	Blow Counts (N_{60})	Shear Data	Field Tests	Index Tests
35		7.0-40.0' Brown, SAND (SP), fine to medium grained, loose to medium dense, trace clay *(continued)*							
40		Bottom of borehole at 40.0 feet.	450	X	56	4-6-6 (16)			

N_{60} = (Em/60)Nm N_{60} - Corrected N value for standard 60% SPT efficiency; Em - Measured hammer efficiency in percent; Nm - Observed N-value; (1) = Assumed, (2) = Actual

Coordinate System: **Coordinate Zone:** **Coordinate Proj. Factor:**
Coordinate Datum: **Coordinate Units:** U.S. Survey Feet

* Persons using this information are cautioned that the materials shown are determined by the equipment noted and accuracy of the "log of materials" is limited thereby and by judgement of the operator. THIS INFORMATION IS FOR DESIGN PURPOSES ONLY.

LETTER BOREHOLE - MODOT_20151118.GDT - 12/27/24 13:14 - G:\PROJECT FILES\2024\MG24029 I-270 GAP FROM ROUTE 367 "O LILAC AVENUE\FIELD DATA\LILAC AVE\MODOT I-270 - LILAC AVE.GPJ

STATE OF MISSOURI
RYAN DAVID SHAW
NUMBER PE-2011003368
PROFESSIONAL ENGINEER
THIS SHEET HAS BEEN SIGNED, SEALED AND DATED ELECTRONICALLY

DATE PREPARED 3/26/2026
ROUTE I-270 | STATE MO
DISTRICT BR | SHEET NO. 7
COUNTY ST. LOUIS
JOB NO. J6I3020D
CONTRACT ID.
PROJECT NO.
BRIDGE NO. A9498

DESCRIPTION | DATE | REVISION

MISSOURI HIGHWAYS AND TRANSPORTATION COMMISSION
105 WEST CAPITOL
JEFFERSON CITY, MO 65102
1-888-ASK-MODOT (1-888-275-6636)

HDR Engineering, Inc.
1001 Highlands Plaza Drive
Suite 200
St. Louis, MO 63110
314-425-8300
Certificate of Authority: 000856

BORING DATA

Note: For locations of borings, see Sheet No. 1.

Detailed October 2025
Checked October 2025

Note: This drawing is not to scale. Follow dimensions.

c:\pwworking\central01\d4955182\B_A9498_007_J6I3020D.dgn 2:16:58 PM 3/26/2026

Missouri Department of Transportation
Construction and Materials

BORING NO. A9398-302/A9498-4
Page 1 of 3

Job No.: MG24029 **County:** St. Louis **Route:** Lilac Avenue
Design: **Skew:** **Location:** St. Louis County, Missouri
Bent: **Logged By:** B. Nepal **Operator:** G. Shetley
Station: **Northing:** 1068289 **Date of Work:** 06/19/24-06/21/24
Offset: **Easting:** 904845.4 **Depth to Water:**
Elevation: 489.8 **Requested Northing:** **Depth Hole Open:**
Requested Station: **Requested Easting:** **Time Change:**
Requested Offset: **Equipment:** CME 750Y ,Split-Spoon Sampler, Shelby Tube, NQ
Requested Elevation: **Location Note:**
Drill No.: UES **Hammer Efficiency:** 95% **Drilling Method:** Mud Rotary

Depth (ft)	Graphic	Description	Elevation (ft)	Sample Type	REC % (RQD %)	Blow Counts (N_{60})	Shear Data	Field Tests	Index Tests
0		0.0-0.5' TOPSOIL (6")							
		0.5-8.0' FILL: Brown, lean CLAY (CL), trace gravel			63			PP = 4.50 tsf	MC = 14.7%
					79		Qu Test Results UCS = 3.52 ksf MC = 20.3% γ_{moist} = 129.4428 pcf	PP = 3.50 tsf	MC = 20.3%
5		4.0' - UU Test performed at 4.0 ft.: shear strength = 0.98 tsf dry density = 100.7 pcf	485		83			PP = 2.00 tsf	MC = 22.2%
		6.0' - UU Test performed at 6.0 ft.: dry density = 101.9 pcf			88			PP = 1.25 tsf	LL = 32 PL = 19 MC = 22.6%
		8.0-12.0' Brown, lean CLAY (CL), with sand			92			PP = 0.50 tsf	MC = 18.8%
10		8.1' - UU Test performed at 8.0 ft.: shear strength = 0.53 tsf dry density = 107.5 pcf	480		100		Qu Test Results UCS = 1.64 ksf MC = 16.2% γ_{moist} = 135.954 pcf	PP = 1.00 tsf	LL = 38 PL = 14 MC = 16.2%
		12.0-47.0' Brown, SAND (SP), fine to medium grained, medium dense, trace gravel			96				
15			475	X	94	0-3-4 (11)			MC = 13.9%
		17.0' - 1.5% passing No. 200 sieve		X	94	4-4-4 (13)			MC = 8.8%
20			470	X	100	4-3-5 (13)			MC = 6.8%
		20.0' - mud rotary drilling below 20 ft.							
25			465	X	89	4-7-8 (24)			
30		29.0' - 3.1% passing No. 200 sieve	460	X	67	3-6-6 (19)			

N_{60} = (Em/60)Nm N_{60} - Corrected N value for standard 60% SPT efficiency; Em - Measured hammer efficiency in percent; Nm - Observed N-value; (1) = Assumed, (2) = Actual

Coordinate System: **Coordinate Zone:** **Coordinate Proj. Factor:**
Coordinate Datum: **Coordinate Units:** U.S. Survey Feet

* Persons using this information are cautioned that the materials shown are determined by the equipment noted and accuracy of the "log of materials" is limited thereby and by judgement of the operator. THIS INFORMATION IS FOR DESIGN PURPOSES ONLY.

(Continued Next Page)

Missouri Department of Transportation
Construction and Materials

BORING NO. A9398-302/A9498-4
Page 2 of 3

Job No.: MG24029 **County:** St. Louis **Route:** Lilac Avenue
Design: **Skew:** **Location:** St. Louis County, Missouri
Bent: **Logged By:** B. Nepal **Operator:** G. Shetley
Station: **Northing:** 1068289 **Date of Work:** 06/19/24-06/21/24
Offset: **Easting:** 904845.4 **Depth to Water:**
Elevation: 489.8 **Requested Northing:** **Depth Hole Open:**
Requested Station: **Requested Easting:** **Time Change:**
Requested Offset: **Equipment:** CME 750Y ,Split-Spoon Sampler, Shelby Tube, NQ
Requested Elevation: **Location Note:**
Drill No.: UES **Hammer Efficiency:** 95% **Drilling Method:** Mud Rotary

Depth (ft)	Graphic	Description	Elevation (ft)	Sample Type	REC % (RQD %)	Blow Counts (N_{60})	Shear Data	Field Tests	Index Tests
30		12.0-47.0' Brown, SAND (SP), fine to medium grained, medium dense, trace gravel *(continued)*							
35			455	X	72	3-5-3 (13)			
40		39.0' - 1.4% passing No. 200 sieve	450	X	83	2-3-4 (11)			
45			445	X	56	4-4-7 (17)			
		47.0-57.0' Brown, SAND (SW), fine to coarse grained, loose, with gravel							
50			440	X	67	6-4-5 (14)			
		52.0' - with sandstone fragments below 52 ft.							
55			435	X	33	6-4-5 (14)			
		57.0-64.5' Grey, clayey SHALE							
60			430	X	50	4-3-3 (10)			MC = 17.0%

N_{60} = (Em/60)Nm N_{60} - Corrected N value for standard 60% SPT efficiency; Em - Measured hammer efficiency in percent; Nm - Observed N-value; (1) = Assumed, (2) = Actual

Coordinate System: **Coordinate Zone:** **Coordinate Proj. Factor:**
Coordinate Datum: **Coordinate Units:** U.S. Survey Feet

* Persons using this information are cautioned that the materials shown are determined by the equipment noted and accuracy of the "log of materials" is limited thereby and by judgement of the operator. THIS INFORMATION IS FOR DESIGN PURPOSES ONLY.

(Continued Next Page)

BORING DATA

Note: For locations of borings, see Sheet No. 1.

Detailed October 2025
Checked October 2025

Note: This drawing is not to scale. Follow dimensions.

STATE OF MISSOURI
RYAN DAVID SHAW
NUMBER PE-2011000368
PROFESSIONAL ENGINEER
THIS SHEET HAS BEEN SIGNED, SEALED AND DATED ELECTRONICALLY

DATE PREPARED 3/26/2026
ROUTE I-270 | STATE MO
DISTRICT BR | SHEET NO. 8
COUNTY ST. LOUIS
JOB NO. J6I3020D
CONTRACT ID.
PROJECT NO.
BRIDGE NO. A9498

DESCRIPTION | DATE

MISSOURI HIGHWAYS AND TRANSPORTATION COMMISSION
105 WEST CAPITOL
JEFFERSON CITY, MO 65102
1-888-ASK-MODOT (1-888-275-6636)

HDR Engineering, Inc.
1001 Highlands Plaza Drive
Suite 200
St. Louis, MO 63110
314-425-8300
Certificate of Authority: 000856

LETTER BOREHOLE - MODOT 20151118.GDT - 12/27/24 13:14 - G:\PROJECT FILES\2024\MG24029 I-270 GAP FROM ROUTE 367 TO LILAC AVENUE\FIELD DATA\LILAC AVE\MODOT I-270 - LILAC AVE.GPJ

Missouri Department of Transportation
Construction and Materials

BORING NO. A9398-302/A9498-4
Page 3 of 3

Job No.: MG24029 **County:** St. Louis **Route:** Lilac Avenue
Design: **Skew:** **Location:** St. Louis County, Missouri
Bent: **Logged By:** B. Nepal **Operator:** G. Shetley
Station: **Northing:** 1068289 **Date of Work:** 06/19/24-06/21/24
Offset: **Easting:** 904845.4 **Depth to Water:**
Elevation: 489.8 **Requested Northing:** **Depth Hole Open:**
Requested Station: **Requested Easting:** **Time Change:**
Requested Offset: **Equipment:** CME 750Y ,Split-Spoon Sampler, Shelby Tube, NQ
Requested Elevation: **Location Note:**
Drill No.: UES **Hammer Efficiency:** 95% **Drilling Method:** Mud Rotary

Depth (ft)	Graphic	Description	Elevation (ft)	Sample Type	REC % (RQD %)	Blow Counts (N_{60})	Shear Data	Field Tests	Index Tests
60		57.0-64.5' Grey, clayey SHALE *(continued)*							
					100	23-50/0.5'			MC = 17.6%
65		64.5-74.5' Grey, SHALE, moderately to highly weathered, soft, very finely crystalline to aphanitic	425		52 (0)				
					100 (77)				
70			420						
		72.5' - dark grey, slightly fossiliferous below 72.5 ft.			100 (72)				
		Refusal at 64.5 feet. Bottom of borehole at 74.5 feet.							

N_{60} = (Em/60)Nm N_{60} - Corrected N value for standard 60% SPT efficiency; Em - Measured hammer efficiency in percent; Nm - Observed N-value; (1) = Assumed, (2) = Actual

Coordinate System: **Coordinate Zone:** **Coordinate Proj. Factor:**
Coordinate Datum: **Coordinate Units:** U.S. Survey Feet

* Persons using this information are cautioned that the materials shown are determined by the equipment noted and accuracy of the "log of materials" is limited thereby and by judgement of the operator. THIS INFORMATION IS FOR DESIGN PURPOSES ONLY.

LETTER BOREHOLE - MODOT_20151118.GDT - 12/27/24 13:14 - G:\PROJECT FILES\2024\MG24129 I-270 GAP FROM ROUTE 367 TO LILAC AVENUE\FIELD DATA\LILAC AVE\MODOT I-270 - LILAC AVE.GPJ

BORING DATA

Note: For locations of borings, see Sheet No. 1.

Detailed October 2025
Checked October 2025

Note: This drawing is not to scale. Follow dimensions.

STATE OF MISSOURI
RYAN DAVID SHAW
NUMBER PE-2011003368
PROFESSIONAL ENGINEER
THIS SHEET HAS BEEN SIGNED, SEALED AND DATED ELECTRONICALLY

DATE PREPARED 3/26/2026
ROUTE I-270 | STATE MO
DISTRICT BR | SHEET NO. 9
COUNTY ST. LOUIS
JOB NO. J6I3020D
CONTRACT ID.
PROJECT NO.
BRIDGE NO. A9498

DESCRIPTION | DATE

MISSOURI HIGHWAYS AND TRANSPORTATION COMMISSION
105 WEST CAPITOL
JEFFERSON CITY, MO 65102
1-888-ASK-MODOT (1-888-275-6636)

HDR Engineering, Inc.
1001 Highlands Plaza Drive
Suite 200
St. Louis, MO 63110
314-425-8300
Certificate of Authority: 000856

Missouri Department of Transportation
Construction and Materials

BORING NO. A9498-5
Page 1 of 2

Job No.: MG24029 **County:** St. Louis **Route:** Lilac Avenue
Design: **Skew:** **Location:** St. Louis County, Missouri
Bent: **Logged By:** J. Stauffer **Operator:** S. Conrad
Station: **Northing:** 1068288 **Date of Work:** 06/17/24-06/18/24
Offset: **Easting:** 904798 **Depth to Water:**
Elevation: 490.7 **Requested Northing:** **Depth Hole Open:**
Requested Station: **Requested Easting:** **Time Change:**
Requested Offset: **Equipment:** CME 55LC ,Split-Spoon Sampler
Requested Elevation: **Location Note:**
Drill No.: UES **Hammer Efficiency:** 79% **Drilling Method:** Mud Rotary

Depth (ft)	Graphic	Description	Elevation (ft)	Sample Type	REC % (RQD %)	Blow Counts (N_{60})	Shear Data	Field Tests	Index Tests
0		0.0-0.3' TOPSOIL (3")	490						
		0.3-7.0' FILL: Brown, lean CLAY (CL)							
5			485	X	17	5-7-7 (18)			MC = 13.5%
		7.0-12.0' Brown, lean CLAY (CL)							
10			480	X	72	3-3-3 (8)			MC = 22.3%
		12.0-17.0' Brown, sandy lean CLAY (CL)							
15			475	X	78	2-3-3 (8)			MC = 13.8%
		15.0' - mud rotary drilling below 15 ft.							
		17.0-40.0' Brown, SAND (SP), fine to medium grained, medium dense							
20			470	X	72	4-4-5 (12)			
25			465	X	61	5-6-6 (16)			
		28.5' - trace gravel below 28.5 ft.							
30			460	X	56	4-5-6 (14)			
35				X	56	4-6-6 (16)			

N_{60} = (Em/60)Nm N_{60} - Corrected N value for standard 60% SPT efficiency; Em - Measured hammer efficiency in percent; Nm - Observed N-value; (1) = Assumed, (2) = Actual

Coordinate System: **Coordinate Zone:** **Coordinate Proj. Factor:**
Coordinate Datum: **Coordinate Units:** U.S. Survey Feet

* Persons using this information are cautioned that the materials shown are determined by the equipment noted and accuracy of the "log of materials" is limited thereby and by judgement of the operator. THIS INFORMATION IS FOR DESIGN PURPOSES ONLY.

(Continued Next Page)

LETTER BOREHOLE - MODOT_20151118.GDT - 12/27/24 13:14 - G:\PROJECT FILES\2024\MG24029 I-270 GAP FROM ROUTE 367 "O LILAC AVENUE\FIELD DATA\LILAC AVE\MODOT I-270 - LILAC AVE.GPJ

Missouri Department of Transportation
Construction and Materials

BORING NO. A9498-5
Page 2 of 2

Job No.: MG24029 **County:** St. Louis **Route:** Lilac Avenue
Design: **Skew:** **Location:** St. Louis County, Missouri
Bent: **Logged By:** J. Stauffer **Operator:** S. Conrad
Station: **Northing:** 1068288 **Date of Work:** 06/17/24-06/18/24
Offset: **Easting:** 904798 **Depth to Water:**
Elevation: 490.7 **Requested Northing:** **Depth Hole Open:**
Requested Station: **Requested Easting:** **Time Change:**
Requested Offset: **Equipment:** CME 55LC ,Split-Spoon Sampler
Requested Elevation: **Location Note:**
Drill No.: UES **Hammer Efficiency:** 79% **Drilling Method:** Mud Rotary

Depth (ft)	Graphic	Description	Elevation (ft)	Sample Type	REC % (RQD %)	Blow Counts (N_{60})	Shear Data	Field Tests	Index Tests
35		17.0-40.0' Brown, SAND (SP), fine to medium grained, medium dense *(continued)*	455						
40				X	72	4-3-5 (11)			
		Bottom of borehole at 40.0 feet.							

N_{60} = (Em/60)Nm N_{60} - Corrected N value for standard 60% SPT efficiency; Em - Measured hammer efficiency in percent; Nm - Observed N-value; (1) = Assumed, (2) = Actual

Coordinate System: **Coordinate Zone:** **Coordinate Proj. Factor:**
Coordinate Datum: **Coordinate Units:** U.S. Survey Feet

* Persons using this information are cautioned that the materials shown are determined by the equipment noted and accuracy of the "log of materials" is limited thereby and by judgement of the operator. THIS INFORMATION IS FOR DESIGN PURPOSES ONLY.

LETTER BOREHOLE - MODOT_20151118.GDT - 12/27/24 13:14 - G:\PROJECT FILES\2024\MG24029 I-270 GAP FROM ROUTE 367 "O LILAC AVENUE\FIELD DATA\LILAC AVE\MODOT I-270 - LILAC AVE.GPJ

STATE OF MISSOURI
RYAN DAVID SHAW
NUMBER PE-2011003368
PROFESSIONAL ENGINEER
THIS SHEET HAS BEEN SIGNED, SEALED AND DATED ELECTRONICALLY

DATE PREPARED 3/26/2026
ROUTE I-270 | STATE MO
DISTRICT BR | SHEET NO. 10
COUNTY ST. LOUIS
JOB NO. J6I3020D
CONTRACT ID.
PROJECT NO.
BRIDGE NO. A9498

DESCRIPTION | DATE

MISSOURI HIGHWAYS AND TRANSPORTATION COMMISSION
105 WEST CAPITOL
JEFFERSON CITY, MO 65102
1-888-ASK-MODOT (1-888-275-6636)

HDR Engineering, Inc.
1001 Highlands Plaza Drive
Suite 200
St. Louis, MO 63110
314-425-8300
Certificate of Authority: 000856

BORING DATA

Note: For locations of borings, see Sheet No. 1.

Detailed October 2025
Checked October 2025

Note: This drawing is not to scale. Follow dimensions.

c:\pwworking\central01\d4955182\B_A9498_010_J6I3020D.dgn 2:18:19 PM 3/26/2026

SEC/SUR 35 TWP 47 N RGE 7 E

205.1' MECHANICALLY STABILIZED EARTH (MSE) RETAINING WALL SYSTEM

BM #1 - CUT SQUARE ON WEST SIDE OF CONC TRAFFIC SIGNAL BASE; ON NORTH SIDE OF I-270 ALSO BEING ON THE EAST SIDE OF LILAC AVE
ELEV= 518.16
NAVD-88

BM #2 - CUT SQUARE ON WEST SIDE OF CONC TRAFFIC SIGNAL BASE; SOUTH OF I-270 ALSO BEING ON THE EAST SIDE OF LILAC AVE
ELEV= 508.26
NAVD-88

◓ Indicates location of borings.

Notice and Disclaimer Regarding Boring Log Data

The locations of all subsurface borings for this structure are shown on the plan sheet for this structure. The boring data for all locations indicated, as well as any other boring logs or other factual records of subsurface data and investigations performed by the department for the design of the project, are shown on Sheets No. 4 thru 8 and may be included in the Electronic Bridge Deliverables. They will also be available from the Project Contact upon written request. No greater significance or weight should be given to the boring data depicted on the plan sheets than is given to the subsurface data available from the districtor elsewhere.

The Commission does not represent or warrant that any such boring data accurately depicts the conditions to be encountered in constructing this project. A contractor assumes all risks it may encounter in basing its bid prices, time or schedule of performance on the boring data depicted here or those available from the district, or on any other documentation not expressly warranted, which the contractor may obtain from the Commission.

(*) Wall contractor shall show the following items on the design drawings and/or on the fabricator shop drawings.

1. Leveling pad horizontal.
2. Leveling pad length and step elevations shall be based on wall manufacturer's recommendation. Top of leveling pad elevations shall not be higher than the theoretical top of leveling pad elevations shown on these plans.

Notes:

For General Notes, Estimated Quantities and Location Sketch, see Sheet No. 2.

For Detail of Ground Improvements, see Sheet No. 3.

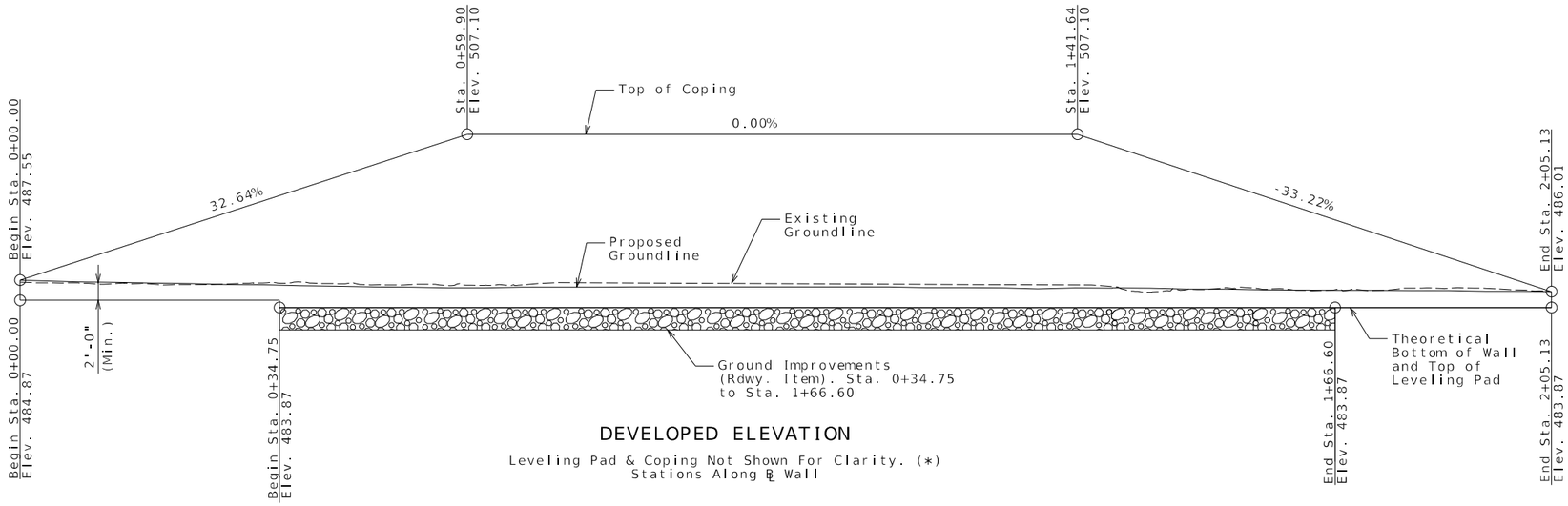

DEVELOPED ELEVATION

Leveling Pad & Coping Not Shown For Clarity. (*)
Stations Along ℄ Wall

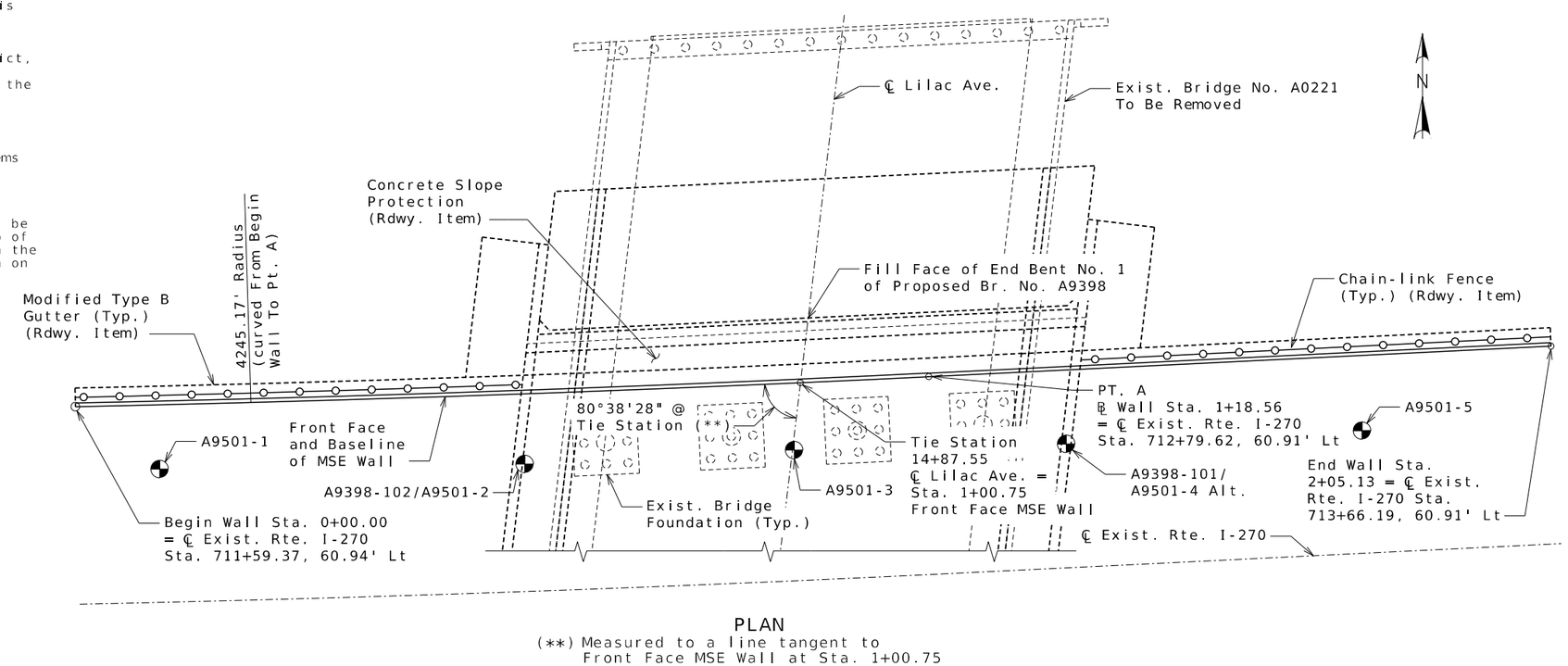

PLAN

(**) Measured to a line tangent to Front Face MSE Wall at Sta. 1+00.75

RETAINING WALL ALONG ROUTE I-270 WB NEAR END BENT NO. 1 OF BRIDGE NO. A9398

ROUTE I-270 FROM ROUTE H TO ROUTE 367

ABOUT 1.1 MILES WEST OF ROUTE H

BEGINNING STATION 0+00.00

Designed October 2025
Detailed October 2025
Checked October 2025

Note: This drawing is not to scale. Follow dimensions.

RYAN DAVID SHAW NUMBER PE-2017000386 STATE OF MISSOURI PROFESSIONAL ENGINEER

THIS SHEET HAS BEEN SIGNED, SEALED AND DATED ELECTRONICALLY

DATE PREPARED 3/26/2026

ROUTE	STATE
I-270	MO
DISTRICT	SHEET NO.
BR	1

COUNTY ST. LOUIS

JOB NO. J6I3020D

CONTRACT ID.

PROJECT NO.

BRIDGE NO. A9501

DATE	DESCRIPTION

MISSOURI HIGHWAYS AND TRANSPORTATION COMMISSION
105 WEST CAPITOL
JEFFERSON CITY, MO 65102
1-888-ASK-MODOT (1-888-275-6636)

HDR Engineering, Inc.
1001 Highlands Plaza Drive
Suite 200
St. Louis, MO 63110-1337
314-425-8300
Certificate of Authority: 000856

General Notes:

Design Specifications:

2020 AASHTO LRFD Bridge Design Specifications (9th Ed.)
2023 AASHTO Guide Specifications for LRFD Seismic Bridge Design (3rd Ed.)
Seismic Design Category = B (Seismic Zone - 2) (Seismic Analysis)
Design earthquake response spectral acceleration coefficient at 1.0 second period, S_{D1} = 0.221
Acceleration Coefficient (effective peak ground acceleration coefficient), A_S = 0.232

Design Loading:

For strength limit state and extreme event limit state, the wall designer to confirm that the minimum Capacity to Demand Ratio (CDR) for bearing, sliding, overturning, eccentricity, and internal stability is greater than or equal to 1.0. MSE wall designer shall include this note on shop drawings.

For Extreme Event I limit state, the wall designer shall design wall for γEQ = 0.5

Φ_b = 25° and Unit weight, γ_b = 120 pcf for retained backfill material to be retained by the mechanically stabilized earth wall system.

Φ_f = 25° for unimproved foundation ground where wall is to bear.

Φ_f = 34° for improved foundation ground where wall is to bear.

For unimproved foundation ground, factored bearing resistance is 4.0 ksf for strength limit state and factored bearing resistance is 5.5 ksf for extreme event limit state.

For improved foundation ground, factored bearing resistance is 5.5 ksf for strength limit state and factored bearing resistance is 7.6 for extreme event limit state.

The maximum applied factored bearing stress for the strength and extreme event limit state(s) at the foundation level shall be shown on the shop drawings and shall be less than the factored bearing resistance.

Factored bearing resistance and limits of improved foundation ground shall be used as shown on the plans. No adjustments are allowed.

Contractor shall include design Φr (actual $\Phi r \geq 34°$) and the total unit weight, γr, for the select granular backfill (reinforced backfill and wedge area backfill) for structural systems on shop drawings. Contractor shall identify source of select granular backfill material, submit proctor in accordance with AASHTO T 99 (ASTM D698) and gradation with the shop drawings. When backfill material is too coarse to develop a proctor curve the contractor shall determine the maximum dry density (relative density) in accordance with ASTM D4253 and ASTM D4254 and assume percent passing the 200 sieve for optimum water content.

Total unit weight, γr = (95% compaction) x (maximum dry density) x (1 + optimum water content)

Design Φr = 34°for the select granular backfill (reinforced backfill) for structural systems.

Seismic analysis provisions shall not be ignored for MSE wall design.

Use default values for the pullout friction factor, F*, in accordance with LRFD figure 11.10.6.3.2-2 and default value for scale effect correction factor, α, in accordance with LRFD table 11.10.6.3.2-1. For approved steel strips not shown in LRFD figure 11.10.6.3.2-2, use $F^* \leq 2.0$ at zero depth and $F^* \leq \text{Tan } \Phi r$ at 20 feet depth and Φr design = 34°. F* and α values shall be shown on the shop drawings.

Design Unit Stresses:

All concrete for leveling pad and coping shall be Class B or B-1 with f'c = 4,000 psi.

The minimum compressive strength of concrete for precast modular panel shall be 4,000 psi in accordance with Sec 1052.

Excavation:

Excavation quantities and pay items are given on the roadway plans. Excavation quantities are based on a soil reinforcement length of 1.0H, where H is the overall wall height in feet and includes the two feet of added embedment. The soil reinforcement length may vary based upon the wall design selected by the contractor. Plan excavation quantities will be paid regardless of any actual quantities removed based on the soil reinforcement length and design selected.

The MSE wall system shall be built vertical.

The MSE wall system shall be built in accordance with Sec 720.

The MSE wall system shall be a precast modular panel wall system.

Precast modular panel, drycast modular block, wetcast modular block and coping (or capstone) reinforcement shall be epoxy coated.

A filter cloth meeting the requirements for a Separation Geotextile material shall be placed between the select granular backfill for structural systems and the backfill being retained by the mechanically stabilized earth wall system.

Coping shall be required on this structure. When CIP coping sections extend beyond the limits of a single panel, bond breaker (roofing felt or other approved alternate) between wall panel and coping is required. Coping joints shall use 3/4-inch chamfers and shall be sealed with 3/4-inch joint filler. Coping reinforcement shall terminate 1 1/2-inch minimum from face of coping joint.

The contractor shall be solely responsible to coordinate construction of the wall with bridge and roadway construction and ensure that the bridge and roadway construction, resulting or existing obstructions, shall not impact the construction or performance of the wall. Soil reinforcement shall be designed and placed to avoid damage by pile driving, guardrail post installation, utility and sign foundations. (See Roadway and Bridge plans.)

Minimum 18" wide geotextile strips shall be centered at vertical and horizontal joints of panel. Geotextile material shall be adhered to back face of panel using an adhesive compound supplied by the manufacturer. All edges of each fabric strip shall provide a positive seal. A minimum 12" overlap shall be provided between spliced filter fabric.

Aluminized soil reinforcement shall have edges coated with coating material per manufacturer.

Soil reinforcement shall be spaced to avoid roadway drop inlet behind wall.

Upper two layers of soil reinforcement shall be extended 3 feet beyond the lower layers when wall height is greater than or equal to 10 feet.

All steel soil reinforcements shall be separated from other metallic elements by at least 3 inches.

The splay angle should be less than 15° and tensile capacity of splayed reinforcement shall be reduced by the cosine of the splay angle. Soil reinforcement shall clear the obstruction by at least 3 inches.

No reinforcement shall be left unconnected to the wall face or arbitrarily cut/bent in the field to avoid the obstruction.

Where interference between the vertical obstruction and the soil reinforcement is unavoidable, the design of the wall near the obstruction may be modified using one of the alternatives in FHWA-NHI-10-024, Section 5.4.2. Show detail layout on the drawings. For wall designs with horizontal obstructions in reinforced soil mass, see FHWA-NHI-10-024, Section 5.4.3.

Estimated Quantities

Item		Total
Aesthetic Concrete Stain	lump sum	1
Mechanically Stabilized Earth Wall Systems	sq. foot	3476

MSE Wall Systems Data Table

Proprietary Wall Systems		Combination Wall Systems			
Manufacturer	System	Facing Unit Manufacturer	Facing Unit	Geogrid Manufacturer	Geogrid

MSE Wall Systems Data Table is to be completed by MoDOT construction personnel to record the manufacturer of the proprietary wall system or the manufacturers of the combination wall system that was used for constructing the MSE wall.

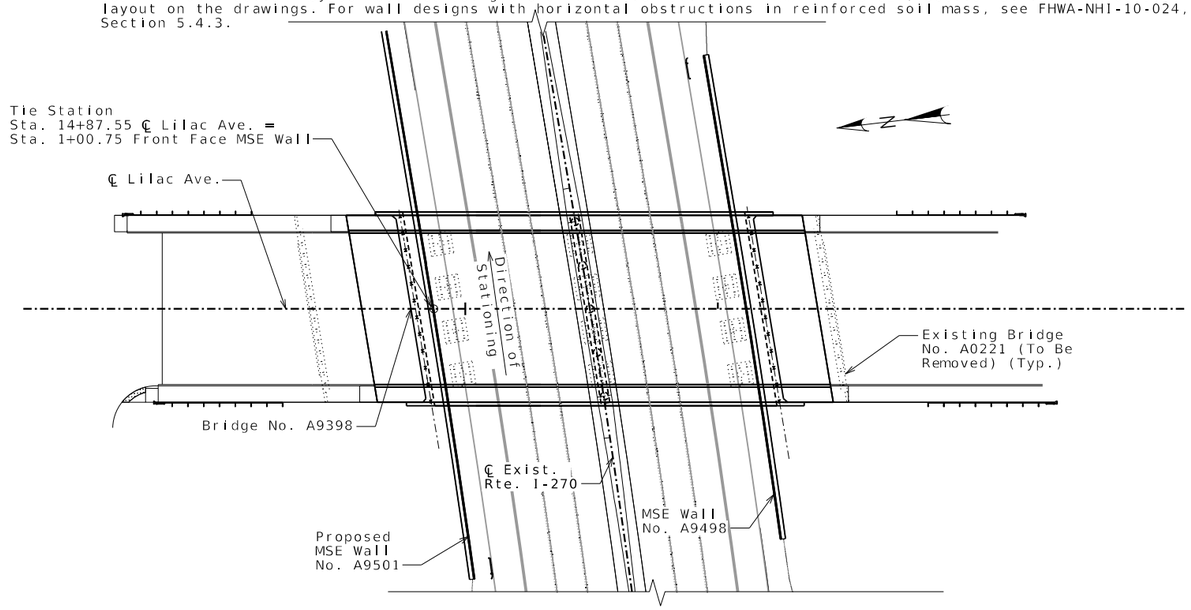

LOCATION SKETCH

Detailed October 2025
Checked October 2025

Note: This drawing is not to scale. Follow dimensions.

STATE OF MISSOURI
RYAN DAVID SHAW
NUMBER PE-2017000368
PROFESSIONAL ENGINEER
THIS SHEET HAS BEEN SIGNED, SEALED AND DATED ELECTRONICALLY

DATE PREPARED 3/26/2026
ROUTE I-270 | STATE MO
DISTRICT BR | SHEET NO. 2
COUNTY ST. LOUIS
JOB NO. J6I3020D
CONTRACT ID.
PROJECT NO.
BRIDGE NO. A9501

DATE	DESCRIPTION

MISSOURI HIGHWAYS AND TRANSPORTATION COMMISSION
105 WEST CAPITOL
JEFFERSON CITY, MO 65102
1-888-ASK-MODOT (1-888-275-6636)

HDR Engineering, Inc.
1001 Highlands Plaza Drive
Suite 200
St. Louis, MO 63110-1337
314-425-8300
Certificate of Authority: 000856

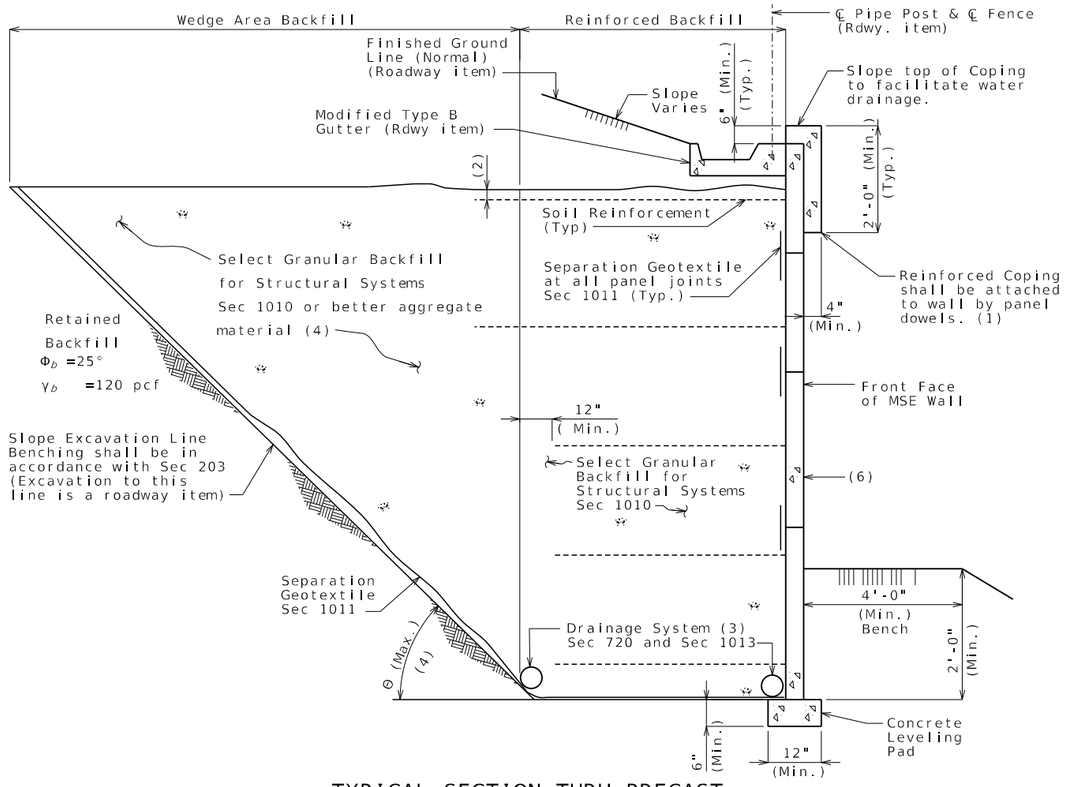

TYPICAL SECTION THRU PRECAST MODULAR PANEL WALL (GENERAL)

(4) Select granular backfill shall extend a minimum of 12" beyond the end of all soil reinforcement. Where the angle, Θ, between the retained backfill excavation/fill line and the horizontal is less than 90°, the wedge area backfill between Θ and 90° shall be filledwith select granular backfill for structural systems meeting the requirements of Section 1010.

- For 45° < Θ ≤ 90°, properties for retained backfill shall be used for active force computations.

- For Θ ≤ 45°, contractor shall have the option to use select granular backfill, Φ_r, or better aggregate material for active force computations in the wedge area backfill. For active force computations, the angle of internal friction for wedge area backfill material, Φ_r, shall be limited to 34° unless determined otherwise in accordance with Section 1010. If Φ_r > 34° is desired for wedge area backfill then test report shall be submitted with manufacturer's design plans. Φ_r shall not be greater than 40°. Final configuration of this option shall be sent to Geotechnical Section for a new overall global stability analysis. Design Φ_r° shall be shown on manufacturer's plans if used.

The slope excavation line shall be benched and separation geotextile shall be placed between the retained backfill and either select granular backfill or better aggregate material, and between the select granular backfill and better aggregate material.

Show range of acceptable theta (Θ) angle on shop drawings which must be consistent with design computations and proposed construction of wall. Show active force computation properties ($\Phi° = \Phi_r°$ and $\gamma = \gamma_r$ or $\Phi° = \Phi_b°$ and $\gamma = \gamma_b$) on shop drawings and in design computations. Coordination between wall designer (manufacturer) and contractor is required before shop drawing submittal.

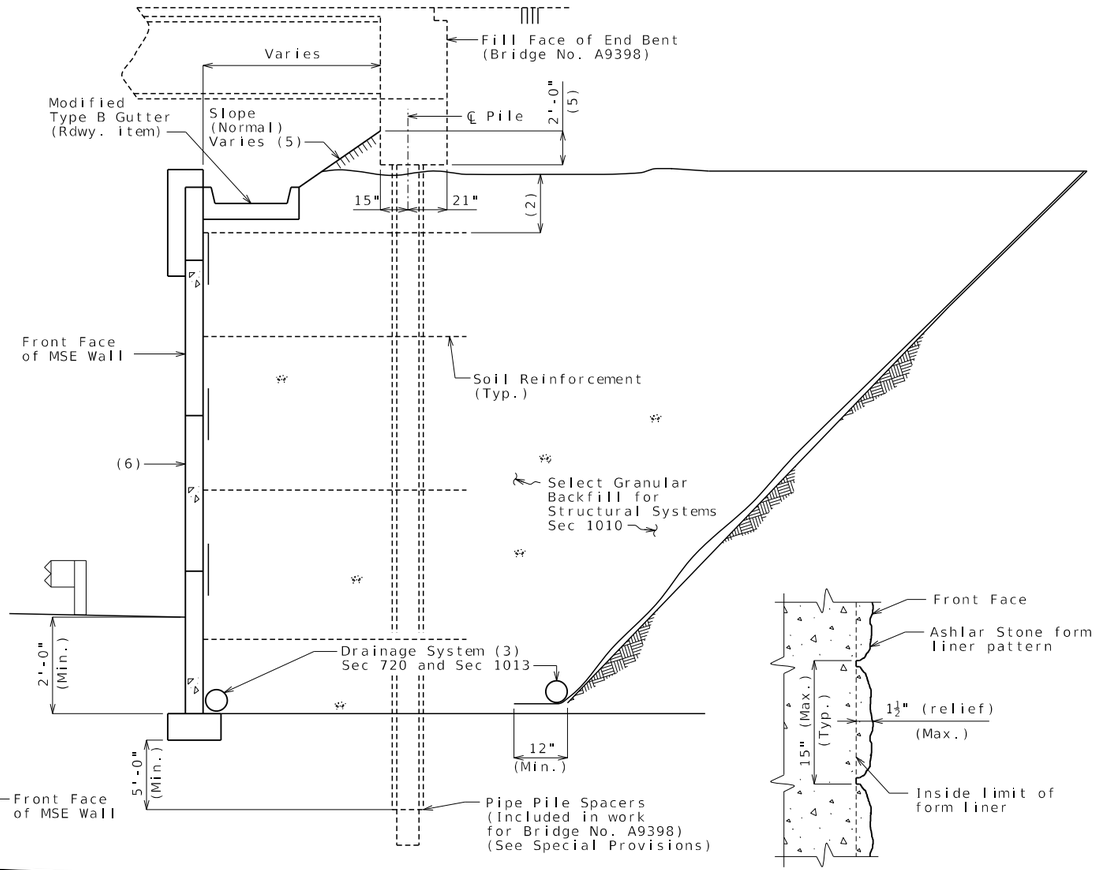

TYPICAL SECTION THRU PRECAST MODULAR PANEL WALL UNDER BRIDGE

Notes: For additional information, see Typical Section Thru Precast Modular Panel Wall (General).

Foundation Improvements not shown for clarity. See Details of Ground Improvements.

(1) Inverted U-shape reinforced capstone may be used in lieu of coping. Panel dowels for level-up concrete shall be required, and provided by manufacturer. The dowels shall be field trimmed to clear the capstone by a minumum of 1 1/2 inches and a maximum of 2 1/2 inches.

(2) Topmost layer of reinforcement shall be fully covered with select granular backfill for structural systems, as approved by the wall manufacturer, before placement of the Separation Geotextile.

(3) Minimum 6" diameter perforated PVC or PE pipe.

Manufacturer shall show drain details on design plans to be submitted as shown on MoDOT MSE wall plans and/or roadway plans.

Contractor shall modify the drain details as shown if it will improve flow as may be the case for stepped leveling pad, and for an uneven ground line (approval of the engineer required).

(5) See bridge plans.

(6) Aesthetic Concrete Stain. See special provisions.

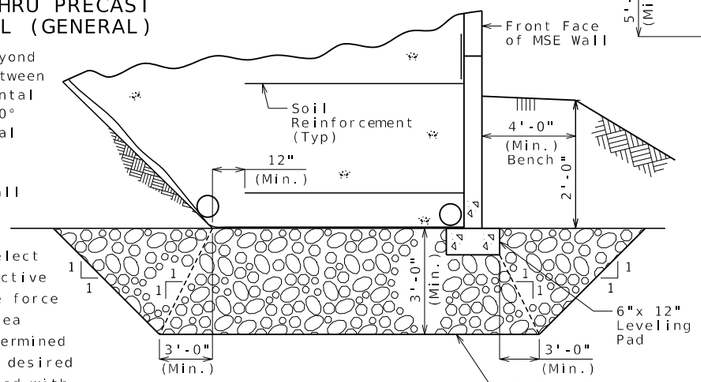

DETAILS OF GROUND IMPROVEMENTS

Material Properties Used in Design							
Reinf. Fill/Select Granular Backfill			Active Force Computations			Foundation
Φ_r°	γ_r (pcf)		Φ°	γ (pcf)		Φ_r°

MSE Wall designer shall include table on shop drawings and provide values used in the design computations. Effects of cohesion shall be ignored unless approved by the engineer.

FORM LINER DETAIL (PRECAST MODULAR PANEL WALL)

Notes for Form Liners:

The cost of form liners for MSE wall systems,complete in place, will be considered completely covered by the contract unit price for Mechanically Stabilized Earth Wall System.

Form liner shall be constructed in accordance with Special Provisions.

Form liner pattern shall be 'Ashlar Stone'. Manufacturer and form liner pattern shall be approved by the engineer prior to construction.

DETAILS FOR GENERIC MSE WALL

Detailed October 2025
Checked October 2025

Note: This drawing is not to scale. Follow dimensions.

STATE OF MISSOURI
RYAN DAVID SHAW
NUMBER PE-2017003396
PROFESSIONAL ENGINEER
THIS SHEET HAS BEEN SIGNED, SEALED AND DATED ELECTRONICALLY

DATE PREPARED 3/26/2026
ROUTE I-270 | STATE MO
DISTRICT BR | SHEET NO. 3
COUNTY ST. LOUIS
JOB NO. J6I3020D
CONTRACT ID.
PROJECT NO.
BRIDGE NO. A9501

DESCRIPTION | DATE

MISSOURI HIGHWAYS AND TRANSPORTATION COMMISSION
105 WEST CAPITOL
JEFFERSON CITY, MO 65102
1-888-ASK-MODOT (1-888-275-6636)

HDR Engineering, Inc.
1001 Highlands Plaza Drive
Suite 200
St. Louis, MO 63110-1337
314-425-8300
Certificate of Authority: 000856

Missouri Department of Transportation
Construction and Materials

BORING NO. A9501-1
Page 1 of 2

Job No.: MG24029 **County:** St. Louis **Route:** Lilac Avenue
Design: **Skew:** **Location:** St. Louis County, Missour
Bent: **Logged By:** J. Stauffer **Operator:** S. Conrad
Station: **Northing:** 1068406 **Date of Work:** 06/24/24-06/25/24
Offset: **Easting:** 904812.6 **Depth to Water:**
Elevation: 487.1 **Requested Northing:** **Depth Hole Open:**
Requested Station: **Requested Easting:** **Time Change:**
Requested Offset: **Equipment:** CME 55LC ,Split-Spoon Sampler, Shelby Tube
Requested Elevation: **Location Note:**
Drill No.: UES **Hammer Efficiency:** 79% **Drilling Method:** Mud Rotary

Depth (ft)	Graphic	Description	Elevation (ft)	Sample Type	REC % (RQD %)	Blow Counts (N_{60})	Shear Data	Field Tests	Index Tests
0		0.0-8.0' FILL: Brown, lean CLAY (CL)	485		100			PP = 2.00 tsf	
		2.0' - UU Test performed at 2.0 ft.: shear strength = 0.79 tsf dry density = 103.8 pcf			92		Qu Test Results UCS = 2.96 ksf MC = 18.9% γ_{moist} = 129.7199 pcf	PP = 1.50 tsf	LL = 33 PL = 19 MC = 20.4%
5					92			PP = 1.50 tsf	
		6.0' - trace sand below 5 ft.	480		100		Qu Test Results UCS = 2.16 ksf MC = 19.4% γ_{moist} = 131.1012 pcf	PP = 1.00 tsf	
10		8.0-40.0' Brown, SAND (SP) fine to medium grained, medium dense			96		Qu Test Results UCS = 1.64 ksf MC = 18.9% γ_{moist} = 136.8539 pcf		MC = 12.3%
			475		83	4-7-9 (21)			MC = 13.9%
15		15.0' - mud rotary drilling below 15 ft.			100	6-10-8 (24)			MC = 12.3%
			470		72	4-7-6 (17)			
20					83	5-5-5 (13)			
			465						
25		23.5' - trace gravel below 23.5 ft.			72	5-5-6 (14)			
			460						
30					61	4-5-5 (13)			
			455						
35					50	4 4 4 (11)			

N_{60} = (Em/60)Nm N_{60} - Corrected N value for standard 60% SPT efficiency; Em - Measured hammer efficiency in percent; Nm - Observed N-value; (1) = Assumed, (2) = Actual

Coordinate System: **Coordinate Zone:** **Coordinate Proj. Factor:**
Coordinate Datum: **Coordinate Units:** U.S. Survey Feet

* Persons using this information are cautioned that the materials shown are determined by the equipment noted and accuracy of the "log of materials" is limited thereby and by judgement of the operator. THIS INFORMATION IS FOR DESIGN PURPOSES ONLY.

(Continued Next Page)

Missouri Department of Transportation
Construction and Materials

BORING NO. A9501-1
Page 2 of 2

Job No.: MG24029 **County:** St. Louis **Route:** Lilac Avenue
Design: **Skew:** **Location:** St. Louis County, Missouri
Bent: **Logged By:** J. Stauffer **Operator:** S. Conrad
Station: **Northing:** 1068406 **Date of Work:** 06/24/24-06/25/24
Offset: **Easting:** 904812.6 **Depth to Water:**
Elevation: 487.1 **Requested Northing:** **Depth Hole Open:**
Requested Station: **Requested Easting:** **Time Change:**
Requested Offset: **Equipment:** CME 55LC ,Split-Spoon Sampler, Shelby Tube
Requested Elevation: **Location Note:**
Drill No.: UES **Hammer Efficiency:** 79% **Drilling Method:** Mud Rotary

Depth (ft)	Graphic	Description	Elevation (ft)	Sample Type	REC % (RQD %)	Blow Counts (N_{60})	Shear Data	Field Tests	Index Tests
35		8.0-40.0' Brown, SAND (SP) fine to medium grained, medium dense *(continued)*	450						
40		Bottom of borehole at 40.0 feet.			67	6-6-7 (17)			

N_{60} = (Em/60)Nm N_{60} - Corrected N value for standard 60% SPT efficiency; Em - Measured hammer efficiency in percent; Nm - Observed N-value; (1) = Assumed, (2) = Actual

Coordinate System: **Coordinate Zone:** **Coordinate Proj. Factor:**
Coordinate Datum: **Coordinate Units:** U.S. Survey Feet

* Persons using this information are cautioned that the materials shown are determined by the equipment noted and accuracy of the "log of materials" is limited thereby and by judgement of the operator. THIS INFORMATION IS FOR DESIGN PURPOSES ONLY.

LETTER BOREHOLE - MODOT_20151118.GDT - 12/27/24 13:14 - G:\PRCJECT FILES\2024\MG24029 I-270 GAP FROM ROUTE 367 TO LILAC AVENUE\FIELD DATA\LILAC AVE\MODOT I-270 - LILAC AVE.GPJ

LETTER BOREHOLE - MODOT_20151118.GDT - 12/27/24 13:14 - G:\PRCJECT FILES\2024\MG24029 I-270 GAP FROM ROUTE 367 TO LILAC AVENUE\FIELD DATA\LILAC AVE\MODOT I-270 - LILAC AVE.GPJ

THIS SHEET HAS BEEN SIGNED, SEALED AND DATED ELECTRONICALLY

DATE PREPARED 3/26/2026
ROUTE I-270 STATE MO
DISTRICT BR SHEET NO. 4
COUNTY ST. LOUIS
JOB NO. J6I3020D
CONTRACT ID.
PROJECT NO.
BRIDGE NO. A9501

DESCRIPTION | DATE | REVISION

MISSOURI HIGHWAYS AND TRANSPORTATION COMMISSION
105 WEST CAPITOL
JEFFERSON CITY, MO 65102
1-888-ASK-MODOT (1-888-275-6636)

HDR Engineering, Inc.
1001 Highlands Plaza Drive
Suite 200
St. Louis, MO 63110-1337
314-425-8300
Certificate of Authority: 000856

BORING DATA

Note: For locations of borings, see Sheet No. 1.

Detailed October 2025
Checked October 2025

Note: This drawing is not to scale. Follow dimensions.

c:\pwworking\central01\d4975492\B_A9501_004_J6I3020D.dgn 2:24:05 PM 3/26/2026

Missouri Department of Transportation
Construction and Materials

BORING NO. A9398-102/A9501-2
Page 1 of 2

Job No.: MG24029 **County:** St. Louis **Route:** Lilac Avenue
Design: **Skew:** **Location:** St. Louis County, Missour
Bent: **Logged By:** J. Stauffer **Operator:** S. Conrad
Station: **Northing:** 1068409 **Date of Work:** 06/25/24-07/16/24
Offset: **Easting:** 904871.5 **Depth to Water:**
Elevation: 487.0 **Requested Northing:** **Depth Hole Open:**
Requested Station: **Requested Easting:** **Time Change:**
Requested Offset: **Equipment:** CME 55LC ,Split-Spoon Sampler, NQ
Requested Elevation: **Location Note:**
Drill No.: UES **Hammer Efficiency:** 79% **Drilling Method:** Mud Rotary

Depth (ft)	Graphic	Description	Elevation (ft)	Sample Type	REC % (RQD %)	Blow Counts (N_{60})	Shear Data	Field Tests	Index Tests
0		0.0-0.3' TOPSOIL (3")							
		0.3-6.0' FILL: Brown, lean CLAY (CL), with sand	485						
5				X	56	2-3-3 (8)		PP = 1.00 tsf	MC = 17.1%
		6.0-37.0' Brown, SAND (SP), fine to medium grained, medium dense	480						
10				X	89	3-4-4 (11)			MC = 11.0%
			475						
15		15.0' - mud rotary drilling below 15 ft.		X	83	3-4-4 (11)			MC = 9.8%
			470						
20				X	61	4-6-7 (17)			
		22.0' - trace gravel below 22 ft.	465						
25				X	50	5-5-6 (14)			
			460						
30				X	44	4-4-7 (14)			
			455						
35				X	72	4 4 6 (13)			

N_{60} = (Em/60)Nm N_{60} - Corrected N value for standard 60% SPT efficiency; Em - Measured hammer efficiency in percent; Nm - Observed N-value; (1) = Assumed, (2) = Actual

Coordinate System: **Coordinate Zone:** **Coordinate Proj. Factor:**
Coordinate Datum: **Coordinate Units:** U.S. Survey Feet

* Persons using this information are cautioned that the materials shown are determined by the equipment noted and accuracy of the "log of materials" is limited thereby and by judgement of the operator. THIS INFORMATION IS FOR DESIGN PURPOSES ONLY.

(Continued Next Page)

Missouri Department of Transportation
Construction and Materials

BORING NO. A9398-102/A9501-2
Page 2 of 2

Job No.: MG24029 **County:** St. Louis **Route:** Lilac Avenue
Design: **Skew:** **Location:** St. Louis County, Missouri
Bent: **Logged By:** J. Stauffer **Operator:** S. Conrad
Station: **Northing:** 1068409 **Date of Work:** 06/25/24-07/16/24
Offset: **Easting:** 904871.5 **Depth to Water:**
Elevation: 487.0 **Requested Northing:** **Depth Hole Open:**
Requested Station: **Requested Easting:** **Time Change:**
Requested Offset: **Equipment:** CME 55LC ,Split-Spoon Sampler, NQ
Requested Elevation: **Location Note:**
Drill No.: UES **Hammer Efficiency:** 79% **Drilling Method:** Mud Rotary

Depth (ft)	Graphic	Description	Elevation (ft)	Sample Type	REC % (RQD %)	Blow Counts (N_{60})	Shear Data	Field Tests	Index Tests
35		6.0-37.0' Brown, SAND (SP), fine to medium grained, medium dense *(continued)*							
			450						
40		37.0-49.0' Brown, SAND (SW), fine to mecium grained, with gravel		X	56	8-7-6 (17)			
			445						
45				X	50	7-7-6 (17)			
			440						
50		49.0-52.0' Brown, fat CLAY (CH), trace sand		X	83	9-7-4 (14)		PP = 1.50 tsf	MC = 20.1%
		52.0-57.5' Grey, weathered SHALE	435						
55				X	0	50/0.4'			
			430						
60		57.5-67.5' Grey, SHALE, moderately weathered, soft, moderately to highly fractured, aphanitic				25 (0)			
			425			40 (23)			
65									
			420			89 (83)			
		Refusal at 54.0 feet. Bottom of borehole at 67.5 feet.							

N_{60} = (Em/60)Nm N_{60} - Corrected N value for standard 60% SPT efficiency; Em - Measured hammer efficiency in percent; Nm - Observed N-value; (1) = Assumed, (2) = Actual

Coordinate System: **Coordinate Zone:** **Coordinate Proj. Factor:**
Coordinate Datum: **Coordinate Units:** U.S. Survey Feet

* Persons using this information are cautioned that the materials shown are determined by the equipment noted and accuracy of the "log of materials" is limited thereby and by judgement of the operator. THIS INFORMATION IS FOR DESIGN PURPOSES ONLY.

LETTER BOREHOLE - MODOT_20151118.GDT - 12/27/24 13:14 - G:\PRCJECT FILES\2024\MG24029 I-270 GAP FROM ROUTE 367 TO LILAC AVENUE\FIELD DATA\LILAC AVE\MODOT I-270 - LILAC AVE.GPJ

STATE OF MISSOURI
RYAN DAVID SHAW
NUMBER PE-2017000396
PROFESSIONAL ENGINEER
THIS SHEET HAS BEEN SIGNED, SEALED AND DATED ELECTRONICALLY

DATE PREPARED 3/26/2026
ROUTE I-270 | STATE MO
DISTRICT BR | SHEET NO. 5
COUNTY ST. LOUIS
JOB NO. J6I3020D
CONTRACT ID.
PROJECT NO.
BRIDGE NO. A9501

DESCRIPTION | DATE

MISSOURI HIGHWAYS AND TRANSPORTATION COMMISSION
105 WEST CAPITOL
JEFFERSON CITY, MO 65102
1-888-ASK-MODOT (1-888-275-6636)

HDR Engineering, Inc.
1001 Highlands Plaza Drive
Suite 200
St. Louis, MO 63110-1337
314-425-8300
Certificate of Authority: 000856

BORING DATA

Note: For locations of borings, see Sheet No. 1.

Detailed October 2025
Checked October 2025

Note: This drawing is not to scale. Follow dimensions.

c:\pwworking\central01\d4975492\B_A9501_005_J6I3020D.dgn 2:25:22 PM 3/26/2026

Missouri Department of Transportation
Construction and Materials

BORING NO. A9501-3
Page 1 of 2

Job No.: MG24029 **County:** St. Louis **Route:** Lilac Avenue
Design: **Skew:** **Location:** St. Louis County, Missour
Bent: **Logged By:** J. Stauffer **Operator:** S. Conrad
Station: **Northing:** 1068410 **Date of Work:** 06/19/24-06/20/24
Offset: **Easting:** 904913.3 **Depth to Water:**
Elevation: 486.5 **Requested Northing:** **Depth Hole Open:**
Requested Station: **Requested Easting:** **Time Change:**
Requested Offset: **Equipment:** CME 55LC ,Split-Spoon Sampler
Requested Elevation: **Location Note:**
Drill No.: UES **Hammer Efficiency:** 79% **Drilling Method:** Mud Rotary

Depth (ft)	Graphic	Description	Elevation (ft)	Sample Type	REC % (RQD %)	Blow Counts (N_{60})	Shear Data	Field Tests	Index Tests
0		0.0-2.0' FILL: Brown, lean CLAY (CL), trace gravel	485						
		2.0-2.5' CONCRETE (6")							
5		2.5-7.0' FILL: Brown, lean CLAY (CL), trace sand and gravel			67	2-2-2 (5)		PP = 1.00 tsf	MC = 22.3%
			480						
		7.0-40.0' Brown, SAND (SP), fine to medium grained, loose to medium dense							
10					61	7-3-3 (8)			MC = 11.0%
			475						
15		15.0' - mud rotary drilling below 15 ft.			100	4-4-4 (11)			MC = 9.6%
			470						
20					0	4-6-6 (16)			
			465						
25		23.5' - trace gravel below 23.5 ft.			56	6-6-6 (16)			
			460						
30					50	6-7-8 (20)			
			455						
35					50	4 5 6 (14)			

N_{60} = (Em/60)Nm N_{60} - Corrected N value for standard 60% SPT efficiency; Em - Measured hammer efficiency in percent; Nm - Observed N-value; (1) = Assumed, (2) = Actual

Coordinate System: **Coordinate Zone:** **Coordinate Proj. Factor:**
Coordinate Datum: **Coordinate Units:** U.S. Survey Feet

* Persons using this information are cautioned that the materials shown are determined by the equipment noted and accuracy of the "log of materials" is limited thereby and by judgement of the operator. THIS INFORMATION IS FOR DESIGN PURPOSES ONLY.

(Continued Next Page)

Missouri Department of Transportation
Construction and Materials

BORING NO. A9501-3
Page 2 of 2

Job No.: MG24029 **County:** St. Louis **Route:** Lilac Avenue
Design: **Skew:** **Location:** St. Louis County, Missouri
Bent: **Logged By:** J. Stauffer **Operator:** S. Conrad
Station: **Northing:** 1068410 **Date of Work:** 06/19/24-06/20/24
Offset: **Easting:** 904913.3 **Depth to Water:**
Elevation: 486.5 **Requested Northing:** **Depth Hole Open:**
Requested Station: **Requested Easting:** **Time Change:**
Requested Offset: **Equipment:** CME 55LC ,Split-Spoon Sampler
Requested Elevation: **Location Note:**
Drill No.: UES **Hammer Efficiency:** 79% **Drilling Method:** Mud Rotary

Depth (ft)	Graphic	Description	Elevation (ft)	Sample Type	REC % (RQD %)	Blow Counts (N_{60})	Shear Data	Field Tests	Index Tests
35		7.0-40.0' Brown, SAND (SP), fine to medium grained, loose to medium dense *(continued)*	450						
40					33	7-9-8 (22)			
		Bottom of borehole at 40.0 feet.							

N_{60} = (Em/60)Nm N_{60} - Corrected N value for standard 60% SPT efficiency; Em - Measured hammer efficiency in percent; Nm - Observed N-value; (1) = Assumed, (2) = Actual

Coordinate System: **Coordinate Zone:** **Coordinate Proj. Factor:**
Coordinate Datum: **Coordinate Units:** U.S. Survey Feet

* Persons using this information are cautioned that the materials shown are determined by the equipment noted and accuracy of the "log of materials" is limited thereby and by judgement of the operator. THIS INFORMATION IS FOR DESIGN PURPOSES ONLY.

LETTER BOREHOLE - MODOT_20151118.GDT - 12/27/24 13:14 - G:\PRCJECT FILES\2024\MG24029 I-270 GAP FROM ROUTE 367 TO LILAC AVENUE\FIELD DATA\LILAC AVE\MODOT I-270 - LILAC AVE.GPJ

STATE OF MISSOURI
RYAN DAVID SHAW
NUMBER PE-2017000396
PROFESSIONAL ENGINEER
THIS SHEET HAS BEEN SIGNED, SEALED AND DATED ELECTRONICALLY

DATE PREPARED 3/26/2026
ROUTE I-270 | STATE MO
DISTRICT BR | SHEET NO. 6
COUNTY ST. LOUIS
JOB NO. J6I3020D
CONTRACT ID.
PROJECT NO.
BRIDGE NO. A9501

DESCRIPTION | DATE | REVISION

MISSOURI HIGHWAYS AND TRANSPORTATION COMMISSION
105 WEST CAPITOL
JEFFERSON CITY, MO 65102
1-888-ASK-MODOT (1-888-275-6636)

HDR Engineering, Inc.
1001 Highlands Plaza Drive
Suite 200
St. Louis, MO 63110-1337
314-425-8300
Certificate of Authority: 000856

BORING DATA

Note: For locations of borings, see Sheet No. 1.

Note: This drawing is not to scale. Follow dimensions.

Detailed October 2025
Checked October 2025

c:\pwworking\central01\d4975492\B_A9501_006_J6I3020D.dgn 2:26:38 PM 3/26/2026

Missouri Department of Transportation
Construction and Materials

BORING NO. A9398-101/A9501-4 Alt.
Page 1 of 2

Job No.: MG24029 **County:** St. Louis **Route:** Lilac Avenue
Design: **Skew:** **Location:** St. Louis County, Missour
Bent: **Logged By:** B. Nepal **Operator:** G. Shetley
Station: **Northing:** 1068396 **Date of Work:** 06/27/24-07/02/24
Offset: **Easting:** 904949.5 **Depth to Water:**
Elevation: 486.9 **Requested Northing:** **Depth Hole Open:**
Requested Station: **Requested Easting:** **Time Change:**
Requested Offset: **Equipment:** CME 750Y ,Split-Spoon Sampler, Shelby Tube, NQ
Requested Elevation: **Location Note:**
Drill No.: UES **Hammer Efficiency:** 95% **Drilling Method:** Mud Rotary

Depth (ft)	Graphic	Description	Elevation (ft)	Sample Type	REC % (RQD %)	Blow Counts (N_{60})	Shear Data	Field Tests	Index Tests
0		0.0-0.5' ASPHALT (6")							
		0.5-1.5' CONCRETE (12")	485						
		1.5-4.0' Brown, SAND (SP), fine to medium grained, trace clay			100				MC = 10.0%
5		4.0-37.0' Brown, SAND (SP), fine to coarse grained, very loose to medium dense, trace gravel			100				MC = 13.6%
			480		100				
10					94	3-2-2 (6)			MC = 8.1%
		11.0' - 2.0% passing No. 200 sieve	475		78	1-2-3 (8)			MC = 15.7%
15					100	2-2-2 (6)			MC = 16.0%
			470		100	2-4-3 (11)			MC = 17.7%
20		20.0' - mud rotary drilling below 20 ft.			100	3-3-3 (10)			MC = 10.2%
			465						
25					56	5-5-6 (17)			
			460						
30					50	4-5-5 (16)			
			455						
35		33.5' - 4.9% passing No. 200 sieve			56	5 4 4 (13)			

N_{60} = (Em/60)Nm N_{60} - Corrected N value for standard 60% SPT efficiency; Em - Measured hammer efficiency in percent; Nm - Observed N-value; (1) = Assumed, (2) = Actual

Coordinate System: **Coordinate Zone:** **Coordinate Proj. Factor:**
Coordinate Datum: **Coordinate Units:** U.S. Survey Feet

* Persons using this information are cautioned that the materials shown are determined by the equipment noted and accuracy of the "log of materials" is limited thereby and by judgement of the operator. THIS INFORMATION IS FOR DESIGN PURPOSES ONLY.

(Continued Next Page)

Missouri Department of Transportation
Construction and Materials

BORING NO. A9398-101/A9501-4 Alt.
Page 2 of 2

Job No.: MG24029 **County:** St. Louis **Route:** Lilac Avenue
Design: **Skew:** **Location:** St. Louis County, Missouri
Bent: **Logged By:** B. Nepal **Operator:** G. Shetley
Station: **Northing:** 1068396 **Date of Work:** 06/27/24-07/02/24
Offset: **Easting:** 904949.5 **Depth to Water:**
Elevation: 486.9 **Requested Northing:** **Depth Hole Open:**
Requested Station: **Requested Easting:** **Time Change:**
Requested Offset: **Equipment:** CME 750Y ,Split-Spoon Sampler, Shelby Tube, NQ
Requested Elevation: **Location Note:**
Drill No.: UES **Hammer Efficiency:** 95% **Drilling Method:** Mud Rotary

Depth (ft)	Graphic	Description	Elevation (ft)	Sample Type	REC % (RQD %)	Blow Counts (N_{60})	Shear Data	Field Tests	Index Tests
35									
			450						
		37.0-52.0' Brown, SAND (SW), fine to coarse grained, medium dense, with gravel							
40					44	7-6-5 (17)			
			445						
45		43.5' - 2.4% passing No. 200 sieve			33	4-6-8 (22)			
			440						
50					33	7-7-6 (21)			
			435						
		52.0-55.0' Grey, weathered SHALE							
55					100	23-49-50/0.2'		PP >4.50 tsf	MC = 21.6%
		55.0-65.0' Grey, SHALE, moderately to highly weathered, soft, very finely crystalline to aphanitic, moderately to highly fractured 56.3' - compressive strength = 11 psi 57.0' - compressive strength = 39 psi							
60			430		87 (28)				
			425						
65		Refusal at 54.7 feet. Bottom of borehole at 65.0 feet.			100 (75)				

N_{60} = (Em/60)Nm N_{60} - Corrected N value for standard 60% SPT efficiency; Em - Measured hammer efficiency in percent; Nm - Observed N-value; (1) = Assumed, (2) = Actual

Coordinate System: **Coordinate Zone:** **Coordinate Proj. Factor:**
Coordinate Datum: **Coordinate Units:** U.S. Survey Feet

* Persons using this information are cautioned that the materials shown are determined by the equipment noted and accuracy of the "log of materials" is limited thereby and by judgement of the operator. THIS INFORMATION IS FOR DESIGN PURPOSES ONLY.

LETTER BOREHOLE - MODOT_20151118.GDT - 12/27/24 13:14 - G:\PROJECT FILES\20241\MG24029 I-270 GAP FROM ROUTE 367 TO LILAC AVENUE\FIELD DATA\LILAC AVE\MODOT I-270 - LILAC AVE.GPJ

STATE OF MISSOURI
RYAN DAVID SHAW
NUMBER PE-2017000396
PROFESSIONAL ENGINEER
THIS SHEET HAS BEEN SIGNED, SEALED AND DATED ELECTRONICALLY

DATE PREPARED 3/26/2026
ROUTE I-270 | STATE MO
DISTRICT BR | SHEET NO. 7
COUNTY ST. LOUIS
JOB NO. J6I3020D
CONTRACT ID.
PROJECT NO.
BRIDGE NO. A9501

DESCRIPTION | DATE

MISSOURI HIGHWAYS AND TRANSPORTATION COMMISSION
105 WEST CAPITOL
JEFFERSON CITY, MO 65102
1-888-ASK-MODOT (1-888-275-6636)

HDR Engineering, Inc.
1001 Highlands Plaza Drive
Suite 200
St. Louis, MO 63110-1337
314-425-8300
Certificate of Authority: 000856

BORING DATA

Note: For locations of borings, see Sheet No. 1.

Note: This drawing is not to scale. Follow dimensions.

Detailed October 2025
Checked October 2025

c:\pwworking\central01\d4975492\B_A9501_007_J6I3020D.dgn 2:27:53 PM 3/26/2026

Missouri Department of Transportation
Construction and Materials

BORING NO. A9501-5
Page 1 of 2

Job No.: MG24029 **County:** St. Louis **Route:** Lilac Avenue
Design: **Skew:** **Location:** St. Louis County, Missour
Bent: **Logged By:** B. Nepal **Operator:** R. Rose
Station: **Northing:** 1068415 **Date of Work:** 07/02/24-07/03/24
Offset: **Easting:** 905008.7 **Depth to Water:**
Elevation: 486.7 **Requested Northing:** **Depth Hole Open:**
Requested Station: **Requested Easting:** **Time Change:**
Requested Offset: **Equipment:** CME 750Y ,Split-Spoon Sampler, Shelby Tube
Requested Elevation: **Location Note:**
Drill No.: UES **Hammer Efficiency:** 95% **Drilling Method:** Mud Rotary

Depth (ft)	Graphic	Description	Elevation (ft)	Sample Type	REC % (RQD %)	Blow Counts (N_{60})	Shear Data	Field Tests	Index Tests
0		0.0-3.0' FILL: Brown, lean CLAY (CL)	485						
5		3.0-40.0' Brown, SAND (SP), fine to medium grained, loose to medium dense			100				MC = 11.2%
10			480		78	1-2-3 (8)			MC = 6.5%
15			475		44	3-3-3 (10)			MC = 3.6%
20		20.0' - mud rotary drilling below 20 ft.	470		78	2-2-3 (8)			MC = 4.1%
25		23.5' - trace gravel below 23.5 ft.	465		67	6-6-9 (24)			
30			460		56	4-4-3 (11)			
35			455		67	5 4 5 (14)			

N_{60} = (Em/60)Nm N_{60} - Corrected N value for standard 60% SPT efficiency; Em - Measured hammer efficiency in percent; Nm - Observed N-value; (1) = Assumed, (2) = Actual

Coordinate System: **Coordinate Zone:** **Coordinate Proj. Factor:**
Coordinate Datum: **Coordinate Units:** U.S. Survey Feet

* Persons using this information are cautioned that the materials shown are determined by the equipment noted and accuracy of the "log of materials" is limited thereby and by judgement of the operator. THIS INFORMATION IS FOR DESIGN PURPOSES ONLY.

(Continued Next Page)

Missouri Department of Transportation
Construction and Materials

BORING NO. A9501-5
Page 2 of 2

Job No.: MG24029 **County:** St. Louis **Route:** Lilac Avenue
Design: **Skew:** **Location:** St. Louis County, Missouri
Bent: **Logged By:** B. Nepal **Operator:** R. Rose
Station: **Northing:** 1068415 **Date of Work:** 07/02/24-07/03/24
Offset: **Easting:** 905008.7 **Depth to Water:**
Elevation: 486.7 **Requested Northing:** **Depth Hole Open:**
Requested Station: **Requested Easting:** **Time Change:**
Requested Offset: **Equipment:** CME 750Y ,Split-Spoon Sampler, Shelby Tube
Requested Elevation: **Location Note:**
Drill No.: UES **Hammer Efficiency:** 95% **Drilling Method:** Mud Rotary

Depth (ft)	Graphic	Description	Elevation (ft)	Sample Type	REC % (RQD %)	Blow Counts (N_{60})	Shear Data	Field Tests	Index Tests
35		3.0-40.0' Brown, SAND (SP), fine to medium grained, loose to medium dense *(continued)*	450						
40		Bottom of borehole at 40.0 feet.			56	8-5-6 (17)			

N_{60} = (Em/60)Nm N_{60} - Corrected N value for standard 60% SPT efficiency; Em - Measured hammer efficiency in percent; Nm - Observed N-value; (1) = Assumed, (2) = Actual

Coordinate System: **Coordinate Zone:** **Coordinate Proj. Factor:**
Coordinate Datum: **Coordinate Units:** U.S. Survey Feet

* Persons using this information are cautioned that the materials shown are determined by the equipment noted and accuracy of the "log of materials" is limited thereby and by judgement of the operator. THIS INFORMATION IS FOR DESIGN PURPOSES ONLY.

LETTER BOREHOLE - MODOT_20151118.GDT - 12/27/24 13:14 - G:\PRCJECT FILES\2024\MG24029 I-270 GAP FROM ROUTE 367 TO LILAC AVENUE\FIELD DATA\LILAC AVE\MODOT I-270 - LILAC AVE.GPJ

STATE OF MISSOURI
RYAN DAVID SHAW
NUMBER PE-2017000396
PROFESSIONAL ENGINEER
THIS SHEET HAS BEEN SIGNED, SEALED AND DATED ELECTRONICALLY

DATE PREPARED 3/26/2026
ROUTE I-270 | STATE MO
DISTRICT BR | SHEET NO. 8
COUNTY ST. LOUIS
JOB NO. J6I3020D
CONTRACT ID.
PROJECT NO.
BRIDGE NO. A9501

DESCRIPTION | DATE

MISSOURI HIGHWAYS AND TRANSPORTATION COMMISSION
105 WEST CAPITOL
JEFFERSON CITY, MO 65102
1-888-ASK-MODOT (1-888-275-6636)

HDR Engineering, Inc.
1001 Highlands Plaza Drive
Suite 200
St. Louis, MO 63110-1337
314-425-8300
Certificate of Authority: 000856

BORING DATA

Note: For locations of borings, see Sheet No. 1.

Note: This drawing is not to scale. Follow dimensions.

Detailed October 2025
Checked October 2025

c:\pwworking\central01\d4975492\B_A9501_008_J6I3020D.dgn 2:29:13 PM 3/26/2026

DESIGN DESIGNATION

I-270 EASTBOUND
A.A.D.T. - 2022 = 26,600
A.A.D.T. - 2046 = 29,400
D.H.V. = 10%
T = 18%
V = 60 M.P.H.
FUNCTIONAL CLASSIFICATION - INTERSTATE HIGHWAY

I-270 WESTBOUND
A.A.D.T. - 2022 = 25,700
A.A.D.T. - 2046 = 28,400
D.H.V. = 10%
T = 18%
V = 60 M.P.H.
FUNCTIONAL CLASSIFICATION - INTERSTATE HIGHWAY

NO NEW RIGHT-OF-WAY WILL BE ACQUIRED ON THIS PROJECT.

CONVENTIONAL SYMBOLS
(USED IN PLANS)

	EXISTING	NEW
BUILDINGS AND STRUCTURES		
GUARD RAIL		
GUARD CABLE		
CONCRETE RIGHT-OF-WAY MARKER		
STEEL RIGHT-OF-WAY MARKER		
LOCATION SURVEY MARKER		
UTILITIES		
FIBER OPTICS	-FO-	FO
CABLE TV	-CATV-	CATV
OVERHEAD TELEPHONE	-OT-	OT
UNDERGROUND TELEPHONE	-UT-	UT
OVERHEAD POWER	-OE-	OE
UNDERGROUND POWER	-UE-	UE
SANITARY SEWER	-S-	S
STORM SEWER	-SS-	SS
GAS	-G-	G
WATER	-W-	W
ITS EQUIPMENT		
MANHOLE	SAN	
FIRE HYDRANT	HYD	
WATER VALVE	WV	
WATER METER	WM	
DROP INLET		
DITCH BLOCK		
GROUND MOUNTED SIGN	SIGN	
LIGHT POLE		
H-FRAME POWER POLE		
TELEPHONE PEDESTAL	PED	
FENCE		
CHAIN LINK	-V-	
WOVEN WIRE	-X-	
GATE POST		
BENCHMARK	BM	

NOTE: DASHED OR OPEN SYMBOLS INDICATE EXISTING FEATURES

MISSOURI HIGHWAYS AND TRANSPORTATION COMMISSION
FINAL PLANS FOR PROPOSED
INTERSTATE 270
ST. LOUIS COUNTY



KEY MAP
LOCATION OF ST. LOUIS COUNTY

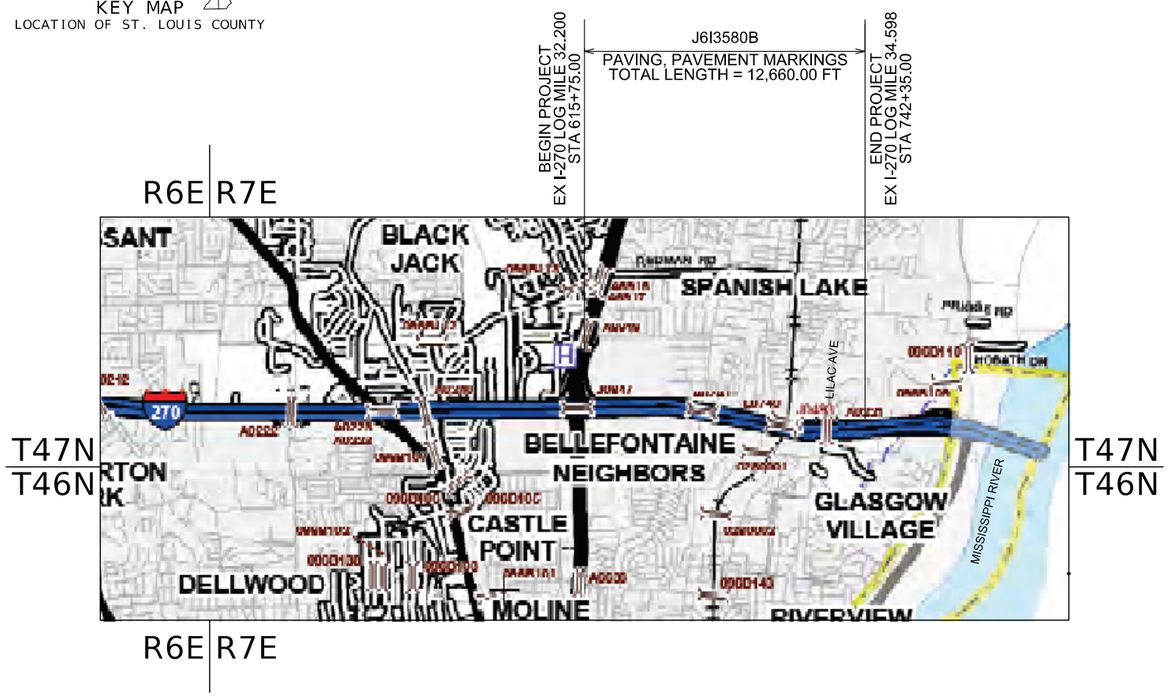

NOT TO SCALE

THE EXISTENCE AND APPROXIMATE LOCATION OF UTILITY FACILITIES KNOWN TO EXIST, AS SHOWN ON THE PLANS, ARE BASED ON THE BEST INFORMATION AVAILABLE TO THE COMMISSION AT THIS TIME. THIS INFORMATION IS PROVIDED BY THE COMMISSION "AS-IS" AND THE COMMISSION EXPRESSLY DISCLAIMS ANY REPRESENTATION OR WARRANTY AS TO THE COMPLETENESS, ACCURACY, OR SUITABILITY OF THE INFORMATION FOR ANY USE. RELIANCE UPON THIS INFORMATION IS DONE AT THE RISK AND PERIL OF THE USER, AND THE COMMISSION SHALL NOT BE LIABLE FOR ANY DAMAGES THAT MAY ARISE FROM ANY ERROR IN THE INFORMATION. IT IS, THEREFORE, THE RESPONSIBILITY OF THE CONTRACTOR TO VERIFY THE EXISTENCE, LOCATION AND STATUS OF ANY FACILITY. SUCH VERIFICATION INCLUDES DIRECT CONTACT WITH THE LISTED UTILITIES.

MSD# 25MSD-00035
BASE MAPS 10E & 10F

INDEX OF SHEETS

DESCRIPTION	SHEET NUMBER
TITLE SHEET	1
TYPICAL SECTIONS (TS) (10 SHEETS)	2
QUANTITIES (QU) (3 SHEETS)	3
PLAN (PL)	4 - 13
REFERENCE POINTS (RP)	14
COORDINATE POINTS (CP)	15 - 16
TRAFFIC CONTROL (TC)	17 - 25
PAVEMENT MARKINGS (PM)	26 - 36

LENGTH OF PROJECT

BEGINNING OF PROJECT	STA 615+75.00
END OF PROJECT	STA 742+35.00
APPARENT LENGTH	12,660.00 FEET
EQUATIONS AND EXCEPTIONS: STA 642+17.06 R2 ℄ EXIST. I-270 BK = STA 640+97.00 R3 ℄ EXIST. I-270 AH	- 120.06 FEET
TOTAL CORRECTIONS	- 120.06 FEET
NET LENGTH OF PROJECT	12,539.94 FEET
STATE LENGTH	2.375 MILES
FOR INFORMATION ONLY ESTIMATED DISTURBED ACRES	0.0 ACRES

STATE OF MISSOURI
EUGENE LOUIS KUELKER JR.
NUMBER PE-2010009912
PROFESSIONAL ENGINEER

THIS SHEET HAS BEEN SIGNED, SEALED, AND DATED ELECTRONICALLY.

IF A SEAL IS PRESENT ON THIS SHEET IT HAS BEEN ELECTRONICALLY SEALED AND DATED.

DATE PREPARED: 5/4/2026
ROUTE: I-270 | STATE: MO
DISTRICT: SL | SHEET NO.: 1
COUNTY: ST. LOUIS
JOB NO.: J6I3580B
CONTRACT ID.:
PROJECT NO.:
BRIDGE NO.:

DESCRIPTION	DATE

MISSOURI HIGHWAYS AND TRANSPORTATION COMMISSION

MoDOT
105 WEST CAPITOL
JEFFERSON CITY, MO 65102
1-888-ASK-MODOT (1-888-275-6636)

HDR Engineering, Inc.
1001 Highlands Plaza Drive
Suite 200
St. Louis, MO 63110-1337
314-425-8300
Certificate of Authority: 000856

* EX. INSIDE SHOULDER WIDTH (EASTBOUND & WESTBOUND)	
WIDTH	STATIONS
5'	615+75.00 TO 640+37.48
5' TO 4.5'	654+27.40 TO 652+89.92
4.5'	652+89.92 TO 654+70.00
4.5'	667+20.00 TO 694+81.73

** EX. OUTSIDE SHOULDER WIDTH (EASTBOUND)	
WIDTH	STATIONS
12'	615+75.00 TO 620+52.58
10'	620+52.58 TO 640+37.48
12'	654+27.40 TO 654+70.00
12'	667+20.00 TO 667+65.00
10'	667+65.00 TO 685+98.00

** EX. OUTSIDE SHOULDER WIDTH (WESTBOUND)	
WIDTH	STATIONS
10'	615+75.00 TO 620+52.58
12' TO 10'	620+52.58 TO 628+62.78
10'	628+62.78 TO 640+37.48
10'	654+27.40 TO 654+70.00
12'	667+20.00 TO 682+49.67
12' TO 10'	682+49.67 TO 685+98.00
10'	685+98.00 TO 694+81.73

*** EX. MGS GUARDRAIL (EASTBOUND)
STATIONS
640+62.22 TO 641+26.22
667+65.00 TO 680+20.47
685+79.64 TO 685+98.00

*** EX. MGS GUARDRAIL (WESTBOUND)
STATIONS
615+75.00 TO 617+81.70
620+95.91 TO 622+02.33
632+41.70 TO 633+88.60
654+27.40 TO 654+70.00
667+20.00 TO 676+14.80
679+03.99 TO 681+42.47
687+84.59 TO 694+81.73

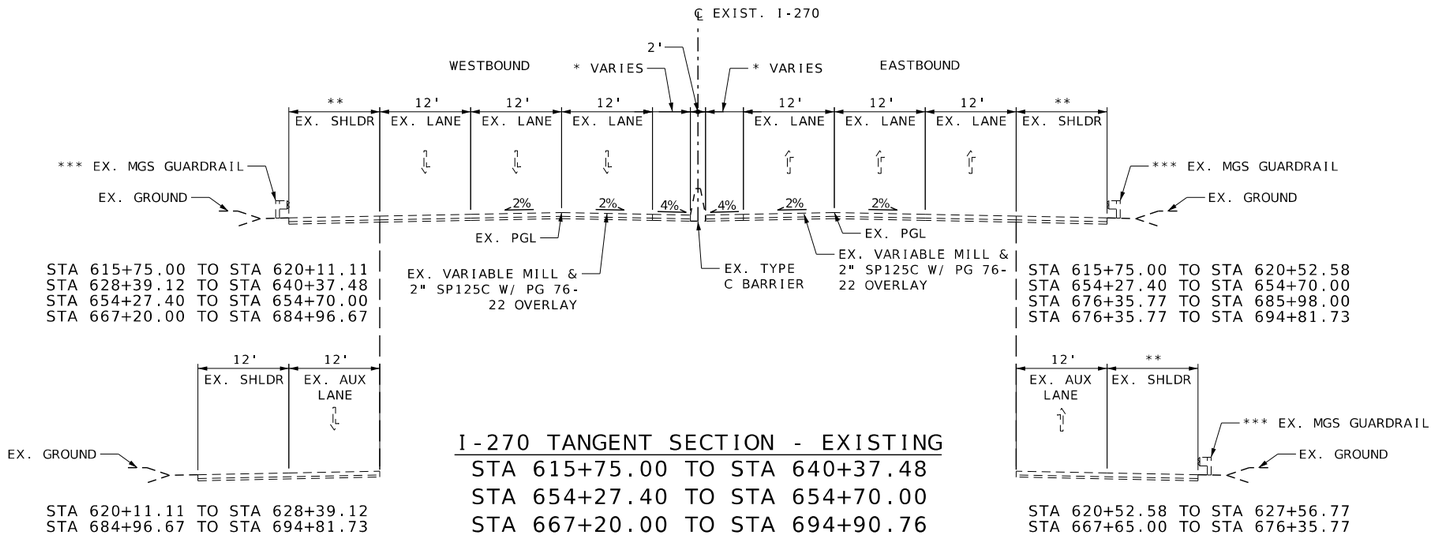

I-270 TANGENT SECTION - EXISTING
STA 615+75.00 TO STA 640+37.48
STA 654+27.40 TO STA 654+70.00
STA 667+20.00 TO STA 694+90.76

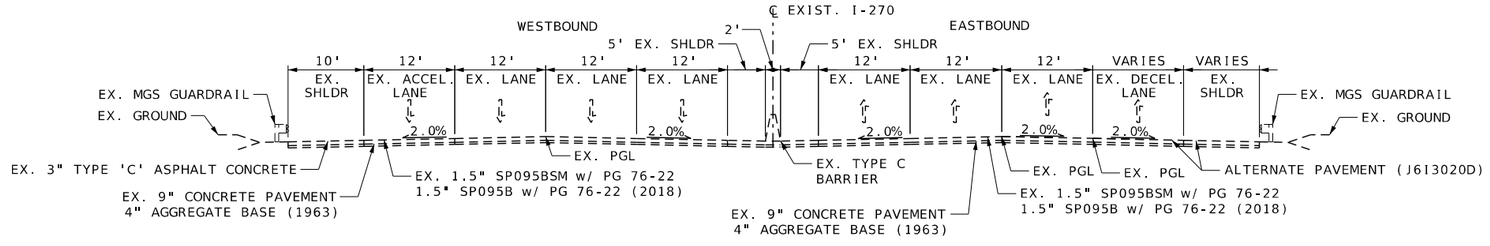

I-270 TANGENT SECTION - EXISTING
STA 696+50.29 TO STA 699+25.55

N.T.S. - FOLLOW DIMENSIONS

TYPICAL SECTIONS
SHEET 1 OF 10

STATE OF MISSOURI
EUGENE LOUIS KUEKER JR.
NUMBER PE-2010009912
PROFESSIONAL ENGINEER
THIS SHEET HAS BEEN SIGNED, SEALED, AND DATED ELECTRONICALLY.

DATE PREPARED 3/25/2026
ROUTE I-270 | STATE MO
DISTRICT SL | SHEET NO. 2
COUNTY ST. LOUIS
JOB NO. J6I3580B
CONTRACT ID.
PROJECT NO.
BRIDGE NO.

DESCRIPTION | DATE

IF A SEAL IS PRESENT ON THIS SHEET IT HAS BEEN ELECTRONICALLY SEALED AND DATED.

MISSOURI HIGHWAYS AND TRANSPORTATION COMMISSION
105 WEST CAPITOL
JEFFERSON CITY, MO 65102
1-888-ASK-MODOT (1-888-275-6636)

HDR Engineering, Inc.
1001 Highlands Plaza Drive
Suite 200
St. Louis, MO 63110-1337
314-425-8300
Certificate of Authority: 000856

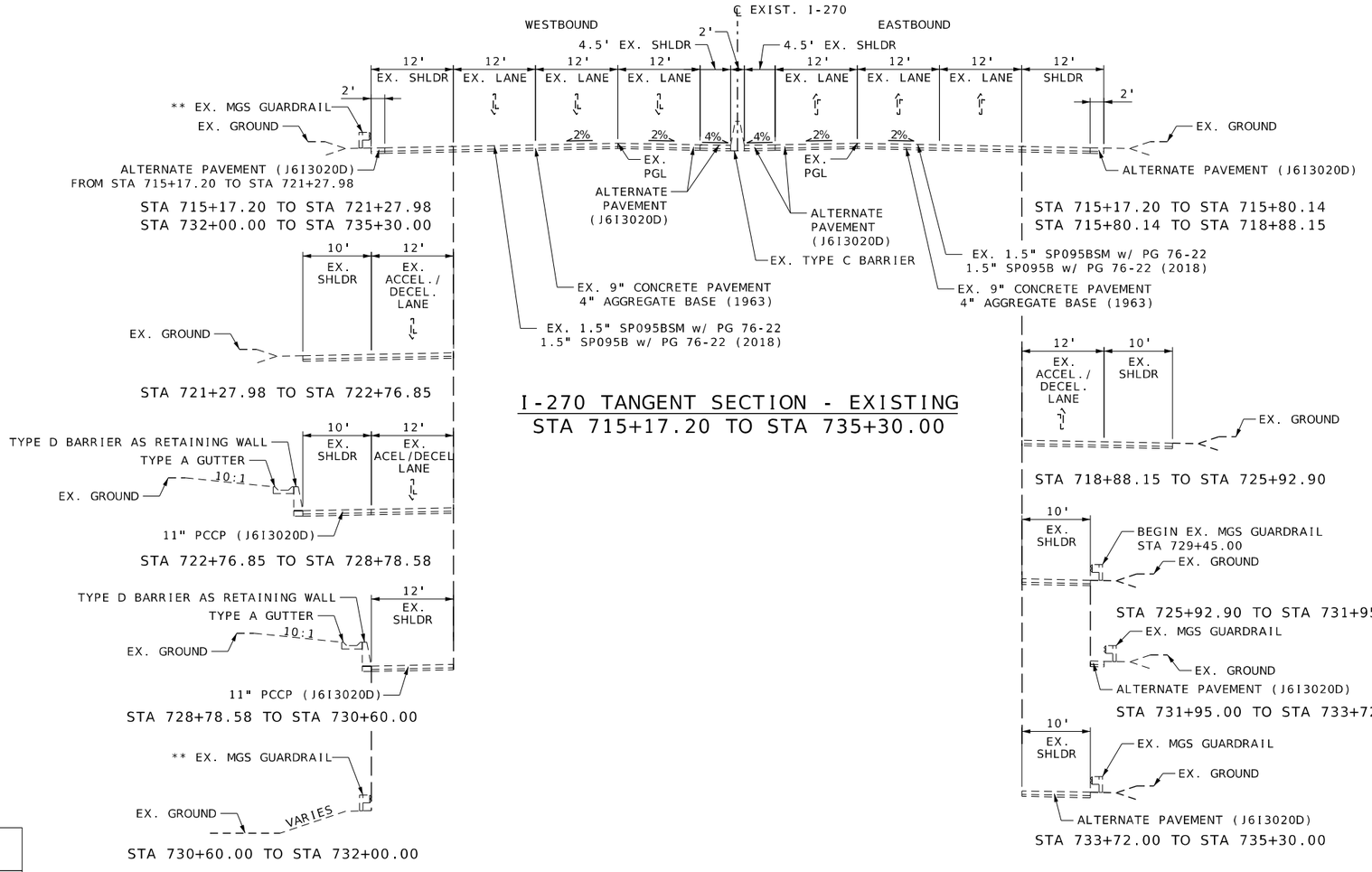

I-270 TANGENT SECTION - EXISTING
STA 715+17.20 TO STA 735+30.00

* EX. INSIDE SHOULDER WIDTH (EASTBOUND & WESTBOUND)	
WIDTH	STATIONS
4.5' TO 10'	735+30.00 TO 738+60.00

** EX. MGS GUARDRAIL (WESTBOUND)
STATIONS
730+60.00 TO 732+40.00
735+73.65 TO 738+60.00

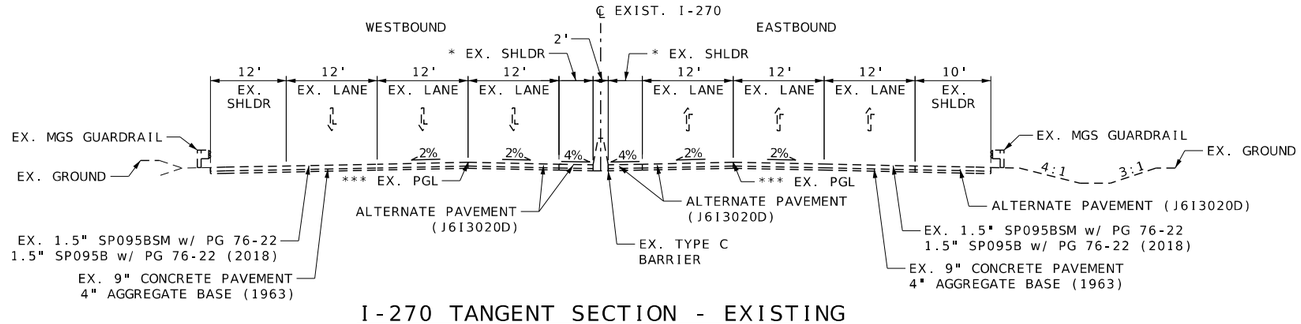

*** CROWN TRANSITION
FROM 17'-6" TO 23'-0"
FROM STA 738+30.00 TO
STA 738+60.00

I-270 TANGENT SECTION - EXISTING
STA 735+30.00 TO STA 738+60.00

N.T.S. - FOLLOW DIMENSIONS

TYPICAL SECTIONS
SHEET 2 OF 10

STATE OF MISSOURI
EUGENE LOUIS KUEKER JR.
NUMBER PE-2010009912
PROFESSIONAL ENGINEER
THIS SHEET HAS BEEN SIGNED, SEALED, AND DATED ELECTRONICALLY.

DATE PREPARED: 3/25/2026
ROUTE: I-270 | STATE: MO
DISTRICT: SL | SHEET NO.: 2
COUNTY: ST. LOUIS
JOB NO.: J6I3580B
CONTRACT ID.:
PROJECT NO.:
BRIDGE NO.:

DESCRIPTION | DATE

IF A SEAL IS PRESENT ON THIS SHEET IT HAS BEEN ELECTRONICALLY SEALED AND DATED.

MISSOURI HIGHWAYS AND TRANSPORTATION COMMISSION
105 WEST CAPITOL
JEFFERSON CITY, MO 65102
1-888-ASK-MODOT (1-888-275-6636)

HDR Engineering, Inc.
1001 Highlands Plaza Drive
Suite 200
St. Louis, MO 63110-1337
314-425-8300
Certificate of Authority: 000856

* EX. INSIDE SHOULDER WIDTH (EASTBOUND & WESTBOUND)	
WIDTH	STATIONS
5'	640+37.48 TO 652+59.92
5' TO 4.5'	652+59.92 TO 652+89.92
4.5'	652+89.92 TO 654+27.40
4' TO 4.5'	705+06.00 TO 705+36.00
4.5'	705+36.00 TO 711+28.00
VARIES	711+28.00 TO 713+63.00
4.5'	713+63.00 TO 715+17.20

** EX. MGS GUARDRAIL (EASTBOUND)
STATIONS
703+59.31 TO 705+56.88
706+10.00 TO 713+38.74

** EX. MGS GUARDRAIL (WESTBOUND)
STATIONS
649+31.50 TO 654+16.00
711+51.00 TO 715+84.73

**** EX. BARRIER (EASTBOUND & WESTBOUND)	
TYPE	STATIONS
TYPE C TO MODIFIED TYPE C	711+28.00 TO 712+15.02
MODIFIED TYPE C	712+15.02 TO 712+88.02
MODIFIED TYPE C TO TYPE C	712+88.02 TO 713+63.00

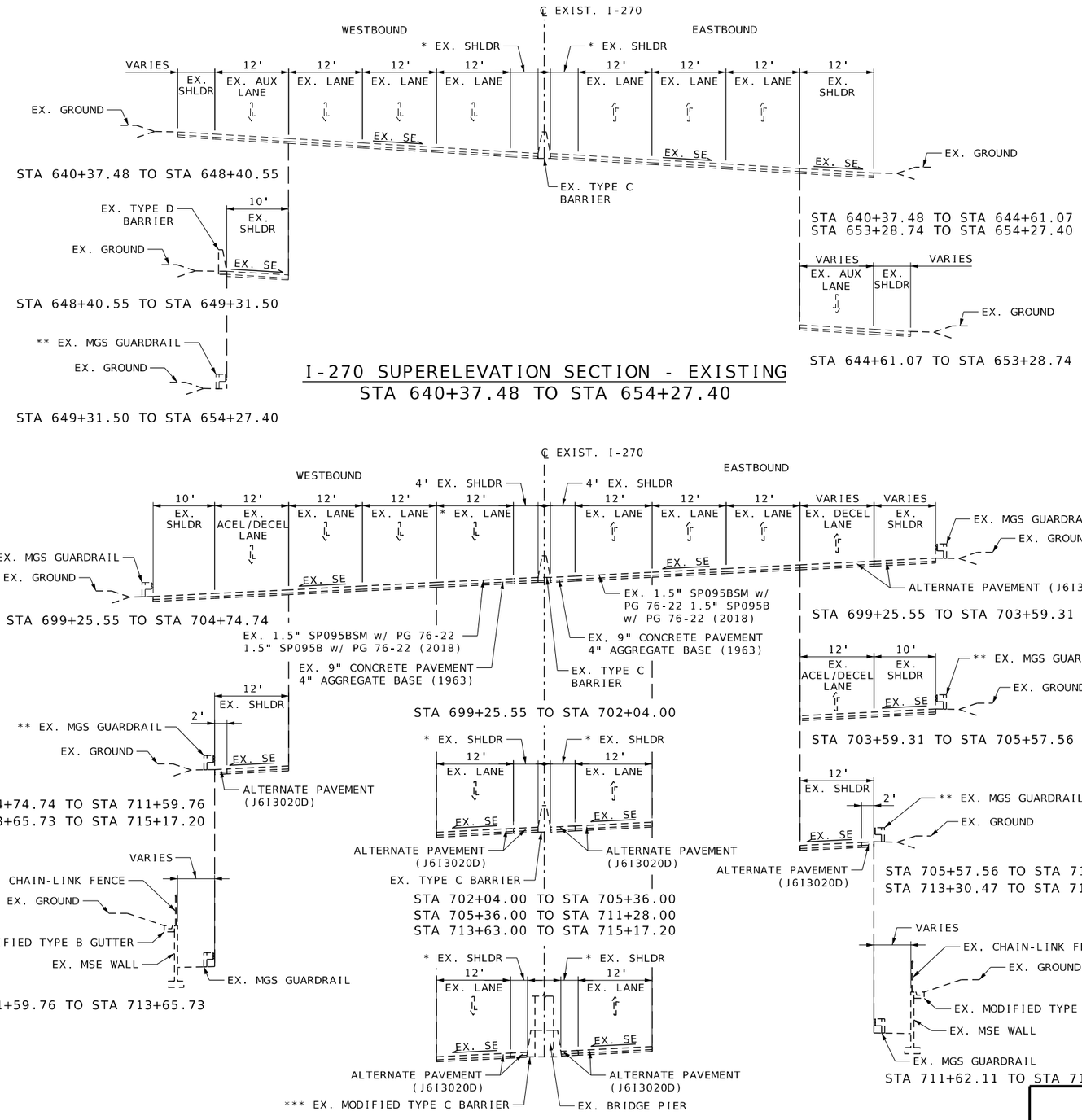

I-270 SUPERELEVATION SECTION - EXISTING
STA 640+37.48 TO STA 654+27.40

I-270 SUPERELEVATED SECTION - EXISTING
STA 699+25.55 TO STA 715+17.20

N.T.S. - FOLLOW DIMENSIONS

STATE OF MISSOURI
EUGENE LOUIS KUEKER JR.
NUMBER PE-2010009912
PROFESSIONAL ENGINEER

THIS SHEET HAS BEEN SIGNED, SEALED, AND DATED ELECTRONICALLY.

IF A SEAL IS PRESENT ON THIS SHEET IT HAS BEEN ELECTRONICALLY SEALED AND DATED.

DATE PREPARED 3/25/2026

ROUTE	STATE
I-270	MO
DISTRICT	SHEET NO.
SL	2

COUNTY: ST. LOUIS

JOB NO.: J6I3580B

CONTRACT ID.:

PROJECT NO.:

BRIDGE NO.:

DESCRIPTION	DATE

MISSOURI HIGHWAYS AND TRANSPORTATION COMMISSION

105 WEST CAPITOL
JEFFERSON CITY, MO 65102
1-888-ASK-MODOT (1-888-275-6636)

HDR Engineering, Inc.
1001 Highlands Plaza Drive
Suite 200
St. Louis, MO 63110-1337
314-425-8300
Certificate of Authority: 000856

TYPICAL SECTIONS
SHEET 3 OF 10

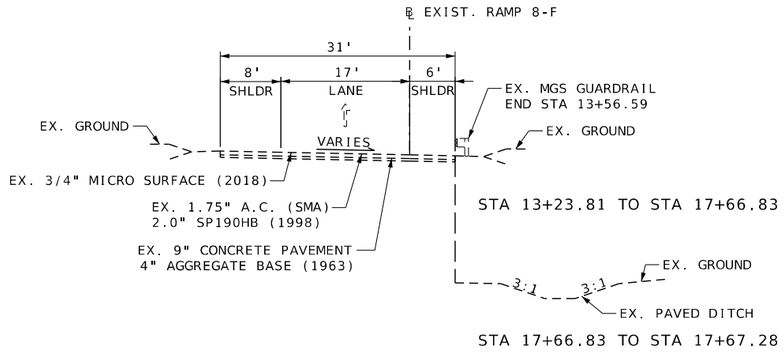

RAMP 8-F - EXISTING
STA 13+23.81 TO STA 17+67.28

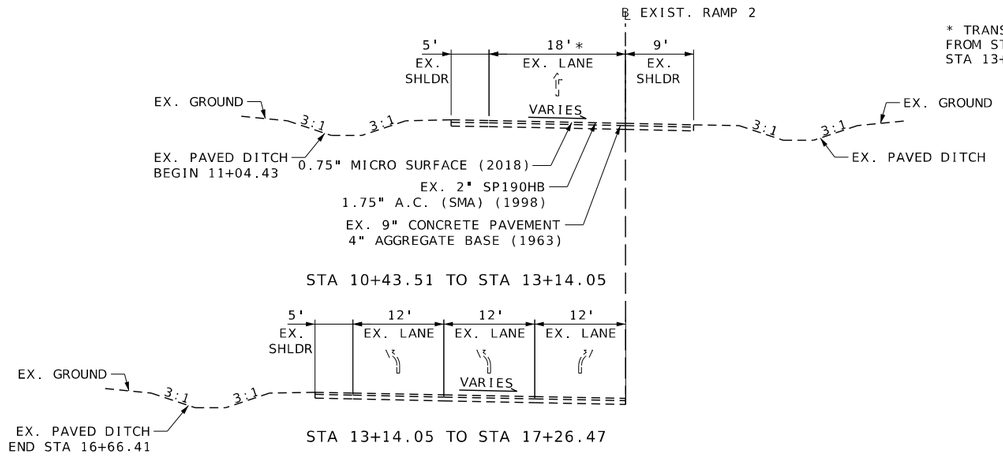

* TRANSITION FROM 18' TO 36' FROM STA 10+84.85 TO STA 13+14.05

BELLEFONTAINE RD RAMP #2 - EXISTING
STA 10+43.51 TO STA 17+26.47

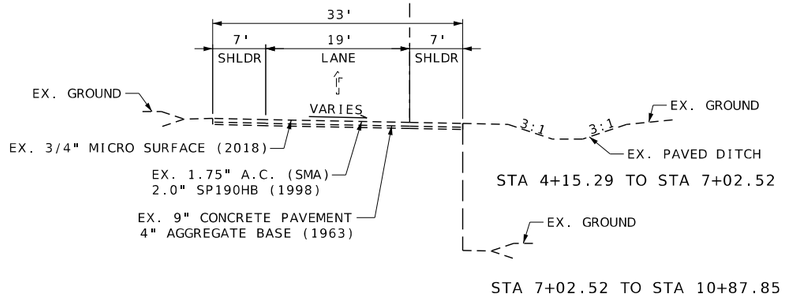

RAMP 8-G - EXISTING
STA 4+15.29 TO STA 10+87.85

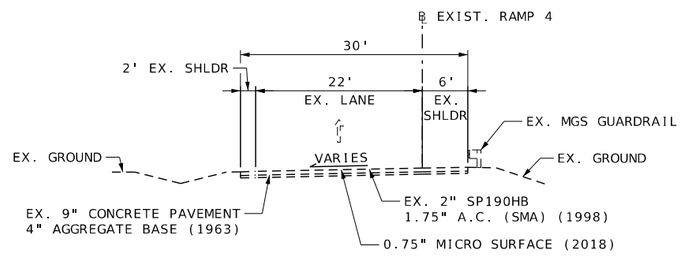

BELLEFONTAINE RD RAMP #4 - EXISTING
STA 1+12.44 TO STA 7+04.61

TYPICAL SECTIONS
SHEET 4 OF 10

N.T.S. - FOLLOW DIMENSIONS

STATE OF MISSOURI
EUGENE LOUIS KUEKER JR.
NUMBER PE-2010009912
PROFESSIONAL ENGINEER

THIS SHEET HAS BEEN SIGNED, SEALED, AND DATED ELECTRONICALLY.

DATE PREPARED 3/25/2026
ROUTE I-270 | STATE MO
DISTRICT SL | SHEET NO. 2
COUNTY ST. LOUIS
JOB NO. J6I3580B
CONTRACT ID.
PROJECT NO.
BRIDGE NO.

DESCRIPTION	DATE

IF A SEAL IS PRESENT ON THIS SHEET IT HAS BEEN ELECTRONICALLY SEALED AND DATED.

MISSOURI HIGHWAYS AND TRANSPORTATION COMMISSION
105 WEST CAPITOL
JEFFERSON CITY, MO 65102
1-888-ASK-MODOT (1-888-275-6636)

HDR Engineering, Inc.
1001 Highlands Plaza Drive
Suite 200
St. Louis, MO 63110-1337
314-425-8300
Certificate of Authority: 000856

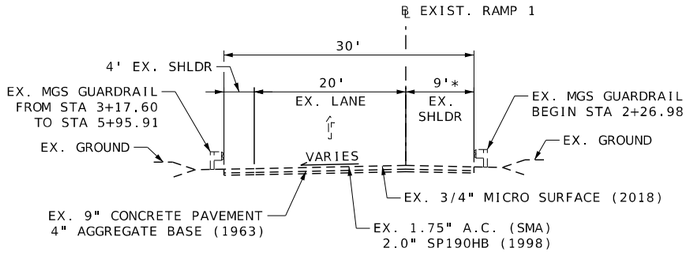

* TRANSITION FROM 9' TO 6' FROM STA 1+82.69 TO STA 2+23.05

LILAC RAMP #1 - EXISTING
STA 0+72.00 TO STA 8+08.39

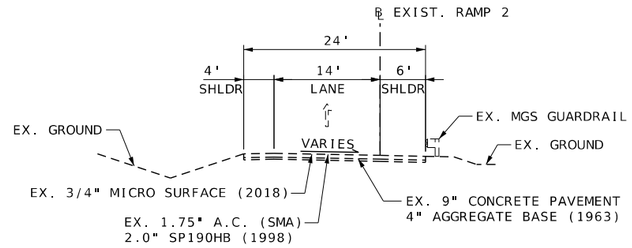

LILAC RAMP #2 - EXISTING
STA 6+63.88 TO STA 11+07.92

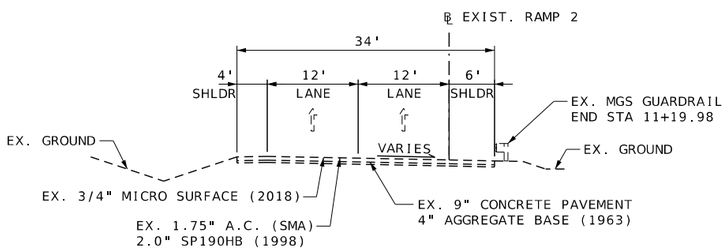

LILAC RAMP #2 - EXISTING
STA 11+07.92 TO STA 12+92.00

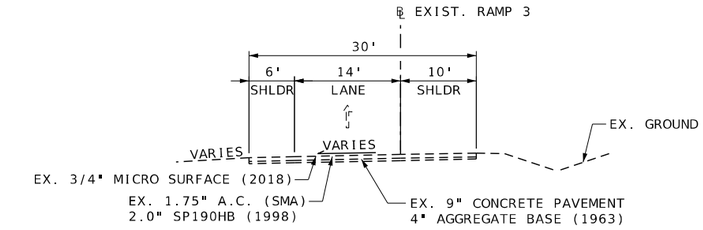

LILAC RAMP #3 - EXISTING
STA 5+71.03 TO STA 11+96.30

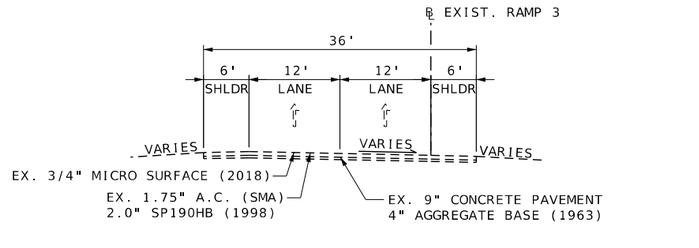

LILAC RAMP #3 - EXISTING
STA 11+96.30 TO STA 13+53.00

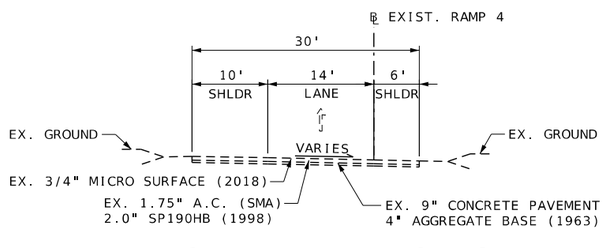

LILAC RAMP #4 - EXISTING
STA 0+75.00 TO STA 7+15.26

TYPICAL SECTIONS
SHEET 5 OF 10

N.T.S. - FOLLOW DIMENSIONS

STATE OF MISSOURI
EUGENE LOUIS KUEKER JR.
NUMBER PE-2010009912
PROFESSIONAL ENGINEER
THIS SHEET HAS BEEN SIGNED, SEALED, AND DATED ELECTRONICALLY.

DATE PREPARED 3/25/2026
ROUTE I-270 | STATE MO
DISTRICT SL | SHEET NO. 2
COUNTY ST. LOUIS
JOB NO. J6I3580B
CONTRACT ID.
PROJECT NO.
BRIDGE NO.

DESCRIPTION | DATE

IF A SEAL IS PRESENT ON THIS SHEET IT HAS BEEN ELECTRONICALLY SEALED AND DATED.

MISSOURI HIGHWAYS AND TRANSPORTATION COMMISSION
105 WEST CAPITOL
JEFFERSON CITY, MO 65102
1-888-ASK-MODOT (1-888-275-6636)

HDR Engineering, Inc.
1001 Highlands Plaza Drive
Suite 200
St. Louis, MO 63110-1337
314-425-8300
Certificate of Authority: 000856

* EX. INSIDE SHOULDER WIDTH (EASTBOUND & WESTBOUND)	
WIDTH	STATIONS
5'	615+75.00 TO 640+37.48
5' TO 4.5'	654+27.40 TO 652+89.92
4.5'	652+89.92 TO 654+70.00
4.5'	667+20.00 TO 694+81.73

** EX. OUTSIDE SHOULDER WIDTH (EASTBOUND)	
WIDTH	STATIONS
12'	615+75.00 TO 620+52.58
10'	620+52.58 TO 640+37.48
12'	654+27.40 TO 654+70.00
12'	667+20.00 TO 667+65.00
10'	667+65.00 TO 685+98.00
10'	685+98.00 TO 694+81.73

** EX. OUTSIDE SHOULDER WIDTH (WESTBOUND)	
WIDTH	STATIONS
10'	615+75.00 TO 620+52.58
12' TO 10'	620+52.58 TO 628+62.78
10'	628+62.78 TO 640+37.48
10'	654+27.40 TO 654+70.00
12'	667+20.00 TO 682+49.67
12' TO 10'	682+49.67 TO 685+98.00
10'	685+98.00 TO 694+90.76

*** EX. MGS GUARDRAIL (EASTBOUND)
STATIONS
640+62.22 TO 641+26.22
667+65.00 TO 680+20.47
685+79.64 TO 685+98.00

*** EX. MGS GUARDRAIL (WESTBOUND)
STATIONS
615+75.00 TO 617+81.70
620+95.91 TO 622+02.33
632+41.70 TO 633+88.60
654+27.40 TO 654+70.00
667+20.00 TO 676+14.80
679+03.99 TO 681+42.47
687+84.59 TO 694+81.73

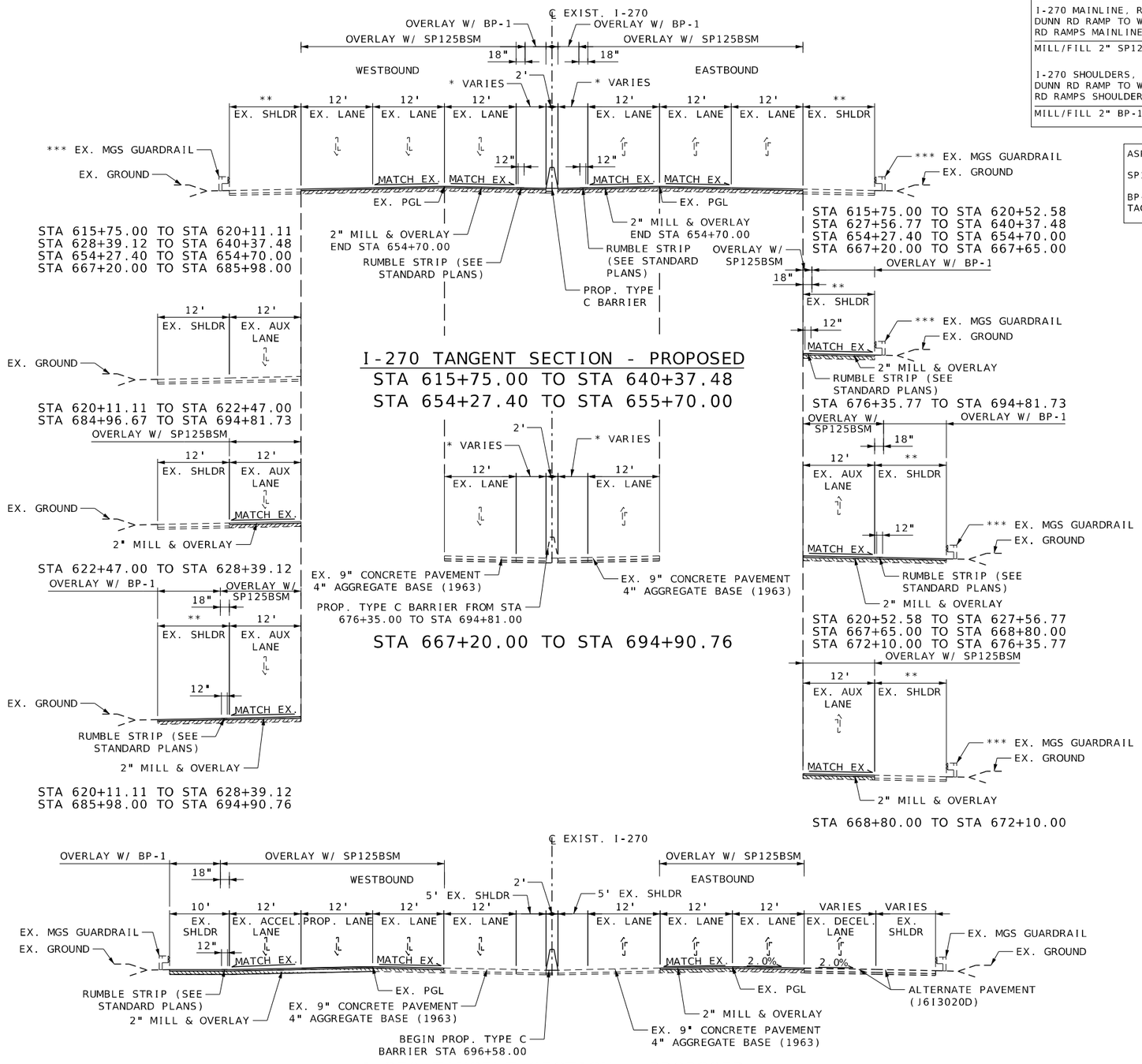

REHAB CONSTRUCTION

I-270 MAINLINE, RAMP 8-G MAINLINE, RAMP 8-F MAINLINE, DUNN RD RAMP TO WB I-270 MAINLINE, I-270/BELLEFONTAINE RD RAMPS MAINLINE, I-270/LILAC RAMPS MAINLINE:

MILL/FILL 2" SP125BSM w/ PG 76-22

I-270 SHOULDERS, RAMP 8-G SHOULDERS, RAMP 8-F SHOULDERS, DUNN RD RAMP TO WB I-270 SHOULDERS, I-270/BELLEFONTAINE RD RAMPS SHOULDERS, I-270/LILAC RAMPS SHOULDERS:

MILL/FILL 2" BP-1 w/ PG 64-22

ASPHALT APPLICATION RATES:

SP125BSM w/ PG 76-22:	1.97 TONS PER CY
BP-1 w/ PG 64-22:	1.99 TONS PER CY
TACK COAT:	0.13 GAL PER SY

N.T.S. - FOLLOW DIMENSIONS

TYPICAL SECTIONS
SHEET 6 OF 10

STATE OF MISSOURI
EUGENE LOUIS KUEKER JR.
NUMBER PE-2010009912
PROFESSIONAL ENGINEER
THIS SHEET HAS BEEN SIGNED, SEALED, AND DATED ELECTRONICALLY.

DATE PREPARED 3/25/2026
ROUTE I-270 | STATE MO
DISTRICT SL | SHEET NO. 2
COUNTY ST. LOUIS
JOB NO. J6I3580B
CONTRACT ID.
PROJECT NO.
BRIDGE NO.

DESCRIPTION | DATE

IF A SEAL IS PRESENT ON THIS SHEET IT HAS BEEN ELECTRONICALLY SEALED AND DATED.

MISSOURI HIGHWAYS AND TRANSPORTATION COMMISSION
105 WEST CAPITOL
JEFFERSON CITY, MO 65102
1-888-ASK-MODOT (1-888-275-6636)

HDR Engineering, Inc.
1001 Highlands Plaza Drive
Suite 200
St. Louis, MO 63110-1337
314-425-8300
Certificate of Authority: 000856

c:\pwworking\central01\d5178262\002_TS06_J6I3580B_I10.dgn 1:49:13 PM 3/25/2026

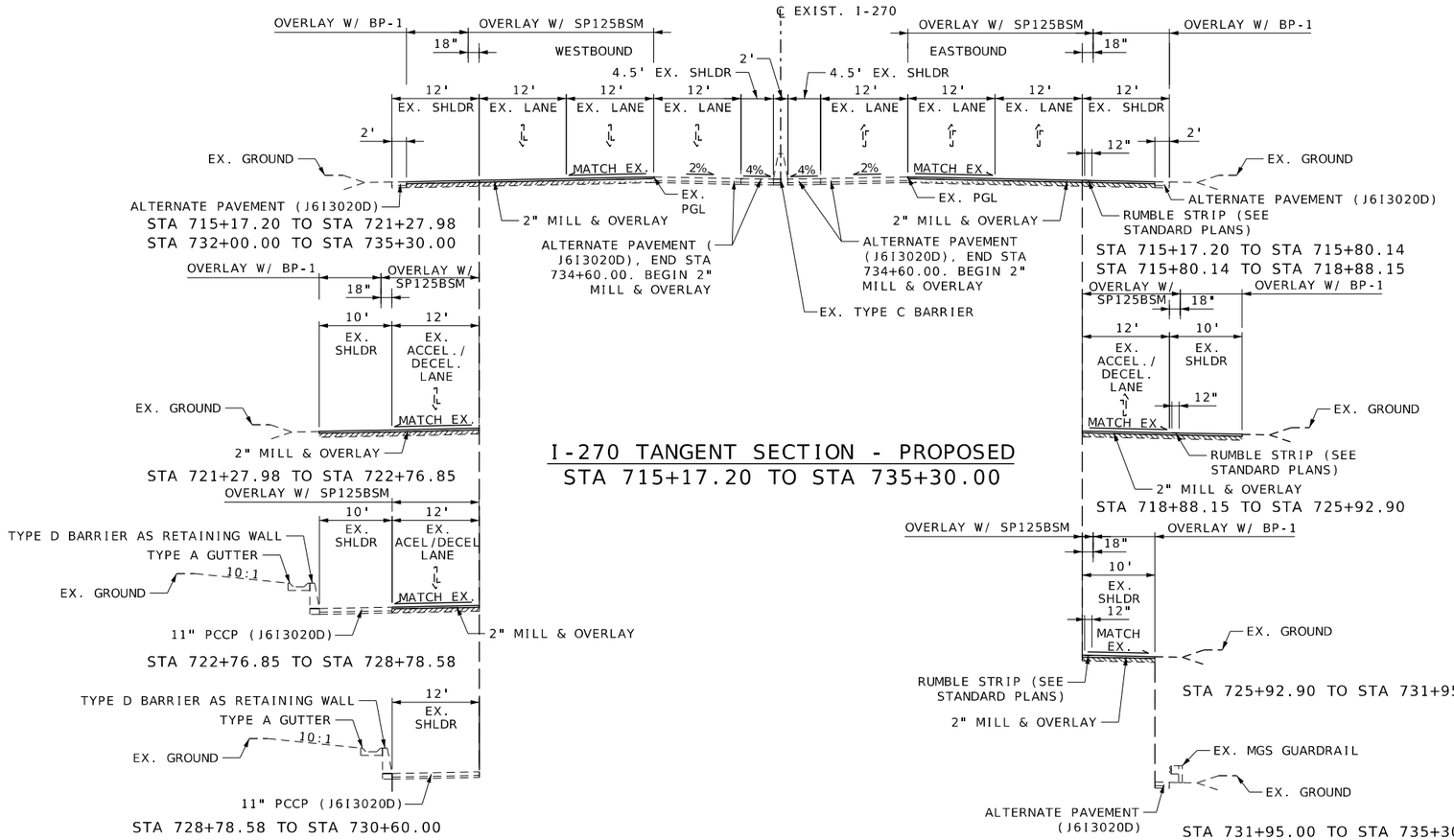

I-270 TANGENT SECTION - PROPOSED
STA 715+17.20 TO STA 735+30.00

* EX. INSIDE SHOULDER WIDTH (EASTBOUND & WESTBOUND)	
WIDTH	STATIONS
4.5' TO 10'	735+30.00 TO 738+60.00

** EX. MGS GUARDRAIL (WESTBOUND)
STATIONS
730+60.00 TO 731+48.00

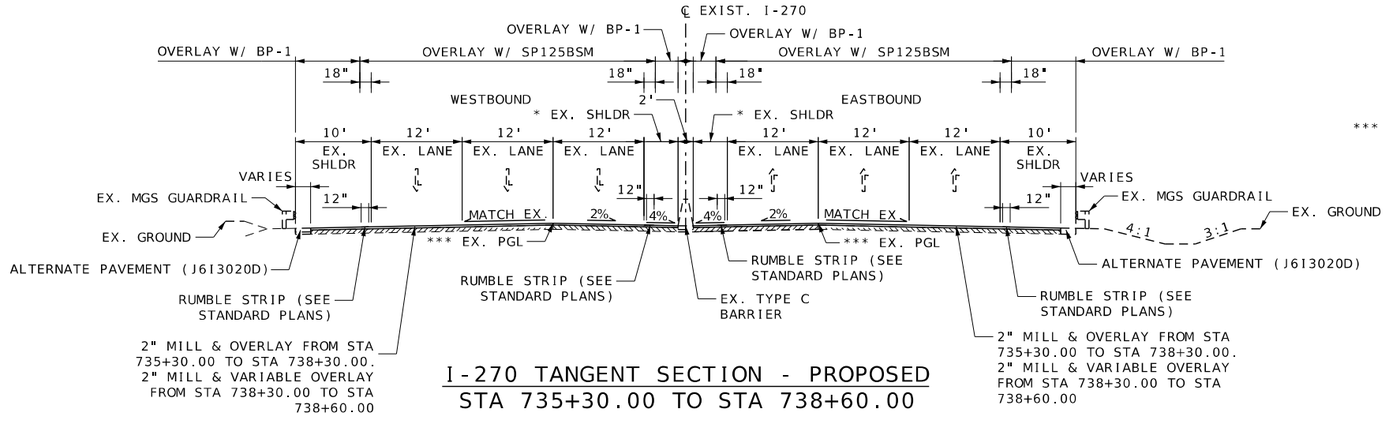

I-270 TANGENT SECTION - PROPOSED
STA 735+30.00 TO STA 738+60.00

*** TRANSITION CROWN FROM 17'-6" TO 23'-0" FROM STA 738+30.00 TO STA 738+60.00

N.T.S. - FOLLOW DIMENSIONS

TYPICAL SECTIONS
SHEET 7 OF 10

STATE OF MISSOURI
EUGENE LOUIS KUEKER JR.
NUMBER PE-2010009912
PROFESSIONAL ENGINEER
THIS SHEET HAS BEEN SIGNED, SEALED, AND DATED ELECTRONICALLY.

DATE PREPARED 3/25/2026
ROUTE I-270 | STATE MO
DISTRICT SL | SHEET NO. 2
COUNTY ST. LOUIS
JOB NO. J6I3580B
CONTRACT ID.
PROJECT NO.
BRIDGE NO.

DESCRIPTION | DATE

IF A SEAL IS PRESENT ON THIS SHEET IT HAS BEEN ELECTRONICALLY SEALED AND DATED.

MISSOURI HIGHWAYS AND TRANSPORTATION COMMISSION
105 WEST CAPITOL
JEFFERSON CITY, MO 65102
1-888-ASK-MODOT (1-888-275-6636)

HDR Engineering, Inc.
1001 Highlands Plaza Drive
Suite 200
St. Louis, MO 63110-1337
314-425-8300
Certificate of Authority: 000856

* EX. INSIDE SHOULDER WIDTH (EASTBOUND & WESTBOUND)	
WIDTH	STATIONS
5'	640+37.48 TO 652+59.92
5' TO 4.5'	652+59.92 TO 652+89.92
4.5'	652+89.92 TO 654+27.40
4' TO 4.5'	705+06.00 TO 705+36.00
4.5'	705+36.00 TO 711+28.00
VARIES	711+28.00 TO 713+63.00
4.5'	713+63.00 TO 715+17.20

** EX. MGS GUARDRAIL (EASTBOUND)
STATIONS
699+25.55 TO 705+56.88
706+82.00 TO 709+31.10
713+43.00 TO 715+17.20

** EX. MGS GUARDRAIL (WESTBOUND)
STATIONS
649+31.50 TO 654+16.00
711+51.00 TO 711+51.88
713+73.51 TO 714+71.79

**** EX. BARRIER (EASTBOUND & WESTBOUND)	
TYPE	STATIONS
TYPE C TO MODIFIED TYPE C	711+28.00 TO 712+15.02
MODIFIED TYPE C	712+15.02 TO 712+88.02
MODIFIED TYPE C TO TYPE C	712+88.02 TO 713+63.00

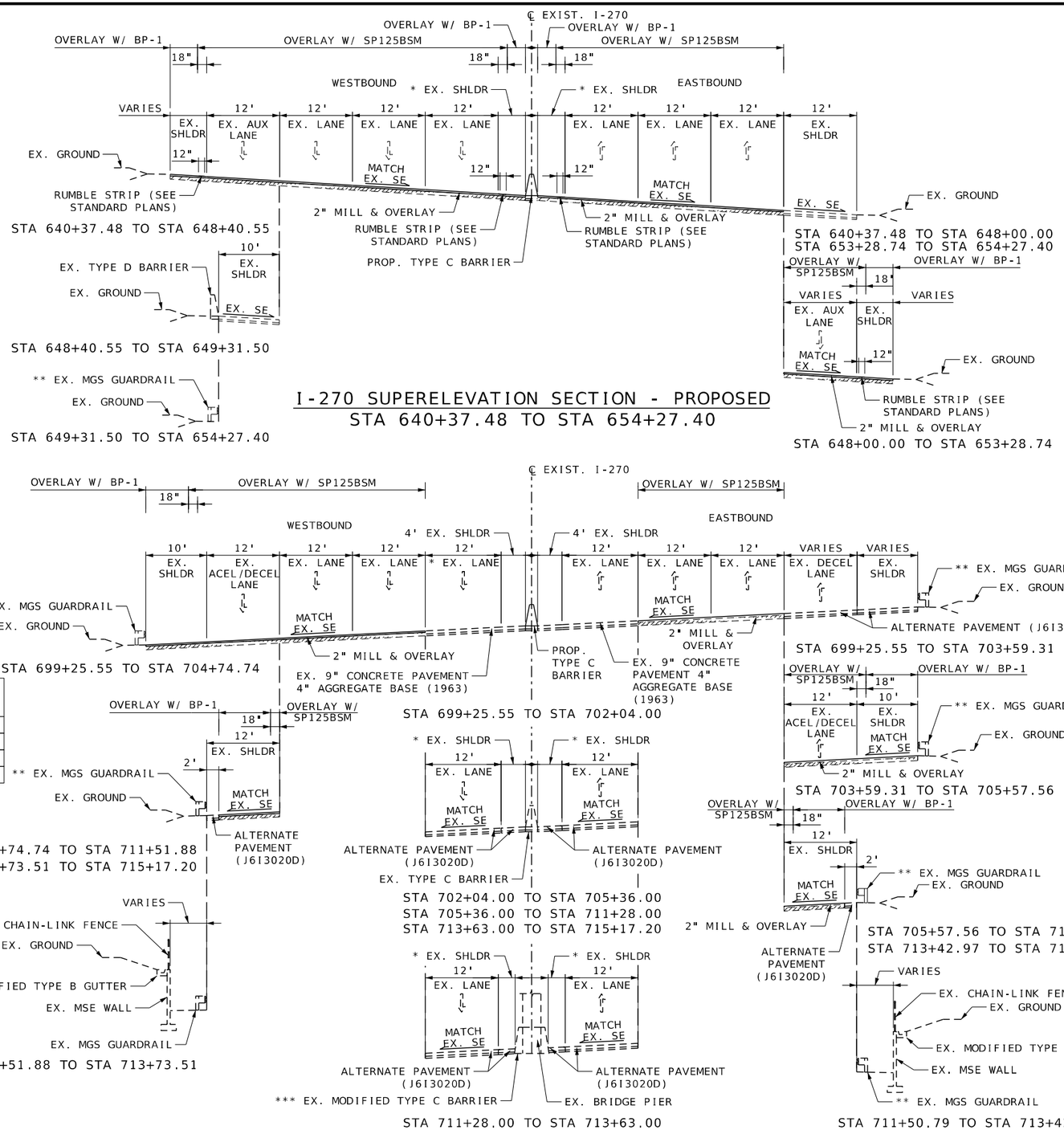

STATE OF MISSOURI
EUGENE LOUIS KUEKER JR.
NUMBER PE-2010009912
PROFESSIONAL ENGINEER

THIS SHEET HAS BEEN SIGNED, SEALED, AND DATED ELECTRONICALLY.

IF A SEAL IS PRESENT ON THIS SHEET IT HAS BEEN ELECTRONICALLY SEALED AND DATED.

DATE PREPARED: 3/25/2026

ROUTE	STATE
I-270	MO
DISTRICT	SHEET NO.
SL	2

COUNTY: ST. LOUIS
JOB NO.: J6I3580B
CONTRACT ID.:
PROJECT NO.:
BRIDGE NO.:

DESCRIPTION	DATE

MISSOURI HIGHWAYS AND TRANSPORTATION COMMISSION
105 WEST CAPITOL
JEFFERSON CITY, MO 65102
1-888-ASK-MODOT (1-888-275-6636)

HDR Engineering, Inc.
1001 Highlands Plaza Drive
Suite 200
St. Louis, MO 63110-1337
314-425-8300
Certificate of Authority: 000856

TYPICAL SECTIONS
SHEET 8 OF 10

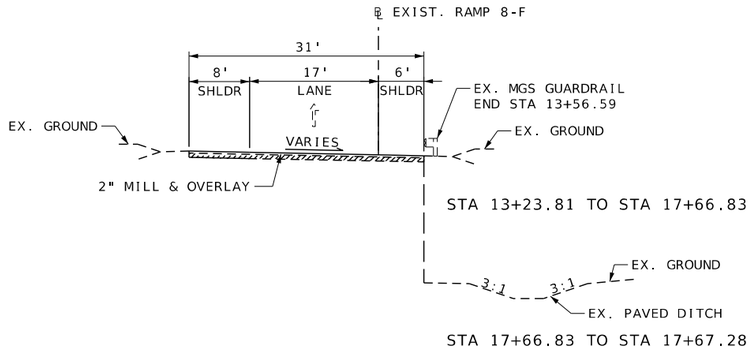

RAMP 8-F - PROPOSED
STA 13+23.81 TO STA 17+67.28

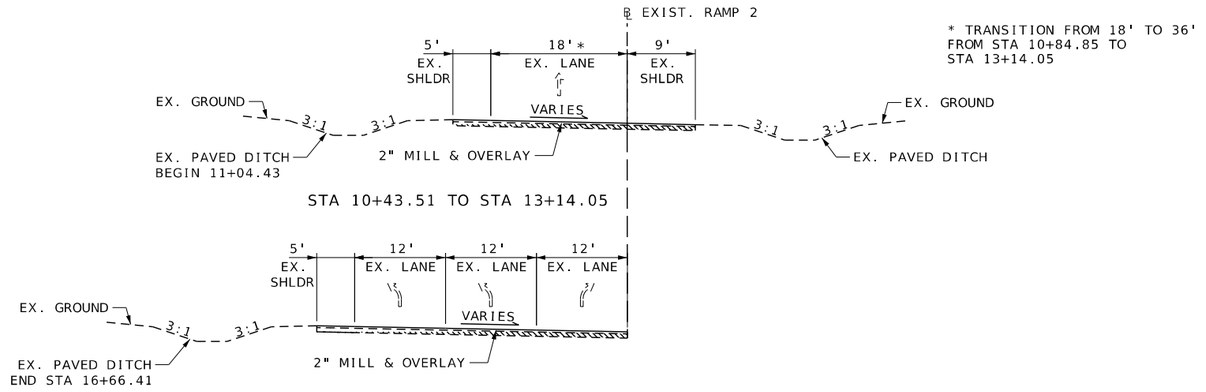

BELLEFONTAINE RD RAMP #2 - PROPOSED
STA 10+43.51 TO STA 17+26.47

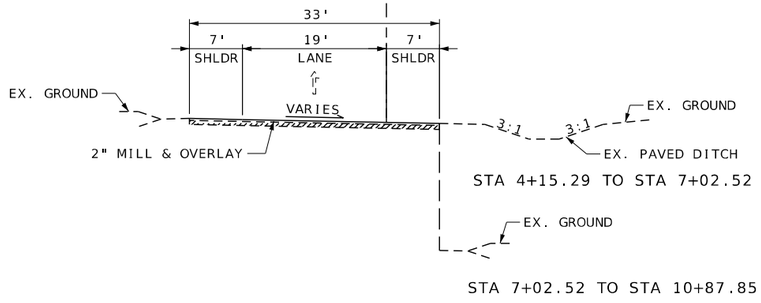

RAMP 8-G - PROPOSED
STA 4+15.29 TO STA 10+87.85

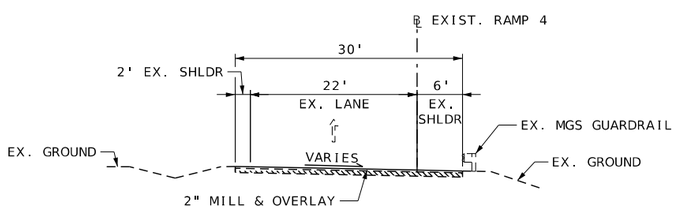

BELLEFONTAINE RD RAMP #4 - PROPOSED
STA 1+12.44 TO STA 7+04.61

N.T.S. - FOLLOW DIMENSIONS

TYPICAL SECTIONS
SHEET 9 OF 10

IF A SEAL IS PRESENT ON THIS SHEET IT HAS BEEN ELECTRONICALLY SEALED AND DATED.

STATE OF MISSOURI
EUGENE LOUIS KUEKER JR.
NUMBER PE-2010000912
PROFESSIONAL ENGINEER
THIS SHEET HAS BEEN SIGNED, SEALED, AND DATED ELECTRONICALLY.

DATE PREPARED: 3/25/2026
ROUTE: I-270 | STATE: MO
DISTRICT: SL | SHEET NO.: 2
COUNTY: ST. LOUIS
JOB NO.: J6I3580B
CONTRACT ID.:
PROJECT NO.:
BRIDGE NO.:

DESCRIPTION	DATE

MISSOURI HIGHWAYS AND TRANSPORTATION COMMISSION
105 WEST CAPITOL
JEFFERSON CITY, MO 65102
1-888-ASK-MODOT (1-888-275-6636)

HDR Engineering, Inc.
1001 Highlands Plaza Drive
Suite 200
St. Louis, MO 63110-1337
314-425-8300
Certificate of Authority: 000856

* TRANSITION FROM 9' TO 6' FROM
STA 1+82.69 TO STA 2+23.05

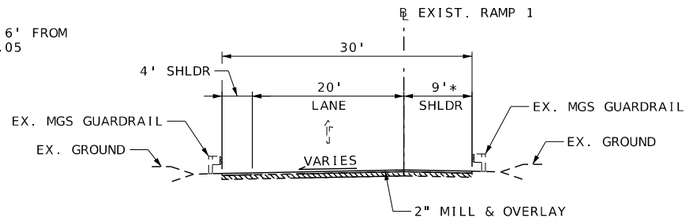

LILAC RAMP #1 - PROPOSED
STA 0+72.00 TO STA 8+08.39

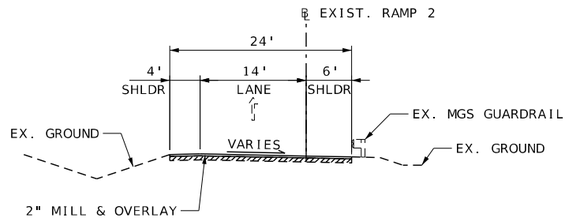

LILAC RAMP #2 - PROPOSED
STA 6+63.88 TO STA 11+07.92

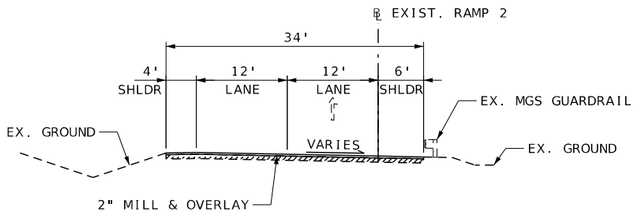

LILAC RAMP #2 - PROPOSED
STA 11+07.92 TO STA 12+92.00

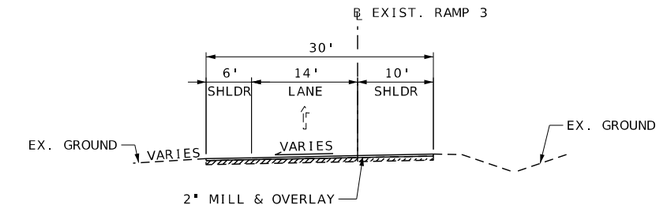

LILAC RAMP #3 - PROPOSED
STA 5+71.03 TO STA 11+96.30

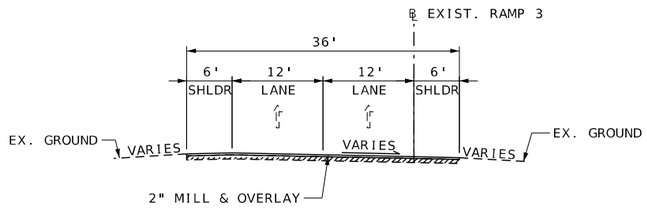

LILAC RAMP #3 - PROPOSED
STA 11+96.30 TO STA 13+53.00

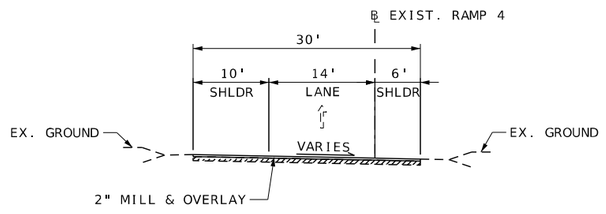

LILAC RAMP #4 - PROPOSED
STA 0+75.00 TO STA 7+15.26

N.T.S. - FOLLOW DIMENSIONS

TYPICAL SECTIONS
SHEET 10 OF 10

STATE OF MISSOURI
EUGENE LOUIS KUEKER JR.
NUMBER PE-2010009912
PROFESSIONAL ENGINEER
THIS SHEET HAS BEEN SIGNED, SEALED, AND DATED ELECTRONICALLY.

DATE PREPARED 3/25/2026
ROUTE I-270 | STATE MO
DISTRICT SL | SHEET NO. 2
COUNTY ST. LOUIS
JOB NO. J6I3580B
CONTRACT ID.
PROJECT NO.
BRIDGE NO.

DESCRIPTION | DATE

IF A SEAL IS PRESENT ON THIS SHEET IT HAS BEEN ELECTRONICALLY SEALED AND DATED.

MISSOURI HIGHWAYS AND TRANSPORTATION COMMISSION
105 WEST CAPITOL
JEFFERSON CITY, MO 65102
1-888-ASK-MODOT (1-888-275-6636)

HDR Engineering, Inc.
1001 Highlands Plaza Drive
Suite 200
St. Louis, MO 63110-1337
314-425-8300
Certificate of Authority: 000856

REMOVAL OF IMPROVEMENTS

SHEET NO.	FROM STA	TO STA	ROADWAY	LOCATION	DESCRIPTION	REMARKS
4, 5, 6, 7	615+75.00	655+70.00	I-270	CL	BARRIER	3995 LF
8, 9, 10	676+35.00	694+81.00	I-270	CL	BARRIER	1846 LF
10	696+58.00	702+04.00	I-270	CL	BARRIER	546 LF
TOTAL 1 LUMP SUM						

MOBILIZATION

LUMP SUM = 1

CONTRACTOR FURNISHED SURVEYING & STAKING

LUMP SUM = 1

TEMPORARY PAVEMENT MARKING PAINT

LUMP SUM = 1

MILL & OVERLAY

SHEET NO.	FROM STA	TO STA	ROADWAY	DIRECTION	LOCATION	AREA FOR INFO ONLY SF	COLDMILLING BITUMINOUS PAVEMENT FOR REMOVAL OF SURFACING (3 IN. THICK OR LESS) SY	SP125BSM (PG76-22) TON	2 INCH BP-1 (PG64-22) TON	TACK COAT GAL	REMARKS
4	1+83.67	10+87.86	RAMP 8-G	WESTBOUND	RT	7051.8	784		86.7	102	SHOULDER
4	1+83.67	10+87.86	RAMP 8-G	WESTBOUND	LT	16497.3	1833	200.6		238	MAINLINE
4	415+44.00	10+87.86	RAMP 8-G	WESTBOUND	LT	3556.8	395		43.7	51	SHOULDER
4	13+23.84	18+66.95	RAMP 8-F	EASTBOUND	LT	3747.8	416		46.0	54	SHOULDER
4, 5	13+23.84	25+38.97	RAMP 8-F	EASTBOUND	LT	16337.9	1815	198.6		236	MAINLINE
4, 5	13+23.84	25+38.97	RAMP 8-F	EASTBOUND	RT	7482.2	831		91.9	108	SHOULDER
4, 5, 6, 7	615+75.00	654+70.00	I-270	EASTBOUND	RT	151984.2	16887	1848.2		2195	MAINLINE
4, 5, 6, 7	615+75.00	654+70.00	I-270	WESTBOUND	LT	153862.0	17096	1871.1		2222	MAINLINE
4, 5, 6, 7	615+75.00	652+89.60	I-270	EASTBOUND	RT	13310.4	1479		163.5	192	SHOULDER
4, 5, 6, 7	615+75.00	652+89.60	I-270	WESTBOUND	LT	13517.3	1502		166.1	195	SHOULDER
7	652+89.60	654+70.00	I-270	EASTBOUND	RT	538.3	60	6.6		8	SHOULDER
7	652+89.60	654+70.00	I-270	WESTBOUND	LT	544.0	60	6.6		8	SHOULDER
6, 7	5+22.65	17+26.47	BELLEFONTAINE RD RAMP 2	EASTBOUND	RT	10796.8	1200		132.7	156	SHOULDER
6, 7	5+22.65	17+26.47	BELLEFONTAINE RD RAMP 2	EASTBOUND	LT	30199.6	3356	367.3		436	MAINLINE
7	10+44.42	17+26.47	BELLEFONTAINE RD RAMP 2	EASTBOUND	LT	2983.6	332		36.7	43	SHOULDER
7, 8	1+12.44	7+04.22	BELLEFONTAINE RD RAMP 4	EASTBOUND	LT	1177.1	131	14.3		17	SHOULDER
7, 8	1+12.44	14+10.80	BELLEFONTAINE RD RAMP 4	EASTBOUND	LT	23100.1	2567	280.9		334	MAINLINE
8	1+12.44	8+11.90	BELLEFONTAINE RD RAMP 4	EASTBOUND	RT	8949.5	994		109.9	129	SHOULDER
8	11+43.17	14+10.80	BELLEFONTAINE RD RAMP 4	EASTBOUND	RT	2402.8	267		29.5	35	SHOULDER
8, 9	667+20.00	684+79.00	I-270	EASTBOUND	RT	45904.0	5100	558.2		663	MAINLINE
8, 9	667+20.00	684+72.00	I-270	WESTBOUND	LT	44260.9	4918	538.2		639	MAINLINE
8, 9	674+77.63	684+79.00	I-270	EASTBOUND	RT	11577.1	1286		142.2	167	SHOULDER
10, 11, 12, 13	697+26.00	738+30.00	I-270	EASTBOUND	RT	120065.7	13341	1460.1		1734	MAINLINE
10, 11, 12, 13	698+26.00	738+30.00	I-270	WESTBOUND	LT	116752.2	12972	1419.7		1686	MAINLINE
10	698+26.00	701+64.14	I-270	WESTBOUND	LT	1772.7	197		21.8	26	SHOULDER
10, 11, 12	704+74.74	721+38.64	I-270	WESTBOUND	LT	14096.3	1566		173.1	204	SHOULDER
10, 11, 12	705+57.56	719+03.49	I-270	EASTBOUND	RT	11507.8	1279		141.4	166	SHOULDER
12, 13	720+60.90	733+72.00	I-270	EASTBOUND	RT	12321.5	1369		151.4	178	SHOULDER
13	738+30.00	738+60.00	I-270	EASTBOUND	RT	1429.8	159	33.1		21	2" MILL, VARIABLE OVERLAY
13	738+30.00	738+60.00	I-270	WESTBOUND	LT	1405.5	156	32.4		20	2" MILL, VARIABLE OVERLAY
10, 11	0+72.00	11+10.80	LILAC AVE RAMP 1	WESTBOUND	RT/LT	10076.2	1120		123.8	146	SHOULDER
10, 11	0+72.00	11+10.80	LILAC AVE RAMP 1	WESTBOUND	LT	14348.5	1594	174.5		207	MAINLINE
11	0+72.00	08+07.29	LILAC AVE RAMP 1	WESTBOUND	LT	4463.0	496		54.8	64	SHOULDER
11	4+00.28	12+92.00	LILAC AVE RAMP 2	EASTBOUND	LT	2441.4	271		30.0	35	SHOULDER
10, 11	4+65.35	12+92.00	LILAC AVE RAMP 2	EASTBOUND	LT	18358.7	2040	223.3		265	MAINLINE
10, 11	6+64.31	12+92.00	LILAC AVE RAMP 2	EASTBOUND	RT	4937.9	549		60.7	71	SHOULDER
11, 12	4+25.00	13+53.00	LILAC AVE RAMP 3	WESTBOUND	RT	5565.0	618		68.3	80	SHOULDER
11, 12	3+11.19	13+53.00	LILAC AVE RAMP 3	WESTBOUND	LT	17109.8	1901	208.1		247	MAINLINE
11, 12	5+60.22	13+53.00	LILAC AVE RAMP 3	WESTBOUND	LT	6676.6	742		82.0	96	SHOULDER
11, 12	0+75.00	7+15.26	LILAC AVE RAMP 4	EASTBOUND	LT	3941.6	438		48.4	57	SHOULDER
11, 12	0+75.00	8+69.68	LILAC AVE RAMP 4	EASTBOUND	LT	14946.1	1661	181.8		216	MAINLINE
11, 12	0+75.00	8+69.68	LILAC AVE RAMP 4	EASTBOUND	RT	5122.4	569		62.9	74	SHOULDER
					SUBTOTAL	106347	9623.6	2067.5	13821		
					PAY TOTAL	106347	9623.6	2067.5	13821		

SUMMARY OF QUANTITIES
SHEET 1 OF 3

STATE OF MISSOURI
EUGENE LOUIS KUEKER JR.
NUMBER PE-2010009912
PROFESSIONAL ENGINEER

THIS SHEET HAS BEEN SIGNED, SEALED, AND DATED ELECTRONICALLY.

DATE PREPARED: 3/25/2026
ROUTE: I-270 | STATE: MO
DISTRICT: SL | SHEET NO.: 3
COUNTY: ST. LOUIS
JOB NO.: J6I3580B
CONTRACT ID.:
PROJECT NO.:
BRIDGE NO.:

DESCRIPTION | DATE

IF A SEAL IS PRESENT ON THIS SHEET IT HAS BEEN ELECTRONICALLY SEALED AND DATED.

MISSOURI HIGHWAYS AND TRANSPORTATION COMMISSION
105 WEST CAPITOL
JEFFERSON CITY, MO 65102
1-888-ASK-MODOT (1-888-275-6636)

HDR Engineering, Inc.
1001 Highlands Plaza Drive
Suite 200
St. Louis, MO 63110-1337
314-425-8300
Certificate of Authority: 000856

PERMANENT STRIPING

SHEET	ROADWAY	6" WHITE 25-MIL, TYPE L BEADS SOLID LF	6" WHITE 25-MIL, TYPE L BEADS INTER LF	6" WHITE 25-MIL, TYPE L BEADS DOTTED LF	6" YELLOW 25-MIL, TYPE L BEADS SOLID LF	12" WHITE 25-MIL, TYPE L BEADS SOLID LF	PERFORMED THERMOPLASTIC PAVEMENT MARKING LEFT/RIGHT ARROW EA	PERFORMED THERMOPLASTIC PAVEMENT MARKING PREFORMED LANE DROP ARROW EA
26 - 35	I-270	9367	45947	4405	22974	2205		
27	RAMP 8-F	1216			454	102		1
27	RAMP 8-G	905			658	110		
30	BELLEFONTAINE RD RAMP 2	2083			680	231	6	
29, 30	BELLEFONTAINE RD RAMP 4	1456			592	266		1
32, 33	LILAC AVE RAMP 1	1542			792	106		
32, 33	LILAC AVE RAMP 2	1677			669	108	4	
33, 34	LILAC AVE RAMP 3	1738			727	169	4	
33, 34	LILAC AVE RAMP 4	1395			638	103		1
29	DUNN RD RAMP TO I-270 WB	1492				483		3
	TOTAL LENGTH	22871	45947	4405	28184	3883	14	6
	ADJUSTMENT FACTOR	1	0.25	0.25	1	1	1	1
	SUBTOTAL	22871	11487	1101	28184	3883	14	6
	PAY TOTAL	35459			28184	3883	14	6

INLAID PAVEMENT MARKER INSTALLATION

SHEET NO.	FROM STA	TO STA	ROADWAY	LOCATION	INLAID PAVEMENT MARKER EA
26 - 29	615+75.00	654+70.00	I-270	LT	204
26 - 29	615+75.00	654+70.00	I-270	RT	204
30 - 32	667+20.00	694+85.88	I-270	LT	140
30 - 32	667+20.00	694+77.59	I-270	RT	140
32 - 35	696+53.44	741+49.00	I-270	RT	228
32 - 35	696+59.71	742+35.00	I-270	LT	232
				SUBTOTAL	1148
				PAY TOTAL	1148

RUMBLE STRIPS

SHEET NO.	FROM STA	TO STA	ROADWAY	DIRECTION	LOCATION	BITUMINOUS SHOULDER RUMBLE STRIP STA	REMARKS
4, 5, 6, 7	615+75.00	654+70.00	I-270	WESTBOUND	INSIDE	39.0	
4, 5, 6, 7	615+75.00	654+70.00	I-270	EASTBOUND	INSIDE	39.0	
4	620+11.11	620+87.05	I-270	WESTBOUND	OUTSIDE	0.8	
6	644+02.00	648+40.55	I-270	EASTBOUND	OUTSIDE	4.4	
7	652+19.20	653+28.70	I-270	EASTBOUND	OUTSIDE	1.1	
8	667+65.57	669+29.11	I-270	EASTBOUND	OUTSIDE	1.6	
8, 9, 10	676+35.51	684+79.00	I-270	EASTBOUND	OUTSIDE	8.4	
10	698+26.00	702+82.63	I-270	WESTBOUND	OUTSIDE	4.6	
11, 12	704+21.07	721+87.91	I-270	WESTBOUND	OUTSIDE	17.7	
11, 12	705+57.56	719+24.93	I-270	EASTBOUND	OUTSIDE	13.7	
12, 13	726+60.58	733+72.00	I-270	EASTBOUND	OUTSIDE	7.1	
13	734+60.00	738+60.00	I-270	WESTBOUND	INSIDE	4.0	
13	734+60.00	738+60.00	I-270	EASTBOUND	INSIDE	4.0	
					SUBTOTAL	145.4	
					PAY TOTAL	145.4	

CONCRETE TRAFFIC BARRIER

SHEET NO.	FROM STA	TO STA	ROADWAY	LOCATION	TYPE 'C' LF
4, 5, 6, 7	615+75.00	655+70.00	I-270	CL	3995
8, 9, 10	676+35.00	694+81.00	I-270	CL	1846
10	696+58.00	702+04.00	I-270	CL	546
				SUBTOTAL	6387
				PAY TOTAL	6387

SUMMARY OF QUANTITIES
SHEET 2 OF 3

STATE OF MISSOURI
EUGENE LOUIS KUEKER JR.
NUMBER PE-2010000912
PROFESSIONAL ENGINEER

THIS SHEET HAS BEEN SIGNED, SEALED, AND DATED ELECTRONICALLY.

DATE PREPARED 3/25/2026
ROUTE I-270 | STATE MO
DISTRICT SL | SHEET NO. 3
COUNTY ST. LOUIS
JOB NO. J6I3580B
CONTRACT ID.
PROJECT NO.
BRIDGE NO.

DESCRIPTION | DATE

IF A SEAL IS PRESENT ON THIS SHEET IT HAS BEEN ELECTRONICALLY SEALED AND DATED.

MISSOURI HIGHWAYS AND TRANSPORTATION COMMISSION
105 WEST CAPITOL
JEFFERSON CITY, MO 65102
1-888-ASK-MODOT (1-888-275-6636)

HDR Engineering, Inc.
1001 Highlands Plaza Drive
Suite 200
St. Louis, MO 63110-1337
314-425-8300
Certificate of Authority: 000856

SIGN	SIZE IN.	AREA SQ.FT.	QTY EACH	TOTAL AREA SQ.FT.	QTY RELOC EACH	TOTAL RELOC SQ.FT.	SIGN NO.	DESCRIPTION
WARNING SIGNS								
WO1-1L	48X48	16.00						TURN (SYMBOL LEFT)
WO1-1R	48X48	16.00						TURN (SYMBOL RIGHT)
WO1-2L	48X48	16.00						CURVE (SYMBOL LEFT)
WO1-2R	48X48	16.00						CURVE (SYMBOL RIGHT)
WO1-3L	48X48	16.00						REVERSE TURN (SYMBOL LEFT)
WO1-3R	48X48	16.00						REVERSE TURN (SYMBOL RIGHT)
WO1-4L	48X48	16.00						REVERSE CURVE (SYMBOL LEFT)
WO1-4R	48X48	16.00						REVERSE CURVE (SYMBOL RIGHT)
WO1-4bL	48X48	16.00						DOUBLE ARROW REVERSE CURVE (SYMBOL LEFT)
WO1-4bR	48X48	16.00						DOUBLE ARROW REVERSE CURVE (SYMBOL RIGHT)
WO1-4cL	48X48	16.00						TRIPLE ARROW REVERSE CURVE (SYMBOL LEFT)
WO1-4cR	48X48	16.00						TRIPLE ARROW REVERSE CURVE (SYMBOL RIGHT)
WO1-6	60X30	12.50						HORIZONTAL ARROW (SYMBOL)
WO1-6a	72X36	18.00						HORIZ. ARROW (SYMBOL ON PERMANENT BARRICADE)
WO1-7	60X30	12.50						DOUBLE HEAD HORIZONTAL ARROW (SYMBOL)
WO1-7a	72X36	18.00						DOUBLE HEAD HORIZ. ARROW (SYMBOL ON PERM. BARR.)
WO1-8	18X24	3.00						CHEVRON (SYMBOL)
WO1-8a	30X36	7.50						CHEVRON (SYMBOL FOR DIVIDED HIGHWAYS)
WO3-1	48X48	16.00						STOP AHEAD (SYMBOL)
WO3-2	48X48	16.00	1	16.00			40	YIELD AHEAD (SYMBOL)
WO3-3	48X48	16.00						SIGNAL AHEAD (SYMBOL)
WO3-4	48X48	16.00						BE PREPARED TO STOP
WO3-5	48X48	16.00						SPEED LIMIT AHEAD
WO4-1L	48X48	16.00						MERGE (SYMBOL FROM LEFT)
WO4-1R	48X48	16.00	1	16.00			19	MERGE (SYMBOL FROM RIGHT)
WO4-1aL	48X48	16.00						MERGE (LEFT)
WO4-1aR	48X48	16.00						MERGE (RIGHT)
WO4-2L	48X48	16.00						LANE ENDS (LEFT)
WO4-2R	48X48	16.00	6	96.00	2	32.00	60	LANE ENDS (RIGHT)
WO5-1	48X48	16.00	1	16.00			43	ROAD/BRIDGE/RAMP NARROWS
WO5-3	48X48	16.00						ONE LANE BRIDGE
WO5-5	48X48	16.00						NARROW LANES
WO6-1	48X48	16.00						DIVIDED HIGHWAY (SYMBOL)
WO6-2	48X48	16.00						DIVIDED HIGHWAY END (SYMBOL)
WO6-3	48X48	16.00						TWO WAY TRAFFIC (SYMBOL)
WO7-3a	30X24	5.00						NEXT XX MILES (PLAQUE)
WO8-1	48X48	16.00						BUMP
WO8-2	48X48	16.00						DIP
WO8-3	48X48	16.00						PAVEMENT ENDS
WO8-4	48X48	16.00						SOFT SHOULDER
WO8-5	48X48	16.00						SLIPPERY WHEN WET (SYMBOL)
WO8-6	48X48	16.00						TRUCK CROSSING
WO8-6c	48X48	16.00						TRUCK ENTRANCE
WO8-7	36X36	9.00						LOOSE GRAVEL
WO8-7a	36X36	9.00						FRESH OIL / LOOSE GRAVEL
WO8-9	48X48	16.00						LOW SHOULDER
WO8-11	48X48	16.00						UNEVEN LANES
WO8-12	48X48	16.00						NO CENTER LINE
WO8-15	48X48	16.00						GROOVED PAVEMENT
WO8-15P	30X24	5.00						MOTORCYCLE (PLAQUE)
WO8-17L	48X48	16.00						SHOULDER DROP-OFF (SYMBOL LEFT)
WO8-17R	48X48	16.00						SHOULDER DROP-OFF (SYMBOL RIGHT)
WO8-17P	30X24	5.00						SHOULDER DROP-OFF (PLAQUE)
W10-1	42RND.	9.62						RAILROAD CROSSING
WO12-1	24X24	4.00						DOUBLE DOWN ARROW (SYMBOL)
WO12-2	48X48	16.00						LOW CLEARANCE (SYMBOL)
Wo12-2x	24X18	3.00						LOW CLEARANCE (PLAQUE)
WO12-2a	84X24	14.00						OVERHEAD LOW CLEARANCE (FEET AND INCHES)
WO12-4	120X60	50.00						LOW CLEARANCE XX FT XX IN XX MILES AHEAD
WO12-5	120X60	50.00						WIDTH RESTRICTION XX FT XX IN XX MILES AHEAD
WO13-1	30X30	6.25						ADVISORY SPEED (PLAQUE)
WO16-2	30X24	5.00						XXX FEET (PLAQUE)
WO16-3	30X24	5.00						X MILE (PLAQUE)
WO20-1	48X48	16.00	3	48.00	7	112.00	2	ROAD/BRIDGE/RAMP WORK AHEAD
WO20-2	48X48	16.00						DETOUR AHEAD
WO20-3	48X48	16.00						ROAD CLOSED AHEAD
WO20-4	48X48	16.00						ONE LANE ROAD AHEAD
WO20-5	48X48	16.00	2	32.00	4	64.00	5	RIGHT/CENTER/LEFT LANE CLOSED AHEAD
WO20-5a	48X48	16.00	2	32.00			5A	2 RIGHT/CENTER/LEFT LANES CLOSED AHEAD
WO20-6a	48X48	16.00	2	32.00			6	RIGHT/CENTER/LEFT LANE CLOSED
WO20-7a	48X48	16.00						FLAGGER (SYMBOL)
WO21-2	36X36	9.00						FRESH OIL
WO21-5	48X48	16.00						SHOULDER WORK / SHOULDER WORK AHEAD
WO21-5a	48X48	16.00	1	16.00			21A	SHOULDER CLOSED
WO21-5b	48X48	16.00	1	16.00			21B	SHOULDER CLOSED AHEAD
WO22-1	48X48	16.00						BLASTING ZONE AHEAD
WO22-2	42X36	10.50						TURN OFF 2-WAY RADIO AND PHONE
WO22-3	42X36	10.50						END BLASTING ZONE
WO24-1R/L	48X48	16.00						REVERSE CURVE
GO22-1	21X15	2.19	2	4.38			65	WET PAINT (ARROW PIVOTS)

SIGN	SIZE IN.	AREA SQ.FT.	QTY EACH	TOTAL SQ.FT.	QTY RELOC EACH	TOTAL RELOC SQ.FT.	SIGN NO.	DESCRIPTION
GUIDE SIGNS								
E05-1	36X48	12.00	1	12.00			49	GORE EXIT
E05-2	48X36	12.00						EXIT OPEN
E05-2a	48X36	12.00						EXIT CLOSED
GO20-1	60X24	10.00	2	20.00			1	ROAD WORK NEXT XX MILES
GO20-2	48X24	8.00	2	16.00			26	END ROAD WORK
GO20-4	36X18	4.50						PILOT CAR FOLLOW ME
GO20-4a	42X30	8.75						PILOT CAR IN USE WAIT & FOLLOW
GO20-4a-1	18X12	1.50						PILOT CAR IN USE WAIT & FOLLOW
GO20-5aP	36X24	6.00	2	12.00			54	WORK ZONE (PLAQUE)
MO4-8a	24X18	3.00						END DETOUR
MO4-9L	48X36	12.00						DETOUR (LEFT)
MO4-9R	48X36	12.00						DETOUR (RIGHT)
MO4-9P	48X12	4.00						STREET NAME (PLAQUE)
MO4-10L	48X18	6.00						DETOUR ARROW (LEFT)
MO4-10R	48X18	6.00						DETOUR ARROW (RIGHT)
REGULATORY SIGNS								
R1-1	48X48	13.25						STOP
R1-2	48TRI.	6.93	1	6.93			13	YIELD
R1-2a	36X36	9.00						TO ONCOMING TRAFFIC (PLAQUE)
R1-3P	30X12	2.50						ALL WAY (PLAQUE)
R2-1	36X48	12.00	2	24.00			4	SPEED LIMIT XX
R3-1	48X48	16.00						NO RIGHT TURN (SYMBOL)
R3-2	48X48	16.00						NO LEFT TURN (SYMBOL)
R3-3	36X36	9.00						NO TURNS
R3-4	48X48	16.00						NO U-TURN (SYMBOL)
R3-7L	30X30	6.25						LEFT LANE MUST TURN LEFT
R3-7R	30X30	6.25						RIGHT LANE MUST TURN RIGHT
R4-1	36X48	12.00						DO NOT PASS
R4-2	36X48	12.00						PASS WITH CARE
R4-7a	36X48	12.00						KEEP RIGHT (HORIZONTAL ARROW)
R4-8a	36X48	12.00						KEEP LEFT (HORIZONTAL ARROW)
R5-1	30X30	6.25						DO NOT ENTER
R5-1a	36X24	6.00						WRONG WAY
R6-1L	54X18	6.75						ONE WAY ARROW (LEFT)
R6-1R	54X18	6.75						ONE WAY ARROW (RIGHT)
R6-2L	24X30	5.00						ONE WAY (LEFT)
R6-2R	24X30	5.00						ONE WAY (RIGHT)
R9-9	24X12	2.00						SIDEWALK CLOSED
R9-11L	24X18	3.00						SIDEWALK CLOSED AHEAD, (ARROW LEFT) CROSS HERE
R9-11R	24X18	3.00						SIDEWALK CLOSED AHEAD, (ARROW RIGHT) CROSS HERE
R10-6	24X36	6.00						STOP HERE ON RED (45^ ARROW)
R11-2	48X30	10.00						ROAD CLOSED
R11-3a	60X30	12.50						ROAD CLOSED XX MILES AHEAD LOCAL TRAFFIC ONLY
R11-4	60X30	12.50						ROAD CLOSED TO THRU TRAFFIC
CONST-3A	60X48	20.00						FINE SIGN
CONST-3X	56X12	4.67						SPEEDING/PASSING (PLATE)
MISCELLANEOUS SIGNS								
CONST-5	48X36	12.00	1	12.00			57	POINT OF PRESENCE
CONST-8	48X36	12.00	2	24.00			59	WORK ZONE NO PHONE ZONE

	TOTAL
616-10.05 CONSTRUCTION SIGNS	452
616-10.10 RELOCATED SIGNS	**

NOTE: QUANTITES PROVIDED ARE SETUP USING GENERIC TRAFFIC CONTROL. IF THE CONTRACTOR CHOOSES TO SETUP TRAFFIC CONTROL DIFFERENTLY, THEN THOSE ADDITIONAL QUANTITIES SHALL BE PAID AT THE EXPENSE OF THE CONTRACTOR.

NOTE: ALL TRAFFIC CONTROL ITEMS ARE INCLUDED IN PAY ITEM 616-99.01, LUMP SUM TEMPORARY TRAFFIC CONTROL, UNLESS NOTED OTHERWISE IN THE PLANS. THESE QUANTITIES ARE ONLY AN ESTIMATE & ARE SUBJECT TO CHANGE BASED UPON FIELD CONDITIONS.

ITEM NUMBER	TOTAL QTY	DESCRIPTION
		EFFECTIVE: 07-01-2025
6122008		IMPACT ATTENUATOR 40 MPH (SAND BARRELS)
6122009		IMPACT ATTENUATOR 45 MPH (SAND BARRELS)
6122010		IMPACT ATTENUATOR 50 MPH (SAND BARRELS)
6122012		IMPACT ATTENUATOR 55 MPH (SAND BARRELS)
6122014		IMPACT ATTENUATOR 60 MPH (SAND BARRELS)
6122017		IMPACT ATTENUATOR 65 MPH (SAND BARRELS)
6122019		IMPACT ATTENUATOR 70 MPH (SAND BARRELS)
6122020		REPLACEMENT SAND BARREL
6122030		IMPACT ATTENUATOR (RELOCATION)
6122040		WORK ZONE CRASH CUSHION (NARROW)
6122041		WORK ZONE CRASH CUSHION (RELOCATION)
6123001	1	* TRUCK MOUNTED ATTENUATOR (TMA)
6161012		BUOYS (BOATS KEEP OUT)
6161013		BUOYS (NO WAKE)
6161014		SPECIAL SIGN ASSEMBLY (BOATS KEEP OUT)
6161020		CHANNELIZER (DRUM-LIKE)
6161022		CHANNELIZER (CONE)
6161025	200	CHANNELIZER (TRIM-LINE)
6161026		CHANNELIZER (VERTICAL PANEL)
6161030		TYPE 3 MOVEABLE BARRICADE
6161033	100	DIRECTION INDICATOR BARRICADE
6161040	4	FLASHING ARROW PANEL
6161047		TYPE 3 OBJECT MARKER
6161055		SEQUENTIAL FLASHING WARNING LIGHT
6161070		TUBULAR MARKER
6161095		RADAR SPEED ADVISORY SYSTEM
6161096		CHANGEABLE MESSAGE SIGN, COMMISSION FURNISHED/RETAINED
6161098A	2	* CHANGEABLE MESSAGE SIGN WITHOUT COMM. INTERFACE, CONTRACTOR FURNISHED/RETAINED
6161099		CHANGEABLE MESSAGE SIGN WITH COMM. INTERFACE, CONTRACTOR FURNISHED/RETAINED
6162000A		WORK ZONE TRAFFIC SIGNAL SYSTEM
6162002		TEMPORARY LONG-TERM RUMBLE STRIPS
6173600D	12784	* TEMPORARY TRAFFIC BARRIER, CONTRACTOR FURNISHED/RETAINED
6173700B		TEMP. TRAFFIC BARRIER ANCHORED, CONTRACTOR FURNISHED/RETAINED
6173706		TEMP. TRAFFIC BARRIER STIFFNESS TRANSITION CONTRACTOR FURNISHED/RETAINED
6174000A		TEMP. TRAFFIC BARRIER HEIGHT TRANSITION, CONTRACTOR FURNISHED/RETAINED
6175010A		RELOCATING TEMPORARY TRAFFIC BARRIER
6175011B		RELOCATING TEMP. TRAFFIC BARRIER ANCHORED
6175013		RELOCATING TEMP. TRAFFIC BARRIER STIFFNESS
6175020A		RELOCATING TEMP. TRAFFIC BARRIER HEIGHT
6208064A		TEMPORARY RAISED PAVEMENT MARKER
9029400		TEMPORARY TRAFFIC SIGNALS
9029401		TEMPORARY TRAFFIC SIGNALS AND LIGHTING

NOTE: CMS LOCATIONS TO BE APPROVED BY THE ENGINEER.
COST OF FLAG ASSEMBLY IS INCLUDED IN SIGN COST.
* ITEMS NOT INCLUDED IN LUMP SUM TRAFFIC CONTROL.
** NO DIRECT PAY FOR RELOCATING TEMPORARY TRAFFIC CONTROL DEVICES.

TEMPORARY TRAFFIC CONTROL
PAY TOTAL: 1 LUMP SUM

SUMMARY OF QUANTITIES
SHEET 3 OF 3

STATE OF MISSOURI
EUGENE LOUIS KUEBLER JR.
NUMBER PE-2010000912
PROFESSIONAL ENGINEER

THIS SHEET HAS BEEN SIGNED, SEALED, AND DATED ELECTRONICALLY.

DATE PREPARED: 3/25/2026
ROUTE: I-270 | STATE: MO
DISTRICT: SL | SHEET NO.: 3
COUNTY: ST. LOUIS
JOB NO.: J6I3580B
CONTRACT ID.:
PROJECT NO.:
BRIDGE NO.:

DESCRIPTION | DATE

MISSOURI HIGHWAYS AND TRANSPORTATION COMMISSION
105 WEST CAPITOL
JEFFERSON CITY, MO 65102
1-888-ASK-MODOT (1-888-275-6636)

HDR Engineering, Inc.
1001 Highlands Plaza Drive
Suite 200
St. Louis, MO 63110-1337
314-425-8300
Certificate of Authority: 000856

IF A SEAL IS PRESENT ON THIS SHEET IT HAS BEEN ELECTRONICALLY SEALED AND DATED.

GENERAL NOTES:

1. ANY WORK INDICATED ON THE PLANS THAT EXTENDS BEYOND THE PROJECT LIMITS IS CONSIDERED INCIDENTAL TO AND A PART OF THE CONSTRUCTION OF THIS PROJECT.
2. ALL BEARINGS ARE BASED ON STATE PLANS BEARINGS, EASTERN ZONE.
3. ALL STATIONS AND OFFSETS ARE FROM ℄ EXIST. I-270 UNLESS NOTED.
4. ALL PROPOSED WORK ON I-270 TO FOLLOW THE EXISTING PROFILE OF I-270.
5. IT IS ANTICIPATED THAT CONSTRUCTION OF THE PROPOSED IMPROVEMENTS OF J6I3580B WILL FOLLOW JSL0021 AND J6I3020D. AS SUCH, THE PROPOSED WORK OF THE AFOREMENTIONED PROJECTS ARE REPRESENTED AS EXISTING SURVEY WITHIN THESE PLANS.

SCALE
0 50 100 150

09F310049
STATE OF MISSOURI
DB 02938, PG 0024

MATCHLINE STA 624+00 EXIST. I-270

BEGIN PROPOSED MILL & OVERLAY STA 10+87.86 ℄ EXIST. RAMP 8-G

RAMP 8-G

N53°51'26"W

MO 367 FLYOVER RAMP

PT STA 6+73.09

℄ EXIST. DUNN RD

DUNN RD

EX. ROW

℄ EXIST. RAMP 8-G

BEGIN PROPOSED MILL & OVERLAY, AND TYPE C BARRIER. TIE INTO JSL0021 STA 615+75.00

EX. INLET (UIP)

PC STA 2+22.05

N89°54'40"W

BRIDGE A9490

BRIDGE A9489

℄ EXIST. I-270

I-270 WB

I-270 EB

S89°54'40"E

S89°58'30"E

℄ EXIST. RAMP 8-F

RAMP 8-F

PT STA 19+51.88

EX. ROW

BEGIN PROPOSED MILL & OVERLAY STA 13+23.82 ℄ EXIST. RAMP 8-F

PC STA 13+30.00

10F610020
DEPT OF PUBLIC HEALTH & WELFARE
DB 71948, PG 0167

10F610031
DEPT OF PUBLIC HEALTH & WELFARE
DB 71948, PG 0167

10F610021
DEPT OF PUBLIC HEALTH & WELFARE
DB 71948, PG 0167

LEGEND

PROPOSED MILL & OVERLAY

I-270 ROADWAY PLAN
STA 610+50 TO STA 624+00
SHEET 1 OF 10

STATE OF MISSOURI
EUGENE LOUIS KUEKER JR.
NUMBER PE-2010000912
PROFESSIONAL ENGINEER

THIS SHEET HAS BEEN SIGNED, SEALED, AND DATED ELECTRONICALLY.

IF A SEAL IS PRESENT ON THIS SHEET IT HAS BEEN ELECTRONICALLY SEALED AND DATED.

DATE PREPARED: 3/25/2026

ROUTE	STATE
I-270	MO
DISTRICT	SHEET NO.
SL	4

COUNTY: ST. LOUIS
JOB NO.: J6I3580B
CONTRACT ID.:
PROJECT NO.:
BRIDGE NO.:

DATE	DESCRIPTION

MISSOURI HIGHWAYS AND TRANSPORTATION COMMISSION

105 WEST CAPITOL
JEFFERSON CITY, MO 65102
1-888-ASK-MODOT (1-888-275-6636)

HDR Engineering, Inc.
1001 Highlands Plaza Drive
Suite 200
St. Louis, MO 63110-1337
314-425-8300
Certificate of Authority: 000856

09F310049
STATE OF MISSOURI
DB 02938, PG 0024

09F320026
CHAPTER 100 ST LOUIS COUNTY
DB 18667, PG 3326

MATCHLINE STA 624+00 EXIST. I-270

START STA 0+00.00

EX. ROW

℄ EXIST. DUNN RD

DUNN RD

EX. INLET (UIP)

℄ EXIST. RAMP 8-G

PROPOSED TYPE C BARRIER

EX. INLET (UIP)

℄ EXIST. I-270

I-270 WB

I-270 EB

S89°54'40"E

S89°58'30"E

N88°11'32"E

75+

℄ EXIST. RAMP 8-F

POT STA 23+51.88

END STA 26+02.01

EX. ROW

MATCHLINE STA 637+50 EXIST. I-270

10F610021
DEPT OF PUBLIC HEALTH & WELFARE
DB 71948, PG 0167

SCALE
0 50 100 150

LEGEND
PROPOSED MILL & OVERLAY

I-270 ROADWAY PLAN
STA 624+00 TO STA 637+50
SHEET 2 OF 10

STATE OF MISSOURI
EUGENE LOUIS KUEKER JR.
NUMBER PE-2010009912
PROFESSIONAL ENGINEER

THIS SHEET HAS BEEN SIGNED, SEALED, AND DATED ELECTRONICALLY.

IF A SEAL IS PRESENT ON THIS SHEET IT HAS BEEN ELECTRONICALLY SEALED AND DATED.

DATE PREPARED	
3/25/2026	
ROUTE	STATE
I-270	MO
DISTRICT	SHEET NO.
SL	5
COUNTY	
ST. LOUIS	
JOB NO.	
J6I3580B	
CONTRACT ID.	
PROJECT NO.	
BRIDGE NO.	

DATE	DESCRIPTION

MISSOURI HIGHWAYS AND TRANSPORTATION COMMISSION
105 WEST CAPITOL
JEFFERSON CITY, MO 65102
1-888-ASK-MODOT (1-888-275-6636)

HDR Engineering, Inc.
1001 Highlands Plaza Drive
Suite 200
St. Louis, MO 63110-1337
314-425-8300
Certificate of Authority: 000856

09E110192
STELLCO ENTERPRISES LLC
DB 22854, PG 3522

EX. ROW

10E430061
1703 DUNN LLC
DB 20575, PG 1285

10E430050
BESSELMAN
KAREN ETAL
DB 18642, PG 4266

10E430041
BESSELMAN
KAREN ETAL
DB 18642,
PG 4266

MATCHLINE STA 637+50 EXIST. I-270

MATCHLINE STA 649+50 EXIST. I-270

EX. ROW

℄ EXIST.
DUNN RD

DUNN RD

EX. ROW

640

645

EQUATION:
STA 642+17.06 BK =
STA 640+97.00

PC STA 642+45.26 R3

℄ EXIST. I-270

EX. INLET (UIP)

PROPOSED TYPE C BARRIER

I-270 WB

I-270 EB

S89°54'40"E

EX. INLET (UIP)

EX. INLET (UIP)

EX. INLET (UIP)

S82°15'31"E

START STA 0+00.00

PT STA 3+81.22

PC STA 5+82.60

℄ EXIST. RAMP 2

EX. ROW

0

5

10F610021
DEPT OF PUBLIC HEALTH & WELFARE
DB 71948, PG 0167

10F610021
DEPT OF PUBLIC HEALTH & WELFARE
DB 71948, PG 0167

10E420031
DEPT OF PUBLIC HEALTH
& WELFARE
DB 71948, PG 0167

SCALE
0 50 100 150

LEGEND
PROPOSED MILL & OVERLAY

I-270 ROADWAY PLAN
STA 637+50 TO STA 649+50
SHEET 3 OF 10

STATE OF MISSOURI
EUGENE LOUIS KUEKER JR.
NUMBER PE-2011000912
PROFESSIONAL ENGINEER

THIS SHEET HAS BEEN SIGNED, SEALED, AND DATED ELECTRONICALLY.

DATE PREPARED
3/25/2026

ROUTE	STATE
I-270	MO

DISTRICT	SHEET NO.
SL	6

COUNTY
ST. LOUIS

JOB NO.
J6I3580B

CONTRACT ID.

PROJECT NO.

BRIDGE NO.

DESCRIPTION	DATE

IF A SEAL IS PRESENT ON THIS SHEET IT HAS BEEN ELECTRONICALLY SEALED AND DATED.

MISSOURI HIGHWAYS AND TRANSPORTATION COMMISSION

105 WEST CAPITOL
JEFFERSON CITY, MO 65102
1-888-ASK-MODOT (1-888-275-6636)

HDR Engineering, Inc.
1001 Highlands Plaza Drive
Suite 200
St. Louis, MO 63110-1337
314-425-8300
Certificate of Authority: 000856

c:\pwworking\central01\d5178262\006_PL03_J6I3580B_I50_I-270.dgn 1:50:35 PM 3/25/2026

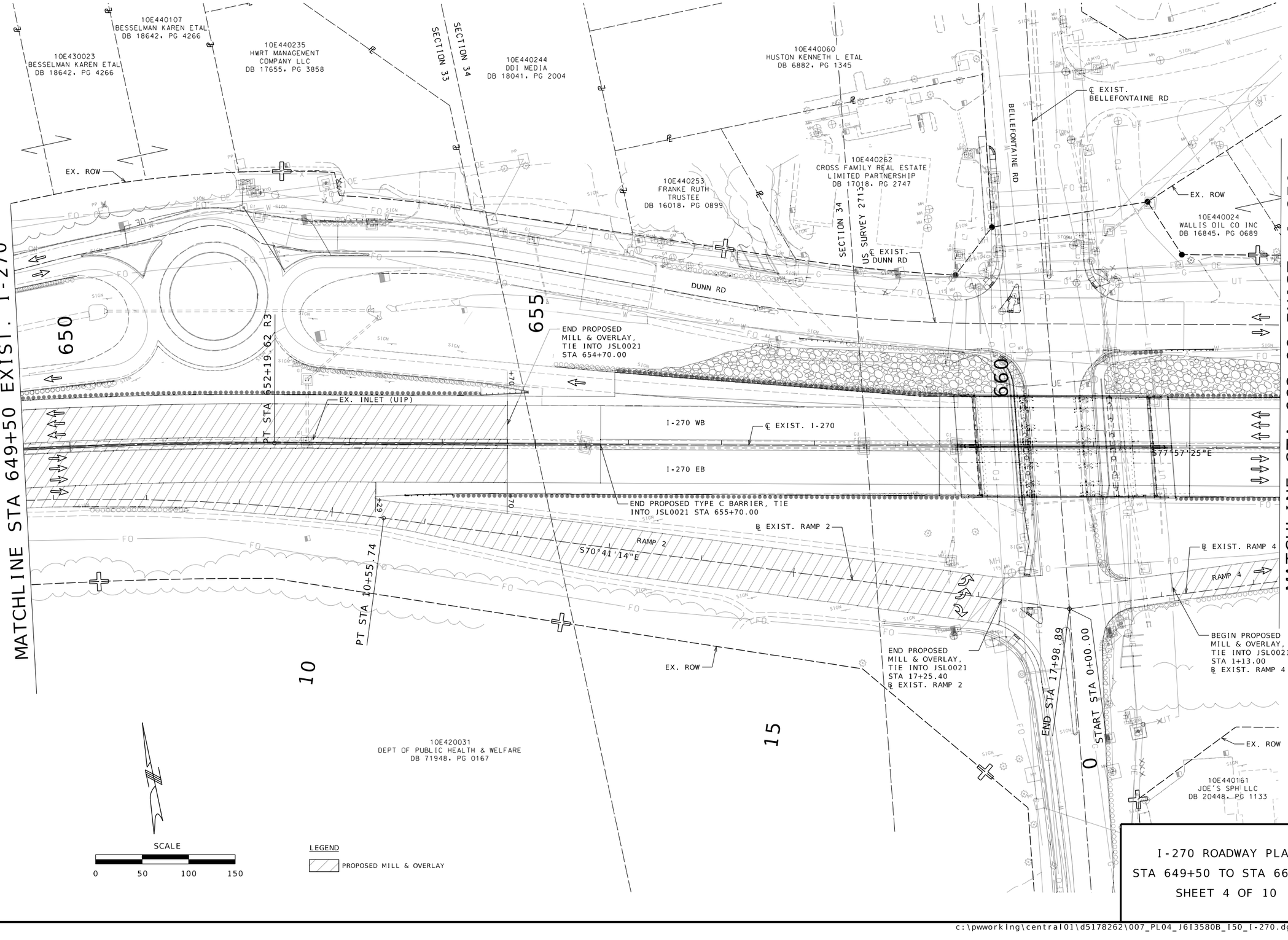

I-270 ROADWAY PLAN
STA 649+50 TO STA 663+00
SHEET 4 OF 10

STATE OF MISSOURI
EUGENE LOUIS KUEKER JR.
NUMBER PE-2010009912
PROFESSIONAL ENGINEER

THIS SHEET HAS BEEN SIGNED, SEALED, AND DATED ELECTRONICALLY.

IF A SEAL IS PRESENT ON THIS SHEET IT HAS BEEN ELECTRONICALLY SEALED AND DATED.

DATE PREPARED	
3/25/2026	
ROUTE	STATE
I-270	MO
DISTRICT	SHEET NO.
SL	7
COUNTY	
ST. LOUIS	
JOB NO.	
J6I3580B	
CONTRACT ID.	
PROJECT NO.	
BRIDGE NO.	

DATE	DESCRIPTION

MISSOURI HIGHWAYS AND TRANSPORTATION COMMISSION
105 WEST CAPITOL
JEFFERSON CITY, MO 65102
1-888-ASK-MODOT (1-888-275-6636)

HDR Engineering, Inc.
1001 Highlands Plaza Drive
Suite 200
St. Louis, MO 63110-1337
314-425-8300
Certificate of Authority: 000856

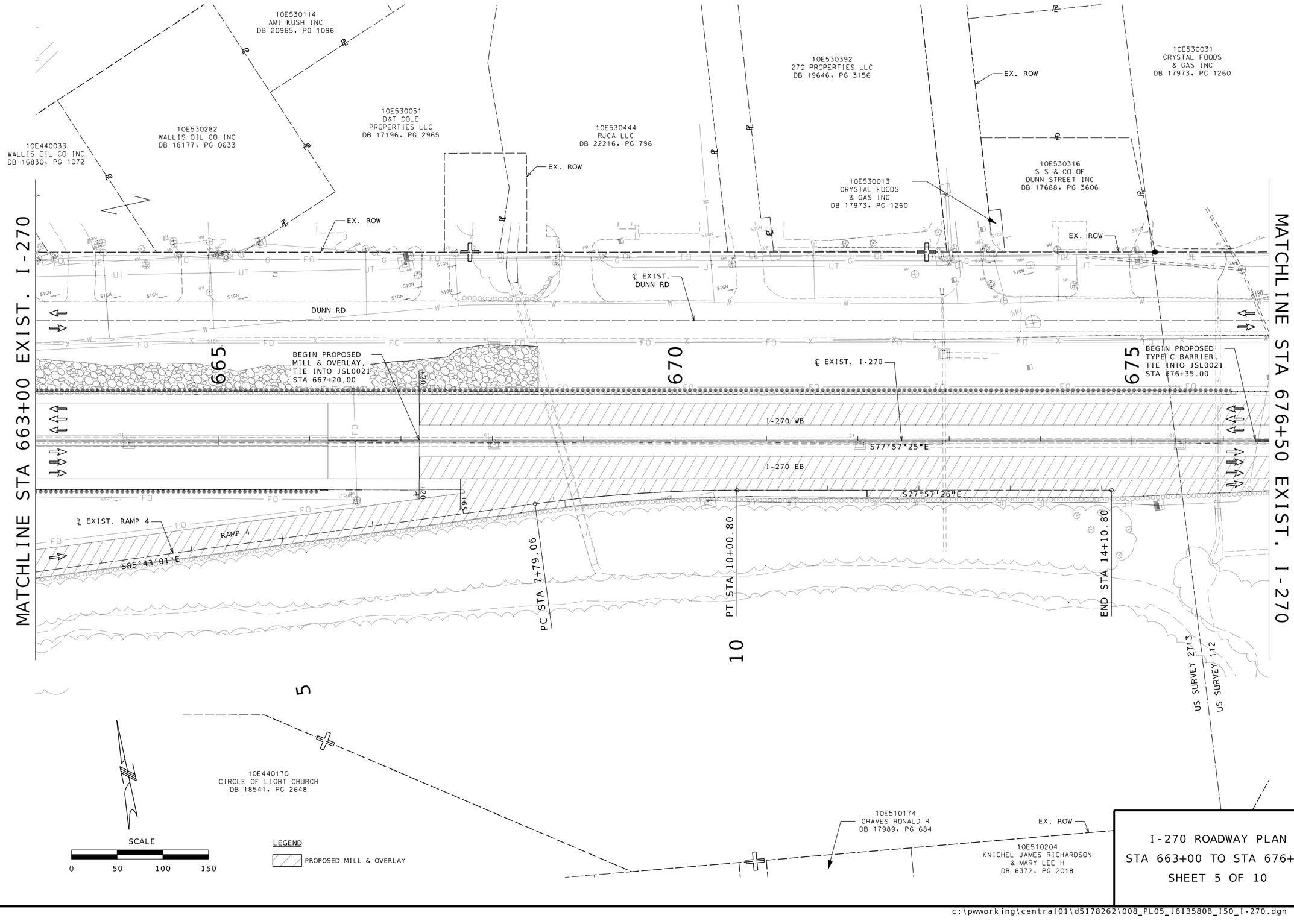

I-270 ROADWAY PLAN
STA 663+00 TO STA 676+50
SHEET 5 OF 10

STATE OF MISSOURI
EUGENE LOUIS KUEKER JR.
NUMBER PE-2010000912
PROFESSIONAL ENGINEER
THIS SHEET HAS BEEN SIGNED, SEALED, AND DATED ELECTRONICALLY.

IF A SEAL IS PRESENT ON THIS SHEET IT HAS BEEN ELECTRONICALLY SEALED AND DATED.

DATE PREPARED	3/25/2026
ROUTE	STATE
I-270	MO
DISTRICT	SHEET NO.
SL	8
COUNTY	ST. LOUIS
JOB NO.	J6I3580B
CONTRACT ID.	
PROJECT NO.	
BRIDGE NO.	

DESCRIPTION	DATE

MISSOURI HIGHWAYS AND TRANSPORTATION COMMISSION
105 WEST CAPITOL
JEFFERSON CITY, MO 65102
1-888-ASK-MODOT (1-888-275-6636)

HDR Engineering, Inc.
1001 Highlands Plaza Drive
Suite 200
St. Louis, MO 63110-1337
314-425-8300
Certificate of Authority: 000856

MATCHLINE STA 676+50 EXIST. I-270

MATCHLINE STA 690+00 EXIST. I-270

10E530031
CRYSTAL FOODS
& GAS INC
DB 17973, PG 1260

10E540072
PFITZNER EBERHARD
REV LIVING TRUST
DB 21885, PG 410

10E540061
ADAMS JOHN G
PATRICIA A H/W
DB 08611, PG 2437

10E540050
MASON DONNY RAY
& JO ANN H/W
DB 21734, PG 1624

10E540032
BUSKEN CONSTRUCTION
COMPANY
DB 13571, PG 2060

10E540344
USI 270 LP
DB 09197, PG 0212

10E630205
CORGAF LLC
DB 20532, PG 5022

SCALE
0 50 100 150

EX. ROW

DUNN RD

680

685

℄ EXIST.
DUNN RD

EX. ROW

END PROPOSED MILL & OVERLAY,
MATCH EXISTING STA 684+72.00

I-270 WB

S77°57'25"E

I-270 EB

END PROPOSED MILL &
OVERLAY, MATCH EXISTING
STA 684+79.00

℄ EXIST. I-270

PROPOSED TYPE C BARRIER

PERSHALL RD

EX. ROW

EX. ROW

10E510163
RAFTERY
GREGORY D
DB 21965,
PG 348

10E520074
B&P PARTNERSHIP LLC
DB 18041, PG 1287

10E520113
WEISE MICHAEL G
& MCLAUGHLIN SUSAN H/W TRS
DB 17818, PG 1039

10E520041
WEISE MICHAEL G
& MCLAUGHLIN SUSAN H/W TRS
DB 21528, PG 374

10E510163
RAFTERY GREGORY D
DB 21965, PG 354

10E520063
RAFTERY GREGORY D
DB 21472, PG 3523

LEGEND

PROPOSED MILL & OVERLAY

I-270 ROADWAY PLAN
STA 676+50 TO STA 690+00
SHEET 6 OF 10

STATE OF MISSOURI
EUGENE LOUIS KUEKER JR.
NUMBER PE-2010009912
PROFESSIONAL ENGINEER

THIS SHEET HAS BEEN SIGNED, SEALED, AND DATED ELECTRONICALLY.

IF A SEAL IS PRESENT ON THIS SHEET IT HAS BEEN ELECTRONICALLY SEALED AND DATED.

DATE PREPARED
3/25/2026

ROUTE	STATE
I-270	MO

DISTRICT	SHEET NO.
SL	9

COUNTY
ST. LOUIS

JOB NO.
J6I3580B

CONTRACT ID.

PROJECT NO.

BRIDGE NO.

DESCRIPTION	DATE

MISSOURI HIGHWAYS AND TRANSPORTATION COMMISSION

105 WEST CAPITOL
JEFFERSON CITY, MO 65102
1-888-ASK-MODOT (1-888-275-6636)

HDR Engineering, Inc.
1001 Highlands Plaza Drive
Suite 200
St. Louis, MO 63110-1337
314-425-8300
Certificate of Authority: 000856

MATCHLINE STA 690+00 EXIST. I-270

MATCHLINE STA 703+50 EXIST. I-270

10E630205
CORGAF LLC
DB 20532, PG 5022

BNSF ROW

BURLINGTON NORTHERN SANTA FE RAILROAD

BNSF ROW

10E630021
SCHUCKMANN ORNAMENTAL
IRON LLC
DB 07964, PG 1371

10E630214
VELTEN ADOLPHUS LLC
DB 13026, PG 1842

10E610175
VELTEN
ADOLPHUS
LLC
DB 19016,
PG 986

EX. ROW

℄ EXIST.
DUNN RD

DUNN RD

END PROP. TYPE C
BARRIER, TIE INTO
BRIDGE STA 694+81.00

MODOT
BRIDGE
ATTACHMENT

695

15

END STA 15+03.73

700

10

PT STA 11+03.73

℄ EXIST.
RAMP 1

N77°41'45"W

BEGIN MILL & OVERLAY, MATCH
EXISTING STA 698+26.00

I-270 WB

BEGIN PROP. TYPE C
BARRIER, TIE INTO
BRIDGE STA 696+58.00

S77°57'25"E

PC STA 701+64.15 RB

END PROPOSED TYPE C BARRIER,
TIE INTO J613020D, STA
702+04.00. BEGIN FULL DEPTH
PAVEMENT (J613020D)

BEGIN MILL & OVERLAY, MATCH
EXISTING STA 697+26.00

I-270 EB

℄ EXIST. I-270

℄ EXIST.
RAMP 2

PERSHALL RD

START STA 0+00.00

0

EX. ROW

EX. ROW

10E520041
WEISE MICHAEL G
& MCLAUGHLIN SUSAN H/W TRS
DB 21528, PG 374

BNSF ROW

BURLINGTON NORTHERN SANTA FE RAILROAD

BNSF ROW

10E610142
MISSISSIPPI VALLEY
EQUIPMENT COMPANY
DB 19313, PG 4511

10E610186
THE HOME CITY
ICE COMPANY
DB 20021, PG 3315

10E610197
THE HOME CITY
ICE COMPANY
DB 20021, PG 3315

10E610111
THE HOME CITY
ICE COMPANY
DB 20253, PG 2622

SCALE
0 50 100 150

LEGEND
PROPOSED MILL & OVERLAY

I-270 ROADWAY PLAN
STA 690+00 TO STA 703+50
SHEET 7 OF 10

STATE OF MISSOURI
EUGENE LOUIS KUEKER JR.
NUMBER PE-2010009912
PROFESSIONAL ENGINEER

THIS SHEET HAS BEEN SIGNED, SEALED, AND DATED ELECTRONICALLY.

IF A SEAL IS PRESENT ON THIS SHEET IT HAS BEEN ELECTRONICALLY SEALED AND DATED.

DATE PREPARED
3/25/2026

ROUTE	STATE
I-270	MO

DISTRICT	SHEET NO.
SL	10

COUNTY
ST. LOUIS

JOB NO.
J6I3580B

CONTRACT ID.

PROJECT NO.

BRIDGE NO.

DATE	DESCRIPTION

MISSOURI HIGHWAYS AND TRANSPORTATION COMMISSION
105 WEST CAPITOL
JEFFERSON CITY, MO 65102
1-888-ASK-MODOT (1-888-275-6636)

HDR Engineering, Inc.
1001 Highlands Plaza Drive
Suite 200
St. Louis, MO 63110-1337
314-425-8300
Certificate of Authority: 000856

LEGEND

PROPOSED MILL & OVERLAY

SCALE

0 50 100 150

MATCHLINE STA 703+50 EXIST. I-270

MATCHLINE STA 717+00 EXIST. I-270

EX. ROW

10E640141
COLEMAN FAMILY
LIMITED PARTNERSHIP
DB 8897, PG 1442

10E610112
VELTEN ADOLPHUS LLC
DB 19016, PG 979

10D430105
UNITED STATE
POSTAL SERVICE
DB 10838, PG 1954

℄ EXIST. DUNN RD

DUNN RD

PC STA 6+30.10

START STA 0+04.12

END STA 14+26.56

LILAC AVE

END PROPOSED
MILL & OVERLAY,
TIE INTO J6I3020D
STA 0+72.00
℄ EXIST RAMP 1

END PROPOSED
MILL & OVERLAY,
TIE INTO J6I3020D
STA 13+53.00
℄ EXIST RAMP 3

S80°59'36"W

RAMP 1

℄ EXIST. RAMP 1

US SURVEY 112

US SURVEY 2007

N82°15'47"W

RAMP 3

℄ EXIST. RAMP 3

PT STA 712+78.60

℄ EXIST. LILAC AVE

℄ EXIST. I-270

I-270 WB

I-270 EB

N87°11'37"E

PT STA 5+43.11

S75°31'30"E

RAMP 2

℄ EXIST. RAMP 2

END PROPOSED
MILL & OVERLAY,
TIE INTO J6I3020D
STA 12+92.00
℄ EXIST RAMP 2

℄ EXIST. RAMP 4

℄ EXIST. LILAC AVE

RAMP 4

N74°37'36"E

END PROPOSED
MILL & OVERLAY,
TIE INTO J6I3020D
STA 0+75.00
℄ EXIST RAMP 4

PERSHALL RD

EX. ROW

END STA 13+65.54

START STA 0+03.74

10E610203
ROADSIDE TRAILER
SERVICES INC
DB 22562, PG 350

10E620042
1150 PERSHALL ROAD LLC
DB 20526, PG 2264

10E620141
QUICKTRIP CORPORATION
DB 20386, PG 1039

10E620130
RV INDUSTRIES LLC
DB 19704, PG 1972

10D410097
NUCOR HARRIS
HOLDINGS INC
DB 22678, PG 2759

10E620075
WESTERN OIL INC
DB 12813, PG 0958

705 710 715

5 10

I-270 ROADWAY PLAN
STA 703+50 TO STA 717+00
SHEET 8 OF 10

STATE OF MISSOURI
EUGENE LOUIS KUEKER JR.
NUMBER PE-2010009912
PROFESSIONAL ENGINEER

THIS SHEET HAS BEEN SIGNED, SEALED, AND DATED ELECTRONICALLY.

IF A SEAL IS PRESENT ON THIS SHEET IT HAS BEEN ELECTRONICALLY SEALED AND DATED.

DATE PREPARED: 3/25/2026

ROUTE	STATE
I-270	MO
DISTRICT	SHEET NO.
SL	11

COUNTY: ST. LOUIS

JOB NO.: J6I3580B

CONTRACT ID.

PROJECT NO.

BRIDGE NO.

DESCRIPTION	DATE

MISSOURI HIGHWAYS AND TRANSPORTATION COMMISSION

105 WEST CAPITOL
JEFFERSON CITY, MO 65102
1-888-ASK-MODOT (1-888-275-6636)

HDR Engineering, Inc.
1001 Highlands Plaza Drive
Suite 200
St. Louis, MO 63110-1337
314-425-8300
Certificate of Authority: 000856

c:\pwworking\central01\d5178262\011_PL08_J6I3580B_I50_I-270.dgn 1:51:13 PM 3/25/2026

MATCHLINE STA 717+00 EXIST. I-270

MATCHLINE STA 730+50 EXIST. I-270

EX. ROW

10D430224
PR RT II LLC
DB 20926, PG 2186

10D440225
RIVER TRACE LLC
DB 22920, PG 829

℄ EXIST. RAMP 3

N82°15'47"W

RAMP 3

PT STA 5+84.37

PC STA 3+51.04

START STA 0+00.00

DUNN RD

℄ EXIST.DUNN RD

℄ EXIST. I-270

S89°34'18"W

I-270 WB

N87°11'37"E

I-270 EB

N86°52'15"E

N85°57'05"E

RAMP 4

N74°37'36"E

℄ EXIST. RAMP 4

PC STA 7+09.05

PTI STA 9+13.22

POT STA 13+13.22

END STA 15+63.26

PERSHALL RD

EX. ROW

EX. ROW

10D410097
NUCOR HARRIS HOLDINGS INC
DB 22678, PG 2759

10D410086
REPUBLIC OF PRESTON LLC
DB 21402, PG 2259

10D420104
TEMPLE OF PRAISE CHURCH
DB 19022, PG 709

10D420096
DDI MEDIA
DB 17364,
PG 2298

LEGEND

PROPOSED MILL & OVERLAY

SCALE

0 50 100 150

I-270 ROADWAY PLAN
STA 717+00 TO STA 730+50
SHEET 9 OF 10

STATE OF MISSOURI
EUGENE LOUIS KUEKER JR.
NUMBER PE-2010000912
PROFESSIONAL ENGINEER

THIS SHEET HAS BEEN SIGNED, SEALED, AND DATED ELECTRONICALLY.

IF A SEAL IS PRESENT ON THIS SHEET IT HAS BEEN ELECTRONICALLY SEALED AND DATED.

DATE PREPARED
3/25/2026

ROUTE	STATE
I-270	MO
DISTRICT	SHEET NO.
SL	12

COUNTY
ST. LOUIS

JOB NO.
J6I3580B

CONTRACT ID.

PROJECT NO.

BRIDGE NO.

DESCRIPTION	DATE

MISSOURI HIGHWAYS AND TRANSPORTATION COMMISSION
105 WEST CAPITOL
JEFFERSON CITY, MO 65102
1-888-ASK-MODOT (1-888-275-6636)

HDR Engineering, Inc.
1001 Highlands Plaza Drive
Suite 200
St. Louis, MO 63110-1337
314-425-8300
Certificate of Authority: 000856

c:\pwworking\central01\d5178262\012_PL09_J6I3580B_I50_I-270.dgn 1:51:20 PM 3/25/2026

MATCHLINE STA 730+50 EXIST. I-270

10D440225
RIVER TRACE LLC
DB 22920, PG 829

10D440023
BRANGER JOE A
DB 22781, PG 732

10D420074
PATTERSON KENNETH R
MATTIE F H/W
DB 10744, PG 2274

10D510098
BLACKMON KYLE R
& DALE REVANS H/W
DB 10961, PG 1452

SCALE
0 50 100 150

EX. ROW

℄ EXIST. DUNN RD

DUNN RD

US SURVEY 2007

US SURVEY 114

735

740

END PROPOSED MILL & OVERLAY, TIE INTO J6I3020C
STA 738+60.00 (J6I3020D) = STA 739+99.48 (J6I3020C)

I-270 WB

I-270 EB

℄ EXIST. I-270

N87°11'37"E

+00

+72

+60

+60

END CROWN TRANSITION
23'-0", LT/RT STA 738+60.00
(J6I3020D) = STA 739+99.48
(J6I3020C)

BEGIN CROWN TRANSITION
17'-6", LT/RT STA 738+30.00

PERSHALL RD

EVERSTREAM

EX. ROW

EX. ROW

10D420122
ADOLPHUS MARK
DB 17353, PG 3088

10D420104
TEMPLE OF PRAISE CHURCH
DB 19022, PG 709

10D420030
FAITH MIRACLE TEMPLE CHURCH OF GOD
DB 21304, PG 1815

LEGEND

PROPOSED MILL & OVERLAY

I-270 ROADWAY PLAN
STA 730+50 TO STA 744+00
SHEET 10 OF 10

STATE OF MISSOURI
EUGENE LOUIS KUEKER JR.
NUMBER PE-2010000912
PROFESSIONAL ENGINEER

THIS SHEET HAS BEEN SIGNED, SEALED, AND DATED ELECTRONICALLY.

IF A SEAL IS PRESENT ON THIS SHEET IT HAS BEEN ELECTRONICALLY SEALED AND DATED.

DATE PREPARED
3/25/2026

ROUTE	STATE
I-270	MO
DISTRICT	SHEET NO.
SL	13

COUNTY
ST. LOUIS

JOB NO.
J6I3580B

CONTRACT ID.

PROJECT NO.

BRIDGE NO.

DESCRIPTION	DATE

MISSOURI HIGHWAYS AND TRANSPORTATION COMMISSION

105 WEST CAPITOL
JEFFERSON CITY, MO 65102
1-888-ASK-MODOT (1-888-275-6636)

HDR Engineering, Inc.
1001 Highlands Plaza Drive
Suite 200
St. Louis, MO 63110-1337
314-425-6300
Certificate of Authority: 000856

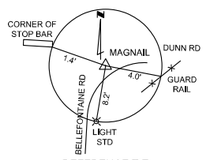

REFERENCE TIE

CONTROL POINT #1
N 1069465.807
E 899933.620
ELEV 480.30
MAGNAIL IN ASPH; ON THE SOUTHEAST CORNER OF THE INTERSECTION OF DUNN RD AND BELLEFONTAINE RD, ON THE EAST SIDE OF BELLEFONTAINE RD

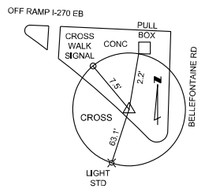

REFERENCE TIE

CONTROL POINT #2
N 1069215.931
E 899828.379
ELEV 482.34
CROSS IN CONC; ON THE SOUTHWEST CORNER OF THE INTERSECTION OF I-270 OFF RAMP AND BELLEFONTAINE RD, ON THE WEST SIDE OF BELLEFONTAINE RD

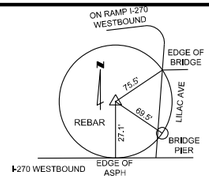

REFERENCE TIE

CONTROL POINT #3
N 1068517.685
E 904895.330
ELEV 493.08
REBAR WITH CAP IN GRASS; APPROX 380 FEET SOUTH OF THE INTERSECTION OF DUNN RD AND LILAC AVE, AND APPROX 75 FEET WEST OF LILAC AVE IN THE GRASS AT I-270 AND THE ON RAMP TO I-270 WESTBOUND

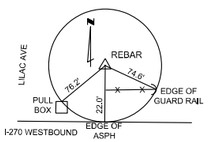

REFERENCE TIE

CONTROL POINT #4
N 1068522.190
E 905123.137
ELEV 491.55
REBAR WITH CAP IN GRASS; APPROX 380 FEET SOUTH OF THE INTERSECTION OF DUNN RD AND LILAC AVE, AND APPROX 130 FEET EAST OF LILAC AVE IN THE GRASS AT I-270 AND THE OFF RAMP FROM I-270 WESTBOUND

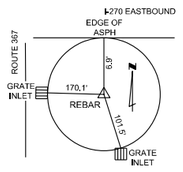

REFERENCE TIE

CONTROL POINT #6
N 1069610.540
E 895023.430
ELEV 565.78
REBAR WITH CAP IN GRASS; APPROX 270 FEET EAST OF THE INTERSECTION OF I-270 OVERPASS AND LEWIS AND CLARK BLVD, ON THE SOUTH SIDE OF I-270

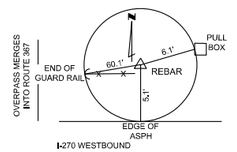

REFERENCE TIE

CONTROL POINT #7
N 1069729.119
E 895379.745
ELEV 556.80
REBAR WITH CAP IN GRASS; APPROX 630 FEET EAST OF THE INTERSECTION OF I-270 OVERPASS AND LEWIS AND CLARK BLVD, ON THE NORTH SIDE OF I-270

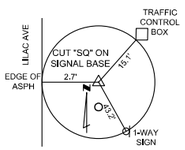

REFERENCE TIE

BM #1 - CUT SQUARE ON WEST SIDE OF CONC TRAFFIC SIGNAL BASE; ON NORTH SIDE OF I-270 ALSO BEING ON THE EAST SIDE OF LILAC AVE
ELEV= 518.16

REFERENCE TIE

BM #2 - CUT SQUARE ON WEST SIDE OF CONC TRAFFIC SIGNAL BASE; SOUTH OF I-270 ALSO BEING ON THE EAST SIDE OF LILAC AVE
ELEV= 508.26

REFERENCE TIE

BM #3 - CUT SQUARE ON SOUTH SIDE OF CONC TRAFFIC SIGNAL BASE; NORTH OF I-270, ALSO BEING ON WEST SIDE OF BELLEFONTAINE RD AND SOUTH OF DUNN RD
ELEV= 483.10

REFERENCE TIE

BM #4 - CUT SQUARE ON WEST SIDE OF CONC TRAFFIC SIGNAL BASE; SOUTH OF I-270, ON EAST SIDE BELLFONTAINE RD ALSO BEING JUST NORTH OF ON RAMP TO I-270 EASTBOUND
ELEV=483.00

REFERENCE TIE

BM #5 - CUT SQUARE ON CONC BASE OF DOUBLE POST SIGN; SOUTH OF I-270, ALSO BEING ON THE WEST SIDE OF ROUTE 367
ELEV= 558.50

REFERENCE TIE

BM #6 - CUT SQUARE ON CONC PAD FOR AREA INLET; JUST NORTH OF I-270, ALSO BEING ON THE WEST SIDE OF ROUTE 367
ELEV= 550.30

REFERENCE POINTS
SHEET 1 OF 1

HDR Engineering, Inc.
1001 Highlands Plaza Drive
Suite 200
St. Louis, MO 63110-1337
314-425-8300
Certificate of Authority: 000856

MISSOURI HIGHWAYS AND TRANSPORTATION COMMISSION

105 WEST CAPITOL
JEFFERSON CITY, MO 65102
1-888-ASK-MODOT (1-888-275-6636)

STATE OF MISSOURI
EUGENE LOUIS KUEKER JR.
NUMBER PE-2010000912
PROFESSIONAL ENGINEER

THIS SHEET HAS BEEN SIGNED, SEALED, AND DATED ELECTRONICALLY.

IF A SEAL IS PRESENT ON THIS SHEET IT HAS BEEN ELECTRONICALLY SEALED AND DATED.

DATE PREPARED	
3/25/2026	
ROUTE	STATE
I-270	MO
DISTRICT	SHEET NO.
SL	14

COUNTY
ST. LOUIS

JOB NO.
J6I3580B

CONTRACT ID.

PROJECT NO.

BRIDGE NO.

DATE	DESCRIPTION

ALL PROJECT COORDINATES HAVE BEEN PROJECTED FROM THE MISSOURI STATE PLANE COORDINATE (SPC) SYSTEM OF 1983 USING AN AVERAGE PROJECT PROJECTION (GRID TO GROUND) FACTOR. TO GET BACK TO STATE PLANE COORDINATES, MULTIPY THE PROJECT COORDINATES BY THE AVERAGE GRID FACTOR AS SHOWN IN THE "REFERENCE CONTROL INFORMATION" PORTION OF THIS TABLE.

PROJECT COORDINATE INFORMATION	
COORDINATE SYSTEM	Stateplane MO East FIPS 2401
HORIZONTAL DATUM	NAD 83
VERTICAL DATUM	NAVD 88
GEOID MODEL	Geoid 12B
ELEVATIONS DETERMINED BY	
PROJECT PROJECTION FACTOR	1.0000855

REFERENCE CONTROL INFORMATION	
COORDINATE SYSTEM	Stateplane MO East FIPS 2401
CONTROL STATION	MOOF
DESIGNATION	MODOT OFALLON CORS ARP
CORS_ID	MOOF
PID	DM4688
LATITUDE	38°45'14.06179
LONGITUDE	90°41'44.78025
NORTHING (M)	324131.1530
EASTING (M)	232983.4880
ZONE	2401
PROJECT AVERAGE GRID FACTOR	0.99991451

EXAMPLE OF PROJECT COORDINATE TO S.P.C.

PROJECT NORTHING X AVERAGE GRID FACTOR
= STATE PLANE NORTHING
PROJECT EASTING X AVERAGE GRID FACTOR
= STATE PLANE EASTING
EXAMPLE: CONTROL POINT #3
N 1083739.801 X 0.99991221 = N 1083644.659
E 713463.461 X 0.99991221 = E 713400.826

LINEAR UNIT CONVERSION

1 METER = 3.280833333 US SURVEY FEET (USFT)

COORDINATE POINT LISTING

SHEET NO	STATION	LOCATION	OFFSET (USFT)	MODIFIED STATE PLANE (GROUND) NORTHING (US SURVEY FT)	EASTING (US SURVEY FT)	ELEVATION (US SURVEY FT)	DESCRIPTION	POINT ID
PROJECT CONTROL POINTS								
7	660+89.25	LT	84.60'	1069465.8070	899933.6200	480.30	MAGNAIL IN ASPH	1
7	660+22.36	RT	181.74'	1069215.9310	899828.3790	482.34	CROSS IN CONC	2
11	711+69.45	LT	78.35'	1068517.6850	904895.3300	493.08	REBAR WITH CAP IN GRASS	3
11	713+96.55	LT	73.13'	1068522.1900	905123.1370	491.55	REBAR WITH CAP IN GRASS	4
-	609+70.76	RT	378.42'	1069294.1350	894703.1860	559.84	CROSS IN CONC	5
4	612+90.51	RT	61.52'	1069610.5400	895023.4300	565.78	REBAR WITH CAP IN GRASS	6
4	616+46.64	LT	57.61'	1069729.1190	895379.7450	556.80	REBAR WITH CAP IN GRASS	7
ALIGNMENTS								
4	610+50.00	EXIST. I-270	0.00'	1069672.4359	894783.0129		BEGINNING OF EXIST. CENTERLINE	
6	642+45.26	EXIST. I-270	0.00'	1069667.2981	898098.3254		P.C.	CURVE_EX_I-270_2
6	647+34.22	EXIST. I-270	0.00'	1069666.5403	898587.2841		P.I.	CURVE_EX_I-270_2
7	652+19.62	EXIST. I-270	0.00'	1069564.5192	899065.4816		P.T.	CURVE_EX_I-270_2
10	701+64.15	EXIST. I-270	0.00'	1068532.8565	903901.1831		P.C.	CURVE_EX_I-270_3
11	707+24.52	EXIST. I-270	0.00'	1068415.9390	904449.2144		P.I.	CURVE_EX_I-270_3
11	712+51.52	EXIST. I-270	0.00'	1068442.1364	904981.8518		INTERSECTION WITH ℄ EXIST. LILAC AVE	
11	712+78.60	EXIST. I-270	0.00'	1068443.3774	905008.9063		P.T.	CURVE_EX_I-270_3
13	741+49.00	EXIST. I-270	0.00'	1068583.9195	907875.8650		END OF PROJECT - EASTBOUND	
13	742+35.00	EXIST. I-270	0.00'	1068588.1303	907961.7619		END OF PROJECT - WESTBOUND	
13	744+00.00	EXIST. I-270	0.00'	1068596.2091	908126.5640		END OF EXIST. CENTERLINE	
5	0+00.00	EXIST. RAMP 8-G	0.00'	1069724.2959	896163.9028		BEGINNING OF EXIST. BASELINE	
4	2+22.05	EXIST. RAMP 8-G	0.00'	1069724.6400	895941.8531		P.C.	CURVE_EX_RAMP8G_1
4	4+55.32	EXIST. RAMP 8-G	0.00'	1069725.0015	895708.5849		P.I.	CURVE_EX_RAMP8G_1
4	6+73.09	EXIST. RAMP 8-G	0.00'	1069862.5827	895520.2087		P.T.	CURVE_EX_RAMP8G_1
4	11+59.94	EXIST. RAMP 8-G	0.00'	1070149.7233	895127.0559		END OF EXIST. BASELINE	
4	11+07.25	EXIST. RAMP 8-F	0.00'	1069193.9511	895211.6031		BEGINNING OF EXIST. BASELINE	
4	13+30.00	EXIST. RAMP 8-F	0.00'	1069363.8226	895355.6868		P.C.	CURVE_EX_RAMP8F_2
4	16+62.04	EXIST. RAMP 8-F	0.00'	1069617.0456	895570.4684		P.I.	CURVE_EX_RAMP8F_2
4	19+51.88	EXIST. RAMP 8-F	0.00'	1069616.9004	895902.5121		P.T.	CURVE_EX_RAMP8F_2
5	26+02.01	EXIST. RAMP 8-F	0.00'	1069624.6161	896552.5155		END OF EXIST. BASELINE	
6	0+00.00	EXIST. RAMP 2 BELLEFONTAINE	0.00'	1069625.2587	898125.1828		BEGINNING OF EXIST. BASELINE, P.C.	CURVE_EX_RAMP2_1
6	1+90.89	EXIST. RAMP 2 BELLEFONTAINE	0.00'	1069624.8683	898316.0742		P.I.	CURVE_EX_RAMP2_1
6	3+81.22	EXIST. RAMP 2 BELLEFONTAINE	0.00'	1069599.1552	898505.2262		P.T.	CURVE_EX_RAMP2_1
6	5+82.60	EXIST. RAMP 2 BELLEFONTAINE	0.00'	1069572.0293	898704.7709		P.C.	CURVE_EX_RAMP2_2
7	8+19.98	EXIST. RAMP 2 BELLEFONTAINE	0.00'	1069540.0546	898939.9850		P.I.	CURVE_EX_RAMP2_2
7	10+55.74	EXIST. RAMP 2 BELLEFONTAINE	0.00'	1069461.5476	899164.0044		P.T.	CURVE_EX_RAMP2_2
7	17+98.89	EXIST. RAMP 2 BELLEFONTAINE	0.00'	1069215.7681	899865.3348		END OF EXIST. BASELINE	
6	0+00.00	EXIST. RAMP 4 BELLEFONTAINE	0.00'	1069215.7681	899865.3348		BEGINNING OF EXIST. BASELINE	
7	7+79.06	EXIST. RAMP 4 BELLEFONTAINE	0.00'	1069157.5849	900642.2191		P.C.	CURVE_EX_RAMP4_1
7	8+90.10	EXIST. RAMP 4 BELLEFONTAINE	0.00'	1069149.2920	900752.9487		P.I.	CURVE_EX_RAMP4_1
7	10+00.80	EXIST. RAMP 4 BELLEFONTAINE	0.00'	1069126.1245	900861.5448		P.T.	CURVE_EX_RAMP4_1
7	14+10.80	EXIST. RAMP 4 BELLEFONTAINE	0.00'	1069040.5816	901262.5216		END OF EXIST. BASELINE	

STATE OF MISSOURI
EUGENE LOUIS KUEKER JR.
NUMBER PE-2010009912
PROFESSIONAL ENGINEER

THIS SHEET HAS BEEN SIGNED, SEALED, AND DATED ELECTRONICALLY.

IF A SEAL IS PRESENT ON THIS SHEET IT HAS BEEN ELECTRONICALLY SEALED AND DATED.

DATE PREPARED: 3/25/2026
ROUTE: I-270 | STATE: MO
DISTRICT: SL | SHEET NO.: 15
COUNTY: ST. LOUIS
JOB NO.: J6I3580B
CONTRACT ID.:
PROJECT NO.:
BRIDGE NO.:

DESCRIPTION	DATE

MISSOURI HIGHWAYS AND TRANSPORTATION COMMISSION
105 WEST CAPITOL
JEFFERSON CITY, MO 65102
1-888-ASK-MODOT (1-888-275-6636)

HDR Engineering, Inc.
1001 Highlands Plaza Drive
Suite 200
St. Louis, MO 63110-1337
314-425-8300
Certificate of Authority: 000856

COORDINATE POINT SHEET
SHEET 1 OF 2

COORDINATE POINT LISTING

SHEET NO	STATION	LOCATION	OFFSET (USFT)	MODIFIED STATE PLANE (GROUND) NORTHING (US SURVEY FT)	EASTING (US SURVEY FT)	ELEVATION (US SURVEY FT)	DESCRIPTION	POINT ID
ALIGNMENTS								
11	0+04.12	EXIST. RAMP 1 LILAC	0.00'	1068673.6040	905009.5084		BEGINNING OF EXIST. BASELINE	
11	6+30.10	EXIST. RAMP 1 LILAC	0.00'	1068575.6061	904391.2468		P.C.	CURVE_EX_RAMP1_1
11	8+69.68	EXIST. RAMP 1 LILAC	0.00'	1068538.0992	904154.6183		P.I.	CURVE_EX_RAMP1_1
10	11+03.73	EXIST. RAMP 1 LILAC	0.00'	1068589.1420	903920.5359		P.T.	CURVE_EX_RAMP1_1
10	15+03.73	EXIST. RAMP 1 LILAC	0.00'	1068674.3850	903529.591		END OF EXIST. BASELINE	
10	0+00.00	EXIST. RAMP 2 LILAC	0.00'	1068541.4916	903629.3064		BEGINNING OF EXIST. BASELINE, P.C.	CURVE_EX_RAMP2_1
10	2+71.61	EXIST. RAMP 2 LILAC	0.00'	1068486.1369	903895.2117		P.I.	CURVE_EX_RAMP2_1
11	5+43.11	EXIST. RAMP 2 LILAC	0.00'	1068418.2465	904158.1957		P.T.	CURVE_EX_RAMP2_1
11	13+65.54	EXIST. RAMP 2 LILAC	0.00'	1068212.6724	904954.5188		END OF EXIST. BASELINE	
12	0+00.00	EXIST. RAMP 3 LILAC	0.00'	1068549.1323	906427.8675		BEGINNING OF EXIST. BASELINE	
12	3+51.04	EXIST. RAMP 3 LILAC	0.00'	1068546.5070	906076.8370		P.C.	CURVE_EX_RAMP3_1
12	4+67.90	EXIST. RAMP 3 LILAC	0.00'	1068545.6336	905959.9777		P.I.	CURVE_EX_RAMP3_1
12	5+84.37	EXIST. RAMP 3 LILAC	0.00'	1068561.3661	905844.1787		P.T.	CURVE_EX_RAMP3_1
11	14+26.56	EXIST. RAMP 3 LILAC	0.00'	1068674.7446	905009.6553		END OF EXIST. BASELINE	
11	0+03.74	EXIST. RAMP 4 LILAC	0.00'	1068214.4498	904954.7305		BEGINNING OF EXIST. BASELINE	
12	7+09.05	EXIST. RAMP 4 LILAC	0.00'	1068401.4314	905634.8041		P.C.	CURVE_EX_RAMP4_1
12	8+11.53	EXIST. RAMP 4 LILAC	0.00'	1068428.5969	905733.6079		P.I.	CURVE_EX_RAMP4_1
12	9+13.22	EXIST. RAMP 4 LILAC	0.00'	1068434.1906	905835.9254		P.T.	CURVE_EX_RAMP4_1
12	15+63.27	EXIST. RAMP 4 LILAC	0.00'	1068473.6750	906484.7600		END OF EXIST. BASELINE	

COORDINATE POINT SHEET
SHEET 2 OF 2

STATE OF MISSOURI
EUGENE LOUIS KUEKER JR.
NUMBER PE-2010009912
PROFESSIONAL ENGINEER

THIS SHEET HAS BEEN SIGNED, SEALED, AND DATED ELECTRONICALLY.

DATE PREPARED 3/25/2026
ROUTE I-270 | STATE MO
DISTRICT SL | SHEET NO. 16
COUNTY ST. LOUIS
JOB NO. J6I3580B
CONTRACT ID.
PROJECT NO.
BRIDGE NO.

DESCRIPTION	DATE

IF A SEAL IS PRESENT ON THIS SHEET IT HAS BEEN ELECTRONICALLY SEALED AND DATED.

MISSOURI HIGHWAYS AND TRANSPORTATION COMMISSION
105 WEST CAPITOL
JEFFERSON CITY, MO 65102
1-888-ASK-MODOT (1-888-275-6636)

HDR Engineering, Inc.
1001 Highlands Plaza Drive
Suite 200
St. Louis, MO 63110-1337
314-425-8300
Certificate of Authority: 000856

NOTES:

1. EXISTING GUIDE, WARNING, AND REGULATORY SIGNS WITHIN THE WORK ZONE SHALL NOT CONFLICT WITH THE CONSTRUCTION SIGNING (SUCH AS SPEED LIMIT, BRIDGE CLEARANCE, ETC.) AND SHALL BE COVERED, REMOVED, OR RELOCATED WITH NO DIRECT PAYMENT. CONSTRUCTION SIGNS SHALL NOT OBSTRUCT EXISTING SIGNS REMAINING IN PLACE.

2. ALL SPACING AND DISTANCES ARE APPROXIMATE. THEY MAY BE ADJUSTED BY THE ENGINEER TO FIT FIELD CONDITIONS.

3. SEE STANDARD PLAN 616.10BF FOR TEMPORARY TRAFFIC CONTROL DEVICES DETAILS.

4. SEE STANDARD PLAN 620.10G FOR TEMPORARY PAVEMENT MARKING DETAILS.

5. CONSTRUCTION SIGNS NOTED AS POST-MOUNTED (POST) SHALL BE MOUNTED PER STANDARD PLAN 616.10BF.

6. THE SPEED LIMIT DURING ACTIVE CONSTRUCTION SHALL BE 50 M.P.H. UNLESS OTHERWISE NOTED IN THE TRAFFIC CONTROL PLAN.

7. CONFLICTING STRIPING SHALL BE REMOVED PRIOR TO GUIDING TRAFFIC THROUGH WORK ZONES. ANY STRIPING WHICH IS DAMAGED DURING A DAYS WORK SHALL BE RE-STRIPED NO LATER THAN THE END OF THE SAME DAY.

8. ALL WARNING SIGNS SHALL HAVE A FLUORESCENT SHEETING.

9. WORDING FOR CHANGEABLE MESSAGE SIGNS SHALL BE AS APPROVED OR DIRECTED BY THE ENGINEER.

10. EXACT LOCATIONS FOR CHANGEABLE MESSAGE SIGNS SHALL BE AS DIRECTED BY THE ENGINEER.

11. MISSOURI ONE CALL (800 DIG RITE) SHALL BE CONTACTED FOR LOCATES (800-344-7483 OR 811) BEFORE BEGINNING ANY EXCAVATION OR BORING ACTIVITIES.

12. UNDERGROUND FACILITIES, STRUCTURES AND UTILITIES SHOWN ON PLANS HAVE BEEN DRAFTED FROM FIELD NOTES AND AERIAL PHOTOGRAPHY; THE COMMISSION DOES NOT WARRANT THE LOCATIONS OF THESE FACILITIES AS PRECISE. IT IS POSSIBLE THERE MAY BE OTHERS, THE EXISTENCE OF WHICH IS PRESENTLY NOT KNOWN OR SHOWN. IT IS THE CONTRACTOR'S RESPONSIBILITY TO DETERMINE THE EXISTENCE AND PRECISE LOCATION OF ALL FACILITIES AND TO AVOID DAMAGE TO THEM. SEE THE JOB SPECIAL PROVISIONS FOR A LIST OF UTILITY COMPANIES ON OR WITHIN THE VICINITY OF THE PROJECT LIMITS.

TRAFFIC CONTROL LEGEND

- SIGN (SINGLE SIDED)
- SIGN (DOUBLE SIDED)
- FLASHING ARROW PANEL
- DIRECTIONAL INDICATOR BARRICADE
- CHANNELIZER
- BARRICADE
- CHANGEABLE MESSAGE BOARD
- WORK AREA
- TRAFFIC USAGE

TEMPORARY TRAFFIC CONTROL TYPICAL APPLICATIONS NOTES:

1. REMOVE AND/OR MODIFY ANY EXISTING PAVEMENT MARKINGS AS NEEDED.

2. ALTERNATIVE TEMPORARY TRAFFIC CONTROL SET-UPS SHOULD BE CONSIDERED WHEN REDUCTION IN CAPACITY CANNOT BE TOLERATED. SET-UPS MUST BE SUBMITTED TO ENGINEER FOR APPROVAL PRIOR TO IMPLEMENTATION.

3. UPON APPROVAL OF THE ENGINEER, THE CONTRACTOR MAY PROVIDE ADDITIONAL PROTECTIVE VEHICLES EQUIPPED WITH TRUCK MOUNTED ATTENUATORS, NO DIRECT PAY.

4. TRUCK MOUNTED ATTENUATOR WITH FLASHING ARROW PANEL ARE REQUIRED ON ALL MOBILE OPERATIONS WHEN WORKERS ARE PRESENT, NO DIRECT PAY.

5. PROTECTIVE TRUCK AND WORK VEHICLES SHALL DISPLAY HIGH-INTENSITY ROTATING, FLASHING, OSCILLATING, OR STROBE LIGHTS.

6. VEHICLE HAZARD WARNING SIGNALS SHALL NOT BE USED INSTEAD OF THE VEHICLE'S HIGH-INTENSITY ROTATING, FLASHING, OSCILLATING OR STROBE LIGHTS.

7. FLASHING ARROW PANELS SHALL, AS A MINIMUM, BE TYPE B, WITH A SIZE OF 60 X 30 INCHES.

TRAFFIC CONTROL
GENERAL NOTES AND LEGEND
SHEET 1 OF 1

STATE OF MISSOURI
EUGENE LOUIS KUEKER JR.
NUMBER PE-2010009912
PROFESSIONAL ENGINEER

THIS SHEET HAS BEEN SIGNED, SEALED, AND DATED ELECTRONICALLY.

IF A SEAL IS PRESENT ON THIS SHEET IT HAS BEEN ELECTRONICALLY SEALED AND DATED.

DATE PREPARED: 3/25/2026

ROUTE	STATE
I-270	MO

DISTRICT	SHEET NO.
SL	17

COUNTY: ST. LOUIS

JOB NO.: J6I3580B

CONTRACT ID.:

PROJECT NO.:

BRIDGE NO.:

DESCRIPTION	DATE

MISSOURI HIGHWAYS AND TRANSPORTATION COMMISSION

105 WEST CAPITOL
JEFFERSON CITY, MO 65102
1-888-ASK-MODOT (1-888-275-6636)

HDR Engineering, Inc.
1001 Highlands Plaza Drive
Suite 200
St. Louis, MO 63110-1337
314-425-8300
Certificate of Authority: 000856

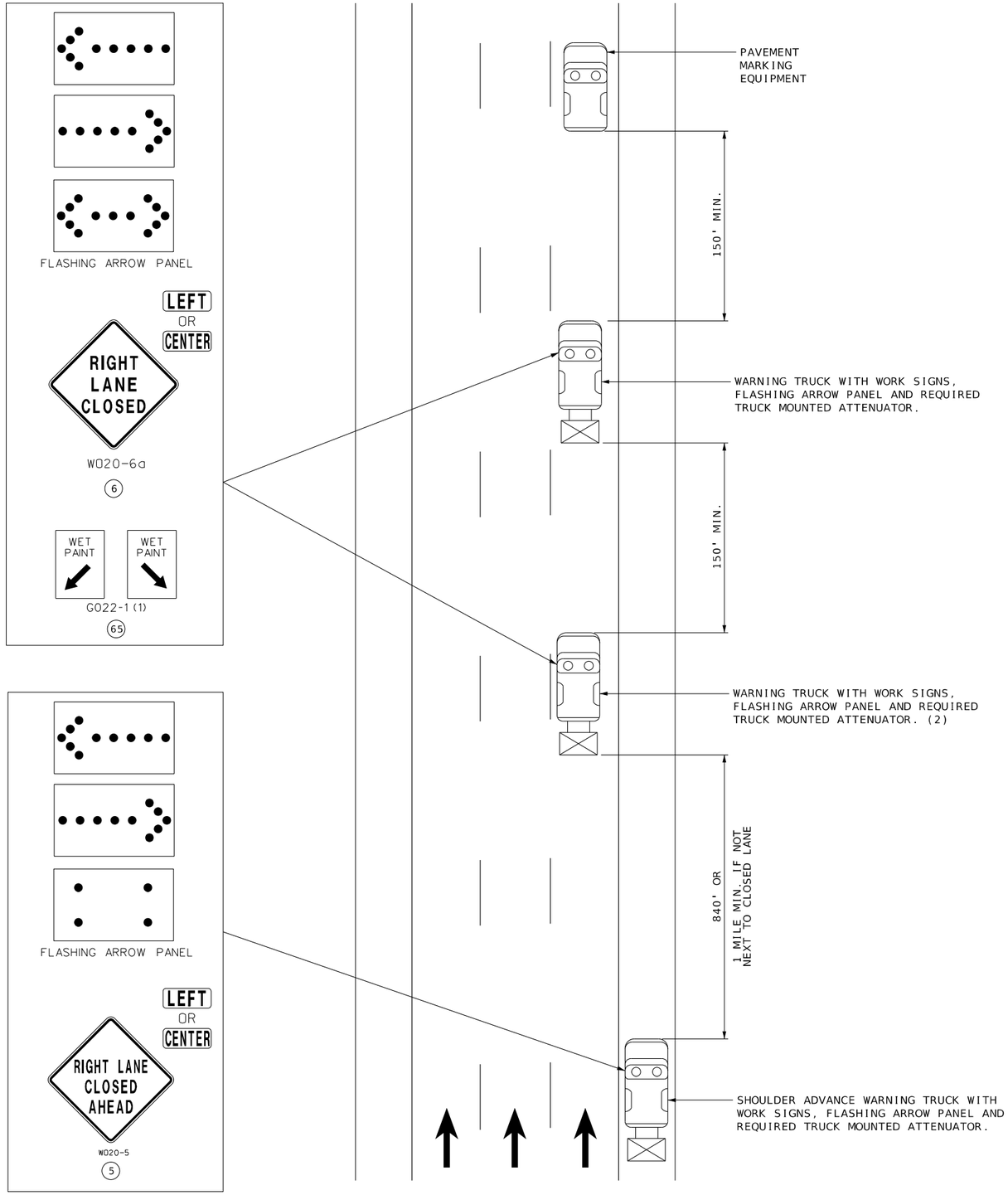

STRIPING ON MULTI-LANE HIGHWAY

NOT TO SCALE

NOTES:

UPON APPROVAL OF THE ENGINEER, THE CONTRACTOR MAY PROVIDE ADDITIONAL PROTECTIVE TRUCKS EQUIPPED WITH PROPER WARNING DEVICES.

PROTECTIVE TRUCKS AND WORK VEHICLES SHALL DISPLAY HIGH-INTENSITY ROTATING, FLASHING, OSCILLATING, OR STROBE LIGHTS.

VEHICLE HAZARD WARNING SIGNALS SHALL NOT BE USED INSTEAD OF THE VEHICLE'S HIGH-INTENSITY ROTATING, FLASHING, OSCILLATING, OR STROBE LIGHTS.

VEHICLE-MOUNTED SIGNS SHALL BE MOUNTED IN A MANNER SUCH THAT THEY ARE NOT OBSCURED BY EQUIPMENT OR SUPPLIES. SIGN LEGENDS ON VEHICLE-MOUNTED SIGNS SHALL BE COVERED OR TURNED FROM VIEW WHEN WORK IS NOT IN PROGRESS.

FLASHING ARROW PANELS SHALL BE INCIDENTAL TO TRUCK MOUNTED ATTENUATORS, WHEREVER USED. NO ADDITIONAL PAYMENT WILL BE MADE.

FLASHING ARROW PANELS SHALL, AS A MINIMUM, BE TYPE B, WITH A SIZE OF 60 X 30 INCHES.

A FLASHING ARROW BOARD SHALL BE USED WHEN A FREEWAY LANE IS CLOSED. WHEN MORE THAN ONE LANE CLOSED, A SEPARATE FLASHING ARROW BOARD SHALL BE USED FOR EACH CLOSED LANE.

(1) WET PAINT SIGNS ARE INSTALLED TO INDICATE THE SIDE IN WHICH THE PAVEMENT MARKING MATERIAL IS BEING APPLIED. AT THE CONTRACTOR'S OPTION, A FRONT FACING WET PAINT SIGN MAY BE INSTALLED ON THE LEFT SIDE OF THE PAVEMENT MARKING EQUIPMENT.

(2) WARNING TRUCK IS POSITIONED AT THE NO TRACK POINT OF THE PAVEMENT MARKING MATERIAL, OR SPACING SHOWN, WHICH EVER IS GREATER.

TRAFFIC CONTROL LEGEND

- SIGN (SINGLE SIDED)
- SIGN (DOUBLE SIDED)
- FLASHING ARROW PANEL
- DIRECTIONAL INDICATOR BARRICADE
- CHANNELIZER
- BARRICADE
- CHANGEABLE MESSAGE BOARD
- WORK AREA

TYPICAL APPLICATION
SHEET 1 OF 8

STATE OF MISSOURI
EUGENE LOUIS KUEKER JR.
NUMBER PE-2011000912
PROFESSIONAL ENGINEER
THIS SHEET HAS BEEN SIGNED, SEALED, AND DATED ELECTRONICALLY.

IF A SEAL IS PRESENT ON THIS SHEET IT HAS BEEN ELECTRONICALLY SEALED AND DATED.

DATE PREPARED 3/25/2026
ROUTE I-270 | STATE MO
DISTRICT SL | SHEET NO. 18
COUNTY ST. LOUIS
JOB NO. J6I3580B
CONTRACT ID.
PROJECT NO.
BRIDGE NO.

DESCRIPTION	DATE

MISSOURI HIGHWAYS AND TRANSPORTATION COMMISSION
105 WEST CAPITOL
JEFFERSON CITY, MO 65102
1-888-ASK-MODOT (1-888-275-6636)

HDR Engineering, Inc.
1001 Highlands Plaza Drive
Suite 200
St. Louis, MO 63110-1337
314-425-8300
Certificate of Authority: 000856

c:\pwworking\central01\d5178262\018_TC02_J6I3580B_I1.dgn 1:52:08 PM 3/25/2026

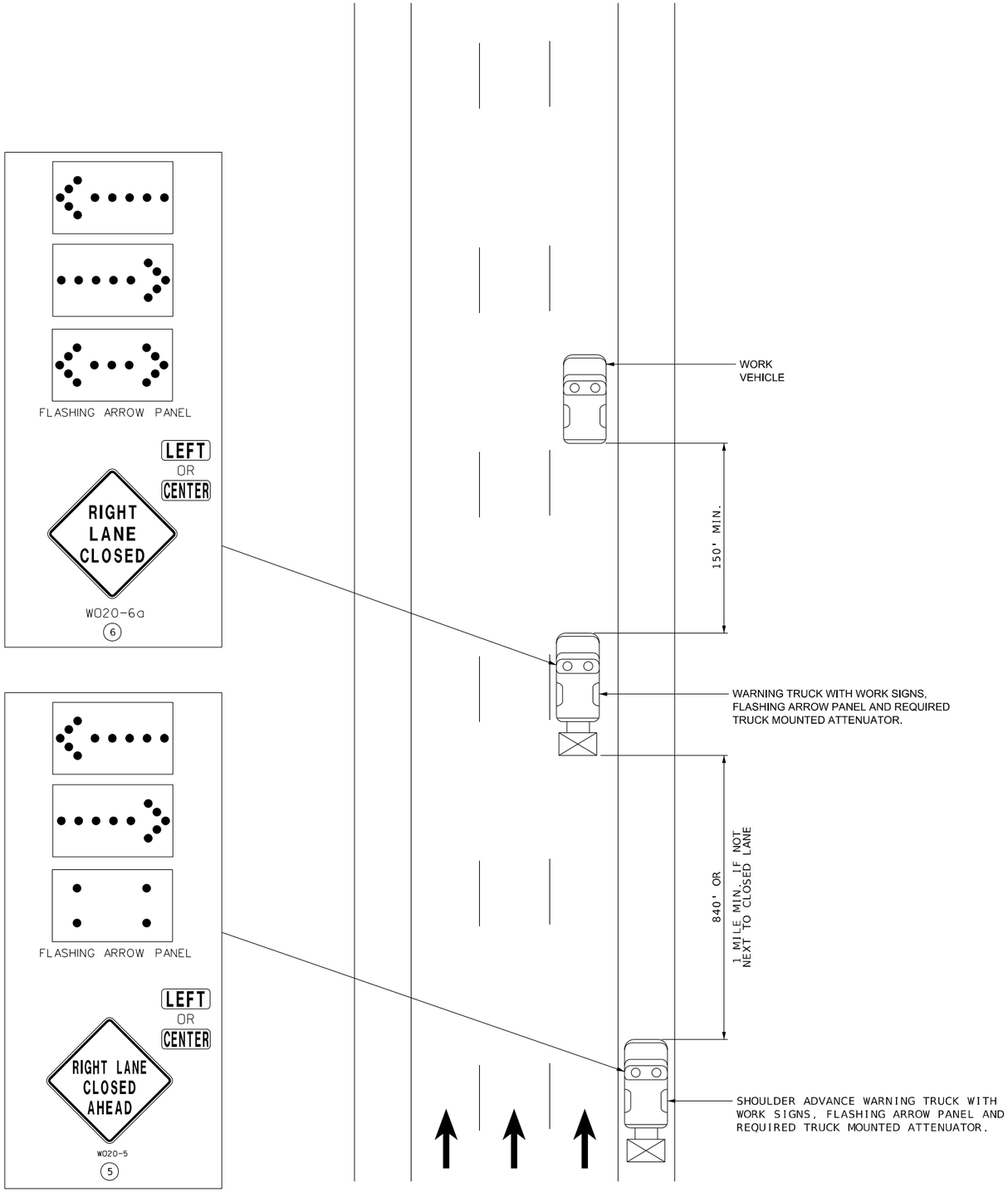

MOBILE ON MULTI-LANE HIGHWAY

NOT TO SCALE

NOTES:

UPON APPROVAL OF THE ENGINEER, THE CONTRACTOR MAY PROVIDE ADDITIONAL PROTECTIVE TRUCKS EQUIPPED WITH PROPER WARNING DEVICES.

PROTECTIVE TRUCKS AND WORK VEHICLES SHALL DISPLAY HIGH-INTENSITY ROTATING, FLASHING, OSCILLATING, OR STROBE LIGHTS.

VEHICLE HAZARD WARNING SIGNALS SHALL NOT BE USED INSTEAD OF THE VEHICLE'S HIGH-INTENSITY ROTATING, FLASHING, OSCILLATING, OR STROBE LIGHTS.

VEHICLE-MOUNTED SIGNS SHALL BE MOUNTED IN A MANNER SUCH THAT THEY ARE NOT OBSCURED BY EQUIPMENT OR SUPPLIES. SIGN LEGENDS ON VEHICLE-MOUNTED SIGNS SHALL BE COVERED OR TURNED FROM VIEW WHEN WORK IS NOT IN PROGRESS.

FLASHING ARROW PANELS SHALL BE INCIDENTAL TO TRUCK MOUNTED ATTENUATORS, WHEREVER USED. NO ADDITIONAL PAYMENT WILL BE MADE.

FLASHING ARROW PANELS SHALL, AS A MINIMUM, BE TYPE B, WITH A SIZE OF 60 X 30 INCHES.

A FLASHING ARROW BOARD SHALL BE USED WHEN A FREEWAY LANE IS CLOSED. WHEN MORE THAN ONE LANE CLOSED, A SEPARATE FLASHING ARROW BOARD SHALL BE USED FOR EACH CLOSED LANE.

TRAFFIC CONTROL LEGEND

- SIGN (SINGLE SIDED)
- SIGN (DOUBLE SIDED)
- FLASHING ARROW PANEL
- DIRECTIONAL INDICATOR BARRICADE
- CHANNELIZER
- BARRICADE
- CHANGEABLE MESSAGE BOARD
- WORK AREA

TYPICAL APPLICATION
SHEET 2 OF 8

STATE OF MISSOURI
EUGENE LOUIS KUEKER JR.
NUMBER PE-2011000912
PROFESSIONAL ENGINEER
THIS SHEET HAS BEEN SIGNED, SEALED, AND DATED ELECTRONICALLY.

IF A SEAL IS PRESENT ON THIS SHEET IT HAS BEEN ELECTRONICALLY SEALED AND DATED.

DATE PREPARED 3/25/2026
ROUTE I-270 | STATE MO
DISTRICT SL | SHEET NO. 19
COUNTY ST. LOUIS
JOB NO. J6I3580B
CONTRACT ID.
PROJECT NO.
BRIDGE NO.

DESCRIPTION	DATE

MISSOURI HIGHWAYS AND TRANSPORTATION COMMISSION
105 WEST CAPITOL
JEFFERSON CITY, MO 65102
1-888-ASK-MODOT (1-888-275-6636)

HDR Engineering, Inc.
1001 Highlands Plaza Drive
Suite 200
St. Louis, MO 63110-1337
314-425-8300
Certificate of Authority: 000856

NOT TO SCALE

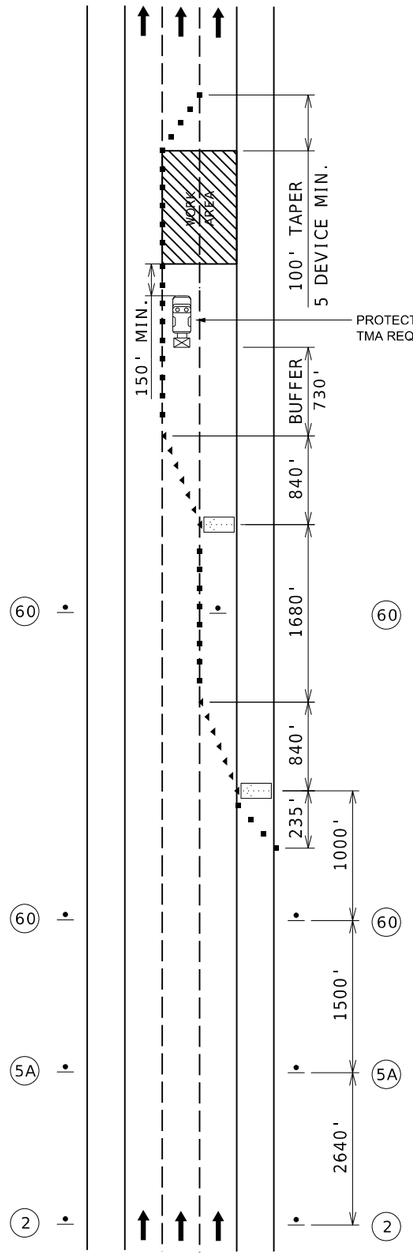

DOUBLE LANE CLOSURE
ON A FREEWAY



WO20-1

(2)



WO20-5a

(5A)

LEFT

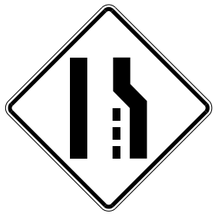

WO4-2R

(60)

TRAFFIC CONTROL LEGEND

- SIGN (SINGLE SIDED)
- SIGN (DOUBLE SIDED)
- FLASHING ARROW PANEL
- DIRECTIONAL INDICATOR BARRICADE
- CHANNELIZER
- BARRICADE
- CHANGEABLE MESSAGE BOARD
- WORK AREA

TYPICAL APPLICATION
SHEET 3 OF 8

STATE OF MISSOURI
EUGENE LOUIS KUEKER JR.
NUMBER PE-2010009912
PROFESSIONAL ENGINEER

THIS SHEET HAS BEEN SIGNED, SEALED, AND DATED ELECTRONICALLY.

IF A SEAL IS PRESENT ON THIS SHEET IT HAS BEEN ELECTRONICALLY SEALED AND DATED.

DATE PREPARED 3/25/2026

ROUTE	STATE
I-270	MO
DISTRICT	SHEET NO.
SL	20

COUNTY: ST. LOUIS
JOB NO.: J6I3580B
CONTRACT ID.:
PROJECT NO.:
BRIDGE NO.:

DESCRIPTION	DATE

MISSOURI HIGHWAYS AND TRANSPORTATION COMMISSION
105 WEST CAPITOL
JEFFERSON CITY, MO 65102
1-888-ASK-MODOT (1-888-275-6636)

HDR Engineering, Inc.
1001 Highlands Plaza Drive
Suite 200
St. Louis, MO 63110-1337
314-425-8300
Certificate of Authority: 000856

NOT TO SCALE

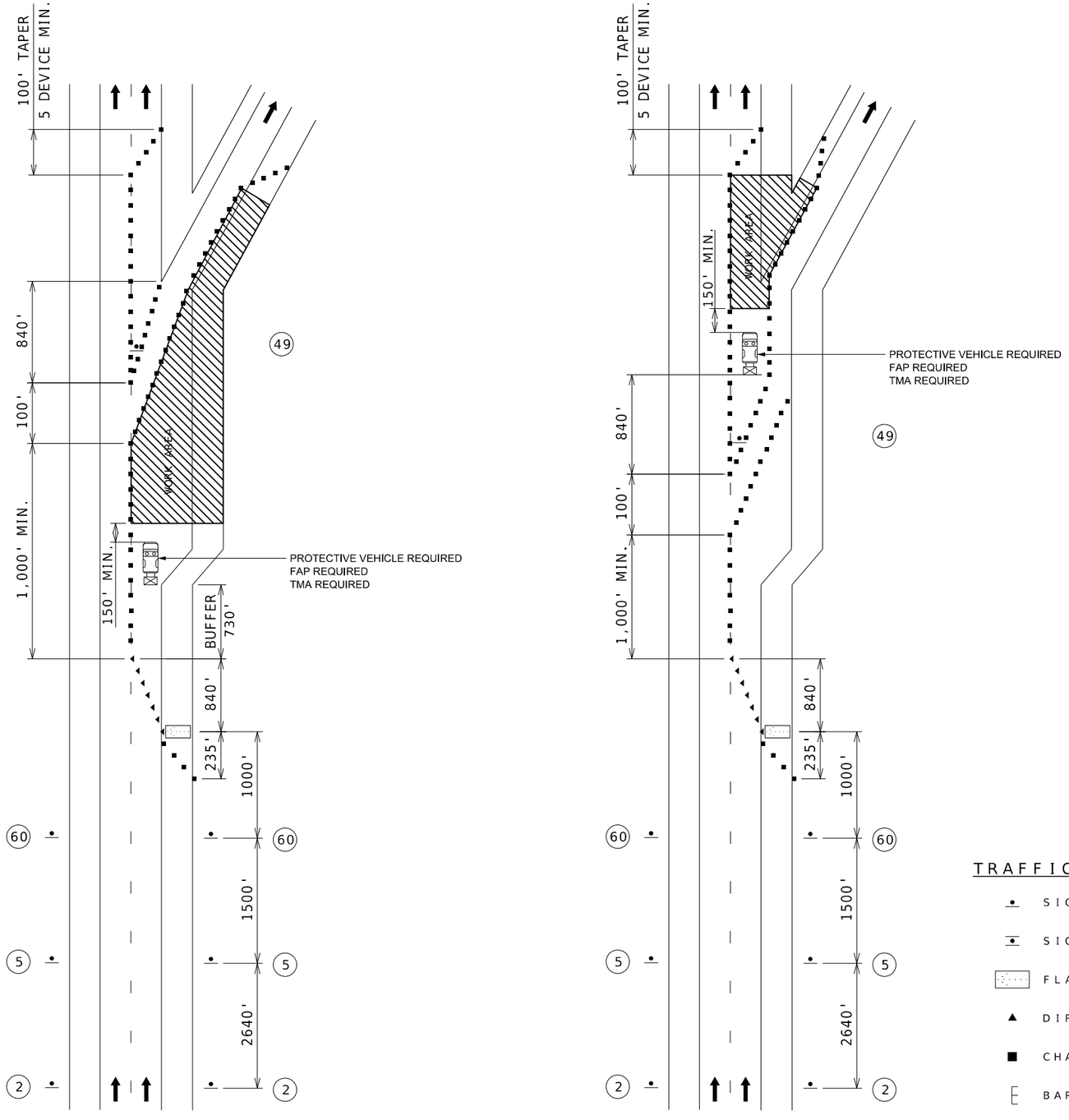

WORK IN THE VICINITY
OF AN EXIT RAMP



WO20-1
(2)



WO20-5
(5)

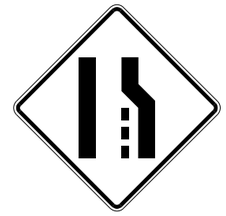

WO4-2R
(60)



E05-1
(49)

TRAFFIC CONTROL LEGEND

- SIGN (SINGLE SIDED)
- SIGN (DOUBLE SIDED)
- FLASHING ARROW PANEL
- DIRECTIONAL INDICATOR BARRICADE
- CHANNELIZER
- BARRICADE
- CHANGEABLE MESSAGE BOARD
- WORK AREA

TYPICAL APPLICATION
SHEET 4 OF 8

STATE OF MISSOURI
EUGENE LOUIS KUEKER JR.
NUMBER PE-2010009912
PROFESSIONAL ENGINEER
THIS SHEET HAS BEEN SIGNED, SEALED, AND DATED ELECTRONICALLY.

DATE PREPARED 3/25/2026
ROUTE I-270 | STATE MO
DISTRICT SL | SHEET NO. 21
COUNTY ST. LOUIS
JOB NO. J6I3580B
CONTRACT ID.
PROJECT NO.
BRIDGE NO.

DESCRIPTION | DATE

IF A SEAL IS PRESENT ON THIS SHEET IT HAS BEEN ELECTRONICALLY SEALED AND DATED.

MISSOURI HIGHWAYS AND TRANSPORTATION COMMISSION
105 WEST CAPITOL
JEFFERSON CITY, MO 65102
1-888-ASK-MODOT (1-888-275-6636)

HDR Engineering, Inc.
1001 Highlands Plaza Drive
Suite 200
St. Louis, MO 63110-1337
314-425-8300
Certificate of Authority: 000856

NOT TO SCALE

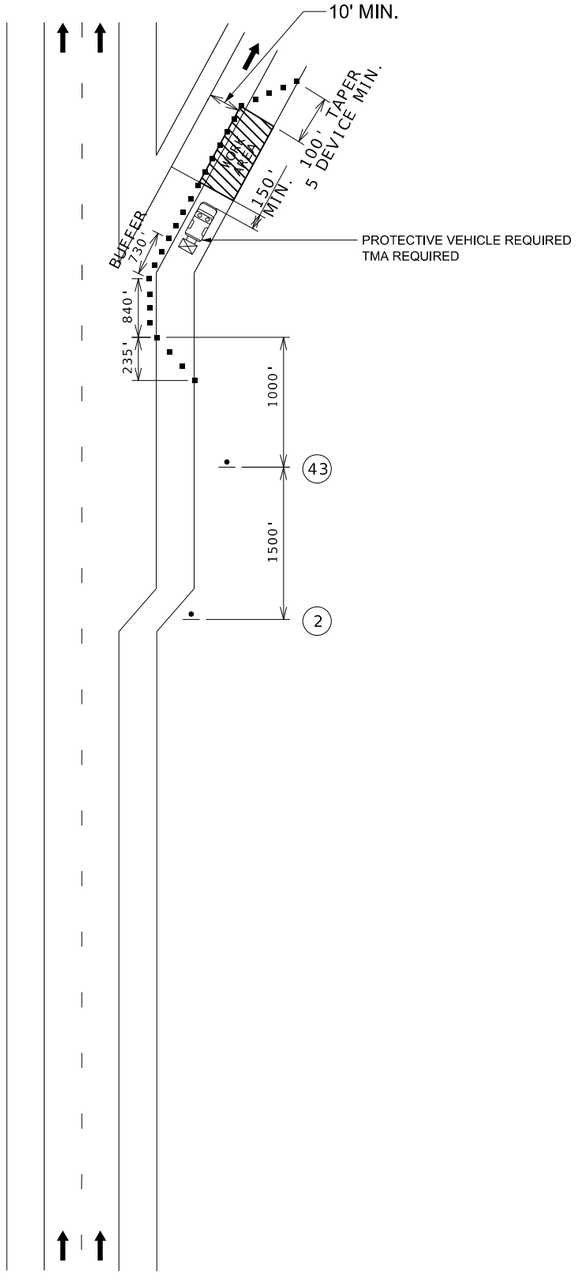

PARTIAL RAMP CLOSURE



WO20-1

(2)



WO5-1

(43)

TRAFFIC CONTROL LEGEND

- SIGN (SINGLE SIDED)
- SIGN (DOUBLE SIDED)
- FLASHING ARROW PANEL
- DIRECTIONAL INDICATOR BARRICADE
- CHANNELIZER
- BARRICADE
- CHANGEABLE MESSAGE BOARD
- WORK AREA

TYPICAL APPLICATION
SHEET 5 OF 8

STATE OF MISSOURI
EUGENE LOUIS KUEKER JR.
NUMBER PE-2011000912
PROFESSIONAL ENGINEER

THIS SHEET HAS BEEN SIGNED, SEALED, AND DATED ELECTRONICALLY.

IF A SEAL IS PRESENT ON THIS SHEET IT HAS BEEN ELECTRONICALLY SEALED AND DATED.

DATE PREPARED: 3/25/2026

ROUTE	STATE
I-270	MO

DISTRICT	SHEET NO.
SL	22

COUNTY: ST. LOUIS

JOB NO.: J6I3580B

CONTRACT ID.:

PROJECT NO.:

BRIDGE NO.:

DESCRIPTION	DATE

MISSOURI HIGHWAYS AND TRANSPORTATION COMMISSION
105 WEST CAPITOL
JEFFERSON CITY, MO 65102
1-888-ASK-MODOT (1-888-275-6636)

HDR Engineering, Inc.
1001 Highlands Plaza Drive
Suite 200
St. Louis, MO 63110-1337
314-425-8300
Certificate of Authority: 000856

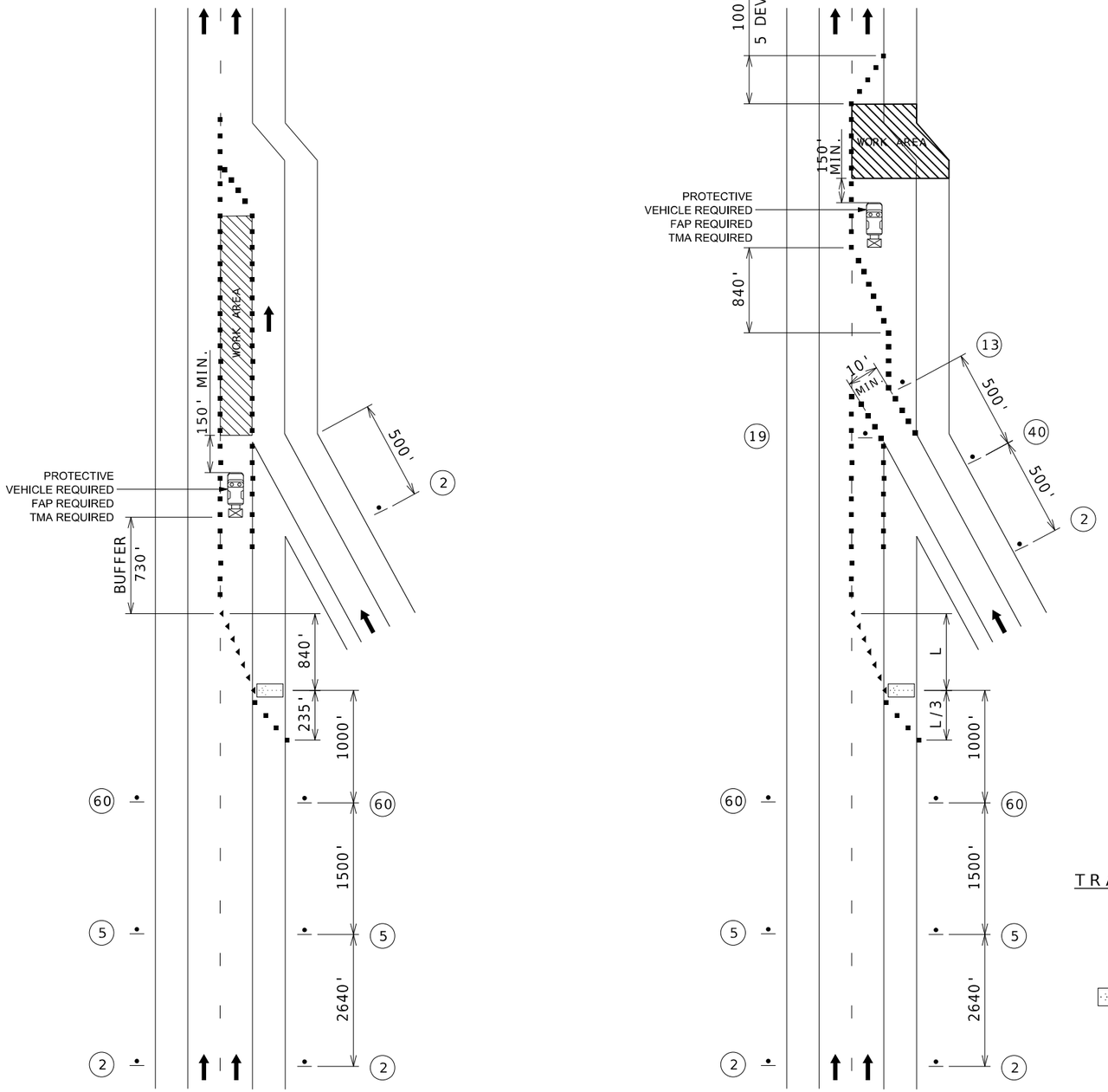

WORK IN THE VICINITY
OF AN ENTRANCE RAMP

NOT TO SCALE



WO20-1
2



WO20-5
5

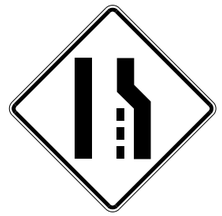

WO4-2R
60



WO4-1R
19

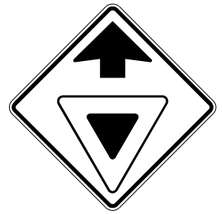

WO3-2
40



R1-2
13

TRAFFIC CONTROL LEGEND

- SIGN (SINGLE SIDED)
- SIGN (DOUBLE SIDED)
- FLASHING ARROW PANEL
- DIRECTIONAL INDICATOR BARRICADE
- CHANNELIZER
- BARRICADE
- CHANGEABLE MESSAGE BOARD
- WORK AREA

TYPICAL APPLICATION
SHEET 6 OF 8

STATE OF MISSOURI
EUGENE LOUIS KUEKER JR.
NUMBER PE-2011000912
PROFESSIONAL ENGINEER
THIS SHEET HAS BEEN SIGNED, SEALED, AND DATED ELECTRONICALLY.

IF A SEAL IS PRESENT ON THIS SHEET IT HAS BEEN ELECTRONICALLY SEALED AND DATED.

DATE PREPARED 3/25/2026
ROUTE I-270 | STATE MO
DISTRICT SL | SHEET NO. 23
COUNTY ST. LOUIS
JOB NO. J6I3580B
CONTRACT ID.
PROJECT NO.
BRIDGE NO.

DESCRIPTION	DATE

MISSOURI HIGHWAYS AND TRANSPORTATION COMMISSION
105 WEST CAPITOL
JEFFERSON CITY, MO 65102
1-888-ASK-MODOT (1-888-275-6636)

HDR Engineering, Inc.
1001 Highlands Plaza Drive
Suite 200
St. Louis, MO 63110-1337
314-425-8300
Certificate of Authority: 000856

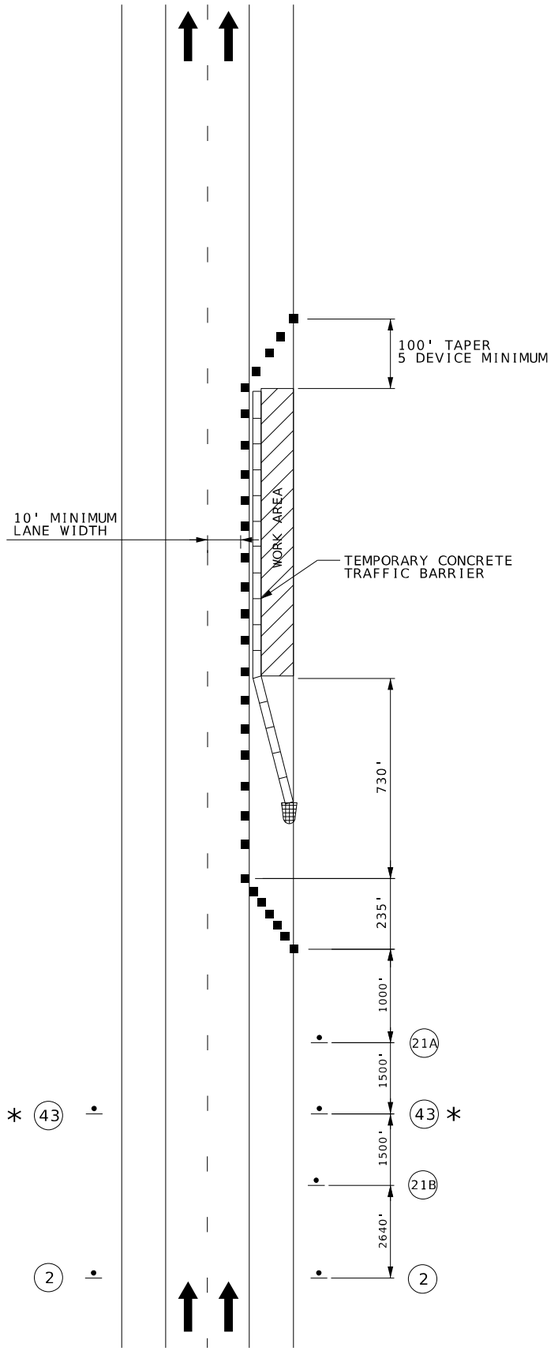

SHOULDER WORK

DIVIDED HIGHWAY

TRAFFIC CONTROL LEGEND

NOT TO SCALE

- SIGN (SINGLE SIDED)
- SIGN (DOUBLE SIDED)
- FLASHING ARROW PANEL
- DIRECTIONAL INDICATOR BARRICADE
- CHANNELIZER
- BARRICADE
- CHANGEABLE MESSAGE BOARD
- WORK AREA



WO20-1

(2)

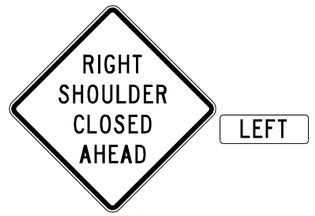

WO21-5bR/
WO21-5bL

(21B)

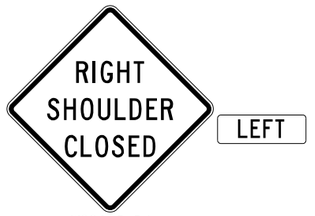

WO21-5aR/
WO21-5bL

(21A)



WO5-1



(PLAQUE NOT USED IF LESS THAN ONE MILE.)

WO7-3a

(43) * OMIT SIGN 43 FOR NO TRAVELWAY ENCROACHMENT.

TYPICAL APPLICATION
SHEET 7 OF 8

STATE OF MISSOURI
EUGENE LOUIS KUEKER JR.
NUMBER PE-2011000912
PROFESSIONAL ENGINEER

THIS SHEET HAS BEEN SIGNED, SEALED, AND DATED ELECTRONICALLY.

DATE PREPARED 3/25/2026

ROUTE	STATE
I-270	MO
DISTRICT	SHEET NO.
SL	24

COUNTY: ST. LOUIS

JOB NO. J6I3580B

CONTRACT ID.

PROJECT NO.

BRIDGE NO.

DESCRIPTION	DATE

IF A SEAL IS PRESENT ON THIS SHEET IT HAS BEEN ELECTRONICALLY SEALED AND DATED.

MISSOURI HIGHWAYS AND TRANSPORTATION COMMISSION

105 WEST CAPITOL
JEFFERSON CITY, MO 65102
1-888-ASK-MODOT (1-888-275-6636)

HDR Engineering, Inc.
1001 Highlands Plaza Drive
Suite 200
St. Louis, MO 63110-1337
314-425-8300
Certificate of Authority: 000856

NOT TO SCALE

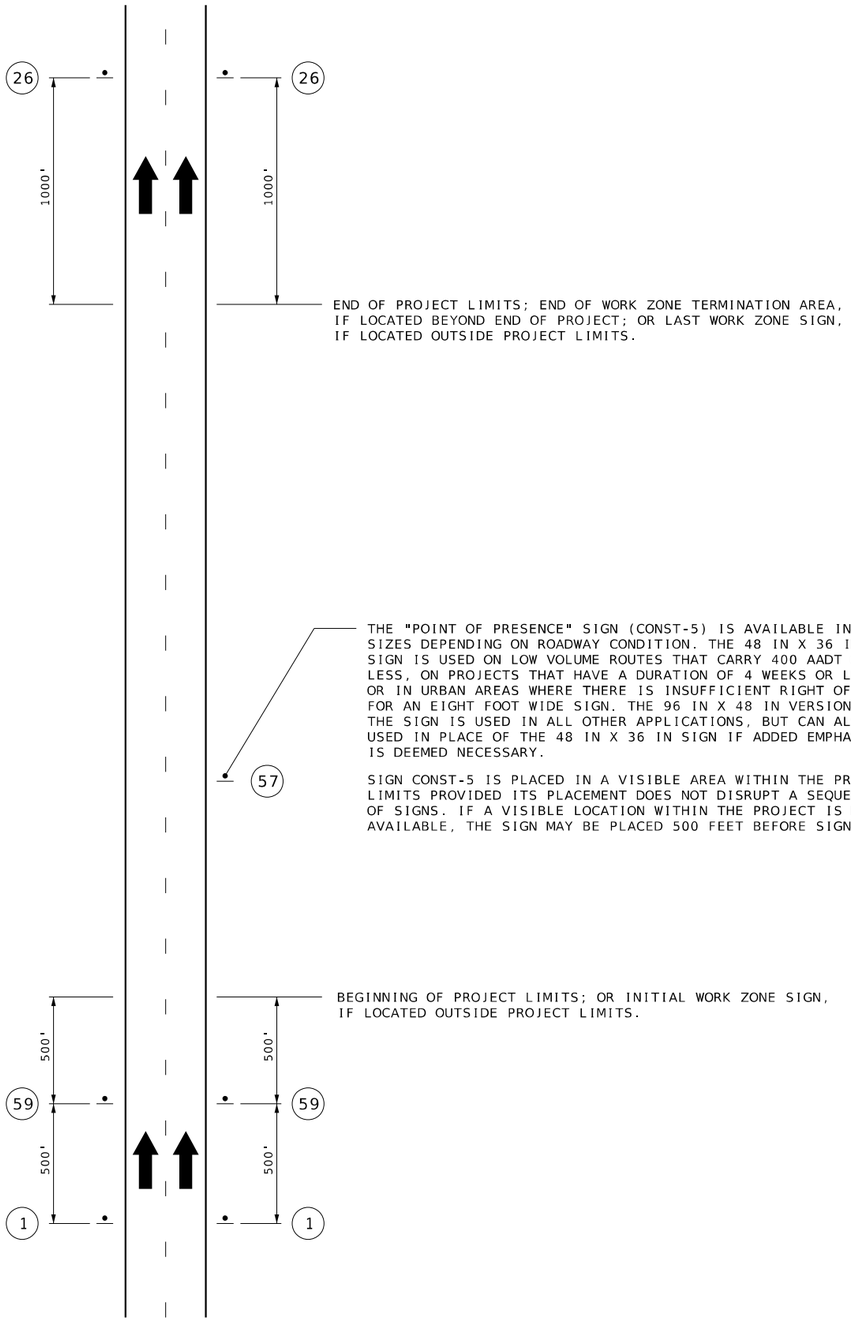

ROAD WORK
NEXT MILES

GO20-1

(1)

END
ROAD WORK

GO20-2

(26)

WORK ZONE
NO PHONE
ZONE

CONST-8

(59)

Road
Improvements
MoDOT

CONST-5

(57)

BEGIN/END OF PROJECT SIGNING

DIVIDED HIGHWAY

TRAFFIC CONTROL LEGEND

- SIGN (SINGLE SIDED)
- SIGN (DOUBLE SIDED)
- FLASHING ARROW PANEL
- DIRECTIONAL INDICATOR BARRICADE
- CHANNELIZER
- BARRICADE
- CHANGEABLE MESSAGE BOARD
- WORK AREA

TYPICAL APPLICATION
SHEET 8 OF 8

STATE OF MISSOURI
EUGENE LOUIS KUEKER JR.
NUMBER PE-2010009912
PROFESSIONAL ENGINEER

THIS SHEET HAS BEEN SIGNED, SEALED, AND DATED ELECTRONICALLY.

IF A SEAL IS PRESENT ON THIS SHEET IT HAS BEEN ELECTRONICALLY SEALED AND DATED.

DATE PREPARED 3/25/2026

ROUTE	STATE
I-270	MO
DISTRICT	SHEET NO.
SL	25

COUNTY: ST. LOUIS
JOB NO.: J6I3580B
CONTRACT ID.:
PROJECT NO.:
BRIDGE NO.:

DESCRIPTION	DATE

MISSOURI HIGHWAYS AND TRANSPORTATION COMMISSION
105 WEST CAPITOL
JEFFERSON CITY, MO 65102
1-888-ASK-MODOT (1-888-275-6636)

HDR Engineering, Inc.
1001 Highlands Plaza Drive
Suite 200
St. Louis, MO 63110-1337
314-425-8300
Certificate of Authority: 000856

NOTES:
INLAID PAVEMENT MARKERS TO BE INSTALLED ON I-270 USING THIS STANDARD.

I.W. = 6" INTERMITTENT WHITE HIGH BUILD WATERBORNE PAVEMENT MARKING PAINT (TYPE L BEADS)
NOTE: USE CONTRAST MARKINGS ON RECONSTRUCTION AREA IF CONCRETE OPTION CHOSEN (NO DIRECT PAY)
S.W. = 6" SOLID WHITE HIGH BUILD WATERBORNE PAVEMENT MARKING PAINT (TYPE L BEADS)
S.Y. = 6" SOLID YELLOW HIGH BUILD WATERBORNE PAVEMENT MARKING PAINT (TYPE L BEADS)
GORE = 12" SOLID WHITE HIGH BUILD WATERBORNE PAVEMENT MARKING PAINT (TYPE L BEADS)

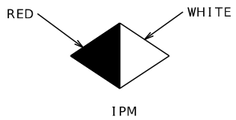

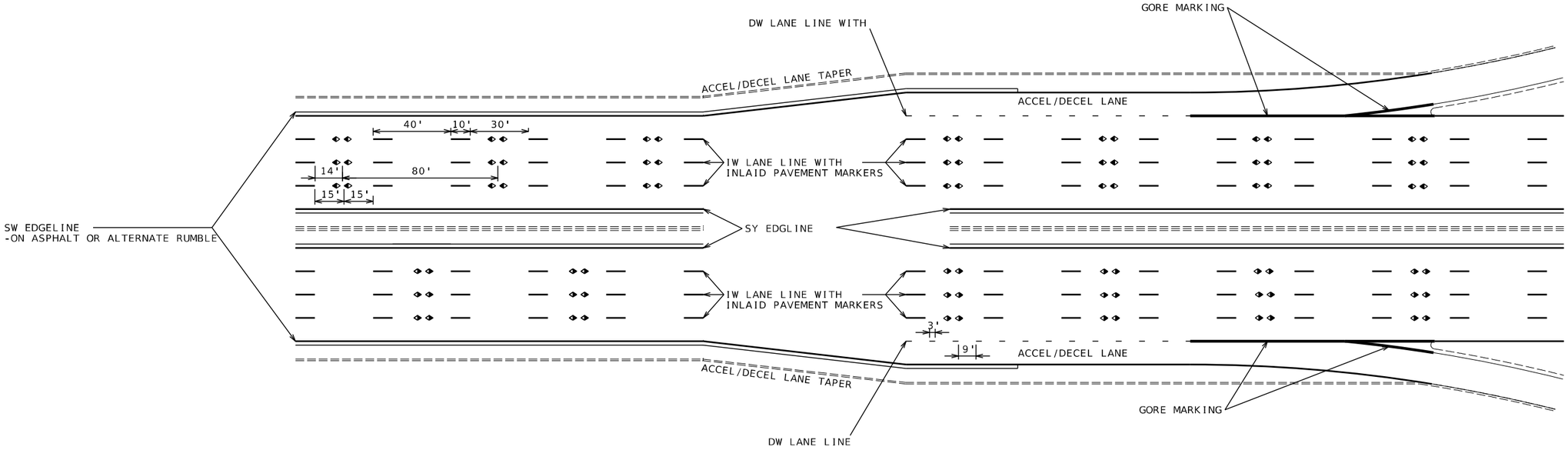

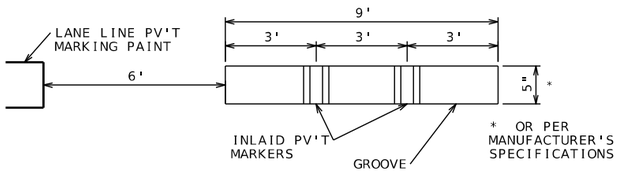

PLAN VIEW
DOUBLE INLAID
PAVEMENT MARKER DETAIL

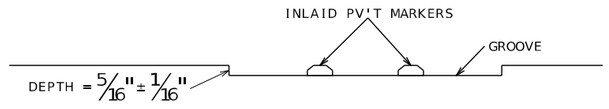

SECTION ALONG LANE LINE
DOUBLE INLAID PAVEMENT
MARKER DETAIL

NOT TO SCALE

INLAID PAVEMENT
MARKER DETAIL
SHEET 1 OF 1

STATE OF MISSOURI
EUGENE LOUIS KUEKER JR.
NUMBER PE-2010009912
PROFESSIONAL ENGINEER
THIS SHEET HAS BEEN SIGNED, SEALED, AND DATED ELECTRONICALLY.

DATE PREPARED
3/25/2026

ROUTE	STATE
I-270	MO

DISTRICT	SHEET NO.
SL	26

COUNTY
ST. LOUIS

JOB NO.
J6I3580B

CONTRACT ID.

PROJECT NO.

BRIDGE NO.

DESCRIPTION	DATE

IF A SEAL IS PRESENT ON THIS SHEET IT HAS BEEN ELECTRONICALLY SEALED AND DATED.

MISSOURI HIGHWAYS AND TRANSPORTATION COMMISSION
105 WEST CAPITOL
JEFFERSON CITY, MO 65102
1-888-ASK-MODOT (1-888-275-6636)

HDR Engineering, Inc.
1001 Highlands Plaza Drive
Suite 200
St. Louis, MO 63110-1337
314-425-8300
Certificate of Authority: 000856

PAVEMENT MARKING LEGEND

6" SW	6" SOLID WHITE PAINT - TYPE L BEADS
6" IW	6" INTERMITTENT WHITE LANE PAINT: 10' STRIPE & 30' GAP - TYPE L BEADS
6" SY	6" SOLID YELLOW PAINT - TYPE L BEADS
6" DW/DY	6" DOTTED WHITE OR YELLOW LINE: 3' STRIPE & 9' GAP - TYPE L BEADS
12" DW	12" DOTTED WHITE LANE DROP LINE: 3' STRIPE & 9' GAP - TYPE L BEADS
4" SY	4" SOLID YELLOW PAINT - TYPE P BEADS
4" DSY	4" DOUBLE SOLID YELLOW PAINT - TYPE P BEADS
4" IY	4" INTERMITTENT YELLOW PAINT - TYPE P BEADS
4" SW	4" SOLID WHITE PAINT - TYPE P BEADS
4" IW	4" INTERMITTENT WHITE PAINT - TYPE P BEADS
4" DW	4" DASHED WHITE LINE: 2' STRIPE & 4' GAP - TYPE P BEADS
6" SWC	6" SOLID WHITE CROSSWALK (PREFORMED THERMOPLASTIC)
6" SWT	6" SOLID WHITE (SPRAY THERMOPLASTIC)
6" SYT	6" SOLID YELLOW (SPRAY THERMOPLASTIC)
12" SWT	12" SOLID WHITE (SPRAY THERMOPLASTIC)
24" WSB	24" SOLID WHITE STOP BAR (PREFORMED THERMOPLASTIC)
12" WYT ▲▲▲▲▲▲▲	12" SOLID WHITE YIELD TRIANGLES (PREFORMED THERMOPLASTIC)
▮▮▮	2' X 6' WHITE CROSSWALK MARKINGS (PREFORMED THERMOPLASTIC)
↰	TURN ARROW PAVEMENT MARKING (PREFORMED THERMOPLASTIC)
ONLY	5'-10" X 8' ONLY PAVEMENT MARKING (PERFORMED THERMOPLASTIC)
⇨	LANE USAGE ARROW

NOTES:
1) BLACK CONTRAST MARKINGS ARE REQUIRED FOR ALL LANE LINES ON CONCRETE PAVEMENT (NO DIRECT PAY)
2) HBWP: HIGH BUILD WATERBORNE PAINT WITH TYPE L BEADS
3) WB: STANDARD WATERBORNE PAINT WITH TYPE P BEADS
4) FOR LOCATIONS OF PROPOSED RUMBLE STRIPS SEE MODOT STANDARD PLAN 626.00H AND STATION RANGES ON QUANTITY TABLE

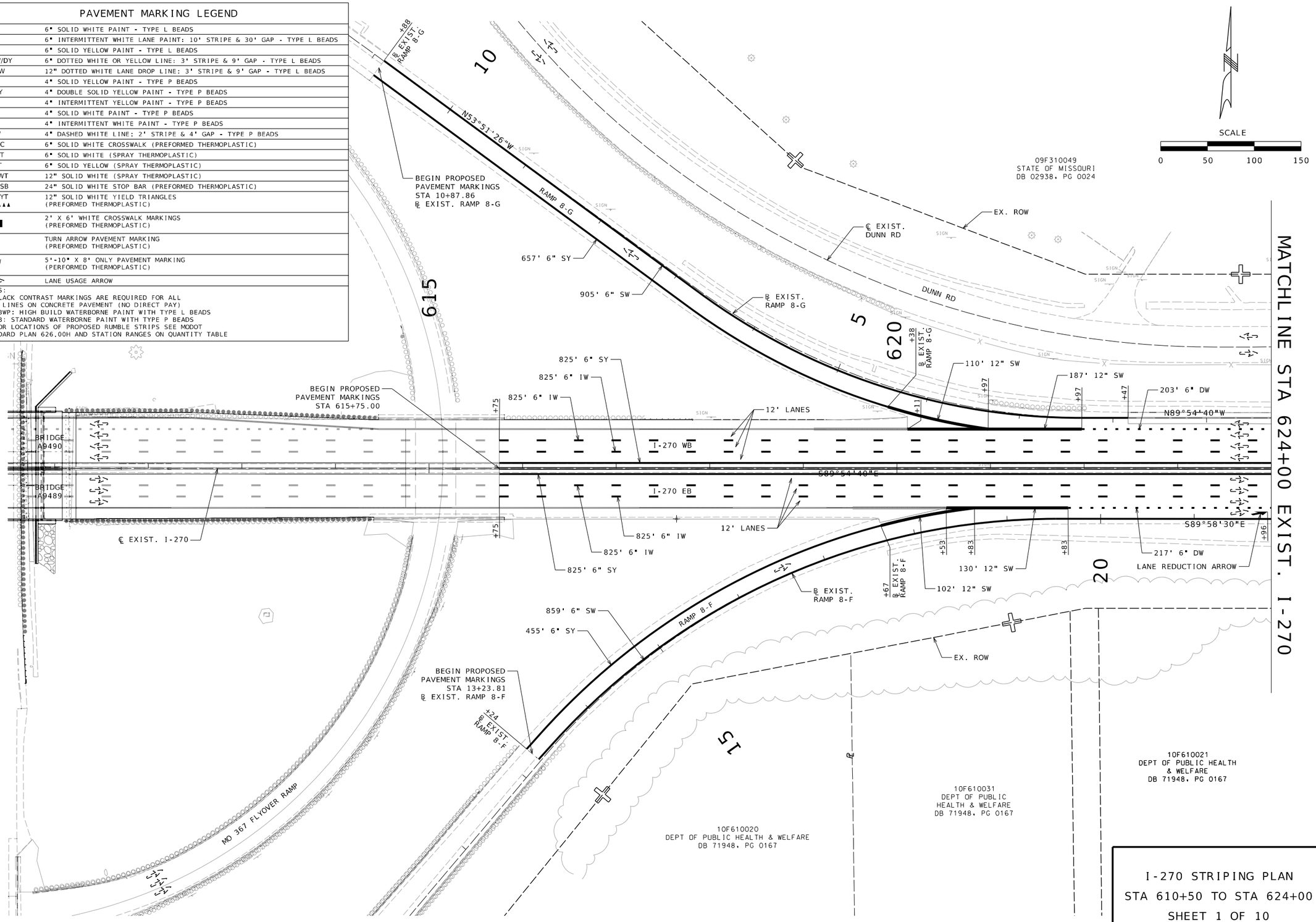

I-270 STRIPING PLAN
STA 610+50 TO STA 624+00
SHEET 1 OF 10

STATE OF MISSOURI
EUGENE LOUIS KUEKER JR.
NUMBER PE-2010009912
PROFESSIONAL ENGINEER
THIS SHEET HAS BEEN SIGNED, SEALED, AND DATED ELECTRONICALLY.

DATE PREPARED 3/25/2026
ROUTE I-270 | STATE MO
DISTRICT SL | SHEET NO. 27
COUNTY ST. LOUIS
JOB NO. J6I3580B
CONTRACT ID.
PROJECT NO.
BRIDGE NO.

DESCRIPTION	DATE

IF A SEAL IS PRESENT ON THIS SHEET IT HAS BEEN ELECTRONICALLY SEALED AND DATED.

MISSOURI HIGHWAYS AND TRANSPORTATION COMMISSION
105 WEST CAPITOL
JEFFERSON CITY, MO 65102
1-888-ASK-MODOT (1-888-275-6636)

HDR Engineering, Inc.
1001 Highlands Plaza Drive
Suite 200
St. Louis, MO 63110-1337
314-425-8300
Certificate of Authority: 000856

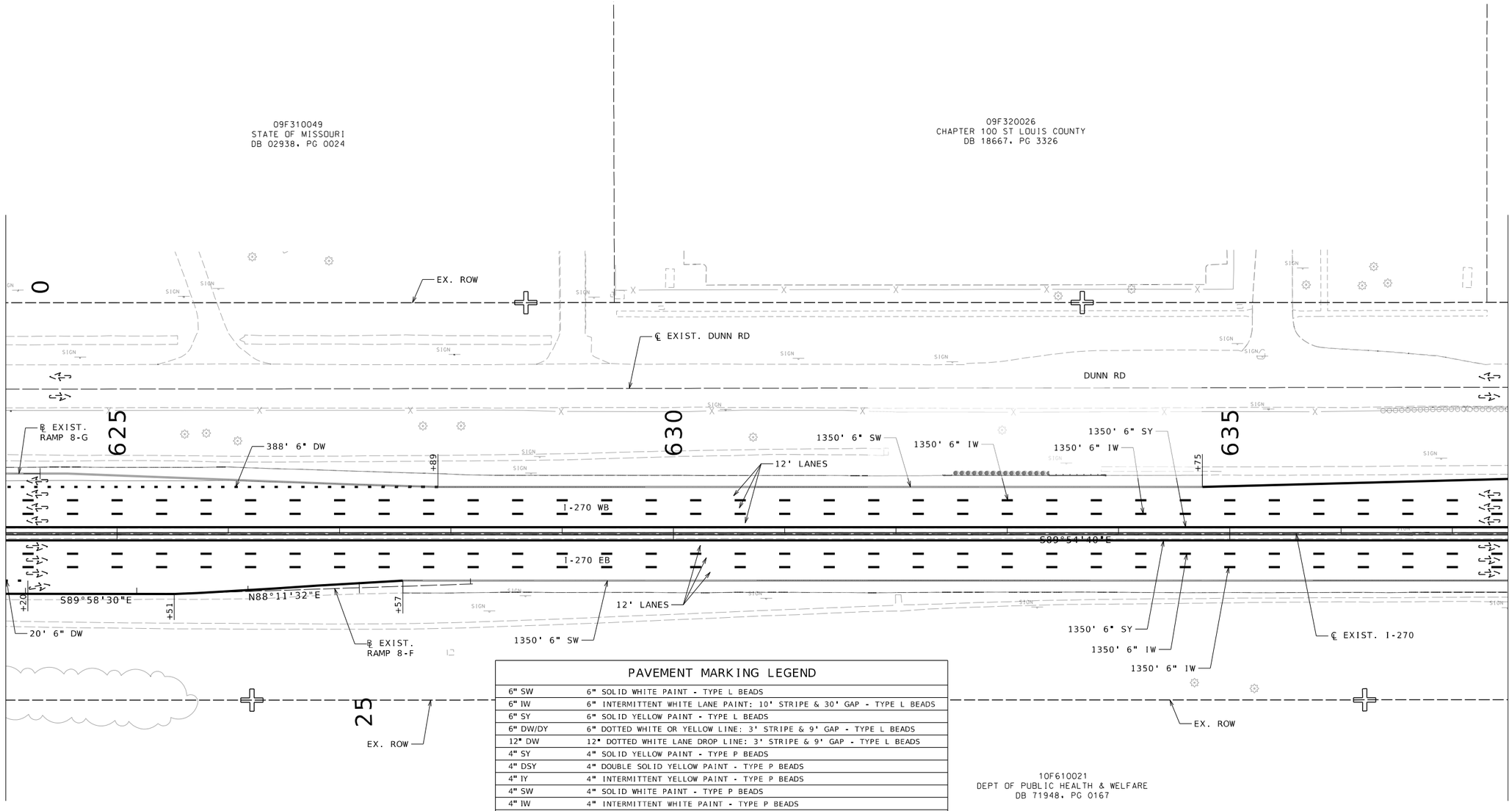

SCALE

0 50 100 150

PAVEMENT MARKING LEGEND

6" SW	6" SOLID WHITE PAINT - TYPE L BEADS
6" IW	6" INTERMITTENT WHITE LANE PAINT: 10' STRIPE & 30' GAP - TYPE L BEADS
6" SY	6" SOLID YELLOW PAINT - TYPE L BEADS
6" DW/DY	6" DOTTED WHITE OR YELLOW LINE: 3' STRIPE & 9' GAP - TYPE L BEADS
12" DW	12" DOTTED WHITE LANE DROP LINE: 3' STRIPE & 9' GAP - TYPE L BEADS
4" SY	4" SOLID YELLOW PAINT - TYPE P BEADS
4" DSY	4" DOUBLE SOLID YELLOW PAINT - TYPE P BEADS
4" IY	4" INTERMITTENT YELLOW PAINT - TYPE P BEADS
4" SW	4" SOLID WHITE PAINT - TYPE P BEADS
4" IW	4" INTERMITTENT WHITE PAINT - TYPE P BEADS
4" DW	4" DASHED WHITE LINE: 2' STRIPE & 4' GAP - TYPE P BEADS
6" SWC	6" SOLID WHITE CROSSWALK (PREFORMED THERMOPLASTIC)
6" SWT	6" SOLID WHITE (SPRAY THERMOPLASTIC)
6" SYT	6" SOLID YELLOW (SPRAY THERMOPLASTIC)
12" SWT	12" SOLID WHITE (SPRAY THERMOPLASTIC)
24" WSB	24" SOLID WHITE STOP BAR (PREFORMED THERMOPLASTIC)
12" WYT ▲▲▲▲▲▲▲	12" SOLID WHITE YIELD TRIANGLES (PREFORMED THERMOPLASTIC)
▮▮▮	2' X 6' WHITE CROSSWALK MARKINGS (PREFORMED THERMOPLASTIC)
↰	TURN ARROW PAVEMENT MARKING (PREFORMED THERMOPLASTIC)
ONLY	5'-10" X 8' ONLY PAVEMENT MARKING (PERFORMED THERMOPLASTIC)
⇄	LANE USAGE ARROW

NOTES:
1) BLACK CONTRAST MARKINGS ARE REQUIRED FOR ALL LANE LINES ON CONCRETE PAVEMENT (NO DIRECT PAY)
2) HBWP: HIGH BUILD WATERBORNE PAINT WITH TYPE L BEADS
3) WB: STANDARD WATERBORNE PAINT WITH TYPE P BEADS
4) FOR LOCATIONS OF PROPOSED RUMBLE STRIPS SEE MODOT STANDARD PLAN 626.00H AND STATION RANGES ON QUANTITY TABLE

I-270 STRIPING PLAN
STA 624+00 TO STA 637+50
SHEET 2 OF 10

STATE OF MISSOURI
EUGENE LOUIS KUEBLER JR.
NUMBER PE-2010009912
PROFESSIONAL ENGINEER

THIS SHEET HAS BEEN SIGNED, SEALED, AND DATED ELECTRONICALLY.

IF A SEAL IS PRESENT ON THIS SHEET IT HAS BEEN ELECTRONICALLY SEALED AND DATED.

DATE PREPARED	3/25/2026
ROUTE	I-270
STATE	MO
DISTRICT	SL
SHEET NO.	28
COUNTY	ST. LOUIS
JOB NO.	J6I3580B
CONTRACT ID.	
PROJECT NO.	
BRIDGE NO.	

DESCRIPTION | DATE

MISSOURI HIGHWAYS AND TRANSPORTATION COMMISSION
105 WEST CAPITOL
JEFFERSON CITY, MO 65102
1-888-ASK-MODOT (1-888-275-6636)

HDR Engineering, Inc.
1001 Highlands Plaza Drive
Suite 200
St. Louis, MO 63110-1337
314-425-8300
Certificate of Authority: 000856

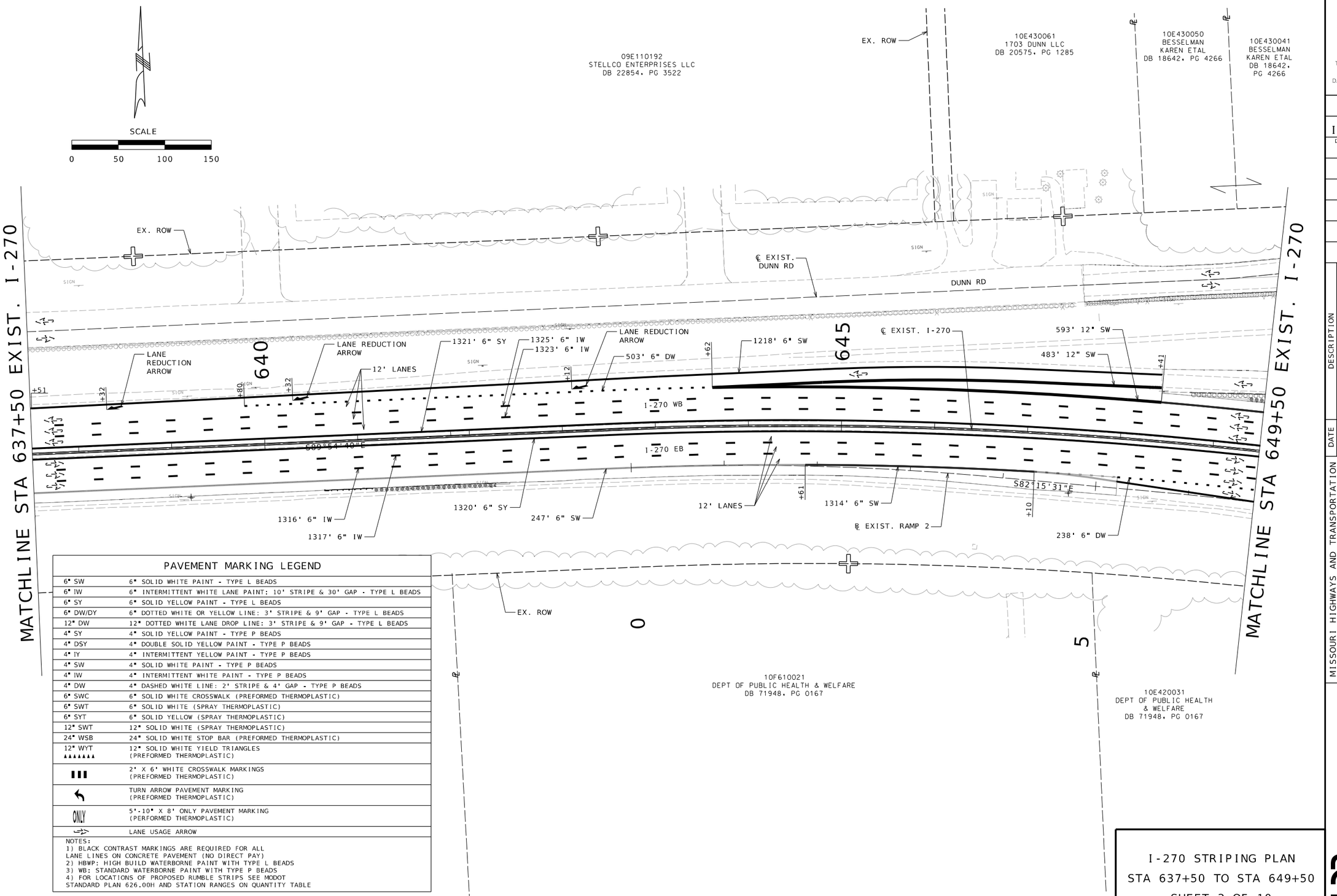

PAVEMENT MARKING LEGEND

6" SW	6" SOLID WHITE PAINT - TYPE L BEADS
6" IW	6" INTERMITTENT WHITE LANE PAINT: 10' STRIPE & 30' GAP - TYPE L BEADS
6" SY	6" SOLID YELLOW PAINT - TYPE L BEADS
6" DW/DY	6" DOTTED WHITE OR YELLOW LINE: 3' STRIPE & 9' GAP - TYPE L BEADS
12" DW	12" DOTTED WHITE LANE DROP LINE: 3' STRIPE & 9' GAP - TYPE L BEADS
4" SY	4" SOLID YELLOW PAINT - TYPE P BEADS
4" DSY	4" DOUBLE SOLID YELLOW PAINT - TYPE P BEADS
4" IY	4" INTERMITTENT YELLOW PAINT - TYPE P BEADS
4" SW	4" SOLID WHITE PAINT - TYPE P BEADS
4" IW	4" INTERMITTENT WHITE PAINT - TYPE P BEADS
4" DW	4" DASHED WHITE LINE: 2' STRIPE & 4' GAP - TYPE P BEADS
6" SWC	6" SOLID WHITE CROSSWALK (PREFORMED THERMOPLASTIC)
6" SWT	6" SOLID WHITE (SPRAY THERMOPLASTIC)
6" SYT	6" SOLID YELLOW (SPRAY THERMOPLASTIC)
12" SWT	12" SOLID WHITE (SPRAY THERMOPLASTIC)
24" WSB	24" SOLID WHITE STOP BAR (PREFORMED THERMOPLASTIC)
12" WYT ▲▲▲▲▲▲▲	12" SOLID WHITE YIELD TRIANGLES (PREFORMED THERMOPLASTIC)
▮▮▮	2' X 6' WHITE CROSSWALK MARKINGS (PREFORMED THERMOPLASTIC)
↰	TURN ARROW PAVEMENT MARKING (PREFORMED THERMOPLASTIC)
ONLY	5'-10" X 8' ONLY PAVEMENT MARKING (PERFORMED THERMOPLASTIC)
⇆	LANE USAGE ARROW

NOTES:
1) BLACK CONTRAST MARKINGS ARE REQUIRED FOR ALL LANE LINES ON CONCRETE PAVEMENT (NO DIRECT PAY)
2) HBWP: HIGH BUILD WATERBORNE PAINT WITH TYPE L BEADS
3) WB: STANDARD WATERBORNE PAINT WITH TYPE P BEADS
4) FOR LOCATIONS OF PROPOSED RUMBLE STRIPS SEE MODOT STANDARD PLAN 626.00H AND STATION RANGES ON QUANTITY TABLE

I-270 STRIPING PLAN
STA 637+50 TO STA 649+50
SHEET 3 OF 10

STATE OF MISSOURI
EUGENE LOUIS KUEKER JR.
NUMBER PE-2010009912
PROFESSIONAL ENGINEER

THIS SHEET HAS BEEN SIGNED, SEALED, AND DATED ELECTRONICALLY.

IF A SEAL IS PRESENT ON THIS SHEET IT HAS BEEN ELECTRONICALLY SEALED AND DATED.

DATE PREPARED: 3/25/2026
ROUTE: I-270 | STATE: MO
DISTRICT: SL | SHEET NO.: 29
COUNTY: ST. LOUIS
JOB NO.: J6I3580B
CONTRACT ID.:
PROJECT NO.:
BRIDGE NO.:

DESCRIPTION | DATE

MISSOURI HIGHWAYS AND TRANSPORTATION COMMISSION
105 WEST CAPITOL
JEFFERSON CITY, MO 65102
1-888-ASK-MODOT (1-888-275-6636)

HDR Engineering, Inc.
1001 Highlands Plaza Drive
Suite 200
St. Louis, MO 63110-1337
314-425-8300
Certificate of Authority: 000856

10E440107
BESSELMAN KAREN ETAL
DB 18642, PG 4266

10E430023
BESSELMAN KAREN ETAL
DB 18642, PG 4266

10E440235
HWRT MANAGEMENT
COMPANY LLC
DB 17655, PG 3858

SECTION 33
SECTION 34

10E440244
DDI MEDIA
DB 18041, PG 2004

10E440060
HUSTON KENNETH L ETAL
DB 6882, PG 1345

℄ EXIST.
BELLEFONTAINE RD

BELLEFONTAINE RD

EX. ROW

10E440253
FRANKE RUTH
TRUSTEE
DB 16018, PG 0899

10E440262
CROSS FAMILY REAL ESTATE
LIMITED PARTNERSHIP
DB 17018, PG 2747

SECTION 34
US SURVEY 2713

℄ EXIST.
DUNN RD

EX. ROW

10E440024
WALLIS OIL CO INC
DB 16845, PG 0689

MATCHLINE STA 649+50 EXIST. I-270

650

655

660

MATCHLINE STA 663+00 EXIST. I-270

DUNN RD

522' 6" IW
521' 6" IW
520' 6" SY

END PROPOSED
PAVEMENT MARKINGS
TIE INTO JSL0021
STA 654+70.00

12' LANES
522' 6" SW

+70

I-270 WB

I-270 EB

S77°57'25"E

+29

146' 6" DW
520' 6" SY
+98
12' LANES
518' 6" IW
519' 6" IW
231' 12" SW
230' 12" SW
+44 ℄ EXIST RAMP 2
+85 ℄ EXIST RAMP 2

680' 6" SY
377' 6" SW
℄ EXIST. I-270
+91 ℄ EXIST. RAMP 2
+26 ℄ EXIST. RAMP 2
118' 6" SY
℄ EXIST. RAMP 4
RAMP 4

RAMP 2
S70°41'14"E

1057' 6" SW
+04 ℄ EXIST. RAMP 2
+48 ℄ EXIST. RAMP 2
377' 6" SW
℄ EXIST. RAMP 2
34' 6" SW
+13 ℄ EXIST. RAMP 4
114' 6" SW

EX. ROW

END PROPOSED
PAVEMENT MARKINGS
TIE INTO JSL0021
STA 17+25.52
℄ EXIST. RAMP 2

BEGIN PROPOSED
PAVEMENT MARKINGS
TIE INTO JSL0021
STA 1+13.00
℄ EXIST. RAMP 4

EX. ROW

10E440161
JOE'S SPH LLC
DB 20448, PG 1133

10E420031
DEPT OF PUBLIC HEALTH & WELFARE
DB 71948, PG 0167

15

0

SCALE
0 50 100 150

PAVEMENT MARKING LEGEND

6" SW	6" SOLID WHITE PAINT - TYPE L BEADS
6" IW	6" INTERMITTENT WHITE LANE PAINT: 10' STRIPE & 30' GAP - TYPE L BEADS
6" SY	6" SOLID YELLOW PAINT - TYPE L BEADS
6" DW/DY	6" DOTTED WHITE OR YELLOW LINE: 3' STRIPE & 9' GAP - TYPE L BEADS
12" DW	12" DOTTED WHITE LANE DROP LINE: 3' STRIPE & 9' GAP - TYPE L BEADS
4" SY	4" SOLID YELLOW PAINT - TYPE P BEADS
4" DSY	4" DOUBLE SOLID YELLOW PAINT - TYPE P BEADS
4" IY	4" INTERMITTENT YELLOW PAINT - TYPE P BEADS
4" SW	4" SOLID WHITE PAINT - TYPE P BEADS
4" IW	4" INTERMITTENT WHITE PAINT - TYPE P BEADS
4" DW	4" DASHED WHITE LINE: 2' STRIPE & 4' GAP - TYPE P BEADS
6" SWC	6" SOLID WHITE CROSSWALK (PREFORMED THERMOPLASTIC)
6" SWT	6" SOLID WHITE (SPRAY THERMOPLASTIC)
6" SYT	6" SOLID YELLOW (SPRAY THERMOPLASTIC)
12" SWT	12" SOLID WHITE (SPRAY THERMOPLASTIC)
24" WSB	24" SOLID WHITE STOP BAR (PREFORMED THERMOPLASTIC)
12" WYT	12" SOLID WHITE YIELD TRIANGLES (PREFORMED THERMOPLASTIC)
	2' X 6' WHITE CROSSWALK MARKINGS (PREFORMED THERMOPLASTIC)
	TURN ARROW PAVEMENT MARKING (PREFORMED THERMOPLASTIC)
ONLY	5'-10" X 8' ONLY PAVEMENT MARKING (PERFORMED THERMOPLASTIC)
	LANE USAGE ARROW

NOTES:
1) BLACK CONTRAST MARKINGS ARE REQUIRED FOR ALL LANE LINES ON CONCRETE PAVEMENT (NO DIRECT PAY)
2) HBWP: HIGH BUILD WATERBORNE PAINT WITH TYPE L BEADS
3) WB: STANDARD WATERBORNE PAINT WITH TYPE P BEADS
4) FOR LOCATIONS OF PROPOSED RUMBLE STRIPS SEE MODOT STANDARD PLAN 626.00H AND STATION RANGES ON QUANTITY TABLE

I-270 STRIPING PLAN
STA 649+50 TO STA 663+00
SHEET 4 OF 10

STATE OF MISSOURI
EUGENE LOUIS KUEKER JR.
NUMBER PE-2010009912
PROFESSIONAL ENGINEER

THIS SHEET HAS BEEN SIGNED, SEALED, AND DATED ELECTRONICALLY.

IF A SEAL IS PRESENT ON THIS SHEET IT HAS BEEN ELECTRONICALLY SEALED AND DATED.

DATE PREPARED: 3/25/2026
ROUTE: I-270 | STATE: MO
DISTRICT: SL | SHEET NO.: 30
COUNTY: ST. LOUIS
JOB NO.: J6I3580B
CONTRACT ID.:
PROJECT NO.:
BRIDGE NO.:

DATE	DESCRIPTION

MISSOURI HIGHWAYS AND TRANSPORTATION COMMISSION
105 WEST CAPITOL
JEFFERSON CITY, MO 65102
1-888-ASK-MODOT (1-888-275-6636)

HDR Engineering, Inc.
1001 Highlands Plaza Drive
Suite 200
St. Louis, MO 63110-1337
314-425-8300
Certificate of Authority: 000856

MATCHLINE STA 663+00 EXIST. I-270

MATCHLINE STA 676+50 EXIST. I-270

10E530114
AMI KUSH INC
DB 20965, PG 1096

10E530282
WALLIS OIL CO INC
DB 18177, PG 0633

10E440033
WALLIS OIL CO INC
DB 16830, PG 1072

10E530051
D&T COLE
PROPERTIES LLC
DB 17196, PG 2965

10E530444
RJCA LLC
DB 22216, PG 796

10E530392
270 PROPERTIES LLC
DB 19646, PG 3156

10E530031
CRYSTAL FOODS
& GAS INC
DB 17973, PG 1260

10E530013
CRYSTAL FOODS
& GAS INC
DB 17973, PG 1260

10E530316
S S & CO OF
DUNN STREET INC
DB 17688, PG 3606

EX. ROW

℄ EXIST.
DUNN RD

DUNN RD

665

670

675

BEGIN PROPOSED
PAVEMENT MARKINGS
TIE INTO JSL0021
STA 667+20.00

12' LANES

930' 6" SY

930' 6" IW

930' 6" IW

℄ EXIST. I-270

I-270 WB

I-270 EB

S77°57'25"E

S77°57'26"E

474' 6" SY

℄ EXIST. RAMP 4

RAMP 4

S85°43'01"E

585' 6" SW

℄ EXIST. RAMP 4

270' 12" SW

266' 12" SW

12' LANES

555' 6" SW

LANE REDUCTION ARROW

300' 6" DW

930' 6" IW

930' 6" IW

930' 6" SY

+20
+65
+20
+80
+35
+10
+55
+35
+58
+36
+04

10

5

US SURVEY 2713

US SURVEY 1112

10E440170
CIRCLE OF LIGHT CHURCH
DB 18541, PG 2648

EX. ROW

10E510204
KNICHEL JAMES RICHARDSON
& MARY LEE H
DB 6372, PG 2018

SCALE
0 50 100 150

PAVEMENT MARKING LEGEND

6" SW	6" SOLID WHITE PAINT - TYPE L BEADS
6" IW	6" INTERMITTENT WHITE LANE PAINT: 10' STRIPE & 30' GAP - TYPE L BEADS
6" SY	6" SOLID YELLOW PAINT - TYPE L BEADS
6" DW/DY	6" DOTTED WHITE OR YELLOW LINE: 3' STRIPE & 9' GAP - TYPE L BEADS
12" DW	12" DOTTED WHITE LANE DROP LINE: 3' STRIPE & 9' GAP - TYPE L BEADS
4" SY	4" SOLID YELLOW PAINT - TYPE P BEADS
4" DSY	4" DOUBLE SOLID YELLOW PAINT - TYPE P BEADS
4" IY	4" INTERMITTENT YELLOW PAINT - TYPE P BEADS
4" SW	4" SOLID WHITE PAINT - TYPE P BEADS
4" IW	4" INTERMITTENT WHITE PAINT - TYPE P BEADS
4" DW	4" DASHED WHITE LINE: 2' STRIPE & 4' GAP - TYPE P BEADS
6" SWC	6" SOLID WHITE CROSSWALK (PREFORMED THERMOPLASTIC)
6" SWT	6" SOLID WHITE (SPRAY THERMOPLASTIC)
6" SYT	6" SOLID YELLOW (SPRAY THERMOPLASTIC)
12" SWT	12" SOLID WHITE (SPRAY THERMOPLASTIC)
24" WSB	24" SOLID WHITE STOP BAR (PREFORMED THERMOPLASTIC)
12" WYT ▲▲▲▲▲▲▲	12" SOLID WHITE YIELD TRIANGLES (PREFORMED THERMOPLASTIC)
▮▮▮	2' X 6' WHITE CROSSWALK MARKINGS (PREFORMED THERMOPLASTIC)
↰	TURN ARROW PAVEMENT MARKING (PREFORMED THERMOPLASTIC)
ONLY	5'-10" X 8' ONLY PAVEMENT MARKING (PERFORMED THERMOPLASTIC)
⇨	LANE USAGE ARROW

NOTES:
1) BLACK CONTRAST MARKINGS ARE REQUIRED FOR ALL LANE LINES ON CONCRETE PAVEMENT (NO DIRECT PAY)
2) HBWP: HIGH BUILD WATERBORNE PAINT WITH TYPE L BEADS
3) WB: STANDARD WATERBORNE PAINT WITH TYPE P BEADS
4) FOR LOCATIONS OF PROPOSED RUMBLE STRIPS SEE MODOT STANDARD PLAN 626.00H AND STATION RANGES ON QUANTITY TABLE

I-270 STRIPING PLAN
STA 663+00 TO STA 676+50
SHEET 5 OF 10

STATE OF MISSOURI
EUGENE LOUIS KUEKER JR.
NUMBER PE-2011000912
PROFESSIONAL ENGINEER

THIS SHEET HAS BEEN SIGNED, SEALED, AND DATED ELECTRONICALLY.

IF A SEAL IS PRESENT ON THIS SHEET IT HAS BEEN ELECTRONICALLY SEALED AND DATED.

DATE PREPARED
3/25/2026

ROUTE	STATE
I-270	MO
DISTRICT	SHEET NO.
SL	31

COUNTY
ST. LOUIS

JOB NO.
J6I3580B

CONTRACT ID.

PROJECT NO.

BRIDGE NO.

DESCRIPTION	DATE

MISSOURI HIGHWAYS AND TRANSPORTATION COMMISSION
105 WEST CAPITOL
JEFFERSON CITY, MO 65102
1-888-ASK-MODOT (1-888-275-6636)

HDR Engineering, Inc.
1001 Highlands Plaza Drive
Suite 200
St. Louis, MO 63110-1337
314-425-8300
Certificate of Authority: 000856

c:\pwworking\central01\d5178262\031_PM06_J6I3580B_I50_I-270.dgn 1:53:45 PM 3/25/2026

MATCHLINE STA 676+50 EXIST. I-270

MATCHLINE STA 690+00 EXIST. I-270

10E530031
CRYSTAL FOODS
& GAS INC
DB 17973, PG 1260

10E540072
PFITZNER EBERHARD
REV LIVING TRUST
DB 21885, PG 410

10E540061
ADAMS JOHN G
PATRICIA A H/W
DB 08611, PG 2437

10E540050
MASON DONNY RAY
& JO ANN H/W
DB 21734, PG 1624

10E540032
BUSKEN CONSTRUCTION
COMPANY
DB 13571, PG 2060

10E540344
USI 270 LP
DB 09197, PG 0212

10E630205
CORGAF LLC
DB 20532, PG 5022

SCALE
0 50 100 150

EX. ROW

DUNN RD

℄ EXIST.
DUNN RD

680

685

+98

1350' 6" IW
1350' 6" IW
1350' 6" SY

12' LANES

402' 6" SW

I-270 WB

377°57'25"E

I-270 EB

1350' 6" SW

1350' 6" SY
1350' 6" IW
1350' 6" IW

12' LANES

℄ EXIST. I-270

PERSHALL RD

EX. ROW

10E520113
WEISE MICHAEL G
& MCLAUGHLIN SUSAN H/W TRS
DB 17818, PG 1039

10E520063
RAFTERY
GREGORY D
DB 21472,
PG 3523

10E520041
WEISE MICHAEL G
& MCLAUGHLIN SUSAN H/W TRS
DB 21528, PG 374

PAVEMENT MARKING LEGEND

6" SW	6" SOLID WHITE PAINT - TYPE L BEADS
6" IW	6" INTERMITTENT WHITE LANE PAINT: 10' STRIPE & 30' GAP - TYPE L BEADS
6" SY	6" SOLID YELLOW PAINT - TYPE L BEADS
6" DW/DY	6" DOTTED WHITE OR YELLOW LINE: 3' STRIPE & 9' GAP - TYPE L BEADS
12" DW	12" DOTTED WHITE LANE DROP LINE: 3' STRIPE & 9' GAP - TYPE L BEADS
4" SY	4" SOLID YELLOW PAINT - TYPE P BEADS
4" DSY	4" DOUBLE SOLID YELLOW PAINT - TYPE P BEADS
4" IY	4" INTERMITTENT YELLOW PAINT - TYPE P BEADS
4" SW	4" SOLID WHITE PAINT - TYPE P BEADS
4" IW	4" INTERMITTENT WHITE PAINT - TYPE P BEADS
4" DW	4" DASHED WHITE LINE: 2' STRIPE & 4' GAP - TYPE P BEADS
6" SWC	6" SOLID WHITE CROSSWALK (PREFORMED THERMOPLASTIC)
6" SWT	6" SOLID WHITE (SPRAY THERMOPLASTIC)
6" SYT	6" SOLID YELLOW (SPRAY THERMOPLASTIC)
12" SWT	12" SOLID WHITE (SPRAY THERMOPLASTIC)
24" WSB	24" SOLID WHITE STOP BAR (PREFORMED THERMOPLASTIC)
12" WYT	12" SOLID WHITE YIELD TRIANGLES (PREFORMED THERMOPLASTIC)
	2' X 6' WHITE CROSSWALK MARKINGS (PREFORMED THERMOPLASTIC)
	TURN ARROW PAVEMENT MARKING (PREFORMED THERMOPLASTIC)
ONLY	5'-10" X 8' ONLY PAVEMENT MARKING (PERFORMED THERMOPLASTIC)
	LANE USAGE ARROW

NOTES:
1) BLACK CONTRAST MARKINGS ARE REQUIRED FOR ALL LANE LINES ON CONCRETE PAVEMENT (NO DIRECT PAY)
2) HBWP: HIGH BUILD WATERBORNE PAINT WITH TYPE L BEADS
3) WB: STANDARD WATERBORNE PAINT WITH TYPE P BEADS
4) FOR LOCATIONS OF PROPOSED RUMBLE STRIPS SEE MODOT STANDARD PLAN 626.00H AND STATION RANGES ON QUANTITY TABLE

I-270 STRIPING PLAN
STA 676+50 TO STA 690+00
SHEET 6 OF 10

STATE OF MISSOURI
EUGENE LOUIS KUEKER JR.
NUMBER PE-2010009912
PROFESSIONAL ENGINEER
THIS SHEET HAS BEEN SIGNED, SEALED, AND DATED ELECTRONICALLY.

IF A SEAL IS PRESENT ON THIS SHEET IT HAS BEEN ELECTRONICALLY SEALED AND DATED.

DATE PREPARED: 3/25/2026
ROUTE: I-270 | STATE: MO
DISTRICT: SL | SHEET NO.: 32
COUNTY: ST. LOUIS
JOB NO.: J6I3580B
CONTRACT ID.:
PROJECT NO.:
BRIDGE NO.:

DESCRIPTION | DATE

MISSOURI HIGHWAYS AND TRANSPORTATION COMMISSION
105 WEST CAPITOL
JEFFERSON CITY, MO 65102
1-888-ASK-MODOT (1-888-275-6636)

HDR Engineering, Inc.
1001 Highlands Plaza Drive
Suite 200
St. Louis, MO 63110-1337
314-425-8300
Certificate of Authority: 000856

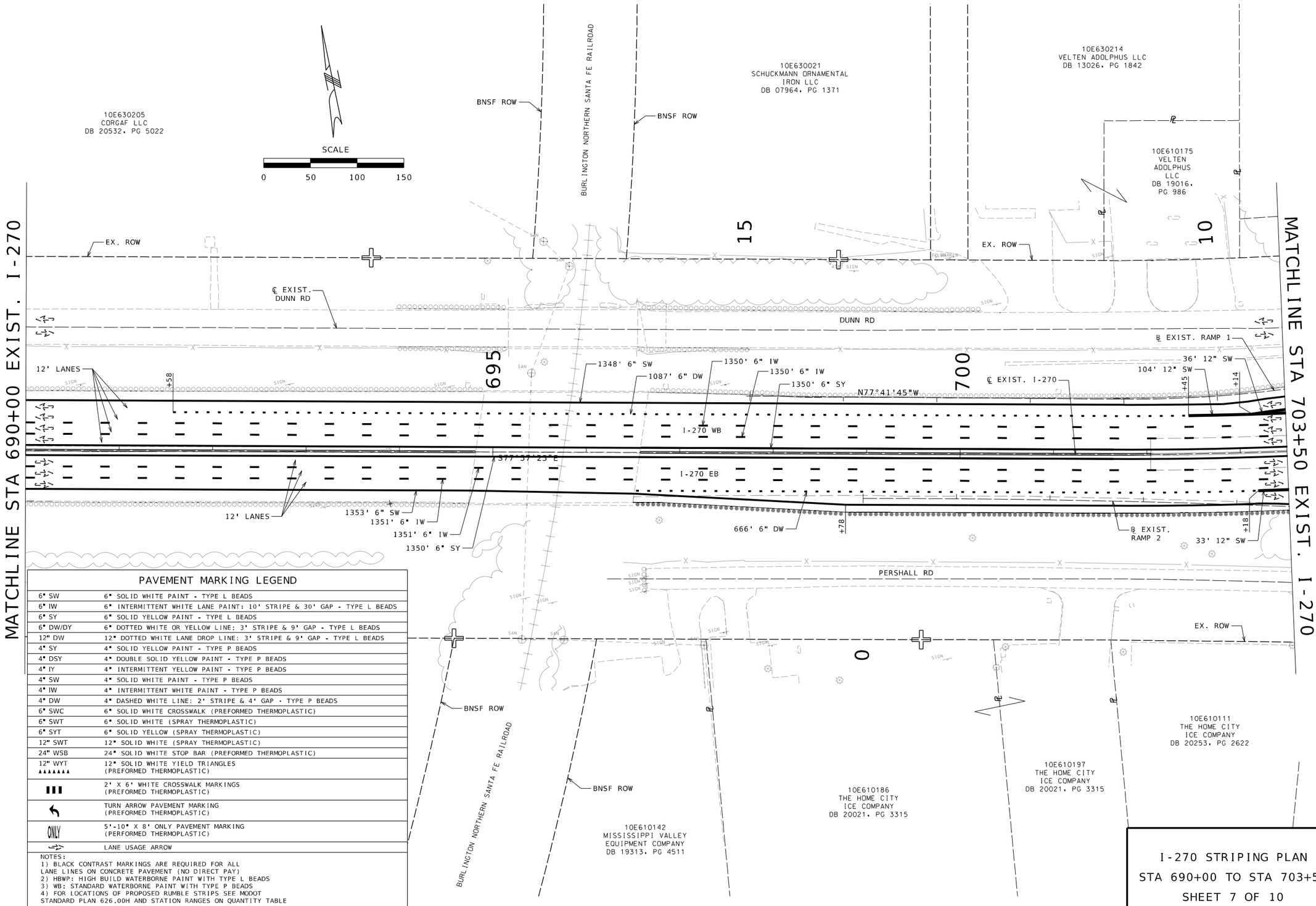

PAVEMENT MARKING LEGEND

6" SW	6" SOLID WHITE PAINT - TYPE L BEADS
6" IW	6" INTERMITTENT WHITE LANE PAINT: 10' STRIPE & 30' GAP - TYPE L BEADS
6" SY	6" SOLID YELLOW PAINT - TYPE L BEADS
6" DW/DY	6" DOTTED WHITE OR YELLOW LINE: 3' STRIPE & 9' GAP - TYPE L BEADS
12" DW	12" DOTTED WHITE LANE DROP LINE: 3' STRIPE & 9' GAP - TYPE L BEADS
4" SY	4" SOLID YELLOW PAINT - TYPE P BEADS
4" DSY	4" DOUBLE SOLID YELLOW PAINT - TYPE P BEADS
4" IY	4" INTERMITTENT YELLOW PAINT - TYPE P BEADS
4" SW	4" SOLID WHITE PAINT - TYPE P BEADS
4" IW	4" INTERMITTENT WHITE PAINT - TYPE P BEADS
4" DW	4" DASHED WHITE LINE: 2' STRIPE & 4' GAP - TYPE P BEADS
6" SWC	6" SOLID WHITE CROSSWALK (PREFORMED THERMOPLASTIC)
6" SWT	6" SOLID WHITE (SPRAY THERMOPLASTIC)
6" SYT	6" SOLID YELLOW (SPRAY THERMOPLASTIC)
12" SWT	12" SOLID WHITE (SPRAY THERMOPLASTIC)
24" WSB	24" SOLID WHITE STOP BAR (PREFORMED THERMOPLASTIC)
12" WYT	12" SOLID WHITE YIELD TRIANGLES (PREFORMED THERMOPLASTIC)
	2' X 6' WHITE CROSSWALK MARKINGS (PREFORMED THERMOPLASTIC)
	TURN ARROW PAVEMENT MARKING (PREFORMED THERMOPLASTIC)
ONLY	5'-10" X 8' ONLY PAVEMENT MARKING (PERFORMED THERMOPLASTIC)
	LANE USAGE ARROW

NOTES:
1) BLACK CONTRAST MARKINGS ARE REQUIRED FOR ALL LANE LINES ON CONCRETE PAVEMENT (NO DIRECT PAY)
2) HBWP: HIGH BUILD WATERBORNE PAINT WITH TYPE L BEADS
3) WB: STANDARD WATERBORNE PAINT WITH TYPE P BEADS
4) FOR LOCATIONS OF PROPOSED RUMBLE STRIPS SEE MODOT STANDARD PLAN 626.00H AND STATION RANGES ON QUANTITY TABLE

I-270 STRIPING PLAN
STA 690+00 TO STA 703+50
SHEET 7 OF 10

STATE OF MISSOURI
EUGENE LOUIS KUEKER JR.
NUMBER PE-2010009912
PROFESSIONAL ENGINEER
THIS SHEET HAS BEEN SIGNED, SEALED, AND DATED ELECTRONICALLY.

IF A SEAL IS PRESENT ON THIS SHEET IT HAS BEEN ELECTRONICALLY SEALED AND DATED.

DATE PREPARED: 3/25/2026
ROUTE: I-270 | STATE: MO
DISTRICT: SL | SHEET NO.: 33
COUNTY: ST. LOUIS
JOB NO.: J6I3580B
CONTRACT ID.:
PROJECT NO.:
BRIDGE NO.:

DESCRIPTION | DATE

MISSOURI HIGHWAYS AND TRANSPORTATION COMMISSION
105 WEST CAPITOL
JEFFERSON CITY, MO 65102
1-888-ASK-MODOT (1-888-275-6636)

HDR Engineering, Inc.
1001 Highlands Plaza Drive
Suite 200
St. Louis, MO 63110-1337
314-425-8300
Certificate of Authority: 000856

PAVEMENT MARKING LEGEND

6" SW	6" SOLID WHITE PAINT - TYPE L BEADS
6" IW	6" INTERMITTENT WHITE LANE PAINT: 10' STRIPE & 30' GAP - TYPE L BEADS
6" SY	6" SOLID YELLOW PAINT - TYPE L BEADS
6" DW/DY	6" DOTTED WHITE OR YELLOW LINE: 3' STRIPE & 9' GAP - TYPE L BEADS
12" DW	12" DOTTED WHITE LANE DROP LINE: 3' STRIPE & 9' GAP - TYPE L BEADS
4" SY	4" SOLID YELLOW PAINT - TYPE P BEADS
4" DSY	4" DOUBLE SOLID YELLOW PAINT - TYPE P BEADS
4" IY	4" INTERMITTENT YELLOW PAINT - TYPE P BEADS
4" SW	4" SOLID WHITE PAINT - TYPE P BEADS
4" IW	4" INTERMITTENT WHITE PAINT - TYPE P BEADS
4" DW	4" DASHED WHITE LINE: 2' STRIPE & 4' GAP - TYPE P BEADS
6" SWC	6" SOLID WHITE CROSSWALK (PREFORMED THERMOPLASTIC)
6" SWT	6" SOLID WHITE (SPRAY THERMOPLASTIC)
6" SYT	6" SOLID YELLOW (SPRAY THERMOPLASTIC)
12" SWT	12" SOLID WHITE (SPRAY THERMOPLASTIC)
24" WSB	24" SOLID WHITE STOP BAR (PREFORMED THERMOPLASTIC)
12" WYT ▲▲▲▲▲▲▲	12" SOLID WHITE YIELD TRIANGLES (PREFORMED THERMOPLASTIC)
▮▮▮	2' X 6' WHITE CROSSWALK MARKINGS (PREFORMED THERMOPLASTIC)
↰	TURN ARROW PAVEMENT MARKING (PREFORMED THERMOPLASTIC)
ONLY	5'-10" X 8' ONLY PAVEMENT MARKING (PERFORMED THERMOPLASTIC)
⇆	LANE USAGE ARROW

NOTES:
1) BLACK CONTRAST MARKINGS ARE REQUIRED FOR ALL LANE LINES ON CONCRETE PAVEMENT (NO DIRECT PAY)
2) HBWP: HIGH BUILD WATERBORNE PAINT WITH TYPE L BEADS
3) WB: STANDARD WATERBORNE PAINT WITH TYPE P BEADS
4) FOR LOCATIONS OF PROPOSED RUMBLE STRIPS SEE MODOT STANDARD PLAN 626.00H AND STATION RANGES ON QUANTITY TABLE

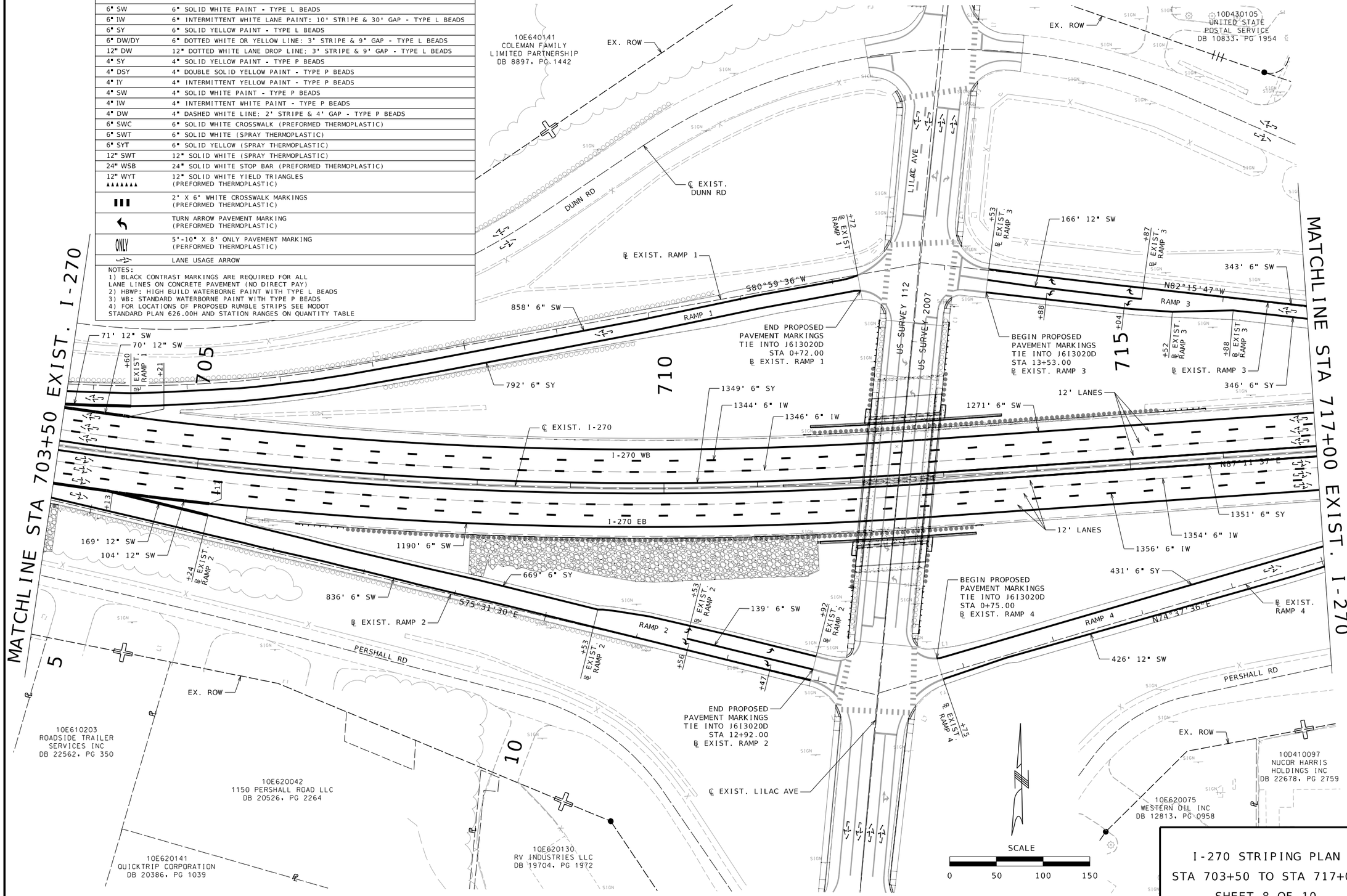

I-270 STRIPING PLAN
STA 703+50 TO STA 717+00
SHEET 8 OF 10

STATE OF MISSOURI
EUGENE LOUIS KUEBLER JR.
NUMBER PE-2010000912
PROFESSIONAL ENGINEER

THIS SHEET HAS BEEN SIGNED, SEALED, AND DATED ELECTRONICALLY.

IF A SEAL IS PRESENT ON THIS SHEET IT HAS BEEN ELECTRONICALLY SEALED AND DATED.

DATE PREPARED: 3/25/2026
ROUTE: I-270 | STATE: MO
DISTRICT: SL | SHEET NO.: 34
COUNTY: ST. LOUIS
JOB NO.: J6I3580B
CONTRACT ID.:
PROJECT NO.:
BRIDGE NO.:

DESCRIPTION	DATE

MISSOURI HIGHWAYS AND TRANSPORTATION COMMISSION
105 WEST CAPITOL
JEFFERSON CITY, MO 65102
1-888-ASK-MODOT (1-888-275-6636)

HDR Engineering, Inc.
1001 Highlands Plaza Drive
Suite 200
St. Louis, MO 63110-1337
314-425-8300
Certificate of Authority: 000856

MATCHLINE STA 717+00 EXIST. I-270

MATCHLINE STA 730+50 EXIST. I-270

10D430224
PR RT II LLC
DB 20926, PG 2186

10D440225
RIVER TRACE LLC
DB 22920, PG 829

EX. ROW

℄ EXIST. DUNN RD

DUNN RD

N82°15'47"W

℄ EXIST. RAMP 3

RAMP 3

375' 6" SW

382' 6" SY

169' 12" SW

267' 12" SW

12' LANES

454' 6" DW

1350' 6" IW

1350' 6" SY

1359' 6" SW

S89°34'18"W

I-270 WB

I-270 EB

N87°11'37"E

207' 6" SY

RAMP 4

℄ EXIST. RAMP 4

N74°37'36"E

℄ EXIST. RAMP 4

202' 6" SW

159' 12" SW

103' 12" SW

271' 6" DW

LANE REDUCTION ARROW

N86°52'15"E

N85°57'05"E

℄ EXIST. I-270

1350' 6" IW

1358' 6" SW

1350' 6" SY

PERSHALL RD

EX. ROW

10D410097
NUCOR HARRIS HOLDINGS INC
DB 22678, PG 2759

10D420104
TEMPLE OF PRAISE CHURCH
DB 19022, PG 709

10D410086
REPUBLIC OF PRESTON LLC
DB 21402, PG 2259

PAVEMENT MARKING LEGEND

6" SW	6" SOLID WHITE PAINT - TYPE L BEADS
6" IW	6" INTERMITTENT WHITE LANE PAINT: 10' STRIPE & 30' GAP - TYPE L BEADS
6" SY	6" SOLID YELLOW PAINT - TYPE L BEADS
6" DW/DY	6" DOTTED WHITE OR YELLOW LINE: 3' STRIPE & 9' GAP - TYPE L BEADS
12" DW	12" DOTTED WHITE LANE DROP LINE: 3' STRIPE & 9' GAP - TYPE L BEADS
4" SY	4" SOLID YELLOW PAINT - TYPE P BEADS
4" DSY	4" DOUBLE SOLID YELLOW PAINT - TYPE P BEADS
4" IY	4" INTERMITTENT YELLOW PAINT - TYPE P BEADS
4" SW	4" SOLID WHITE PAINT - TYPE P BEADS
4" IW	4" INTERMITTENT WHITE PAINT - TYPE P BEADS
4" DW	4" DASHED WHITE LINE: 2' STRIPE & 4' GAP - TYPE P BEADS
6" SWC	6" SOLID WHITE CROSSWALK (PREFORMED THERMOPLASTIC)
6" SWT	6" SOLID WHITE (SPRAY THERMOPLASTIC)
6" SYT	6" SOLID YELLOW (SPRAY THERMOPLASTIC)
12" SWT	12" SOLID WHITE (SPRAY THERMOPLASTIC)
24" WSB	24" SOLID WHITE STOP BAR (PREFORMED THERMOPLASTIC)
12" WYT	12" SOLID WHITE YIELD TRIANGLES (PREFORMED THERMOPLASTIC)
	2' X 6' WHITE CROSSWALK MARKINGS (PREFORMED THERMOPLASTIC)
	TURN ARROW PAVEMENT MARKING (PREFORMED THERMOPLASTIC)
ONLY	5'-10" X 8' ONLY PAVEMENT MARKING (PERFORMED THERMOPLASTIC)
	LANE USAGE ARROW

NOTES:
1) BLACK CONTRAST MARKINGS ARE REQUIRED FOR ALL LANE LINES ON CONCRETE PAVEMENT (NO DIRECT PAY)
2) HBWP: HIGH BUILD WATERBORNE PAINT WITH TYPE L BEADS
3) WB: STANDARD WATERBORNE PAINT WITH TYPE P BEADS
4) FOR LOCATIONS OF PROPOSED RUMBLE STRIPS SEE MODOT STANDARD PLAN 626.00H AND STATION RANGES ON QUANTITY TABLE

SCALE
0 50 100 150

I-270 STRIPING PLAN
STA 717+00 TO STA 730+50
SHEET 9 OF 10

STATE OF MISSOURI
EUGENE LOUIS KUEKER JR.
NUMBER PE-2010009912
PROFESSIONAL ENGINEER

THIS SHEET HAS BEEN SIGNED, SEALED, AND DATED ELECTRONICALLY.

IF A SEAL IS PRESENT ON THIS SHEET IT HAS BEEN ELECTRONICALLY SEALED AND DATED.

DATE PREPARED: 3/25/2026

ROUTE	STATE
I-270	MO
DISTRICT	SHEET NO.
SL	35

COUNTY: ST. LOUIS
JOB NO.: J6I3580B
CONTRACT ID.:
PROJECT NO.:
BRIDGE NO.:

DESCRIPTION	DATE

MISSOURI HIGHWAYS AND TRANSPORTATION COMMISSION
105 WEST CAPITOL
JEFFERSON CITY, MO 65102
1-888-ASK-MODOT (1-888-275-6636)

HDR Engineering, Inc.
1001 Highlands Plaza Drive
Suite 200
St. Louis, MO 63110-1337
314-425-8300
Certificate of Authority: 000856

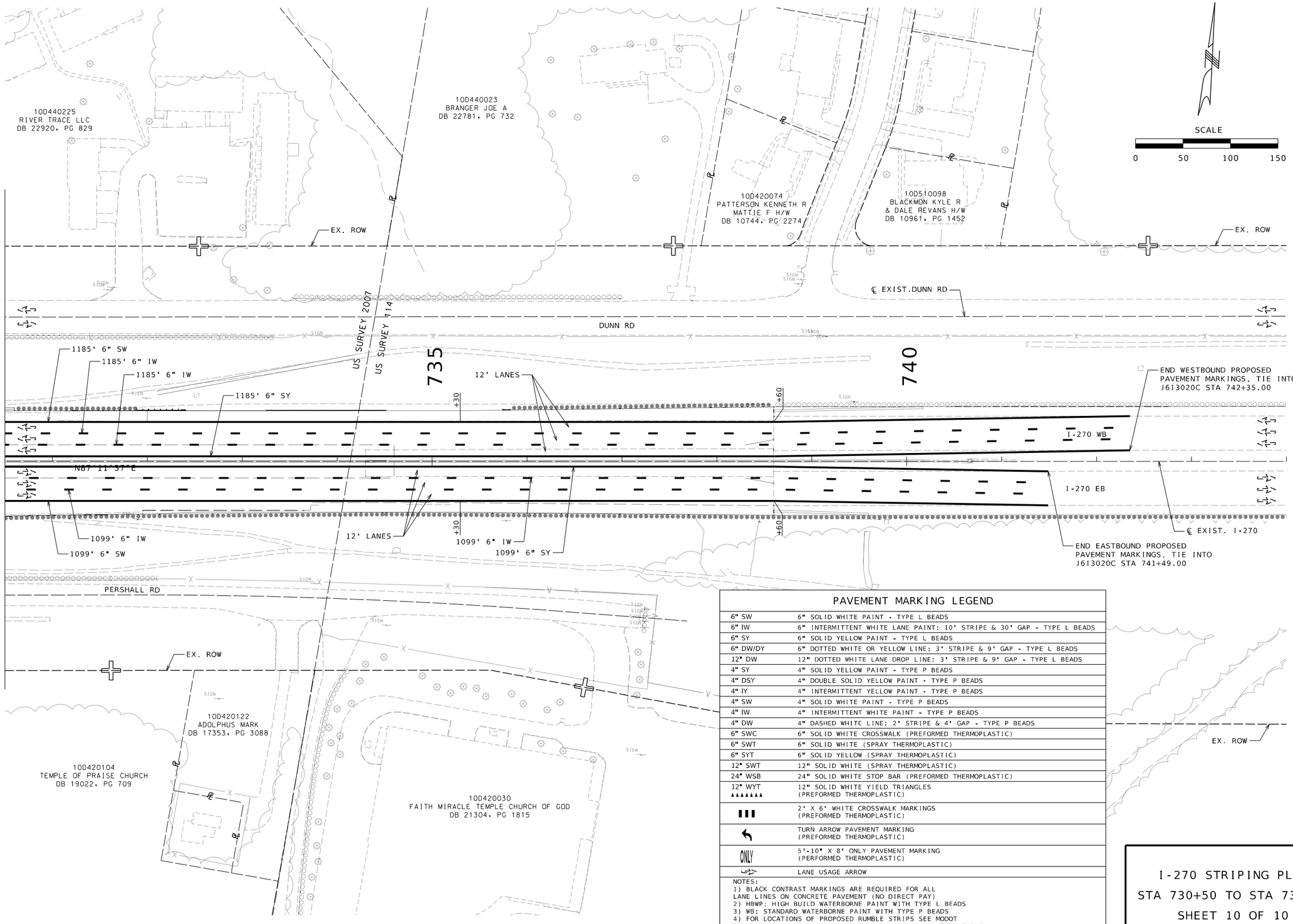

PAVEMENT MARKING LEGEND

6" SW	6" SOLID WHITE PAINT - TYPE L BEADS
6" IW	6" INTERMITTENT WHITE LANE PAINT: 10' STRIPE & 30' GAP - TYPE L BEADS
6" SY	6" SOLID YELLOW PAINT - TYPE L BEADS
6" DW/DY	6" DOTTED WHITE OR YELLOW LINE: 3' STRIPE & 9' GAP - TYPE L BEADS
12" DW	12" DOTTED WHITE LANE DROP LINE: 3' STRIPE & 9' GAP - TYPE L BEADS
4" SY	4" SOLID YELLOW PAINT - TYPE P BEADS
4" DSY	4" DOUBLE SOLID YELLOW PAINT - TYPE P BEADS
4" IY	4" INTERMITTENT YELLOW PAINT - TYPE P BEADS
4" SW	4" SOLID WHITE PAINT - TYPE P BEADS
4" IW	4" INTERMITTENT WHITE PAINT - TYPE P BEADS
4" DW	4" DASHED WHITE LINE: 2' STRIPE & 4' GAP - TYPE P BEADS
6" SWC	6" SOLID WHITE CROSSWALK (PREFORMED THERMOPLASTIC)
6" SWT	6" SOLID WHITE (SPRAY THERMOPLASTIC)
6" SYT	6" SOLID YELLOW (SPRAY THERMOPLASTIC)
12" SWT	12" SOLID WHITE (SPRAY THERMOPLASTIC)
24" WSB	24" SOLID WHITE STOP BAR (PREFORMED THERMOPLASTIC)
12" WYT ▲▲▲▲▲▲▲	12" SOLID WHITE YIELD TRIANGLES (PREFORMED THERMOPLASTIC)
▮▮▮	2' X 6' WHITE CROSSWALK MARKINGS (PREFORMED THERMOPLASTIC)
↰	TURN ARROW PAVEMENT MARKING (PREFORMED THERMOPLASTIC)
ONLY	5'-10" X 8' ONLY PAVEMENT MARKING (PERFORMED THERMOPLASTIC)
⇄	LANE USAGE ARROW

NOTES:
1) BLACK CONTRAST MARKINGS ARE REQUIRED FOR ALL LANE LINES ON CONCRETE PAVEMENT (NO DIRECT PAY)
2) HBWP: HIGH BUILD WATERBORNE PAINT WITH TYPE L BEADS
3) WB: STANDARD WATERBORNE PAINT WITH TYPE P BEADS
4) FOR LOCATIONS OF PROPOSED RUMBLE STRIPS SEE MODOT STANDARD PLAN 626.00H AND STATION RANGES ON QUANTITY TABLE

I-270 STRIPING PLAN
STA 730+50 TO STA 739+60
SHEET 10 OF 10

STATE OF MISSOURI
EUGENE LOUIS KUEKER JR.
NUMBER PE-2010009912
PROFESSIONAL ENGINEER

THIS SHEET HAS BEEN SIGNED, SEALED, AND DATED ELECTRONICALLY.

IF A SEAL IS PRESENT ON THIS SHEET IT HAS BEEN ELECTRONICALLY SEALED AND DATED.

DATE PREPARED: 3/25/2026
ROUTE: I-270 | STATE: MO
DISTRICT: SL | SHEET NO.: 36
COUNTY: ST. LOUIS
JOB NO.: J6I3580B
CONTRACT ID.:
PROJECT NO.:
BRIDGE NO.:

DESCRIPTION	DATE

MISSOURI HIGHWAYS AND TRANSPORTATION COMMISSION
105 WEST CAPITOL
JEFFERSON CITY, MO 65102
1-888-ASK-MODOT (1-888-275-6636)

HDR Engineering, Inc.
1001 Highlands Plaza Drive
Suite 200
St. Louis, MO 63110-1337
314-425-8300
Certificate of Authority: 000856

MISSOURI HIGHWAYS AND TRANSPORTATION COMMISSION
FINAL PLANS FOR PROPOSED
INTERSTATE 270
ST. LOUIS COUNTY



KEY MAP
LOCATION OF ST. LOUIS COUNTY

DESIGN DESIGNATION

I-270 EASTBOUND
A.A.D.T. - 2022 = 38,700
A.A.D.T. - 2046 = 42,800
D.H.V. = 5%
T = 18%
V = 60 M.P.H.
FUNCTIONAL CLASSIFICATION - INTERSTATE HIGHWAY

I-270 WESTBOUND
A.A.D.T. - 2022 = 38,200
A.A.D.T. - 2046 = 42,300
D.H.V. = 3%
T = 18%
V = 60 M.P.H.
FUNCTIONAL CLASSIFICATION - INTERSTATE HIGHWAY

MO 367
A.A.D.T. - 2022 = 17,100
A.A.D.T. - 2046 = 18,810
D.H.V. = 7% (NB & SB)
T = 1% (NB & SB)
V = 45 M.P.H.
FUNCTIONAL CLASSIFICATION - FREEWAY

BELLEFONTAINE ROAD
A.A.D.T. - 2022 = 13,200
A.A.D.T. - 2046 = 14,520
D.H.V. = 23% (NB), 8% (SB)
T = 1.7% (NB & SB)
V = 35 M.P.H.
FUNCTIONAL CLASSIFICATION - MINOR ARTERIAL

NEW RIGHT-OF-WAY WILL BE ACQUIRED ON THIS PROJECT.

CONVENTIONAL SYMBOLS
(USED IN PLANS)

	EXISTING	NEW
BUILDINGS AND STRUCTURES		
GUARD RAIL		
GUARD CABLE		
CONCRETE RIGHT-OF-WAY MARKER		
STEEL RIGHT-OF-WAY MARKER		
LOCATION SURVEY MARKER		
UTILITIES		
FIBER OPTICS	-FO-	-FO-
CABLE TV	-CATV-	-CATV-
OVERHEAD TELEPHONE	-OT-	-OT-
UNDERGROUND TELEPHONE	-UT-	-UT-
OVERHEAD POWER	-OE-	-OE-
UNDERGROUND POWER	-UE-	-UE-
SANITARY SEWER	-S-	-S-
STORM SEWER	-SS-	-SS-
GAS	-G-	-G-
WATER	-W-	-W-
ITS EQUIPMENT		
MANHOLE	SAN	
FIRE HYDRANT	HYD	
WATER VALVE	WV	
WATER METER	WM	
DROP INLET	D	
DITCH BLOCK		
GROUND MOUNTED SIGN	SIGN	
LIGHT POLE		
H-FRAME POWER POLE		
TELEPHONE PEDESTAL	PED	
FENCE		
CHAIN LINK	-V-	
WOVEN WIRE	-X-	
GATE POST		
BENCHMARK	BM	

NOTE: DASHED OR OPEN SYMBOLS INDICATE EXISTING FEATURES

R6E | R7E

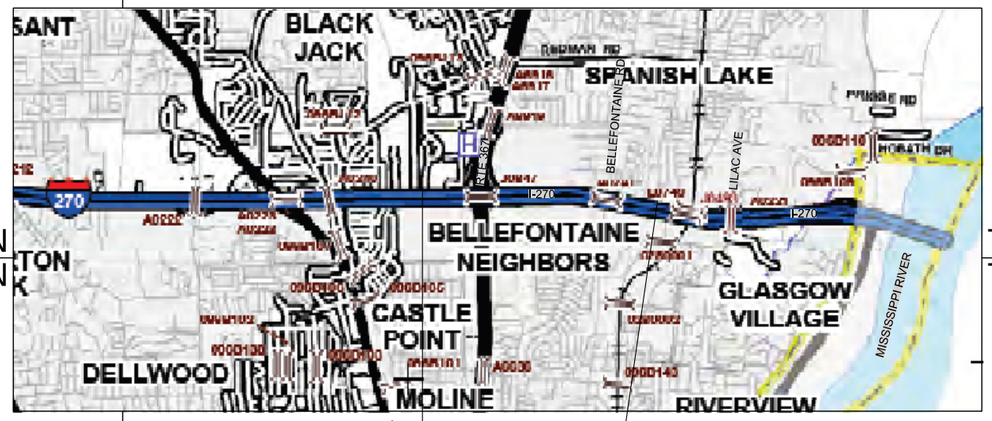

T47N
T46N

R6E | R7E

BEGIN PROJECT
EX I-270 LOG MILE 31.787
STA 593+96.00

END PROJECT
EX I-270 LOG MILE 33.555
STA 685+98.00

GRADING, DRAINAGE, PAVEMENT, SIGNING, SIGNALS, BRIDGE, PAVEMENT MARKINGS, LIGHTING
TOTAL LENGTH = 9,202.00 FT

NOT TO SCALE

THE EXISTENCE AND APPROXIMATE LOCATION OF UTILITY FACILITIES KNOWN TO EXIST, AS SHOWN ON THE PLANS, ARE BASED ON THE BEST INFORMATION AVAILABLE TO THE COMMISSION AT THIS TIME. THIS INFORMATION IS PROVIDED BY THE COMMISSION "AS-IS" AND THE COMMISSION EXPRESSLY DISCLAIMS ANY REPRESENTATION OR WARRANTY AS TO THE COMPLETENESS, ACCURACY, OR SUITABILITY OF THE INFORMATION FOR ANY USE. RELIANCE UPON THIS INFORMATION IS DONE AT THE RISK AND PERIL OF THE USER, AND THE COMMISSION SHALL NOT BE LIABLE FOR ANY DAMAGES THAT MAY ARISE FROM ANY ERROR IN THE INFORMATION. IT IS, THEREFORE, THE RESPONSIBILITY OF THE CONTRACTOR TO VERIFY THE EXISTENCE, LOCATION AND STATUS OF ANY FACILITY. SUCH VERIFICATION INCLUDES DIRECT CONTACT WITH THE LISTED UTILITIES.

MSD# 25MSD-00035
BASE MAPS 10E & 10F

INDEX OF SHEETS

DESCRIPTION	SHEET NUMBER
TITLE SHEET	1
TYPICAL SECTIONS (TS) (10 SHEETS)	2
QUANTITIES (QU) (19 SHEETS)	3
ALIGNMENT DATA (AL) (4 SHEETS)	4 - 7
PLAN (PL) (10 SHEETS)	8 - 17
PROFILE (PF) (5 SHEETS)	18 - 22
REFERENCE POINTS (RP) (1 SHEET)	23
COORDINATE POINTS (CP) (1 SHEET)	24
RIGHT OF WAY DETAILS (RW) (1 SHEET)	25
SPECIAL SHEETS (SS) (7 SHEETS)	26 - 32
TRAFFIC CONTROL (TC) (60 SHEETS)	33 - 92
EROSION CONTROL (EC) (27 SHEETS)	93 - 119
DRAINAGE PLAN (DP) (11 SHEETS)	120 - 130
CULVERT SECTIONS (CS) (2 SHEETS)	131 - 132
PAVEMENT MARKINGS (PM) (10 SHEETS)	133 - 142
ITS PLAN (IT) (9 SHEETS)	143 - 151
LIGHTING PLAN (LT) (4 SHEETS)	152 - 155
SIGNING PLAN (SN) (11 SHEETS)	156 - 166
SIGNAL PLAN (SG) (14 SHEETS)	167 - 180
BRIDGE DRAWINGS (B)	
BRIDGE A9489 (EB I-270 OVER MO 367)	1 - 40
BRIDGE A9490 (WB I-270 OVER MO 367)	1 - 43
BRIDGE A9493 (EB I-270 OVER BELLEFONTAINE RD)	1 - 51
BRIDGE A9494 (WB I-270 OVER BELLEFONTAINE RD)	1 - 52
MSE WALL A9491 (10 SHEETS)	1 - 10
MSE WALL A9492 (10 SHEETS)	1 - 10
CROSS SECTIONS (XS)	
I-270 EASTBOUND	XS-2 - XS-58
I-270 WESTBOUND	XS-59 - XS-122
MO-367	XS-123 - XS-131
BELLEFONTAINE RD	XS-132 - XS-138
RAMP 8-D	XS-139 - XS-148

LENGTH OF PROJECT

BEGINNING OF PROJECT	STA 593+96.00
END OF PROJECT	STA 685+98.00
APPARENT LENGTH	9,202.00 FEET
EQUATIONS AND EXCEPTIONS:	
STA 596+70.00 R1 ℄ EXIST. I-270 BK = STA 596+65.33 R2 ℄ EXIST. I-270 AH	- 4.67 FEET
STA 642+17.06 R2 ℄ EXIST. I-270 BK = STA 640+97.00 R3 ℄ EXIST. I-270 AH	- 120.06 FEET
TOTAL CORRECTIONS	- 124.73 FEET
NET LENGTH OF PROJECT	9,077.27 FEET
STATE LENGTH	1.719 MILES
FOR INFORMATION ONLY ESTIMATED DISTURBED ACRES	5.0 ACRES

STATE OF MISSOURI
EUGENE LOUIS KUEKER JR.
NUMBER PE-2011000912
PROFESSIONAL ENGINEER

THIS SHEET HAS BEEN SIGNED, SEALED, AND DATED ELECTRONICALLY.

DATE PREPARED
3/25/2026

ROUTE	STATE
I-270	MO
DISTRICT	SHEET NO.
SL	1

COUNTY
ST. LOUIS

JOB NO.
JSL0021

CONTRACT ID.

PROJECT NO.

BRIDGE NO.

DATE	DESCRIPTION

IF A SEAL IS PRESENT ON THIS SHEET IT HAS BEEN ELECTRONICALLY SEALED AND DATED.

MISSOURI HIGHWAYS AND TRANSPORTATION COMMISSION
105 WEST CAPITOL
JEFFERSON CITY, MO 65102
1-888-ASK-MODOT (1-888-275-6636)

HDR Engineering, Inc.
1001 Highlands Plaza Drive
Suite 200
St. Louis, MO 63110-1337
314-425-8300
Certificate of Authority: 000856

* EX. GUARDRAIL
FROM STA 604+44.30 TO STA 605+83.50,
FROM STA 607+48.92 TO STA 609+16.04,
FROM STA 611+20.12 TO STA 614+45.87,
FROM STA 615+80.55 TO STA 617+81.69

** EX. GUARDRAIL
FROM STA 596+51.18 TO STA 598+34.00,
FROM STA 607+28.83 TO STA 609+17.46,
FROM STA 611+17.37 TO STA 614+40.76

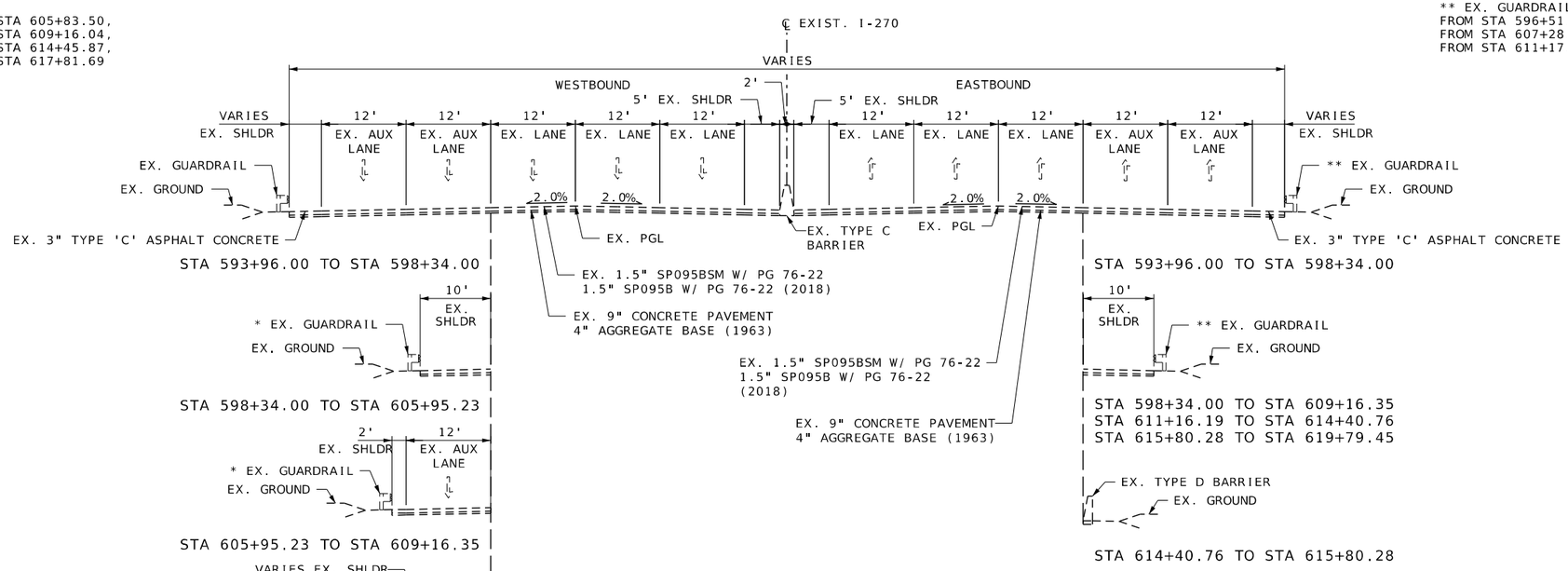

I-270 TANGENT SECTION - EXISTING
STA 593+96.00 TO STA 609+16.35
STA 611+16.19 TO STA 619+79.45 (@ RAMP 8F)

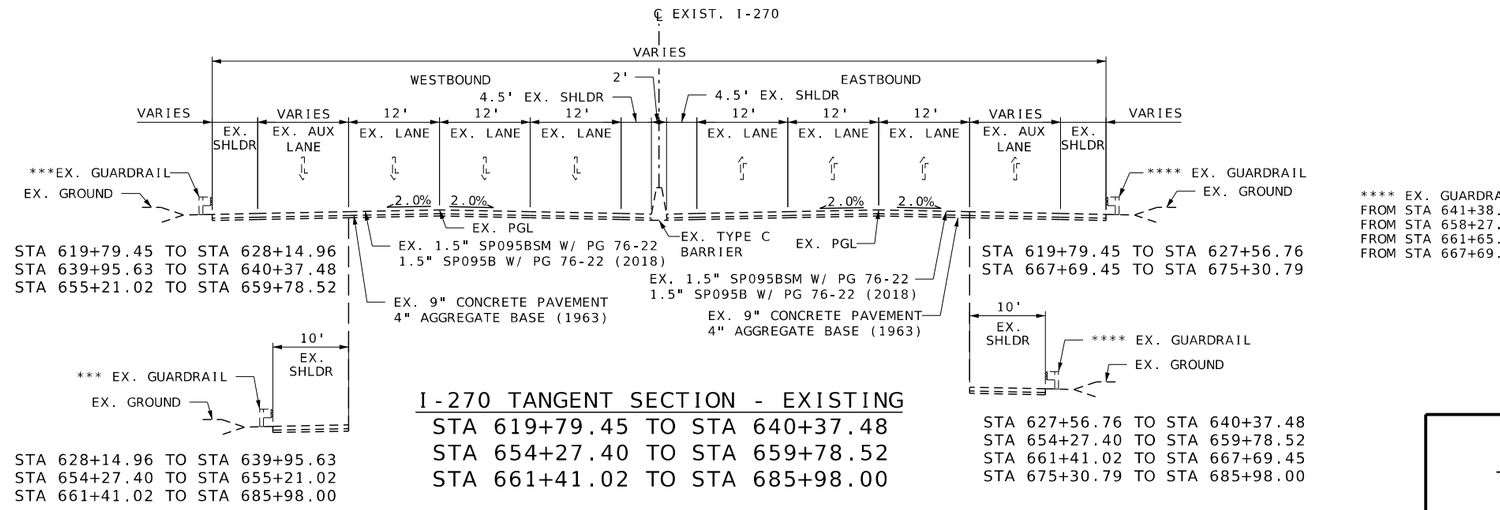

*** EX. GUARDRAIL
FROM STA 620+95.91 TO STA 622+02.33,
FROM STA 632+41.72 TO STA 633+88.82,
FROM STA 661+45.45 TO STA 676+14.80,
FROM STA 679+04.00 TO STA 681+42.47

**** EX. GUARDRAIL
FROM STA 641+38.68 R2 TO STA 641+26.62 R3,
FROM STA 658+27.74 TO STA 659+78.52,
FROM STA 661+65.43 TO STA 664+29.46,
FROM STA 667+69.45 TO STA 680+20.47

I-270 TANGENT SECTION - EXISTING
STA 619+79.45 TO STA 640+37.48
STA 654+27.40 TO STA 659+78.52
STA 661+41.02 TO STA 685+98.00

N.T.S. - FOLLOW DIMENSIONS

TYPICAL SECTIONS
SHEET 1 OF 10

STATE OF MISSOURI
EUGENE LOUIS KUEVER JR.
NUMBER PE-2010009912
PROFESSIONAL ENGINEER
THIS SHEET HAS BEEN SIGNED, SEALED, AND DATED ELECTRONICALLY.

IF A SEAL IS PRESENT ON THIS SHEET IT HAS BEEN ELECTRONICALLY SEALED AND DATED.

DATE PREPARED 3/25/2026
ROUTE I-270 | STATE MO
DISTRICT SL | SHEET NO. 2
COUNTY ST. LOUIS
JOB NO. JSL0021
CONTRACT ID.
PROJECT NO.
BRIDGE NO.

DESCRIPTION	DATE

MISSOURI HIGHWAYS AND TRANSPORTATION COMMISSION
105 WEST CAPITOL
JEFFERSON CITY, MO 65102
1-888-ASK-MODOT (1-888-275-6636)
HDR Engineering, Inc.
1001 Highlands Plaza Drive
Suite 200
St. Louis, MO 63110-1337
314-425-8300
Certificate of Authority: 000856

* EX. GUARDRAIL
FROM STA 650+18.64 TO STA 651+27.96

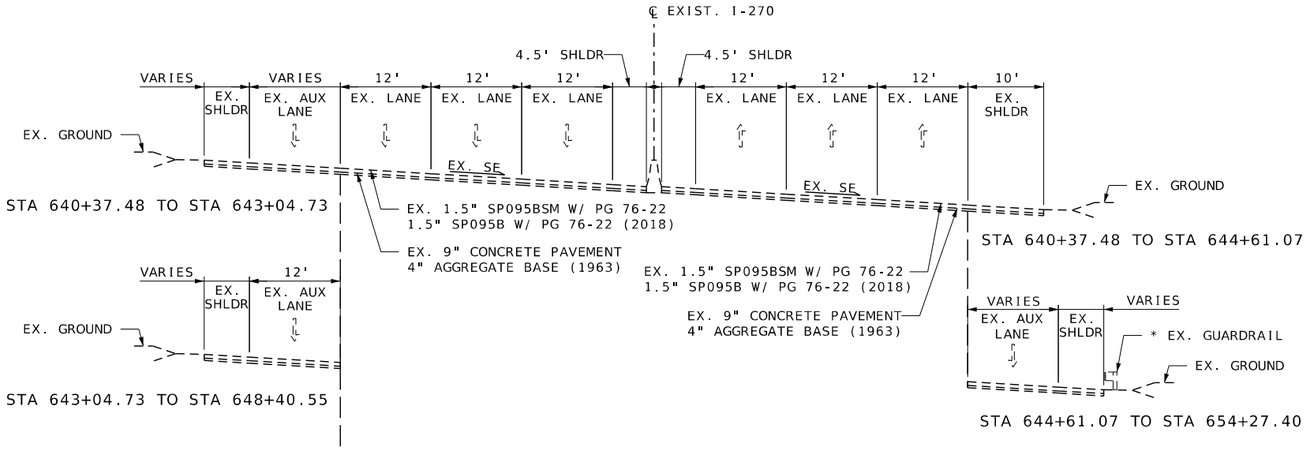

I-270 SUPERELEVATION SECTION - EXISTING
STA 640+37.48 TO STA 654+27.40

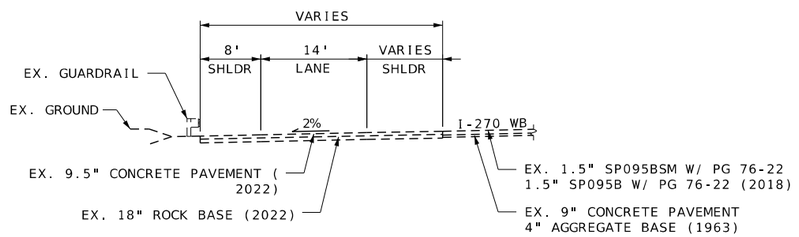

I-270 WB RAMP TO DUNN RD - EXISTING
STA 655+85.00 TO STA 659+64.98

N.T.S. - FOLLOW DIMENSIONS

TYPICAL SECTIONS
SHEET 2 OF 10

STATE OF MISSOURI
EUGENE LOUIS KLIEVER JR.
NUMBER PE-2010020912
PROFESSIONAL ENGINEER
THIS SHEET HAS BEEN SIGNED, SEALED, AND DATED ELECTRONICALLY.

DATE PREPARED 3/25/2026
ROUTE I-270 | STATE MO
DISTRICT SL | SHEET NO. 2
COUNTY ST. LOUIS
JOB NO. JSL0021
CONTRACT ID.
PROJECT NO.
BRIDGE NO.

DESCRIPTION | DATE

IF A SEAL IS PRESENT ON THIS SHEET IT HAS BEEN ELECTRONICALLY SEALED AND DATED.

MISSOURI HIGHWAYS AND TRANSPORTATION COMMISSION
105 WEST CAPITOL
JEFFERSON CITY, MO 65102
1-888-ASK-MODOT (1-888-275-6636)

HDR Engineering, Inc.
1001 Highlands Plaza Drive
Suite 200
St. Louis, MO 63110-1337
314-425-8300
Certificate of Authority: 000856

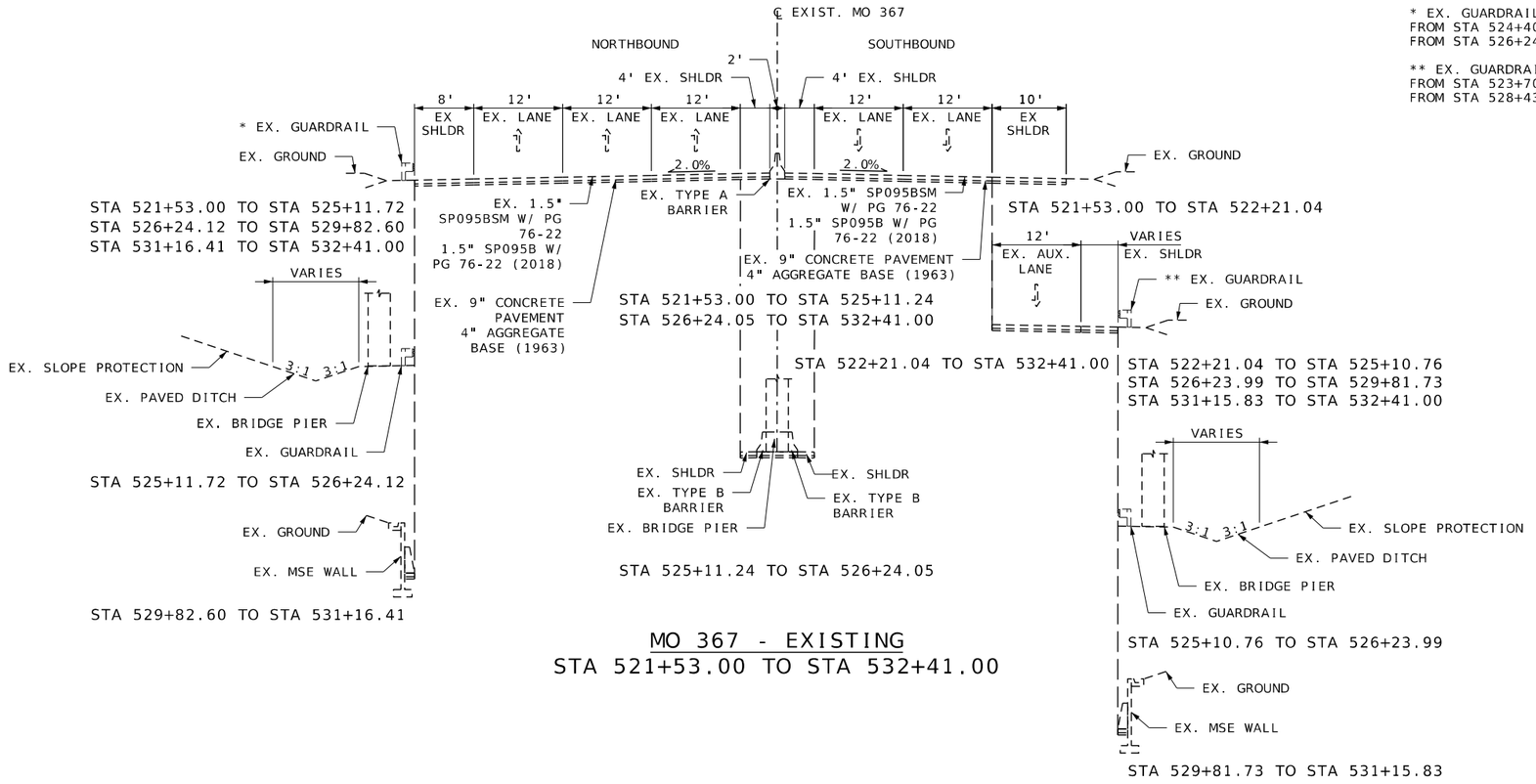

MO 367 - EXISTING
STA 521+53.00 TO STA 532+41.00

* EX. GUARDRAIL
FROM STA 524+40.24 TO STA 525+11.72,
FROM STA 526+24.12 TO STA 527+18.89

** EX. GUARDRAIL
FROM STA 523+70.02 TO STA 525+10.76,
FROM STA 528+43.10 TO STA 529+81.73

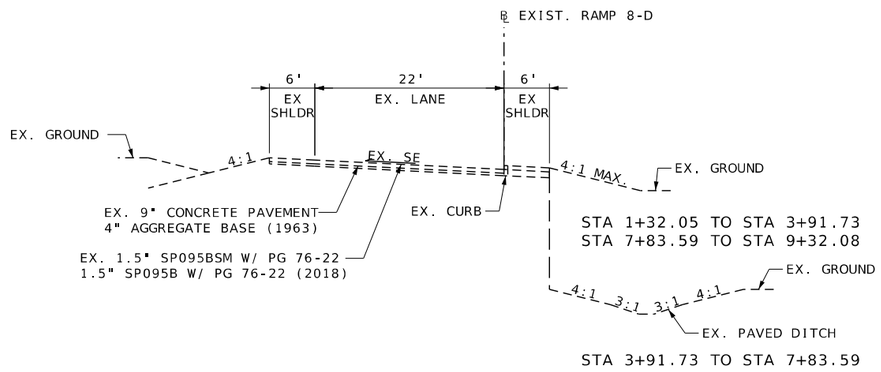

RAMP 8-D - EXISTING
STA 1+32.05 TO STA 9+32.08

N.T.S. - FOLLOW DIMENSIONS

TYPICAL SECTIONS
SHEET 3 OF 10

STATE OF MISSOURI
EUGENE LOUIS KUEKER JR.
NUMBER PE-2011000912
PROFESSIONAL ENGINEER
THIS SHEET HAS BEEN SIGNED, SEALED, AND DATED ELECTRONICALLY.

IF A SEAL IS PRESENT ON THIS SHEET IT HAS BEEN ELECTRONICALLY SEALED AND DATED.

DATE PREPARED 3/25/2026
ROUTE I-270 | STATE MO
DISTRICT SL | SHEET NO. 2
COUNTY ST. LOUIS
JOB NO. JSL0021
CONTRACT ID.
PROJECT NO.
BRIDGE NO.

DESCRIPTION | DATE

MISSOURI HIGHWAYS AND TRANSPORTATION COMMISSION
105 WEST CAPITOL
JEFFERSON CITY, MO 65102
1-888-ASK-MODOT (1-888-275-6636)

HDR Engineering, Inc.
1001 Highlands Plaza Drive
Suite 200
St. Louis, MO 63110-1337
314-425-8300
Certificate of Authority: 000856

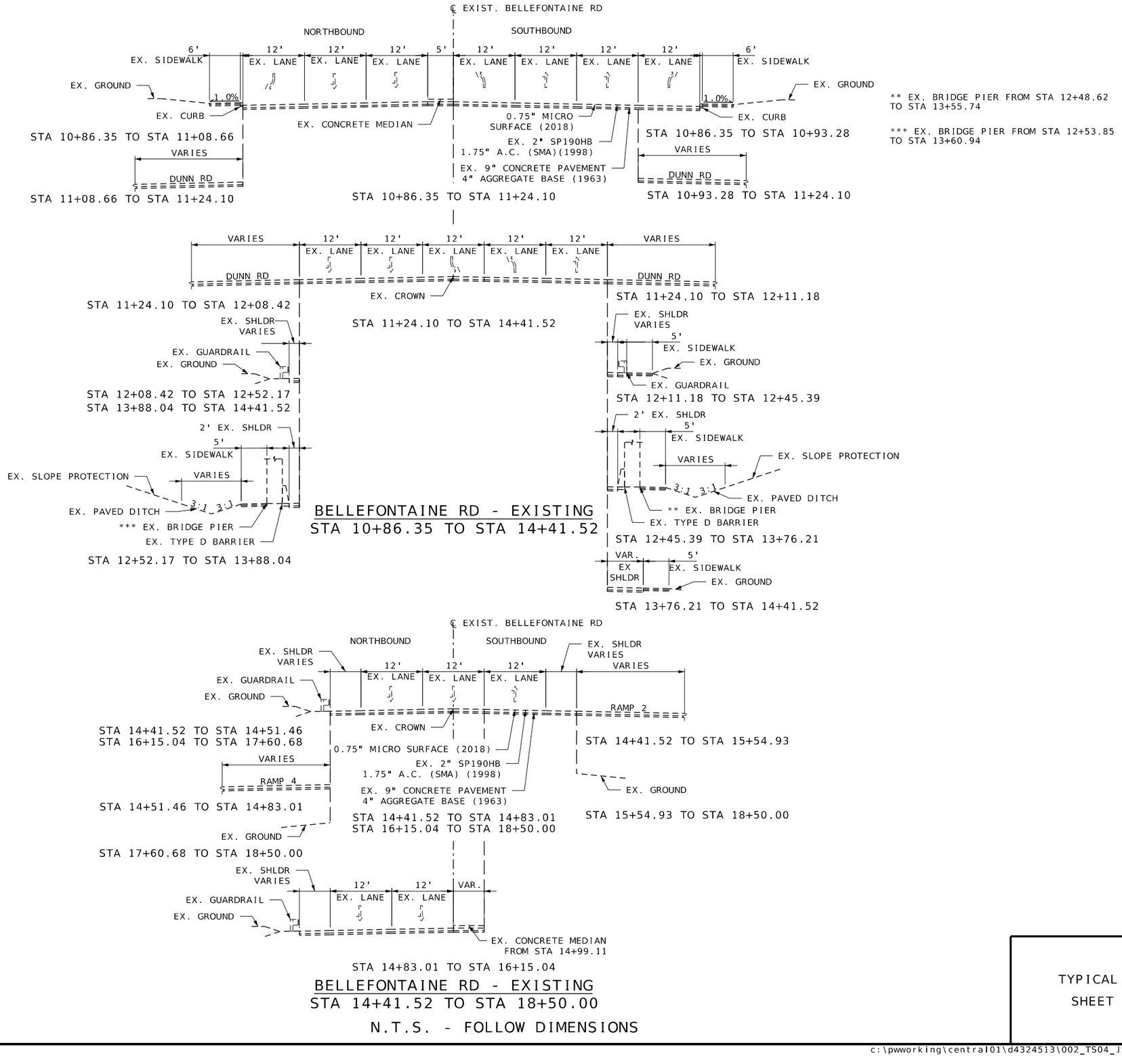

STATE OF MISSOURI
EUGENE LOUIS KUEKER JR.
NUMBER PE-2010000912
PROFESSIONAL ENGINEER

THIS SHEET HAS BEEN SIGNED, SEALED, AND DATED ELECTRONICALLY.

IF A SEAL IS PRESENT ON THIS SHEET IT HAS BEEN ELECTRONICALLY SEALED AND DATED.

DATE PREPARED: 3/25/2026

ROUTE	STATE
I-270	MO
DISTRICT	SHEET NO.
SL	2

COUNTY: ST. LOUIS

JOB NO.: JSL0021

CONTRACT ID.:

PROJECT NO.:

BRIDGE NO.:

DESCRIPTION	DATE

MISSOURI HIGHWAYS AND TRANSPORTATION COMMISSION

105 WEST CAPITOL
JEFFERSON CITY, MO 65102
1-888-ASK-MODOT (1-888-275-6636)

HDR Engineering, Inc.
1001 Highlands Plaza Drive
Suite 200
St. Louis, MO 63110-1337
314-425-8300
Certificate of Authority: 000856

TYPICAL SECTIONS
SHEET 4 OF 10

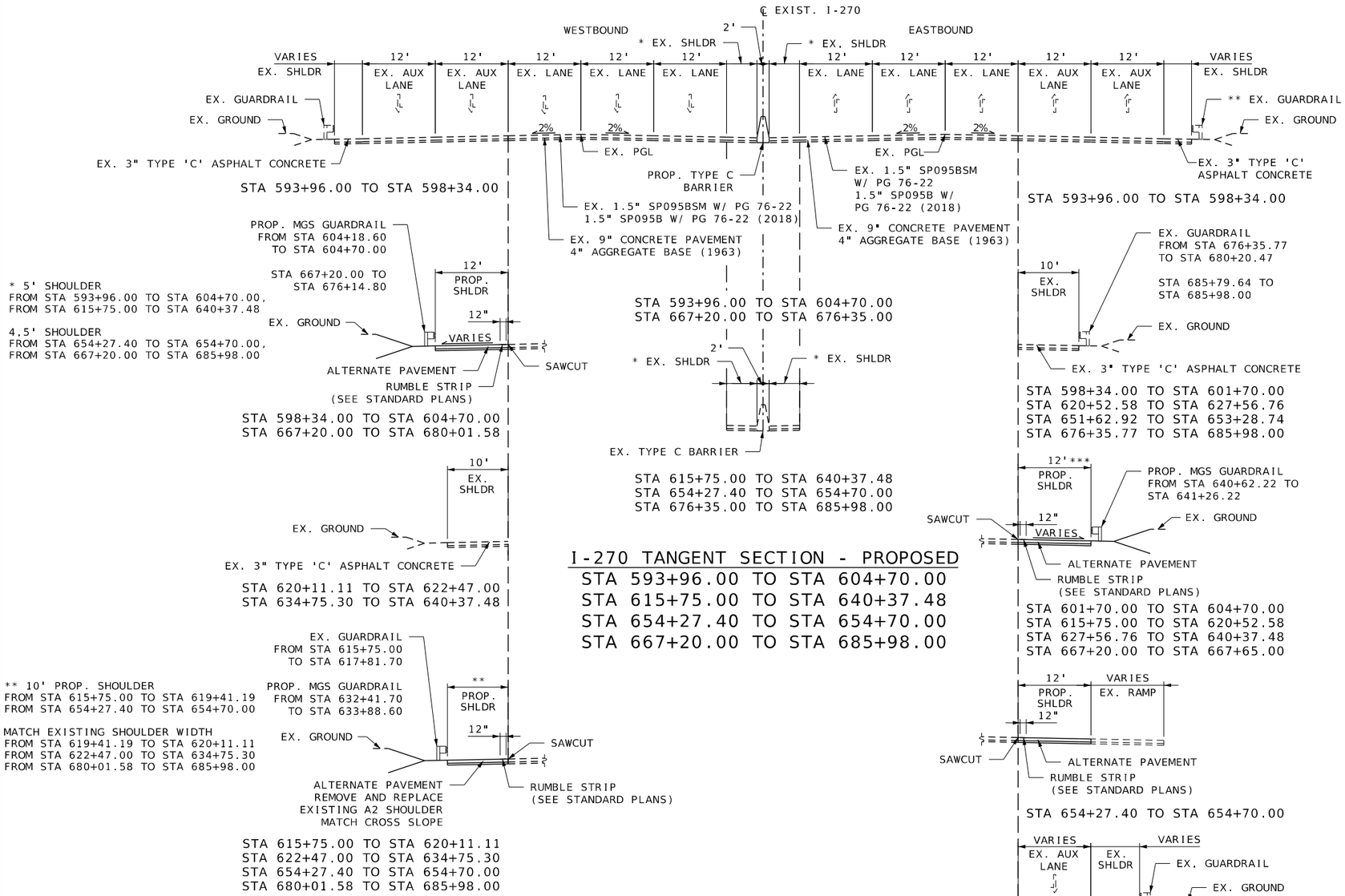

I-270 TANGENT SECTION - PROPOSED

STA 593+96.00 TO STA 604+70.00
STA 615+75.00 TO STA 640+37.48
STA 654+27.40 TO STA 654+70.00
STA 667+20.00 TO STA 685+98.00

REHAB CONSTRUCTION

I-270:
MILL/FILL 2" SP125BSM w/ PG 76-22

BELLEFONTAINE RD, RAMP 8-D MAINLINE:
MILL/FILL 2" SP125CLP w/ PG 70-22

BELLEFONTAINE RD, RAMP 8-D SHOULDERS:
MILL/FILL 2" BP-1 w/ PG 64-22

ASPHALT APPLICATION RATES:

SP125BSM w/ PG 76-22:	1.97 TONS PER CY
SP125CLP w/ PG 70-22:	1.97 TONS PER CY
BP-1 w/ PG 64-22:	1.99 TONS PER CY
TACK COAT:	0.13 GAL PER SY

N.T.S. - FOLLOW DIMENSIONS

ALTERNATE PAVEMENT DESIGN
I-270 MAINLINE

ALTERNATE I	ALTERNATE J
15.5" HMA 2" SP125BSM w/ PG 76-22 OVER 2" SP125B w/ PG 76-22 OVER 11.5" SP190C w/ PG 64-22 12" ROCK BASE	11" PCCP WIDEN SLAB 15 FT. JOINT SPACING, 1 ½ DOWELS 12" ROCK BASE

ALTERNATIVE I WAS USED IN THE COMPUTATION OF EARTHWORK FOR THIS PROJECT.

ALTERNATE PAVEMENT DESIGN
I-270 SHOULDERS

ALTERNATE K	ALTERNATE L
15.5" HMA 2" SP125BSM w/ PG 76-22 OVER 2" SP125B w/ PG 76-22 OVER 11.5" SP190C w/ PG 64-22 12" ROCK BASE	11" PCCP WIDEN SLAB 15 FT. JOINT SPACING, 1 ½ DOWELS 12" ROCK BASE

ALTERNATIVE K WAS USED IN THE COMPUTATION OF EARTHWORK FOR THIS PROJECT.

ALTERNATE PAVEMENT DESIGN
BELLEFONTAINE RD

ALTERNATE M	ALTERNATE N
9.5" HMA 2" SP125CLP w/ PG 70-22 2" SP125C w/ PG 70-22 OVER 5.5" SP190C w/ PG 64-22 6" TYPE 5 AGGREGATE BASE	9.5" PCCP 15 FT. JOINT SPACING, 1 ¼ DOWELS 6" TYPE 5 AGGREGATE BASE

ALTERNATIVE M WAS USED IN THE COMPUTATION OF EARTHWORK FOR THIS PROJECT.

ALTERNATE PAVEMENT DESIGN
MO 367 & RAMP 8D (I-270/MO 367)

ALTERNATE O	ALTERNATE P
10.5" HMA 2" SP125CLP w/ PG 70-22 OVER 2" SP125C w/ PG 70-22 OVER 6.5" SP190C w/ PG 64-22 6" TYPE 5 AGGREGATE BASE	10.5" PCCP 15 FT. JOINT SPACING, 1 ½ DOWELS 6" TYPE 5 AGGREGATE BASE

ALTERNATIVE O WAS USED IN THE COMPUTATION OF EARTHWORK FOR THIS PROJECT.

*** MATCH EXISTING SHOULDER WIDTH
FROM STA 601+70.00 TO STA 603+89.90

TYPICAL SECTIONS
SHEET 5 OF 10

HDR Engineering, Inc.
1001 Highlands Plaza Drive
Suite 200
St. Louis, MO 63110-1337
314-425-8300
Certificate of Authority: 000856

STATE OF MISSOURI
EUGENE LOUIS KUEKER JR.
NUMBER PE-2010009912
PROFESSIONAL ENGINEER
THIS SHEET HAS BEEN SIGNED, SEALED, AND DATED ELECTRONICALLY.

DATE PREPARED 3/25/2026
ROUTE I-270 | STATE MO
DISTRICT SL | SHEET NO. 2
COUNTY ST. LOUIS
JOB NO. JSL0021
CONTRACT ID.
PROJECT NO.
BRIDGE NO.

DESCRIPTION | DATE

MISSOURI HIGHWAYS AND TRANSPORTATION COMMISSION
105 WEST CAPITOL
JEFFERSON CITY, MO 65102
1-888-ASK-MODOT (1-888-275-6636)

IF A SEAL IS PRESENT ON THIS SHEET IT HAS BEEN ELECTRONICALLY SEALED AND DATED.

* I-270 TRANSITION CROWN
FROM 30'-0" LT/RT AT 604+70.00 TO 18'-0" LT/RT AT 605+70.00,
FROM 18'-0" LT/RT AT 614+75.00 TO 30'-0" LT/RT AT 615+75.00,
FROM 29'-6" LT/RT AT 654+70.00 TO 17'-6" LT/RT AT 655+70.00,
FROM 17'-6" LT/RT AT 666+20.00 TO 29'-6" LT/RT AT 667+20.00

** 5' SHOULDER
FROM STA 604+70.00 TO STA 605+70.00
FROM STA 614+75.00 TO STA 615+75.00

4.5' SHOULDER
FROM STA 654+70.00 TO STA 655+70.00
FROM STA 666+20.00 TO STA 667+20.00

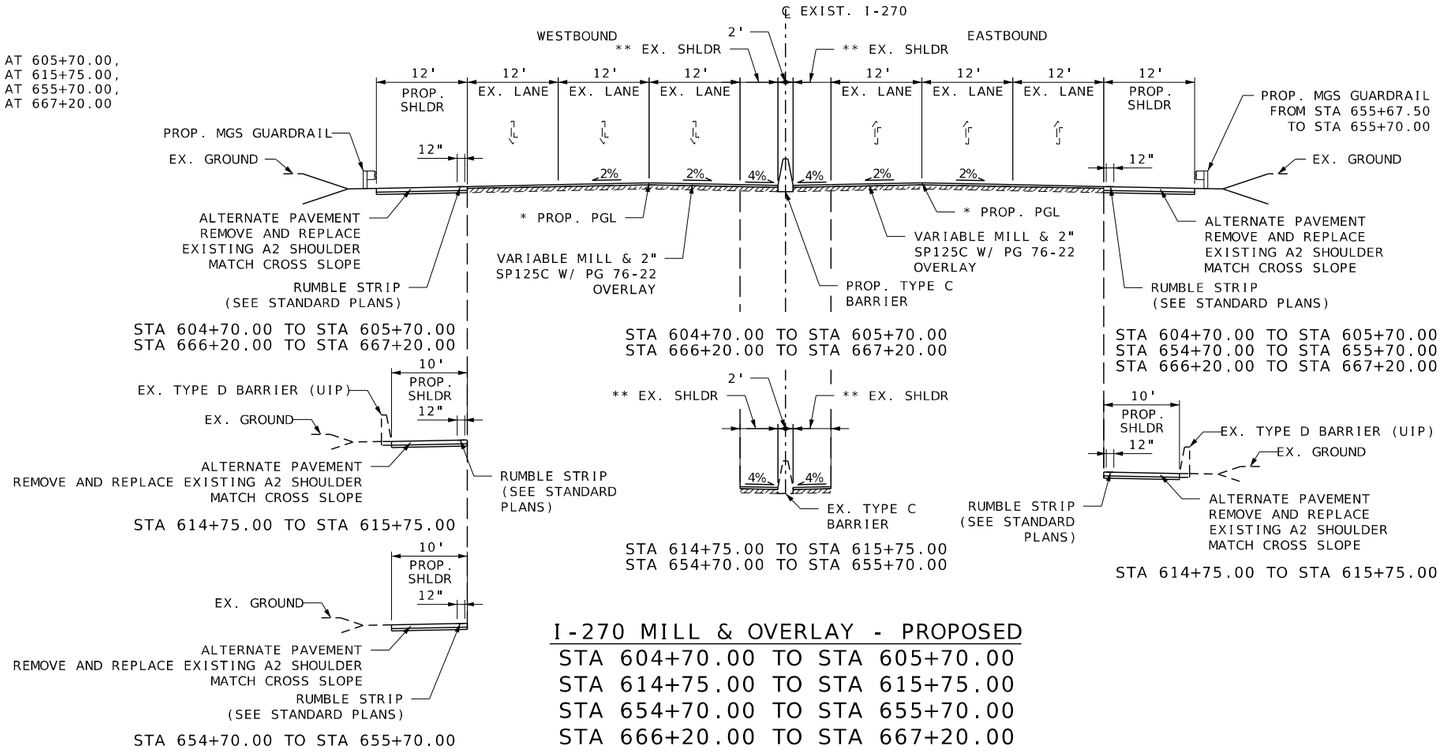

*** 5' SHOULDER AND TYPE C BARRIER
FROM STA 605+70.00 TO STA 608+30.46,
FROM STA 612+21.03 TO STA 614+75.00

TRANSITION FROM 5' SHOULDER TO 4.5' SHOULDER AND TRANSITION FROM TYPE C BARRIER TO MODIFIED TYPE C BARRIER
FROM STA 608+30.46 TO STA 608+80.46

4.5' SHOULDER AND MODIFIED TYPE C BARRIER
FROM STA 608+80.46 TO STA 609+39.02,
FROM STA 610+88.52 TO STA 611+71.03

TRANSITION FROM 4.5' SHOULDER TO 5' SHOULDER AND TRANSITION FROM MODIFIED TYPE C BARRIER TO TYPE C BARRIER
FROM STA 611+71.03 TO STA 612+21.03

4.5' SHOULDER AND TYPE C BARRIER
FROM STA 655+70.00 TO STA 658+36.90,
FROM STA 662+81.88 TO STA 666+20.00

TRANSITION FROM 4.5' SHOULDER TO 4' SHOULDER AND TRANSITION FROM TYPE C BARRIER TO MODIFIED TYPE C BARRIER
FROM STA 658+36.90 TO STA 658+86.90

4' SHOULDER AND MODIFIED TYPE C BARRIER
FROM STA 658+86.90 TO STA 659+73.15,
FROM STA 661+64.16 TO STA 662+31.88

TRANSITION FROM 4' SHOULDER TO 4.5' SHOULDER AND TRANSITION FROM MODIFIED TYPE C BARRIER TO TYPE C BARRIER
FROM STA 662+31.88 TO STA 662+81.88

**** WESTBOUND PROP. MGS GUARDRAIL
FROM STA 605+70.00 TO STA 605+83.50,
FROM STA 607+52.92 TO STA 609+19.52,
FROM STA 610+99.65 TO STA 614+45.87,
FROM STA 655+85.00 TO STA 659+49.27,
FROM STA 661+79.28 TO STA 666+20.00

PROP. BRIDGE BARRIER
FROM STA 609+19.52 TO STA 609+39.02,
FROM STA 659+49.27 TO STA 659+73.15,
FROM STA 661+64.16 TO STA 661+79.28

***** EASTBOUND PROP. MGS GUARDRAIL
FROM STA 607+28.79 TO STA 609+19.52,
FROM STA 611+08.02 TO STA 614+40.76,
FROM STA 655+67.50 TO STA 659+58.03,
FROM STA 661+88.03 TO STA 664+31.09

PROP. BRIDGE BARRIER
FROM STA 609+19.52 TO STA 609+39.02,
FROM STA 659+58.03 TO STA 659+73.15,
FROM STA 661+64.16 TO STA 661+88.03

****** PROP. AUX LANE VARIES 12' TO 0'
FROM STA 612+46.23 TO STA 614+45.87

I-270 MILL & OVERLAY - PROPOSED

STA 604+70.00 TO STA 605+70.00
STA 614+75.00 TO STA 615+75.00
STA 654+70.00 TO STA 655+70.00
STA 666+20.00 TO STA 667+20.00

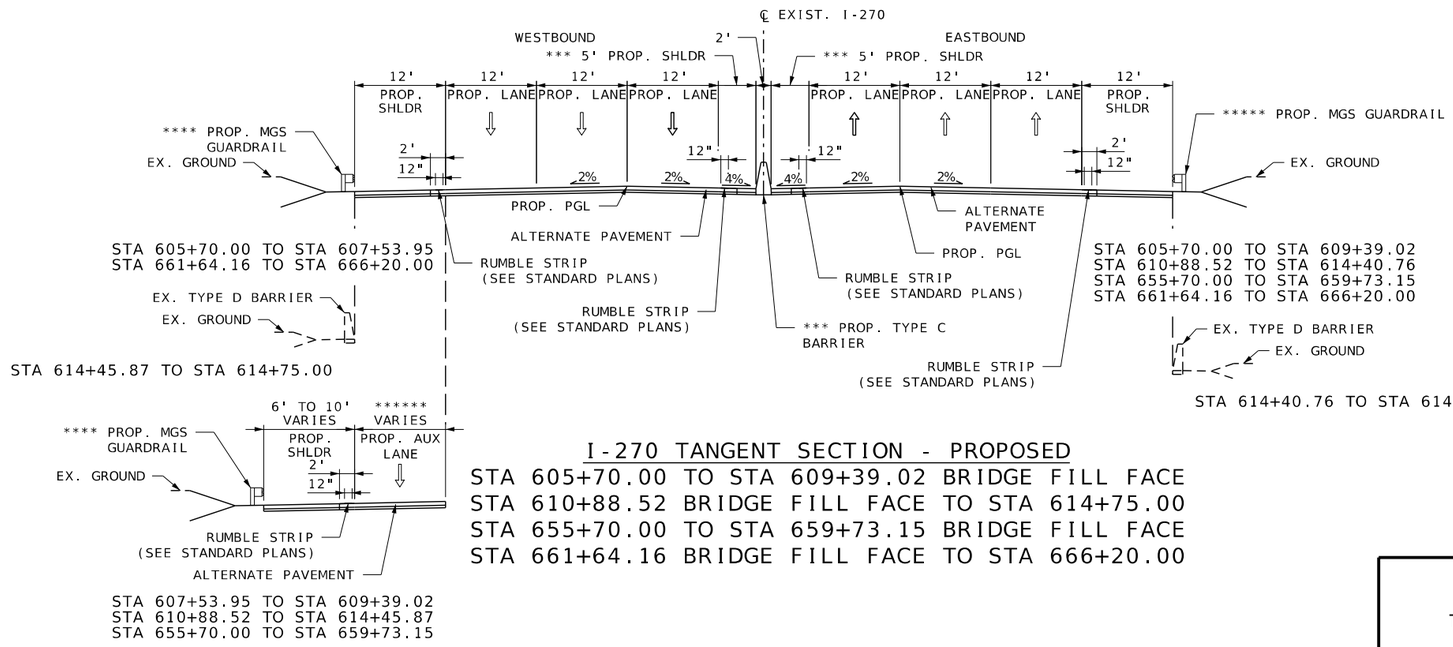

I-270 TANGENT SECTION - PROPOSED

STA 605+70.00 TO STA 609+39.02 BRIDGE FILL FACE
STA 610+88.52 BRIDGE FILL FACE TO STA 614+75.00
STA 655+70.00 TO STA 659+73.15 BRIDGE FILL FACE
STA 661+64.16 BRIDGE FILL FACE TO STA 666+20.00

N.T.S. - FOLLOW DIMENSIONS

TYPICAL SECTIONS
SHEET 6 OF 10

STATE OF MISSOURI
EUGENE LOUIS KLEKER JR.
NUMBER PE-2010000912
PROFESSIONAL ENGINEER
THIS SHEET HAS BEEN SIGNED, SEALED, AND DATED ELECTRONICALLY.

IF A SEAL IS PRESENT ON THIS SHEET IT HAS BEEN ELECTRONICALLY SEALED AND DATED.

DATE PREPARED 3/25/2026
ROUTE I-270 | STATE MO
DISTRICT SL | SHEET NO. 2
COUNTY ST. LOUIS
JOB NO. JSL0021
CONTRACT ID.
PROJECT NO.
BRIDGE NO.

DESCRIPTION | DATE

MISSOURI HIGHWAYS AND TRANSPORTATION COMMISSION
105 WEST CAPITOL
JEFFERSON CITY, MO 65102
1-888-ASK-MODOT (1-888-275-6636)

HDR Engineering, Inc.
1001 Highlands Plaza Drive
Suite 200
St. Louis, MO 63110-1337
314-425-8300
Certificate of Authority: 000856

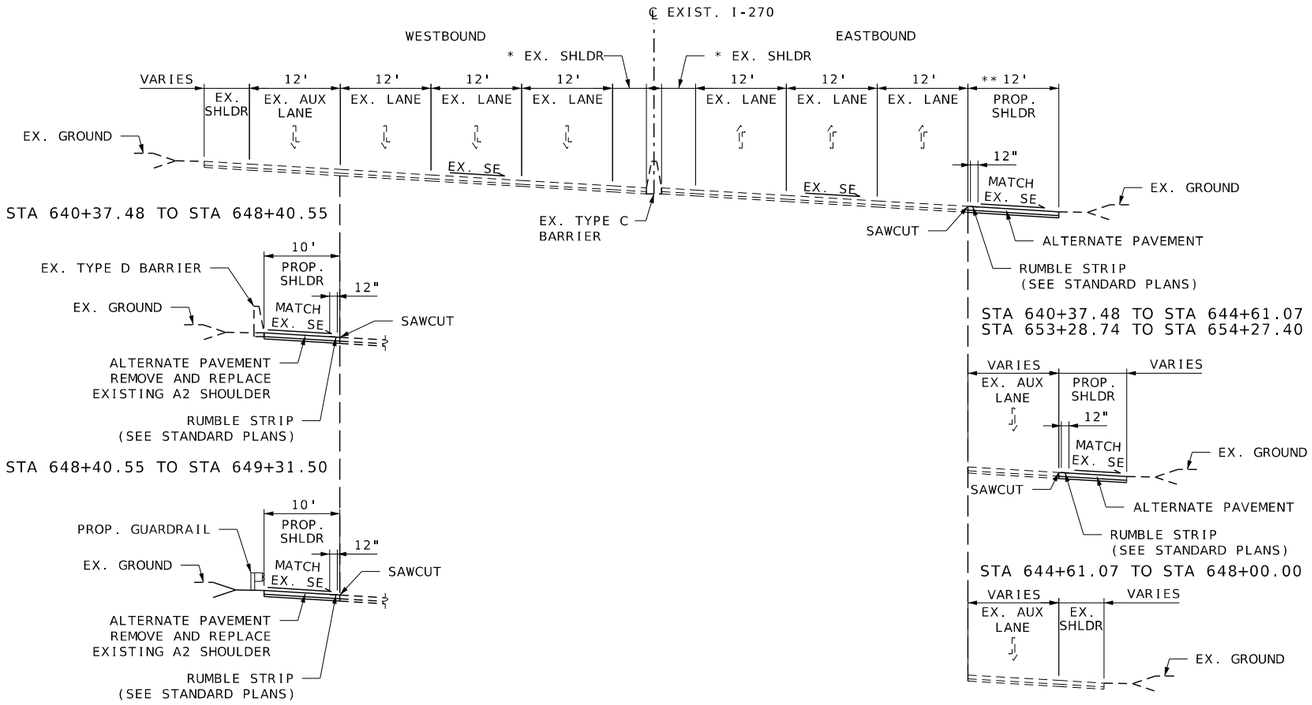

* 5' SHOULDER
FROM STA 640+37.48 TO STA 652+59.92

TRANSITION FROM 5' SHOULDER TO 4.5' SHOULDER
FROM STA 652+59.92 TO STA 652+89.92

4.5' SHOULDER
FROM STA 652+89.92 TO STA 654+27.40

** MATCH EXISTING SHOULDER WIDTH
FROM STA 640+37.48 TO STA 644+61.07
FROM STA 653+28.74 TO STA 654+27.40

I-270 SUPERELEVATION SECTION - PROPOSED
STA 640+37.48 TO STA 654+27.40

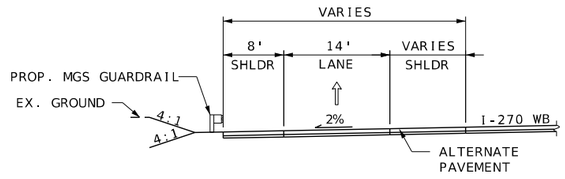

I-270 WB RAMP TO DUNN RD - PROPOSED
STA 655+85.00 TO STA 659+64.98

N.T.S. - FOLLOW DIMENSIONS

TYPICAL SECTIONS
SHEET 7 OF 10

STATE OF MISSOURI
EUGENE LOUIS KUELKER JR.
NUMBER PE-2011000912
PROFESSIONAL ENGINEER
THIS SHEET HAS BEEN SIGNED, SEALED, AND DATED ELECTRONICALLY.

IF A SEAL IS PRESENT ON THIS SHEET IT HAS BEEN ELECTRONICALLY SEALED AND DATED.

DATE PREPARED 3/25/2026
ROUTE I-270 | STATE MO
DISTRICT SL | SHEET NO. 2
COUNTY ST. LOUIS
JOB NO. JSL0021
CONTRACT ID.
PROJECT NO.
BRIDGE NO.

DESCRIPTION | DATE

MISSOURI HIGHWAYS AND TRANSPORTATION COMMISSION
105 WEST CAPITOL
JEFFERSON CITY, MO 65102
1-888-ASK-MODOT (1-888-275-6636)

HDR Engineering, Inc.
1001 Highlands Plaza Drive
Suite 200
St. Louis, MO 63110-1337
314-425-8300
Certificate of Authority: 000856

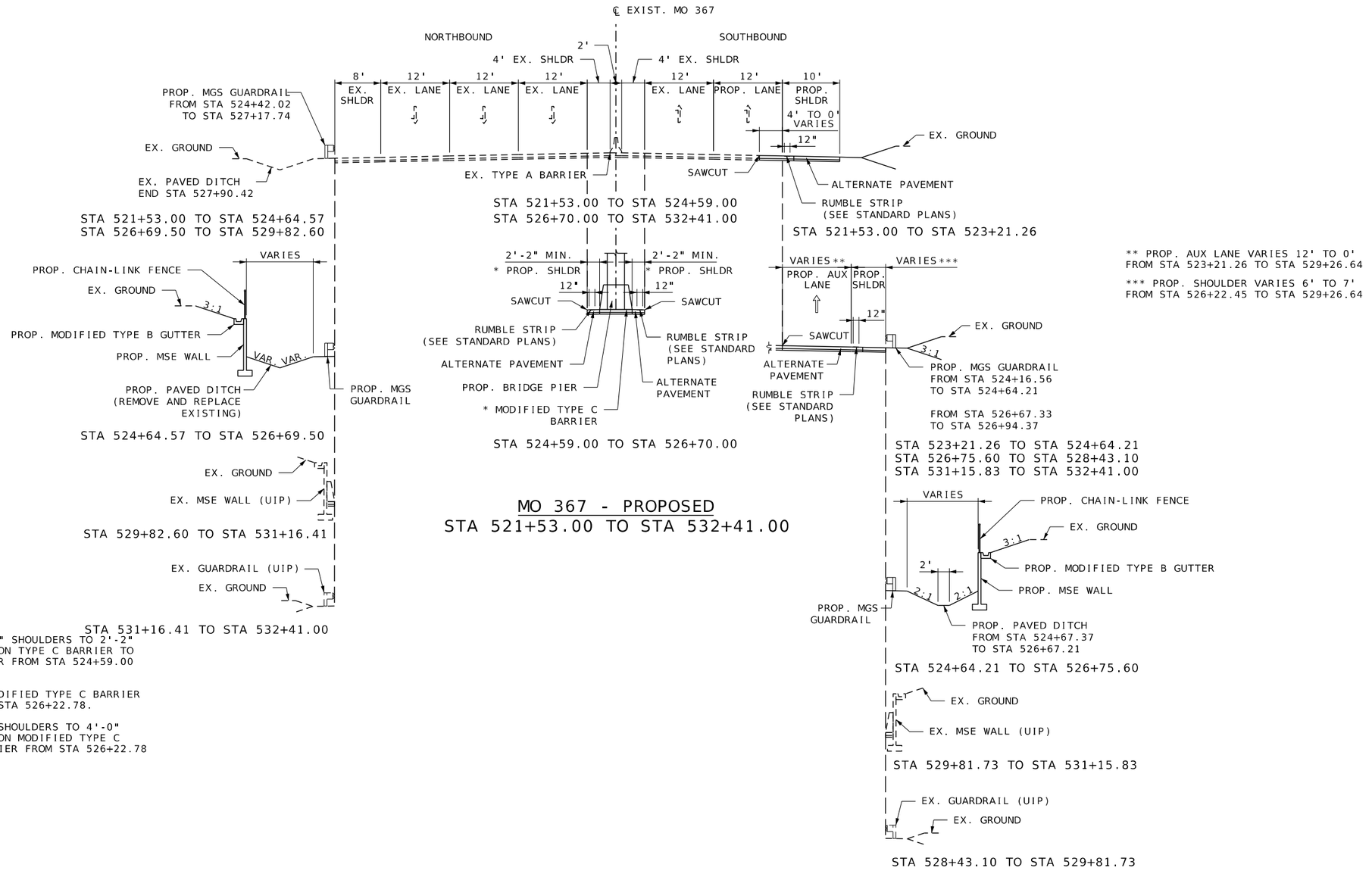

** PROP. AUX LANE VARIES 12' TO 0' FROM STA 523+21.26 TO STA 529+26.64

*** PROP. SHOULDER VARIES 6' TO 7' FROM STA 526+22.45 TO STA 529+26.64

* TRANSITION FROM 4'-0" SHOULDERS TO 2'-2" SHOULDERS AND TRANSITION TYPE C BARRIER TO MODIFIED TYPE C BARRIER FROM STA 524+59.00 TO STA 525+06.11.

2'-2" SHOULDERS AND MODIFIED TYPE C BARRIER FROM STA 525+06.11 TO STA 526+22.78.

TRANSITION FROM 2'-2" SHOULDERS TO 4'-0" SHOULDERS AND TRANSITION MODIFIED TYPE C BARRIER TO TYPE C BARRIER FROM STA 526+22.78 TO STA 526+70.00.

N.T.S. - FOLLOW DIMENSIONS

TYPICAL SECTIONS
SHEET 8 OF 10

STATE OF MISSOURI
EUGENE LOUIS KUELKER JR.
NUMBER PE-2010009912
PROFESSIONAL ENGINEER
THIS SHEET HAS BEEN SIGNED, SEALED, AND DATED ELECTRONICALLY.

IF A SEAL IS PRESENT ON THIS SHEET IT HAS BEEN ELECTRONICALLY SEALED AND DATED.

DATE PREPARED 3/25/2026
ROUTE I-270 | STATE MO
DISTRICT SL | SHEET NO. 2
COUNTY ST. LOUIS
JOB NO. JSL0021
CONTRACT ID.
PROJECT NO.
BRIDGE NO.

DESCRIPTION | DATE

MISSOURI HIGHWAYS AND TRANSPORTATION COMMISSION
105 WEST CAPITOL
JEFFERSON CITY, MO 65102
1-888-ASK-MODOT (1-888-275-6636)
MoDOT
HDR Engineering, Inc.
1001 Highlands Plaza Drive
Suite 200
St. Louis, MO 63110-1337
314-425-8300
Certificate of Authority: 000856

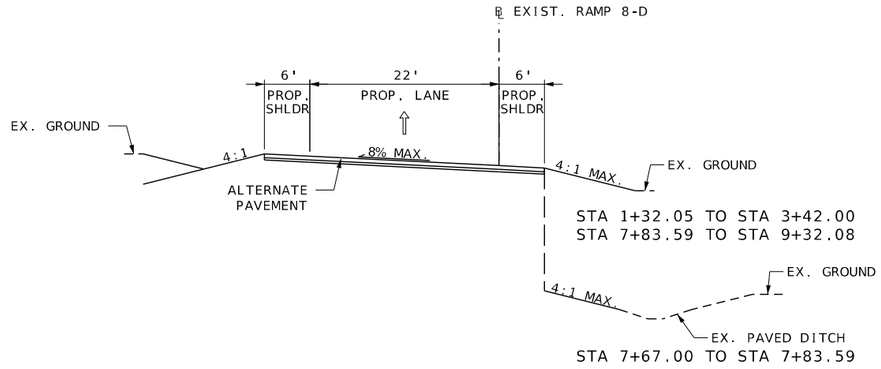

RAMP 8-D - PROPOSED
(I-270 WB TO MO 367 SB)
STA 1+32.05 TO STA 3+42.00
STA 7+67.00 TO STA 9+32.08

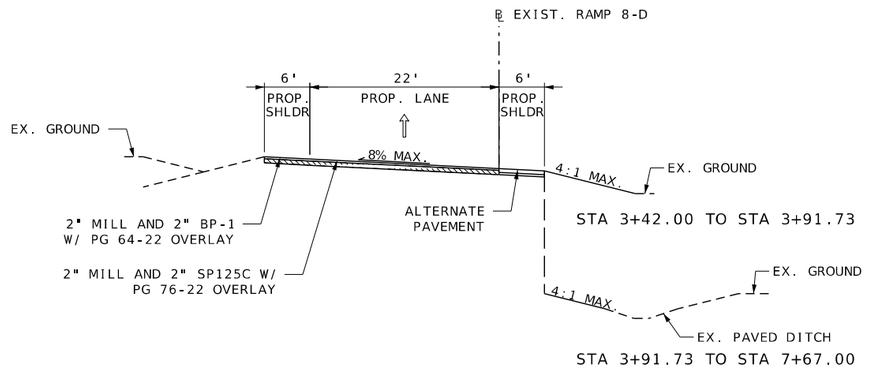

RAMP 8-D - PROPOSED
(I-270 WB TO MO 367 SB)
STA 3+42.00 TO STA 7+67.00

N.T.S. - FOLLOW DIMENSIONS

TYPICAL SECTIONS
SHEET 9 OF 10

STATE OF MISSOURI
EUGENE LOUIS KUELKER JR.
NUMBER PE-2011000912
PROFESSIONAL ENGINEER
THIS SHEET HAS BEEN SIGNED, SEALED, AND DATED ELECTRONICALLY.

DATE PREPARED: 3/25/2026
ROUTE: I-270 | STATE: MO
DISTRICT: SL | SHEET NO.: 2
COUNTY: ST. LOUIS
JOB NO.: JSL0021
CONTRACT ID.:
PROJECT NO.:
BRIDGE NO.:

DESCRIPTION | DATE

IF A SEAL IS PRESENT ON THIS SHEET IT HAS BEEN ELECTRONICALLY SEALED AND DATED.

MISSOURI HIGHWAYS AND TRANSPORTATION COMMISSION
105 WEST CAPITOL
JEFFERSON CITY, MO 65102
1-888-ASK-MODOT (1-888-275-6636)

HDR Engineering, Inc.
1001 Highlands Plaza Drive
Suite 200
St. Louis, MO 63110-1337
314-425-8300
Certificate of Authority: 000856

c:\pwworking\central01\d4324513\002_TS09_JSL0021_I10.dgn 2:38:04 PM 3/25/2026

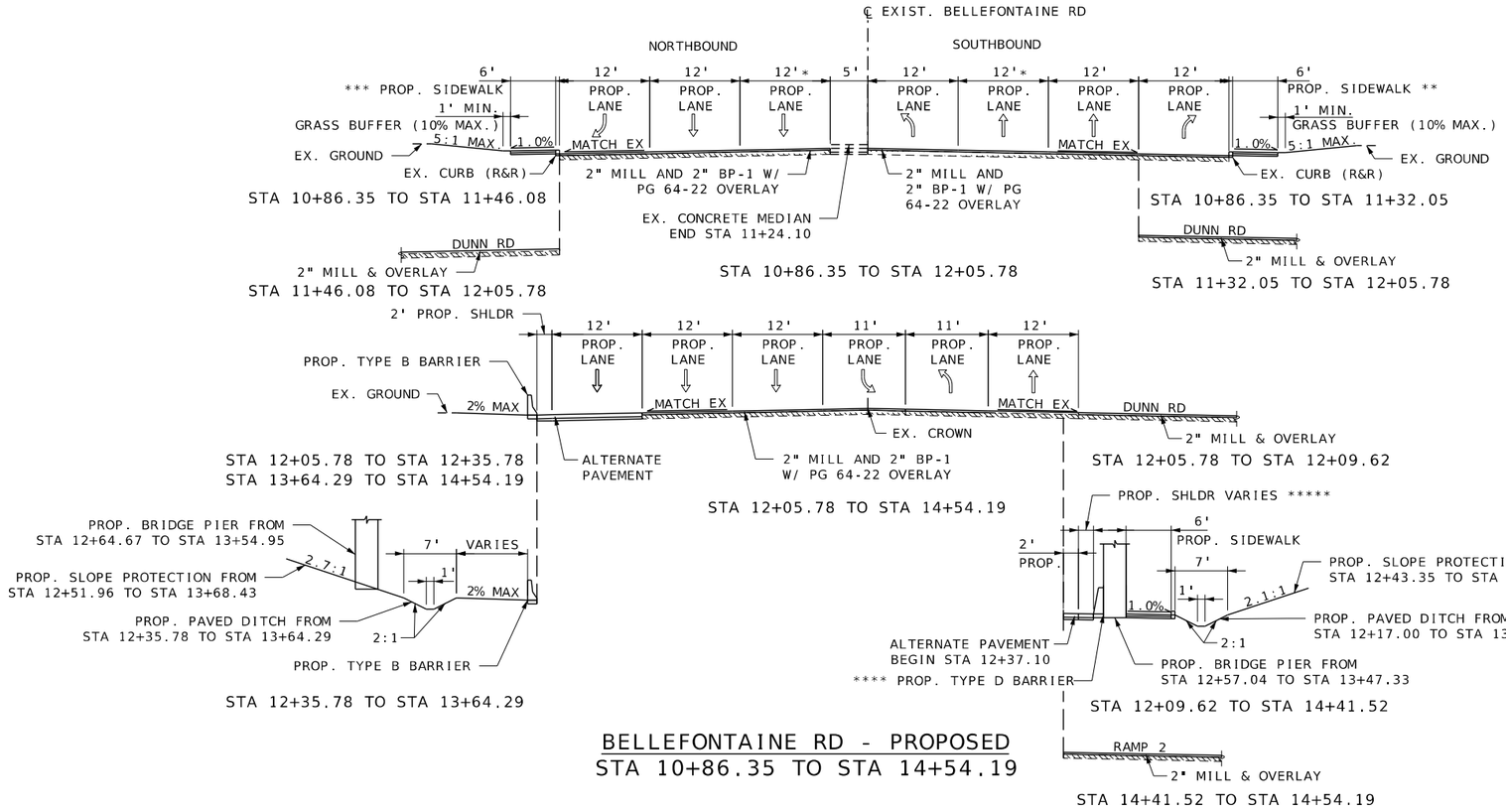

BELLEFONTAINE RD - PROPOSED
STA 10+86.35 TO STA 14+54.19

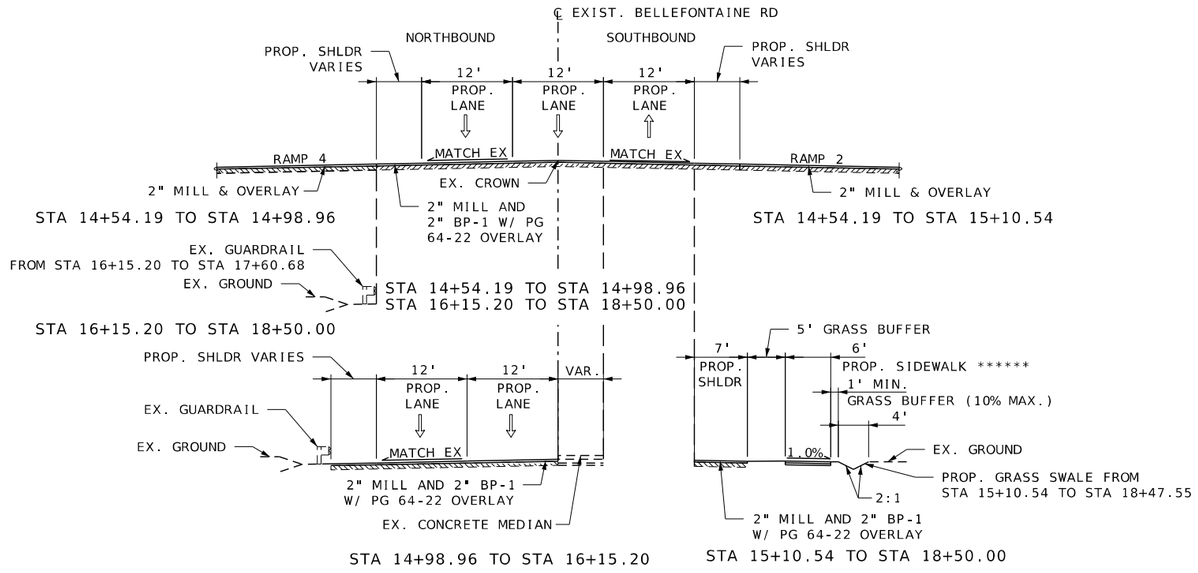

BELLEFONTAINE RD - PROPOSED
STA 14+54.19 TO STA 18+50.00

N.T.S. - FOLLOW DIMENSIONS

* TRANSITION PROP. LANE WIDTH FROM 12' TO 11' FROM STA 11+24.10 TO STA 12+05.78

** SOUTHBOUND PROP. SIDEWALK FROM STA 9+77.70 TO STA 11+32.05

*** NORTHBOUND PROP. SIDEWALK FROM STA 10+56.14 TO STA 11+46.08

**** TRANSITION FROM 6" CURB TO FULL HEIGHT TYPE D BARRIER FROM STA 12+09.62 TO STA 12+37.10

PROP. TYPE D BARRIER FROM STA 12+37.10 TO STA 14+04.81

***** 1'-11.5" SHOULDER WIDTH FROM STA 12+37.10 TO STA 14+04.81

TRANSITION FROM 1'-11.5" TO 11'-0" FROM STA 14+04.81 TO STA 14+41.52

****** PROP. SIDEWALK FROM STA 15+10.54 TO STA 18+37.55

TYPICAL SECTIONS
SHEET 10 OF 10

STATE OF MISSOURI
EUGENE LOUIS KUEKER JR.
NUMBER PE-2010000912
PROFESSIONAL ENGINEER
THIS SHEET HAS BEEN SIGNED, SEALED, AND DATED ELECTRONICALLY.

DATE PREPARED 3/25/2026
ROUTE I-270 | STATE MO
DISTRICT SL | SHEET NO. 2
COUNTY ST. LOUIS
JOB NO. JSL0021
CONTRACT ID.
PROJECT NO.
BRIDGE NO.

DESCRIPTION | DATE

IF A SEAL IS PRESENT ON THIS SHEET IT HAS BEEN ELECTRONICALLY SEALED AND DATED.

MISSOURI HIGHWAYS AND TRANSPORTATION COMMISSION
105 WEST CAPITOL
JEFFERSON CITY, MO 65102
1-888-ASK-MODOT (1-888-275-6636)

HDR Engineering, Inc.
1001 Highlands Plaza Drive
Suite 200
St. Louis, MO 63110-1337
314-425-8300
Certificate of Authority: 000856

REMOVAL OF IMPROVEMENTS - TABLE 1

SHEET NO.	FROM STA	TO STA	ROADWAY	LOCATION	DESCRIPTION	REMARKS
9	604+44	605+84	I-270	LT	GUARDRAIL	140 LF
9	607+29	609+17	I-270	RT	GUARDRAIL	188 LF
9	607+49	609+16	I-270	LT	GUARDRAIL	167 LF
9	611+20	614+41	I-270	RT	GUARDRAIL	321 LF
9	611+20	614+46	I-270	LT	GUARDRAIL	326 LF
11	632+42	633+89	I-270	LT	GUARDRAIL	147 LF
11	641+39	642+17	I-270	RT	GUARDRAIL	78 LF
11	640+97	641+26	I-270	RT	GUARDRAIL	29 LF
11	641+10	641+25	I-270	RT	BARRIER	15 LF
12, 13	655+85	659+67	I-270	LT	GUARDRAIL	382 LF
13	658+28	659+75	I-270	RT	GUARDRAIL	147 LF
13	661+45	676+15	I-270	LT	GUARDRAIL	1470 LF
13	661+46	664+31	I-270	RT	GUARDRAIL	285 LF
16	524+91	526+29	MO 367	RT	GUARDRAIL	138 LF
16	524+59	526+70	MO 367	CL	BARRIER	211 LF
17	12+11	12+45	BELLEFONTAINE RD	RT	GUARDRAIL	34 LF
17	12+08	12+52	BELLEFONTAINE RD	LT	GUARDRAIL	44 LF
17	12+52	13+88	BELLEFONTAINE RD	LT	BARRIER	136 LF
17	13+88	14+52	BELLEFONTAINE RD	LT	GUARDRAIL	64 LF
17	12+45	13+76	BELLEFONTAINE RD	RT	BARRIER	131 LF
17	9+78	11+32	BELLEFONTAINE RD	RT	CURB	154 LF
17	10+56	11+46	BELLEFONTAINE RD	LT	CURB	90 LF
9, 10	598+34	606+77	I-270	LT	PAVEMENT REMOVAL	1040.3 SY
9, 10	601+70	609+20	I-270	RT	PAVEMENT REMOVAL	1043 SY
10	605+70	609+20	I-270	LT	PAVEMENT REMOVAL	1915.9 SY
10	605+70	609+20	I-270	RT	PAVEMENT REMOVAL	1400.7 SY
10	611+08	614+75	I-270	LT	PAVEMENT REMOVAL	1814.4 SY
10	611+08	614+75	I-270	RT	PAVEMENT REMOVAL	1469.3 SY
10, 11	611+08	620+53	I-270	RT	PAVEMENT REMOVAL	1067.8 SY
10, 11	613+02	620+11	I-270	LT	PAVEMENT REMOVAL	729 SY
11, 12	622+47	648+00	I-270	LT	PAVEMENT REMOVAL	2712.8 SY
11, 12	627+57	644+61	I-270	RT	PAVEMENT REMOVAL	2136.1 SY
12	648+41	655+85	I-270	LT	PAVEMENT REMOVAL	831.4 SY
12, 13	653+29	669+58	I-270	RT	PAVEMENT REMOVAL	798.4 SY
12, 13	655+70	659+54	I-270	LT	PAVEMENT REMOVAL	1718.6 SY
12, 13	655+70	659+57	I-270	RT	PAVEMENT REMOVAL	1734.2 SY
12, 13	655+85	659+50	I-270	LT	PAVEMENT REMOVAL	940.6 SY
13, 14, 15	661+80	685+98	I-270	LT	PAVEMENT REMOVAL	2560.1 SY
13	661+80	666+20	I-270	LT	PAVEMENT REMOVAL	1971.4 SY
13	661+84	666+20	I-270	RT	PAVEMENT REMOVAL	1955.7 SY
13	661+87	667+65	I-270	RT	PAVEMENT REMOVAL	750 SY
13, 14	668+80	672+10	I-270	RT	PAVEMENT REMOVAL	2084.1 SY
9	0+72	9+10	RAMP 8-D	RT/LT	PAVEMENT REMOVAL	2084.1 SY
16	521+53	530+34	MO 367	RT	PAVEMENT REMOVAL	1538.6 SY
16	524+59	526+70	MO 367	CL	PAVEMENT REMOVAL	120.8 SY
17	12+06	14+54	BELLEFONTAINE RD	LT	PAVEMENT REMOVAL	245.8 SY
17	12+37	14+42	BELLEFONTAINE RD	RT	PAVEMENT REMOVAL	124.7 SY
17	11+27	11+58	BELLEFONTAINE RD	RT	MEDIAN ISLAND PAVEMENT	41.2 SY
17	11+27	11+58	BELLEFONTAINE RD	RT	MEDIAN ISLAND	31.5 SY
17	14+75	14+93	BELLEFONTAINE RD	RT	MEDIAN ISLAND PAVEMENT	25.6 SY
17	14+75	14+93	BELLEFONTAINE RD	RT	MEDIAN ISLAND	31.5 SY

TOTAL 1 LUMP SUM

REMOVAL OF IMPROVEMENTS - TABLE 2

SHEET NO.	FROM STA	TO STA	ROADWAY	LOCATION	DESCRIPTION	REMARKS
16	525+12	526+24	MO 367	LT	SLOPE PROTECTION	696.3 SY
16	525+10	526+24	MO 367	RT	SLOPE PROTECTION	510.5 SY
17	12+12	13+88	BELLEFONTAINE RD	LT	SLOPE PROTECTION	1079.2 SY
17	11+96	13+74	BELLEFONTAINE RD	RT	SLOPE PROTECTION	848.1 SY
17	12+07	14+42	BELLEFONTAINE RD	RT	SIDEWALK	166.4 SY
8	598+34		I-270	LT	FULL DEPTH SAWCUT	12 LF
8, 9	598+34	604+70	I-270	LT	FULL DEPTH SAWCUT	636 LF
8	601+70		I-270	RT	FULL DEPTH SAWCUT	12 LF
8, 9	601+70	604+70	I-270	RT	FULL DEPTH SAWCUT	300 LF
9	604+70		I-270	LT	SAWCUT	41 LF
9	604+70		I-270	RT	SAWCUT	41 LF
9	615+75		I-270	LT	SAWCUT	41 LF
9	615+75		I-270	RT	SAWCUT	41 LF
9, 10	615+75	620+11	I-270	LT	FULL DEPTH SAWCUT	436 LF
10	620+11		I-270	RT	FULL DEPTH SAWCUT	13 LF
9, 10	615+75	620+53	I-270	RT	FULL DEPTH SAWCUT	478 LF
10	619+81	620+53	I-270	RT	FULL DEPTH SAWCUT	72 LF
10	622+47		I-270	LT	FULL DEPTH SAWCUT	12 LF
10, 11	622+47	634+75	I-270	LT	FULL DEPTH SAWCUT	1228 LF
10	627+57		I-270	RT	FULL DEPTH SAWCUT	11 LF
10, 11, 12	627+57	648+00	I-270	RT	FULL DEPTH SAWCUT	2043 LF
10	634+75		I-270	LT	FULL DEPTH SAWCUT	11 LF
12	648+00		I-270	RT	FULL DEPTH SAWCUT	20 LF
12	648+41		I-270	LT	FULL DEPTH SAWCUT	10 LF
12	648+41	654+70	I-270	LT	FULL DEPTH SAWCUT	629 LF
12	653+29		I-270	RT	FULL DEPTH SAWCUT	16 LF
12	653+29	654+70	I-270	RT	FULL DEPTH SAWCUT	141 LF
12	654+70		I-270	LT	SAWCUT	41 LF
12	654+70		I-270	RT	SAWCUT	41 LF
12	655+85		I-270	LT	FULL DEPTH SAWCUT	26 LF
13	667+20		I-270	LT	SAWCUT	41 LF
13	667+20		I-270	RT	SAWCUT	41 LF
13, 14, 15	667+20	685+98	I-270	LT	FULL DEPTH SAWCUT	1878 LF
13	667+20	667+65	I-270	RT	FULL DEPTH SAWCUT	45 LF
13	667+65		I-270	RT	FULL DEPTH SAWCUT	12 LF
13	668+80		I-270	RT	FULL DEPTH SAWCUT	7 LF
13, 14	668+80	672+10	I-270	RT	FULL DEPTH SAWCUT	330 LF
14	672+10		I-270	RT	FULL DEPTH SAWCUT	8 LF
15	685+98		I-270	LT	FULL DEPTH SAWCUT	10 LF
16	521+53		MO 367	RT	FULL DEPTH SAWCUT	14 LF
16	521+53	532+41	MO 367	RT	FULL DEPTH SAWCUT	1088 LF
16	524+59		MO 367	RT/LT	FULL DEPTH SAWCUT	8 LF
16	524+59	526+70	MO 367	LT	FULL DEPTH SAWCUT	211 LF
16	524+59	526+70	MO 367	RT	FULL DEPTH SAWCUT	211 LF
16	526+70		MO 367	RT/LT	FULL DEPTH SAWCUT	8 LF
16	532+41		MO 367	RT	FULL DEPTH SAWCUT	7 LF
9	3+42		RAMP 8-D	RT/LT	FULL DEPTH SAWCUT	31 LF
9	7+67		RAMP 8-D	RT/LT	FULL DEPTH SAWCUT	30 LF
17	10+86		BELLEFONTAINE RD	RT/LT	SAWCUT	87 LF
17	18+50		BELLEFONTAINE RD	RT/LT	SAWCUT	49 LF
17	661+89		DUNN RD	RT/LT	SAWCUT	54 LF
17	664+24		DUNN RD	RT/LT	SAWCUT	51 LF
17	17+25		RAMP 2	RT/LT	SAWCUT	51 LF
17	1+13		RAMP 4	RT/LT	SAWCUT	30 LF
9-15			I-270	RT	RUMBLE STRIPS	80 STA

TOTAL 1 LUMP SUM

SUMMARY OF QUANTITIES
SHEET 1 OF 19

STATE OF MISSOURI
EUGENE LOUIS KUELKER JR.
NUMBER PE-2010009912
PROFESSIONAL ENGINEER

THIS SHEET HAS BEEN SIGNED, SEALED, AND DATED ELECTRONICALLY.

DATE PREPARED
3/25/2026

ROUTE	STATE
I-270	MO
DISTRICT	SHEET NO.
SL	3

COUNTY
ST. LOUIS

JOB NO.
JSL0021

CONTRACT ID.

PROJECT NO.

BRIDGE NO.

DESCRIPTION	DATE

IF A SEAL IS PRESENT ON THIS SHEET IT HAS BEEN ELECTRONICALLY SEALED AND DATED.

MISSOURI HIGHWAYS AND TRANSPORTATION COMMISSION

105 WEST CAPITOL
JEFFERSON CITY, MO 65102
1-888-ASK-MODOT (1-888-275-6636)

HDR Engineering, Inc.
1001 Highlands Plaza Drive
Suite 200
St. Louis, MO 63110-1337
314-425-8300
Certificate of Authority: 000856

REMOVAL OF IMPROVEMENTS - ITS

SHEET NO.	FROM STA	TO STA	ROADWAY	LOCATION	DESCRIPTION	REMARKS
143	659+43.00		I-270	85' LT	ITS POLE FOUNDATION (SALVAGE POLE)	
143	661+33.00		I-270	170' LT	ITS PULL BOX	
143	661+43.00		I-270	201' LT	ITS PULL BOX	
143	661+43.70		I-270	57' RT	ITS PULL BOX	
143	661+67.45		I-270	58' RT	ITS POLE, FOUNDATION AND DETECTOR	

TOTAL 1 LUMP SUM

REMOVAL OF IMPROVEMENTS - DRAINAGE

SHEET NO.	FROM STA	TO STA	ROADWAY	LOCATION	DESCRIPTION	REMARKS
123	609+06.37	609+59.09	I-270	LT	INLET AND 64 LF OF 15" RCP	
123	609+06.59		I-270	LT	INLET AND 54 LF OF 15" RCP	
123	609+06.67		I-270	RT	INLET AND 53 LF OF 12" RCP	
123	609+06.54		I-270	RT	INLET	
123	611+20.08		I-270	LT	INLET AND 113 LF OF 12" RCP	
123	611+21.22		I-270	RT	INLET	
127	655+53.89	658+52.98	I-270	RT	300 LF 12" PIPE	
127	658+53.04		I-270	LT	INLET	
127	658+52.98	659+52.40	I-270	RT	INLET AND 100 LF OF 12" PIPE	
127	659+51.89		I-270	LT	INLET	
127	659+52.40	659+49.41	I-270	RT	INLET AND 95 LF OF 18" PIPE AND FES	
127	661+08.26		I-270	RT	INLET	
127	661+64.39		I-270	LT	INLET	
127	661+71.66		I-270	RT	INLET	
123	4+04.77	4+04.55	RAMP 8-D	RT	INLET AND 11 LF OF 12" PIPE	
123	8+07.33	8+07.38	RAMP 8-D	RT	INLET AND 7 LF OF 12" PIPE AND FES	
123	9+62.01		RAMP 8-D	RT	INLET	

TOTAL 1 LUMP SUM

REMOVAL OF IMPROVEMENTS - LIGHTING

SHEET NO.	FROM STA	TO STA	ROADWAY	LOCATION	DESCRIPTION	REMARKS
153	10+23		EX. BELLEFONTAINE RD	76.9' LT	LIGHTING CONTROLLER AND POWER SUPPLY	
153	11+03		EX. BELLEFONTAINE RD	56.1' RT	LIGHT POLE AND FOUNDATION	
153	11+25		EX. BELLEFONTAINE RD	68.1' LT	LIGHTING CONTROLLER AND POWER SUPPLY	
153	11+44		EX. BELLEFONTAINE RD	72.3' LT	LIGHT POLE AND FOUNDATION	
153	12+29		EX. BELLEFONTAINE RD	58.8' RT	LIGHT POLE AND FOUNDATION	
153	12+32		EX. BELLEFONTAINE RD	50.2' RT	LIGHTING PULLBOX	
153	12+36		EX. BELLEFONTAINE RD	40.5' LT	LIGHTING PULLBOX	
153	12+40		EX. BELLEFONTAINE RD	39.2' LT	LIGHT POLE AND FOUNDATION	
153	14+05		EX. BELLEFONTAINE RD	42.1' RT	LIGHT POLE AND FOUNDATION	
153	14+32		EX. BELLEFONTAINE RD	49.6' LT	LIGHT POLE AND FOUNDATION	
153	15+08		EX. BELLEFONTAINE RD	43.6' LT	LIGHT POLE AND FOUNDATION	
153	16+22		EX. BELLEFONTAINE RD	32.7' LT	LIGHT POLE AND FOUNDATION	
153	16+81		EX. RAMP 2	38.8' RT	LIGHT POLE AND FOUNDATION	
153	17+22		EX. RAMP 2	43.7' RT	LIGHTING PULLBOX	
154	526+66		EX. MO-367	52.5' RT	LIGHT POLE AND FOUNDATION	SALVAGE POLE/LUM. & RELOCATE PER PLAN
154	606+32		EX. I-270	108.3' LT	LIGHT POLE AND FOUNDATION	
154	612+06		EX. I-270	73.5' LT	LIGHT POLE AND FOUNDATION	
154	523+96		EX. MO-367	69.6' RT	LIGHT POLE AND FOUNDATION	
155	251+32		EX. MO-367	213.3' RT	POLE AND LUMINAIRE ONLY	
155	252+60		EX. MO-367	209.0' RT	POLE AND LUMINAIRE ONLY	
155	505+14		EX. MO-367	211.6' RT	POLE AND LUMINAIRE ONLY	
155	514+69		EX. MO-367	74.4' RT	LIGHT POLE AND FOUNDATION	
155	514+74		EX. MO-367	74.0' LT	LIGHT POLE AND FOUNDATION	
155	536+44		EX. MO-367	79.1' LT	LIGHT POLE AND FOUNDATION	
155	537+03		EX. MO-367	63.8' RT	POLE AND LUMINAIRE ONLY	
155	620+33		EX. I-270	106.5' LT	LIGHT POLE AND FOUNDATION	
155	626+22		EX. I-270	72.2' RT	LIGHT POLE AND FOUNDATION	
155	638+16		EX. I-270	72.2' LT	POLE AND LUMINAIRE ONLY	

TOTAL 1 LUMP SUM

REMOVAL OF IMPROVEMENTS - SIGNALS

SHEET NO.	FROM STA	TO STA	ROADWAY	LOCATION	DESCRIPTION	REMARKS
167	663+46		EX. DUNN RD	49.8' LT	SIGNAL CABINET	
167	663+46		EX. DUNN RD	43.9' LT	PULL BOX	
167	11+08		EX. BELLEFONTAINE RD	52.3' LT	SIGNAL POLE	
167	663+42		EX. DUNN RD	51.8' LT	POWER SUPPLY	
167	11+35		EX. BELLEFONTAINE RD	31.8' RT	PULL BOX	
167	11+39		EX. BELLEFONTAINE RD	33.3' RT	PEDESTAL POLE	
167	661+96		EX. DUNN RD	40.5' LT	PULL BOX	
167	662+03		EX. DUNN RD	38.7' LT	SIGNAL POLE	
167	662+15		EX. DUNN RD	32.1' RT	PULL BOX	
167	12+07		EX. BELLEFONTAINE RD	51.2' RT	SIGNAL POLE	
167	663+38		EX. DUNN RD	37.8' RT	SIGNAL POLE	
167	663+45		EX. DUNN RD	35.0' RT	PULL BOX	
168	14+32		EX. BELLEFONTAINE RD	41.0' LT	SIGNAL POLE	
168	0+45		EX RAMP 4	36.3' LT	PULL BOX	
168	0+52		EX RAMP 4	18.3' RT	SIGNAL POLE	
168	0+46		EX RAMP 4	23.8' RT	PULL BOX	
168	15+09		EX. BELLEFONTAINE RD	44.0' LT	SIGNAL CABINET	
168	15+46		EX. BELLEFONTAINE RD	56.2' RT	SIGNAL POLE	
168	17+32		EX RAMP 2	47.4' RT	PULL BOX	
168	17+64		EX RAMP 2	8.3' RT	PULL BOX	
168	17+58		EX RAMP 2	8.3' RT	PEDESTAL POLE	
168	14+28		EX. BELLEFONTAINE RD	48.4' RT	PULL BOX	
168	17+44		EX RAMP 2	34.1' LT	PEDESTAL POLE	

TOTAL 1 LUMP SUM

REMOVAL OF IMPROVEMENTS - SIGNS

SHEET NO.	STA	ROADWAY	LOCATION	DESCRIPTION	REMARKS
156	607+54	I-270	LT	SIGN	
156	608+94	I-270	RT	SIGN	
156	611+37	I-270	LT	SIGN	
157	661+80	I-270	LT	OVERHEAD SIGN	
156	520+12	MO 367	RT	SIGN	
156	520+38	MO 367	LT	SIGN	
156	520+79	MO 367	RT	SIGN	
156	524+25	MO 367	RT	SIGN	
157	11+23	BELLEFONTAINE RD	LT	SIGN	
157	-	BELLEFONTAINE RD	BRIDGE	SIGN	
157	-	BELLEFONTAINE RD	BRIDGE	SIGN	
157	10+13	BELLEFONTAINE RD	RT	SIGN	
157	11+03	BELLEFONTAINE RD	RT	SIGN	
157	11+03	BELLEFONTAINE RD	RT	SIGN	
157	11+08	BELLEFONTAINE RD	RT	SIGN ASSEMBLY	
157	11+29	BELLEFONTAINE RD	RT	SIGN	ON SIGNAL POLE
157	11+31	BELLEFONTAINE RD	LT	SIGN	
157	12+29	BELLEFONTAINE RD	RT	SIGN	
157	12+41	BELLEFONTAINE RD	RT	SIGN ASSEMBLY	
157	13+77	BELLEFONTAINE RD	RT	SIGN	
157	13+89	BELLEFONTAINE RD	LT	SIGN ASSEMBLY	
157	14+35	BELLEFONTAINE RD	RT	SIGN ASSEMBLY	
157	15+03	BELLEFONTAINE RD	CL	SIGN	
157	15+14	BELLEFONTAINE RD	LT	SIGN ASSEMBLY	
157	15+38	BELLEFONTAINE RD	RT	SIGN	
157	16+14	BELLEFONTAINE RD	CL	SIGN	
157	16+55	BELLEFONTAINE RD	RT	SIGN ASSEMBLY	
157	17+50	BELLEFONTAINE RD	LT	SIGN ASSEMBLY	
157	22+00	BELLEFONTAINE RD	LT	SIGN ASSEMBLY	
157	16+80	RAMP 2	LT	SIGN ASSEMBLY	
157	664+02	DUNN RD	LT	SIGN	

TOTAL 1 LUMP SUM

SUMMARY OF QUANTITIES
SHEET 2 OF 19

STATE OF MISSOURI
EUGENE LOUIS KUEVER JR.
NUMBER PE-2010009092
PROFESSIONAL ENGINEER

THIS SHEET HAS BEEN SIGNED, SEALED, AND DATED ELECTRONICALLY.

DATE PREPARED: 3/25/2026
ROUTE: I-270 | STATE: MO
DISTRICT: SL | SHEET NO.: 3
COUNTY: ST. LOUIS
JOB NO.: JSL0021
CONTRACT ID.:
PROJECT NO.:
BRIDGE NO.:

DESCRIPTION | DATE

IF A SEAL IS PRESENT ON THIS SHEET IT HAS BEEN ELECTRONICALLY SEALED AND DATED.

MISSOURI HIGHWAYS AND TRANSPORTATION COMMISSION
105 WEST CAPITOL
JEFFERSON CITY, MO 65102
1-888-ASK-MODOT (1-888-275-6636)

HDR Engineering, Inc.
1001 Highlands Plaza Drive
Suite 200
St. Louis, MO 63110-1337
314-425-8300
Certificate of Authority: 000856

TEMPORARY EROSION CONTROL (PRECONSTRUCTION) - TABLE 1

SHEET NO.	FROM STA	TO STA	ROADWAY	LOCATION	SILT FENCE LF	MULCHING ACRE	TEMPORARY SEEDING ACRE	ALTERNATE DITCH CHECK LF	CURB INLET CHECK EA	SEDIMENT TRAP ROCK CY	SEDIMENT TRAP EXCAVATION CY	SEDIMENT REMOVAL CY
94	4+04.90		RAMP 8-D	RT					1			1
94	3+91.73	4+73.34	RAMP 8-D	RT				20				2
94	4+73.34	7+77.40	RAMP 8-D	RT				110				11
94	8+07.39		RAMP 8-D	RT					1			1
94	9+61.98		RAMP 8-D	RT					1			1
93	599+25.60		I-270	LT					1			1
93	599+25.60		I-270	RT					1			1
94	608+44.20		I-270	LT					1			1
94	609+06.31		I-270	LT					1			1
94	609+06.31		I-270	RT					1			1
94	609+06.48		I-270	LT					1			1
94	609+06.65		I-270	RT					1			1
94	611+20.19		I-270	LT					1			1
94	611+21.32		I-270	RT					1			1
94	613+26.47		I-270	RT					1			1
96	640+77.32	641+82.19	I-270	RT				40				4
97	653+89.01	655+85.94	I-270	RT				60				6
97	655+53.95		I-270	LT					1			1
97	655+53.95		I-270	RT					1			1
98	655+85.94	657+60.80	I-270	RT				60				6
98	657+60.80	659+25.57	I-270	RT				30				3
98	658+53.05		I-270	LT					1			1
98	658+53.05		I-270	RT					1			1
98	659+48.72		I-270	RT						1	1	10
98	659+46.13		I-270	RT					1			1
98	659+52.20		I-270	LT					1			1
98	659+52.20		I-270	RT					1			1
98	661+64.78		I-270	LT					1			1
98	661+72.05		I-270	RT					1			1
98	664+02.24		I-270	CL					1			1
98	656+20.10	656+92.56	I-270	LT				20				2
98	657+55.65		I-270	LT					1			1
100	521+84.26		MO 367	RT					1			1
100	527+00.66	527+90.55	MO 367	LT				20				2
101	13+64.92		BELLEFONTAINE RD	RT					1			1
101	13+65.06		BELLEFONTAINE RD	LT					1			1
			TABLE 1 SUBTOTAL		0	0	0	360	27	1	1	73

MOBILIZATION	
LUMP SUM =	1

CONTRACTOR FURNISHED SURVEYING & STAKING	
LUMP SUM =	1

ADDITIONAL MOBILIZATION FOR SEEDING	
	EA
PAY TOTAL	3

VALVE ADJUSTMENTS

SHEET NO.	FROM STA	ROADWAY	LOCATION	WATER VALVE ADJUSTMENTS EACH	GAS VALVE ADJUSTMENTS EACH	CONCRETE MANHOLE APRON EACH	REMARKS
17	12+01.59	BELLEFONTAINE RD	RT	1			EX. WATER VALVE
17	18+15.19	BELLEFONTAINE RD	RT	1			EX. WATER VALVE
17	10+87.45	BELLEFONTAINE RD	LT		1		EX. GAS VALVE
17	10+88.54	BELLEFONTAINE RD	LT		1		EX. GAS VALVE
17	11+31.06	BELLEFONTAINE RD	LT		1		EX. GAS VALVE
17	11+55.35	BELLEFONTAINE RD	RT		1		EX. GAS VALVE
17	12+07.13	BELLEFONTAINE RD	RT		1		EX. GAS VALVE
17	12+36.10	BELLEFONTAINE RD	LT		1		EX. GAS VALVE
17	14+81.65	BELLEFONTAINE RD	RT		1		EX. GAS VALVE
17	10+93.31	BELLEFONTAINE RD	LT			1	EX. MANHOLE
			SUBTOTAL	2	7	1	
			PAY TOTAL	9		1	

SUMMARY OF QUANTITIES
SHEET 3 OF 19

STATE OF MISSOURI
EUGENE LOUIS KUECKER JR.
NUMBER PE-2011000912
PROFESSIONAL ENGINEER
THIS SHEET HAS BEEN SIGNED, SEALED, AND DATED ELECTRONICALLY.

DATE PREPARED 3/25/2026
ROUTE I-270 | STATE MO
DISTRICT SL | SHEET NO. 3
COUNTY ST. LOUIS
JOB NO. JSL0021
CONTRACT ID.
PROJECT NO.
BRIDGE NO.

DESCRIPTION | DATE

MISSOURI HIGHWAYS AND TRANSPORTATION COMMISSION
105 WEST CAPITOL
JEFFERSON CITY, MO 65102
1-888-ASK-MODOT (1-888-275-6636)

HDR Engineering, Inc.
1001 Highlands Plaza Drive
Suite 200
St. Louis, MO 63110-1337
314-425-8300
Certificate of Authority: 000856

IF A SEAL IS PRESENT ON THIS SHEET IT HAS BEEN ELECTRONICALLY SEALED AND DATED.

TEMPORARY EROSION CONTROL (DURING CONSTRUCTION) - TABLE 2

SHEET NO.	FROM STA	TO STA	ROADWAY	LOCATION	SILT FENCE LF	MULCHING ACRE	TEMPORARY SEEDING ACRE	ALTERNATE DITCH CHECK LF	CURB INLET CHECK EA	SEDIMENT TRAP ROCK CY	SEDIMENT TRAP EXCAVATION CY	SEDIMENT REMOVAL CY
97 - 103	598+34.00	679+45.00	I-270	LT/RT		3.3	3.3					
103	607+99.99	609+05.66	I-270	LT	107							11
103	608+94.63	609+47.22	I-270	RT	76							8
103	614+00.00		I-270	LT					1			1
103	614+00.00		I-270	RT					1			1
107	657+11.29		I-270	LT					1			1
107	657+11.29		I-270	RT					1			1
107	657+61.29		I-270	LT					1			1
107	657+61.29		I-270	RT					1			1
107	658+11.30		I-270	RT						1	1	10
107	658+11.31		I-270	LT					1			1
107	658+11.31		I-270	RT					1			1
107	664+02.01		I-270	LT					1			1
102, 103	662+05.96	674+43.84	I-270	LT	1244							124
103	0+00.00	10+46.52	RAMP 8-D	RT/LT		0.4	0.4					
107	659+96.63	661+86.14	DUNN RD	RT	192							19
107	13+71.25	15+24.95	RAMP 2	LT	154							15
107	15+33.95	17+14.16	RAMP 2	LT	183							18
107	1+11.13	2+95.38	RAMP 4	LT	185							19
109	521+35.00	532+41.00	MO 367	RT		0.1	0.1					
109	524+52.96	524+64.32	MO 367	RT				50				5
109	524+67.90		MO 367	RT						1	1	10
109	524+75.50		MO 367	RT					1			1
109	524+96.91	525+86.85	MO 367	RT				20				2
109	525+86.85	526+67.73	MO 367	RT				30				3
109	524+84.86	525+08.99	MO 367	LT				20				2
109	525+08.99	526+70.39	MO 367	LT				20				2
109	527+07.22		MO 367	LT				10				1
110	9+77.42	18+49.59	BELLEFONTAINE RD	RT/LT		0.1	0.1					
110	10+91.99		BELLEFONTAINE RD	RT					1			1
110	10+95.26		BELLEFONTAINE RD	LT					1			1
110	12+17.00	13+22.09	BELLEFONTAINE RD	RT				20				2
110	13+42.07		BELLEFONTAINE RD	LT					1			1
110	13+42.08		BELLEFONTAINE RD	RT					1			1
110	13+65.16		BELLEFONTAINE RD	LT					1			1
110	13+65.18		BELLEFONTAINE RD	RT					1			1
110	13+88.07		BELLEFONTAINE RD	RT					1			1
110	13+88.07		BELLEFONTAINE RD	LT					1			1
110	12+35.78		BELLEFONTAINE RD	LT				10				1
			TABLE 1 SUBTOTAL		0	0.0	0.0	360	27	1	1	73
			TABLE 2 SUBTOTAL		2141	3.9	3.9	180	18	2	2	270
			PAY TOTAL		2141	3.9	3.9	540	45	3	3	343

EARTHWORK

SHEET NO.	FROM STA	TO STA	ROADWAY	UNCLASSIFIED EXCAVATION CY	COMPACTING EMBANKMENT CY	EMBANKMENT IN PLACE CY	SELECT GRANULAR BACKFILL FOR STRUCTURAL SYSTEMS CY	LIGHTWEIGHT CELLULAR CONCRETE CY	COMPACTING IN CUT STA	REMARKS
XS-2 - XS-58	598+34.00	685+98.00	I-270 EB	7,814	12,528	4,714			87.6	
XS-59 - XS-122	598+34.00	685+98.00	I-270 WB	7,588	16,215	8,627			87.6	
XS-123 - XS-131	521+53.00	532+41.00	MO-367	1,092	2,730	1,638	1,762	5,118.1	10.9	GRANULAR BACKFILL FOR WALL A9491 = 1072 CY AND WALL A9492 = 690 CY LIGHTWEIGHT CELLULAR CONCRETE FOR WALL A9491 = 3028.4 CY AND WALL A9492 = 2089.7 CY
XS-132 - XS-138	10+60.00	18+50.00	BELLEFONTAINE RD	2,557	451				7.9	
XS-139 - XS-148	0+00.00	10+46.52	RAMP 8-D	1,303	53				10.5	
			SUBTOTAL	20,354	31,977	14,979	1,762	5,118.1	204.5	
			PAY TOTAL	20,354	31,977	14,979	1,762	5,118.1	204.5	

NOTE: SWELL FACTOR OF 15% APPLIED TO COMPACTING EMBANKMENT QUANTITY

CLEARING AND GRUBBING

FROM STA	TO STA	ROADWAY	LOCATION	CLEARING & GRUBBING ACRE
598+34	685+98	I-270/MO 367/BELLEFONTAINE RD/RAMP 8-D	ALL	5
			SUBTOTAL	5
			PAY TOTAL	5

SUMMARY OF QUANTITIES
SHEET 4 OF 19

STATE OF MISSOURI
EUGENE LOUIS KUEKER JR.
NUMBER PE-2010000912
PROFESSIONAL ENGINEER
THIS SHEET HAS BEEN SIGNED, SEALED, AND DATED ELECTRONICALLY.

DATE PREPARED 3/25/2026
ROUTE I-270 | STATE MO
DISTRICT SL | SHEET NO. 3
COUNTY ST. LOUIS
JOB NO. JSL0021
CONTRACT ID.
PROJECT NO.
BRIDGE NO.

DESCRIPTION | DATE

IF A SEAL IS PRESENT ON THIS SHEET IT HAS BEEN ELECTRONICALLY SEALED AND DATED.

MISSOURI HIGHWAYS AND TRANSPORTATION COMMISSION
105 WEST CAPITOL
JEFFERSON CITY, MO 65102
1-888-ASK-MODOT (1-888-275-6636)

HDR Engineering, Inc.
1001 Highlands Plaza Drive
Suite 200
St. Louis, MO 63110-1337
314-425-8300
Certificate of Authority: 000856

ALTERNATE I (ASPHALT) - PAVEMENT AND BASE - I-270 MAINLINE

SHEET NO.	FROM STA	TO STA	ROADWAY	DIRECTION	LOCATION	15.5" HMA SP125BSM (PG 76-22) SY	FURNISHING ROCK BASE (12 INCH) SY	PLACING ROCK (12 INCH) SY	REMARKS
9	605+70.00	609+04.52	I-270	WESTBOUND	LT	2078.2	2078	2078	MAINLINE
9	605+70.00	609+04.52	I-270	EASTBOUND	RT	1486.8	1487	1487	MAINLINE
9	611+23.02	614+75.00	I-270	WESTBOUND	LT	1862.0	1862	1862	MAINLINE
9	611+23.02	614+75.00	I-270	EASTBOUND	RT	1564.9	1565	1565	MAINLINE
12, 13	655+70.00	659+34.27	I-270	WESTBOUND	LT	2301.3	2301	2301	MAINLINE AND EXIT RAMP
12, 13	655+70.00	659+34.27	I-270	EASTBOUND	RT	1619	1619	1619	MAINLINE
13	662+03.02	666+20.00	I-270	WESTBOUND	LT	1853.2	1853	1853	MAINLINE
13	662+03.02	666+20.00	I-270	EASTBOUND	RT	1853.2	1853	1853	MAINLINE
					SUBTOTAL	14618.6	14618	14618	
					ALT. K, L SUBTOTAL	0	14725	14725	
					PAY TOTAL	14618.6	29343	29343	

ALTERNATE J (CONCRETE) - PAVEMENT AND BASE - I-270 MAINLINE

SHEET NO.	FROM STA	TO STA	ROADWAY	DIRECTION	LOCATION	11" PCCP SY	FURNISHING ROCK BASE (12 INCH) SY	PLACING ROCK (12 INCH) SY	REMARKS
9	605+70.00	609+04.52	I-270	WESTBOUND	LT	2078.2	2078	2078	MAINLINE
9	605+70.00	609+04.52	I-270	EASTBOUND	RT	1486.8	1487	1487	MAINLINE
9	611+23.02	614+75.00	I-270	WESTBOUND	LT	1862.0	1862	1862	MAINLINE
9	611+23.02	614+75.00	I-270	EASTBOUND	RT	1564.9	1565	1565	MAINLINE
12, 13	655+70.00	659+34.27	I-270	WESTBOUND	LT	2301.3	2301	2301	MAINLINE AND EXIT RAMP
12, 13	655+70.00	659+34.27	I-270	EASTBOUND	RT	1619	1619	1619	MAINLINE
13	662+03.02	666+20.00	I-270	WESTBOUND	LT	1853.2	1853	1853	MAINLINE
13	662+03.02	666+20.00	I-270	EASTBOUND	RT	1853.2	1853	1853	MAINLINE
					SUBTOTAL	14618.6	14618	14618	
					ALT. K, L SUBTOTAL	0	14725	14725	
					PAY TOTAL	14618.6	29343	29343	

SUMMARY OF QUANTITIES
SHEET 5 OF 19

STATE OF MISSOURI
EUGENE LOUIS KUEKER JR.
NUMBER PE-2010009912
PROFESSIONAL ENGINEER
THIS SHEET HAS BEEN SIGNED, SEALED, AND DATED ELECTRONICALLY.

DATE PREPARED: 3/25/2026
ROUTE: I-270 | STATE: MO
DISTRICT: SL | SHEET NO.: 3
COUNTY: ST. LOUIS
JOB NO.: JSL0021
CONTRACT ID.:
PROJECT NO.:
BRIDGE NO.:

DESCRIPTION | DATE

IF A SEAL IS PRESENT ON THIS SHEET IT HAS BEEN ELECTRONICALLY SEALED AND DATED.

MISSOURI HIGHWAYS AND TRANSPORTATION COMMISSION
105 WEST CAPITOL
JEFFERSON CITY, MO 65102
1-888-ASK-MODOT (1-888-275-6636)

HDR Engineering, Inc.
1001 Highlands Plaza Drive
Suite 200
St. Louis, MO 63110-1337
314-425-8300
Certificate of Authority: 000856

ALTERNATE K (ASPHALT) - PAVEMENT AND BASE - I-270 SHOULDERS

SHEET NO.	FROM STA	TO STA	ROADWAY	DIRECTION	LOCATION	15.5" HMA SP125BSM (PG 76-22) SY	FURNISHING ROCK BASE (12 INCH) SY	PLACING ROCK (12 INCH) SY	BITUMINOUS SHOULDER RUMBLE STRIP STA	REMARKS
8, 9	598+34.00	605+70.00	I-270	WESTBOUND	LT	981.3	981	981		OUTSIDE SHOULDER
8, 9	601+69.68	605+70.00	I-270	EASTBOUND	RT	622.7	623	623		OUTSIDE SHOULDER
9	605+70.00	606+57.76	I-270	WESTBOUND	LT	78.4	78	78		OUTSIDE SHOULDER
9	605+70.00	609+04.52	I-270	WESTBOUND	LT	108.8	109	109		INSIDE SHOULDER
9	605+70.00	609+04.52	I-270	EASTBOUND	RT	108.8	109	109		INSIDE SHOULDER
9	605+70.00	609+04.52	I-270	EASTBOUND	RT	371.7	372	372		OUTSIDE SHOULDER
9	607+77.35	609+04.52	I-270	WESTBOUND	LT	56.5	57	57		OUTSIDE SHOULDER
9	611+23.02	614+75.00	I-270	WESTBOUND	LT	213.7	214	214		OUTSIDE SHOULDER
9	611+23.02	614+75.00	I-270	WESTBOUND	LT	113.3	113	113		INSIDE SHOULDER
9	611+23.02	614+75.00	I-270	EASTBOUND	RT	113.3	113	113		INSIDE SHOULDER
9	611+23.02	614+75.00	I-270	EASTBOUND	RT	348.0	348	348		OUTSIDE SHOULDER
9, 10	614+75.00	620+11.11	I-270	WESTBOUND	LT	605.5	606	606		OUTSIDE SHOULDER
9, 10	614+75.00	620+52.58	I-270	EASTBOUND	RT	714.2	714	714		OUTSIDE SHOULDER
10, 11	622+47.00	634+75.30	I-270	WESTBOUND	LT	1520.7	1521	1521		OUTSIDE SHOULDER
10, 11, 12	627+56.76	648+00.00	I-270	EASTBOUND	RT	2712.8	2713	2713		OUTSIDE SHOULDER
12	648+40.55	655+70.00	I-270	WESTBOUND	LT	814.7	815	815		OUTSIDE SHOULDER
12	653+28.74	655+70.00	I-270	EASTBOUND	RT	336.6	337	337		OUTSIDE SHOULDER
12, 13	655+70.00	657+23.06	I-270	WESTBOUND	LT	85.1	85	85		OUTSIDE SHOULDER
12, 13	655+70.00	659+34.27	I-270	WESTBOUND	LT	97.2	97	97		INSIDE SHOULDER
12, 13	655+70.00	659+34.27	I-270	EASTBOUND	RT	97.2	97	97		INSIDE SHOULDER
12, 13	655+70.00	659+34.27	I-270	EASTBOUND	RT	404.7	405	405		OUTSIDE SHOULDER
12, 13	657+83.85	659+34.27	I-270	WESTBOUND	LT	61.3	61	61		OUTSIDE SHOULDER
13	662+03.02	666+20.00	I-270	WESTBOUND	LT	463.3	463	463		OUTSIDE SHOULDER
13	662+03.02	666+20.00	I-270	WESTBOUND	LT	112.8	113	113		INSIDE SHOULDER
13	662+03.02	666+20.00	I-270	EASTBOUND	RT	112.8	113	113		OUTSIDE SHOULDER
13	662+03.02	666+20.00	I-270	EASTBOUND	RT	463.3	463	463		INSIDE SHOULDER
13	666+20.00	667+65.00	I-270	EASTBOUND	RT	194	194	194		OUTSIDE SHOULDER
13, 14, 15	666+20.00	685+98.00	I-270	WESTBOUND	LT	2535	2535	2535		OUTSIDE SHOULDER
13, 14	668+80.00	672+10.00	I-270	EASTBOUND	RT	275.6	276	276		OUTSIDE SHOULDER
8, 9	598+34.00	606+12.83	I-270	WESTBOUND	LT				7.8	OUTSIDE SHOULDER
9	604+70.00	609+20.00	I-270	WESTBOUND	LT				4.5	INSIDE SHOULDER
9	604+70.00	609+20.00	I-270	EASTBOUND	RT				4.5	INSIDE SHOULDER
9	601+69.68	609+20.00	I-270	EASTBOUND	RT				7.5	OUTSIDE SHOULDER
9	607+58.68	609+20.00	I-270	WESTBOUND	LT				1.6	OUTSIDE SHOULDER
9, 10	611+08.02	620+11.11	I-270	WESTBOUND	LT				9.0	OUTSIDE SHOULDER
9	611+08.02	615+75.00	I-270	WESTBOUND	LT				4.7	INSIDE SHOULDER
9, 10	611+08.02	620+52.73	I-270	EASTBOUND	RT				9.4	OUTSIDE SHOULDER
9	611+08.02	615+75.00	I-270	EASTBOUND	RT				4.7	INSIDE SHOULDER
10, 11	622+47.00	634+75.30	I-270	WESTBOUND	LT				12.3	OUTSIDE SHOULDER
10, 11, 12	627+56.76	648+00.00	I-270	EASTBOUND	RT				20.4	OUTSIDE SHOULDER
12, 13	648+40.55	657+88.80	I-270	WESTBOUND	LT				9.5	OUTSIDE SHOULDER
12, 13	653+28.74	659+57.04	I-270	EASTBOUND	RT				6.3	OUTSIDE SHOULDER
12, 13	654+70.00	659+53.20	I-270	WESTBOUND	LT				4.8	INSIDE SHOULDER
12, 13	654+70.00	659+54.10	I-270	EASTBOUND	RT				4.8	INSIDE SHOULDER
13, 14, 15	661+80.26	685+98.00	I-270	WESTBOUND	LT				24.2	OUTSIDE SHOULDER
13	661+83.21	667+20.00	I-270	WESTBOUND	LT				5.4	INSIDE SHOULDER
13	661+84.04	667+20.00	I-270	EASTBOUND	RT				5.4	INSIDE SHOULDER
13	661+87.04	667+65.00	I-270	EASTBOUND	RT				5.8	OUTSIDE SHOULDER
13, 14	668+80.00	672+10.00	I-270	EASTBOUND	RT				3.3	OUTSIDE SHOULDER
					SUBTOTAL	14723.3	14725	14725	155.9	
					PAY TOTAL	14723.3			155.9	

SUMMARY OF QUANTITIES
SHEET 6 OF 19

STATE OF MISSOURI
EUGENE LOUIS KUEKER JR.
NUMBER PE-2011000912
PROFESSIONAL ENGINEER

THIS SHEET HAS BEEN SIGNED, SEALED, AND DATED ELECTRONICALLY.

DATE PREPARED: 3/25/2026
ROUTE: I-270 | STATE: MO
DISTRICT: SL | SHEET NO.: 3
COUNTY: ST. LOUIS
JOB NO.: JSL0021
CONTRACT ID.:
PROJECT NO.:
BRIDGE NO.:

DESCRIPTION | DATE

MISSOURI HIGHWAYS AND TRANSPORTATION COMMISSION
105 WEST CAPITOL
JEFFERSON CITY, MO 65102
1-888-ASK-MODOT (1-888-275-6636)

HDR Engineering, Inc.
1001 Highlands Plaza Drive
Suite 200
St. Louis, MO 63110-1337
314-425-8300
Certificate of Authority: 000856

IF A SEAL IS PRESENT ON THIS SHEET IT HAS BEEN ELECTRONICALLY SEALED AND DATED.

ALTERNATE L (CONCRETE) - PAVEMENT AND BASE - I-270 SHOULDERS

SHEET NO.	FROM STA	TO STA	ROADWAY	DIRECTION	LOCATION	11" PCCP SY	FURNISHING ROCK BASE (12 INCH) SY	PLACING ROCK (12 INCH) SY	PORTLAND CEMENT CONCRETE SHOULDER RUMBLE STRIP STA	REMARKS
8, 9	598+34.00	605+70.00	I-270	WESTBOUND	LT	981.3	981	981		OUTSIDE SHOULDER
8, 9	601+69.68	605+70.00	I-270	EASTBOUND	RT	622.7	623	623		OUTSIDE SHOULDER
9	605+70.00	606+57.76	I-270	WESTBOUND	LT	78.4	78	78		OUTSIDE SHOULDER
9	605+70.00	609+04.52	I-270	WESTBOUND	LT	108.8	109	109		INSIDE SHOULDER
9	605+70.00	609+04.52	I-270	EASTBOUND	RT	108.8	109	109		INSIDE SHOULDER
9	605+70.00	609+04.52	I-270	EASTBOUND	RT	371.7	372	372		OUTSIDE SHOULDER
9	607+77.35	609+04.52	I-270	WESTBOUND	LT	56.5	57	57		OUTSIDE SHOULDER
9	611+23.02	614+75.00	I-270	WESTBOUND	LT	213.7	214	214		OUTSIDE SHOULDER
9	611+23.02	614+75.00	I-270	WESTBOUND	LT	113.3	113	113		INSIDE SHOULDER
9	611+23.02	614+75.00	I-270	EASTBOUND	RT	113.3	113	113		INSIDE SHOULDER
9	611+23.02	614+75.00	I-270	EASTBOUND	RT	348.0	348	348		OUTSIDE SHOULDER
9, 10	614+75.00	620+11.11	I-270	WESTBOUND	LT	605.5	606	606		OUTSIDE SHOULDER
9, 10	614+75.00	620+52.58	I-270	EASTBOUND	RT	714.2	714	714		OUTSIDE SHOULDER
10, 11	622+47.00	634+75.30	I-270	WESTBOUND	LT	1520.7	1521	1521		OUTSIDE SHOULDER
10, 11, 12	627+56.76	648+00.00	I-270	EASTBOUND	RT	2712.8	2713	2713		OUTSIDE SHOULDER
12	648+40.55	655+70.00	I-270	WESTBOUND	LT	814.7	815	815		OUTSIDE SHOULDER
12	653+28.74	655+70.00	I-270	EASTBOUND	RT	336.6	337	337		OUTSIDE SHOULDER
12, 13	655+70.00	657+23.06	I-270	WESTBOUND	LT	85.1	85	85		OUTSIDE SHOULDER
12, 13	655+70.00	659+34.27	I-270	WESTBOUND	LT	97.2	97	97		INSIDE SHOULDER
12, 13	655+70.00	659+34.27	I-270	EASTBOUND	RT	97.2	97	97		INSIDE SHOULDER
12, 13	655+70.00	659+34.27	I-270	EASTBOUND	RT	404.7	405	405		OUTSIDE SHOULDER
12, 13	657+83.85	659+34.27	I-270	WESTBOUND	LT	61.3	61	61		OUTSIDE SHOULDER
13	662+03.02	666+20.00	I-270	WESTBOUND	LT	463.3	463	463		OUTSIDE SHOULDER
13	662+03.02	666+20.00	I-270	WESTBOUND	LT	112.8	113	113		INSIDE SHOULDER
13	662+03.02	666+20.00	I-270	EASTBOUND	RT	112.8	113	113		OUTSIDE SHOULDER
13	662+03.02	666+20.00	I-270	EASTBOUND	RT	463.3	463	463		INSIDE SHOULDER
13	666+20.00	667+65.00	I-270	EASTBOUND	RT	194	194	194		OUTSIDE SHOULDER
13, 14, 15	666+20.00	685+98.00	I-270	WESTBOUND	LT	2535	2535	2535		OUTSIDE SHOULDER
13, 14	668+80.00	672+10.00	I-270	EASTBOUND	RT	275.6	276	276		OUTSIDE SHOULDER
8, 9	598+34.00	606+12.83	I-270	WESTBOUND	LT				7.8	OUTSIDE SHOULDER
9	604+70.00	609+20.00	I-270	WESTBOUND	LT				4.5	INSIDE SHOULDER
9	604+70.00	609+20.00	I-270	EASTBOUND	RT				4.5	INSIDE SHOULDER
9	601+69.68	609+20.00	I-270	EASTBOUND	RT				7.5	OUTSIDE SHOULDER
9	607+58.68	609+20.00	I-270	WESTBOUND	LT				1.6	OUTSIDE SHOULDER
9, 10	611+08.02	620+11.11	I-270	WESTBOUND	LT				9.0	OUTSIDE SHOULDER
9	611+08.02	615+75.00	I-270	WESTBOUND	LT				4.7	INSIDE SHOULDER
9, 10	611+08.02	620+52.73	I-270	EASTBOUND	RT				9.4	OUTSIDE SHOULDER
9	611+08.02	615+75.00	I-270	EASTBOUND	RT				4.7	INSIDE SHOULDER
10, 11	622+47.00	634+75.30	I-270	WESTBOUND	LT				12.3	OUTSIDE SHOULDER
10, 11, 12	627+56.76	648+00.00	I-270	EASTBOUND	RT				20.4	OUTSIDE SHOULDER
12, 13	648+40.55	657+88.80	I-270	WESTBOUND	LT				9.5	OUTSIDE SHOULDER
12, 13	653+28.74	659+57.04	I-270	EASTBOUND	RT				6.3	OUTSIDE SHOULDER
12, 13	654+70.00	659+53.20	I-270	WESTBOUND	LT				4.8	INSIDE SHOULDER
12, 13	654+70.00	659+54.10	I-270	EASTBOUND	RT				4.8	INSIDE SHOULDER
13, 14, 15	661+80.26	685+98.00	I-270	WESTBOUND	LT				24.2	OUTSIDE SHOULDER
13	661+83.21	667+20.00	I-270	WESTBOUND	LT				5.4	INSIDE SHOULDER
13	661+84.04	667+20.00	I-270	EASTBOUND	RT				5.4	INSIDE SHOULDER
13	661+87.04	667+65.00	I-270	EASTBOUND	RT				5.8	OUTSIDE SHOULDER
13, 14	668+80.00	672+10.00	I-270	EASTBOUND	RT				3.3	OUTSIDE SHOULDER
					SUBTOTAL	14723.3	14725	14725	155.9	
					PAY TOTAL	14723.3			155.9	

SUMMARY OF QUANTITIES
SHEET 7 OF 19

STATE OF MISSOURI
EUGENE LOUIS KUEKER JR.
NUMBER PE-2011000912
PROFESSIONAL ENGINEER
THIS SHEET HAS BEEN SIGNED, SEALED, AND DATED ELECTRONICALLY.

IF A SEAL IS PRESENT ON THIS SHEET IT HAS BEEN ELECTRONICALLY SEALED AND DATED.

DATE PREPARED 3/25/2026

ROUTE	STATE
I-270	MO
DISTRICT	SHEET NO.
SL	3

COUNTY: ST. LOUIS
JOB NO.: JSL0021
CONTRACT ID.:
PROJECT NO.:
BRIDGE NO.:

DESCRIPTION	DATE

MISSOURI HIGHWAYS AND TRANSPORTATION COMMISSION
105 WEST CAPITOL
JEFFERSON CITY, MO 65102
1-888-ASK-MODOT (1-888-275-6636)

HDR Engineering, Inc.
1001 Highlands Plaza Drive
Suite 200
St. Louis, MO 63110-1337
314-425-8300
Certificate of Authority: 000856

ALTERNATE M (ASPHALT) - PAVEMENT AND BASE - BELLEFONTAINE RD							
SHEET NO.	FROM STA	TO STA	ROADWAY	DIRECTION	LOCATION	9.5" HMA BP-1 (PG 64-22) SY	6" TYPE 5 AGGREGATE BASE SY
17	12+05.78	14+54.19	BELLEFONTAINE RD	NORTHBOUND	LT	591.8	592
17	12+37.10	14+41.52	BELLEFONTAINE RD	SOUTHBOUND	RT	109.3	109
					SUBTOTAL	701.1	701
					ALT. O, P SUBTOTAL	0	3913
					PAY TOTAL	701.1	4614

ALTERNATE N (CONCRETE) - PAVEMENT AND BASE - BELLEFONTAINE RD							
SHEET NO.	FROM STA	TO STA	ROADWAY	DIRECTION	LOCATION	9.5" PCCP SY	6" TYPE 5 AGGREGATE BASE SY
17	12+05.78	14+54.19	BELLEFONTAINE RD	NORTHBOUND	LT	591.8	592
17	12+37.10	14+41.52	BELLEFONTAINE RD	SOUTHBOUND	RT	109.3	109
					SUBTOTAL	701.1	701
					ALT. O, P SUBTOTAL	0	3913
					PAY TOTAL	701.1	4614

SUMMARY OF QUANTITIES
SHEET 8 OF 19

STATE OF MISSOURI
EUGENE LOUIS KUEKER JR.
NUMBER PE-2011009912
PROFESSIONAL ENGINEER

THIS SHEET HAS BEEN SIGNED, SEALED, AND DATED ELECTRONICALLY.

IF A SEAL IS PRESENT ON THIS SHEET IT HAS BEEN ELECTRONICALLY SEALED AND DATED.

DATE PREPARED
3/25/2026

ROUTE	STATE
I-270	MO
DISTRICT	SHEET NO.
SL	3

COUNTY
ST. LOUIS

JOB NO.
JSL0021

CONTRACT ID.

PROJECT NO.

BRIDGE NO.

DESCRIPTION	DATE

MISSOURI HIGHWAYS AND TRANSPORTATION COMMISSION

105 WEST CAPITOL
JEFFERSON CITY, MO 65102
1-888-ASK-MODOT (1-888-275-6636)

HDR Engineering, Inc.
1001 Highlands Plaza Drive
Suite 200
St. Louis, MO 63110-1337
314-425-8300
Certificate of Authority: 000856

ALTERNATE O (ASPHALT) - PAVEMENT AND BASE - MO 367 AND RAMP 8-D (I-270/MO 367)

SHEET NO.	FROM STA	TO STA	ROADWAY	DIRECTION	LOCATION	10.5" HMA SP125CLP (PG 70-22) SY	6" TYPE 5 AGGREGATE BASE SY	REMARKS
16	1+32.05	3+42.00	RAMP 8-D		RT/LT	961.2	961	ALL
16	3+42.00	7+67.00	RAMP 8-D		RT	352.8	353	RIGHT SHOULDER
16	7+67.00	9+32.08	RAMP 8-D		RT/LT	668.6	669	ALL
16	521+53.00	532+41.00	MO 367	SOUTHBOUND	RT	1809.8	1810	OUTSIDE LANE AND SHOULDER
16	524+59.00	526+70.00	MO 367	SOUTHBOUND	LT	60.4	60	INSIDE SHOULDER
16	524+59.00	526+70.00	MO 367	NORTHBOUND	LT	60.3	60	INSIDE SHOULDER
					SUBTOTAL	3913.1	3913	
					PAY TOTAL	3913.1		

ALTERNATE P (CONCRETE) - PAVEMENT AND BASE - MO 367 AND RAMP 8-D (I-270/MO 367)

SHEET NO.	FROM STA	TO STA	ROADWAY	DIRECTION	LOCATION	10.5" PCCP SY	6" TYPE 5 AGGREGATE BASE SY	REMARKS
16	1+32.05	3+42.00	RAMP 8-D		RT/LT	961.2	961	ALL
16	3+42.00	7+67.00	RAMP 8-D		RT	352.8	353	RIGHT SHOULDER
16	7+67.00	9+32.08	RAMP 8-D		RT/LT	668.6	669	ALL
16	521+53.00	532+41.00	MO 367	SOUTHBOUND	RT	1809.8	1810	OUTSIDE LANE AND SHOULDER
16	524+59.00	526+70.00	MO 367	SOUTHBOUND	LT	60.4	60	INSIDE SHOULDER
16	524+59.00	526+70.00	MO 367	NORTHBOUND	LT	60.3	60	INSIDE SHOULDER
					SUBTOTAL	3913.1	3913	
					PAY TOTAL	3913.1		

PAVEMENT REPAIR

SHEET NO.	STA	ROADWAY	LOC.	NUMBER AND SIZE OF PAVEMENT REPAIR	FURNISHING & PLACING CONCRETE MATERIAL FOR FULL DEPTH PVM'T. REPAIR SY	SUBGRADE COMPACTION (6 IN. DEPTH) (PVM'T. REPAIR) SY	TYPE 1 OR 5 AGGR. FOR BASE (4 IN. THICK) (PVM'T. REPAIR) SY	FULL DEPTH PVM'T. REPAIR SAW CUT (FOR PERIMETER & INTERNAL SAW CUTS) LF	DOWEL BAR (DRILLING, FURNISHING, & INSTALLATION FOR FULL DEPTH PVM'T. REPAIR EA	DOWEL BAR (FURNISHING & INSTALLATION WITH BASKETS) FOR FULL DEPTH PVM'T. REPAIR EA	REMARKS
N/A	600+14.00	I-270	LT	1 EA @ 12' x 6'	97.5	98	98	36	20		WB LANE 2
N/A	602+50.00	I-270	LT	1 EA @ 24' x 12'	87.5	88	88	72	20	10	WB LANE 2
N/A	609+00.00	I-270	LT	1 EA @ 24' x 12'	97.2	97	97	72	20	10	WB LANE 2
N/A	616+10.00	I-270	LT	1 EA @ 12' x 6'	86.8	87	87	36	20		WB LANE 3
N/A	661+92.00	I-270	LT	1 EA @ 12' x 24'	99.0	99	99	72	40		WB LANES 2-3
N/A	668+70.00	I-270	LT	1 EA @ 12' x 12'	125.0	125	125	48	20		WB LANE 3
N/A	684+70.00	I-270	LT	1 EA @ 24' x 12'	125.0	125	125	72	20	10	WB LANE 2
				SUBTOTAL	718.0	719	719	408	160	30	
				PAY TOTAL	718.0	719	719	408	160	30	

NOTE: THE EXACT LOCATION OF THE PAVEMENT REPAIRS SHALL BE AT THE DIRECTION OF THE ENGINEER.

SUMMARY OF QUANTITIES
SHEET 9 OF 19

STATE OF MISSOURI
EUGENE LOUIS KUEKER JR.
NUMBER PE-2011000912
PROFESSIONAL ENGINEER
THIS SHEET HAS BEEN SIGNED, SEALED, AND DATED ELECTRONICALLY.

DATE PREPARED 3/25/2026
ROUTE I-270 | STATE MO
DISTRICT SL | SHEET NO. 3
COUNTY ST. LOUIS
JOB NO. JSL0021
CONTRACT ID.
PROJECT NO.
BRIDGE NO.

DESCRIPTION | DATE

IF A SEAL IS PRESENT ON THIS SHEET IT HAS BEEN ELECTRONICALLY SEALED AND DATED.

MISSOURI HIGHWAYS AND TRANSPORTATION COMMISSION
105 WEST CAPITOL
JEFFERSON CITY, MO 65102
1-888-ASK-MODOT (1-888-275-6636)

HDR Engineering, Inc.
1001 Highlands Plaza Drive
Suite 200
St. Louis, MO 63110-1337
314-425-8300
Certificate of Authority: 000856

PERMANENT STRIPING

SHEET NO.	ROADWAY	6" WHITE (HBWP) SOLID LF	6" WHITE (HBWP) INTER LF	6" WHITE (HBWP) DOTTED LF	4" WHITE (WB) SOLID LF	4" WHITE (WB) INTER LF	6" YELLOW (HBWP) SOLID LF	4" YELLOW (WB) SOLID LF	12" WHITE (HBWP) SOLID LF	PERFORMED THERMOPLASTIC PAVEMENT MARKING YIELD LINE TRIANGLES EA	24" SOLID WHITE STOP BAR LF	2' X 6' CROSSWALK EA	LEFT/RIGHT ARROW EA
128 - 135	I-270	11932	9420	1046			4710		975				
141	MO 367	615	639						269				
142	BELLEFONTAINE RD				3142	230		1657		12	209	36	5
134	RAMP 8-D	1040					771		278				
132, 133	I-270 WB RAMP TO DUNN RD	485											
	TOTAL LENGTH	14072	10059	1046	3142	230	5481	1657	1522	12	209	36	5
	ADJUSTMENT FACTOR	1	0.25	0.25	1	0.25	1	1	1	1	1	1	1
	SUBTOTAL	14072	2515	262	3142	58	5481	1657	1522	12	209	36	5
	PAY TOTAL	16849			3200		5481	1657	1522	12	209	36	5

HBWP: HIGH BUILD WATERBORNE PAINT WITH TYPE L BEADS
WB: STANDARD WATERBORNE PAINT WITH TYPE P BEADS

DRAINAGE EROSION CONTROL

SHEET NO.	FROM STA	TO STA	ROADWAY	PERIMETER FT (FYI)	AREA SF (FYI)	EROSION CONTROL HEIGHT FT (FYI)	LOC.	TYPE 1 ROCK BLANKET FURN. CY	TYPE 1 ROCK BLANKET PLACING CY	PAVED DITCH SY	SEEDING - COOL SEASON GRASSES ACRE	FURNISHING TYPE 2 ROCK ROCK DITCH LINER CY	PLACING TYPE 2 ROCK DITCH LINER CY	PERMANENT EROSION CONTROL GEOTEXTILE SY	SEPARATION GEOTEXTILE SY	REMARKS
9	609+27.02	609+44.51	I-270	126.8	733.0		RT	54	54					110		
9	610+82.18	611+00.52	I-270	134.2	864.6		RT	64	64					126		
13	655+85.00	660+06.67	I-270	882.7	14046.9		LT	1041	1041					1757		
13	661+12.23	668+50.00	I-270	1563.5	26346.1		LT	1464	1464					3275		
106 - 112	598+34.00	679+45.00	I-270				RT/LT				3.2					
118	521+53.00	532+41.00	MO 367				RT				0.1					
118	523+90.00	524+70.00	MO 367			1.5	RT				0.1					
118	526+30.00	529+50.00	MO 367			1.5	RT					172	172	515		
118	527+00.00	529+40.00	MO 367			1.5	LT				0.1					
16	524+67.37	526+75.72	MO 367 UNDER BRIDGE				RT			266.6						2' FLAT BOTTOM, 2.5' DEPTH, 2:1 SIDE SLOPES
112	0+00.00	10+46.52	RAMP 8-D				RT/LT				0.4					
119	9+77.42	18+49.59	BELLEFONTAINE RD				RT/LT				0.1					
17	12+18.56	13+64.30	I-270 @ BELLEFONTAINE RD				RT			115.4						1' FLAT BOTTOM, 1.5' DEPTH, 2:1 SIDE SLOPES
17	12+35.78	13+64.29	I-270 @ BELLEFONTAINE RD				LT			97.2						1' FLAT BOTTOM, 1.5' DEPTH, 2:1 SIDE SLOPES
16	524+64.21	526+75.60	MSE WALL A9491	396.0	1705.7		RT								278	
16	524+64.45	526+69.48	MSE WALL A9492	379.1	1698.9		LT								273	
						SUBTOTAL		2623	2623	479.2	4.0	172	172	5783	551	
						PAY TOTAL		2623	2623	479.2	4.0	172	172	5783	551	

MILL & OVERLAY

SHEET NO.	FROM STA	TO STA	ROADWAY	LOCATION	AREA SF FYI	COLDMILLING BITUMINOUS PAVEMENT FOR REMOVAL OF SURFACING (3 IN. THICK OR LESS) SY	SP125CLP (PG70-22) TON	2 INCH BP-1 (PG64-22) TON	SP125BSM (PG 76-22) TON	TACK COAT GAL	REMARKS
17	10+86.35	18+49.82	BELLEFONTAINE RD	RT/LT	53795.7	5977	654.1			777	MAINLINE
17	10+86.35	11+41.92	BELLEFONTAINE RD	RT	156.0	17		1.9		2	SHOULDER
17	10+86.35	11+62.70	BELLEFONTAINE RD	LT	259.8	29		3.2		4	SHOULDER
17	11+93.63	12+37.10	BELLEFONTAINE RD	RT	145.5	16		1.8		2	SHOULDER
17	12+05.96	12+11.31	BELLEFONTAINE RD	LT	71.5	8		0.9		1	SHOULDER
17	14+41.52	14+43.38	BELLEFONTAINE RD	RT	87.4	10		1.1		1	SHOULDER
17	14+50.21	14+54.17	BELLEFONTAINE RD	LT	93.6	10		1.1		1	SHOULDER
17	14+74.76	17+79.33	BELLEFONTAINE RD	LT	2516.9	280		31.0		36	SHOULDER
17	14+86.03	18+49.82	BELLEFONTAINE RD	RT	2516.9	280		31.0		36	SHOULDER
16	3+42.00	7+67.00	RAMP 8-D	LT	10842.5	1205	131.9			157	MAINLINE
16	3+42.00	7+67.00	RAMP 8-D	LT	2853.6	317		35.0		41	SHOULDER
9	604+70.00	605+70.00	I-270	LT	4099.3	455			58.4	59	VARIABLE DEPTH
9	604+70.00	605+70.00	I-270	RT	4097.9	455			58.4	59	VARIABLE DEPTH
9	614+75.00	615+75.00	I-270	LT	4100	456			58.4	59	VARIABLE DEPTH
9	614+75.00	615+75.00	I-270	RT	4100	456			58.4	59	VARIABLE DEPTH
12	654+70.00	655+70.00	I-270	LT	4050	450			49.3	59	VARIABLE DEPTH
12	654+70.00	655+70.00	I-270	RT	4050	450			49.3	59	VARIABLE DEPTH
13	666+20.00	667+20.00	I-270	LT	4050	450			49.3	59	VARIABLE DEPTH
13	666+20.00	667+20.00	I-270	RT	4050	450			49.3	59	VARIABLE DEPTH
				SUBTOTAL		11771	786.0	107.0	430.8	1530	
				PAY TOTAL		11771	786.0	107.0	430.8	1530	

SUMMARY OF QUANTITIES
SHEET 10 OF 19

STATE OF MISSOURI
EUGENE LOUIS KUEKER JR.
NUMBER PE-2011000912
PROFESSIONAL ENGINEER

THIS SHEET HAS BEEN SIGNED, SEALED, AND DATED ELECTRONICALLY.

DATE PREPARED 3/25/2026
ROUTE I-270 | STATE MO
DISTRICT SL | SHEET NO. 3
COUNTY ST. LOUIS
JOB NO. JSL0021
CONTRACT ID.
PROJECT NO.
BRIDGE NO.

DESCRIPTION | DATE

IF A SEAL IS PRESENT ON THIS SHEET IT HAS BEEN ELECTRONICALLY SEALED AND DATED.

MISSOURI HIGHWAYS AND TRANSPORTATION COMMISSION
105 WEST CAPITOL
JEFFERSON CITY, MO 65102
1-888-ASK-MODOT (1-888-275-6636)

HDR Engineering, Inc.
1001 Highlands Plaza Drive
Suite 200
St. Louis, MO 63110-1337
314-425-8300
Certificate of Authority: 000856

CONCRETE TRAFFIC BARRIER

SHEET NO.	FROM STA	TO STA	ROADWAY	LOCATION	TYPE 'B' LF	TYPE 'C' LF	TYPE 'C' (MODIFIED) LF	TYPE 'D' LF	TYPE 'D' MODIFIED LF	6 IN. CONCRETE MEDIAN STRIP SY	REMARKS
8, 9	593+96.00	608+30.46	I-270	CL		1434					
9	608+30.46	609+19.98	I-270	CL			90				INCLUDES 50' TRANSITION
9	611+07.48	612+21.03	I-270	CL			114				INCLUDES 50' TRANSITION
9	612+21.03	614+75.00	I-270	CL		254					
11	641+26.20	641+41.20	I-270	RT				15			
12, 13	655+70.00	658+36.90	I-270	CL		267					
13	658+36.90	659+53.73	I-270	CL			117				INCLUDES 50' TRANSITION
13	661+83.58	662+81.88	I-270	CL			98				INCLUDES 50' TRANSITION
13	662+81.88	676+35.00	I-270	CL		1353					
16	524+59.00	526+70.00	MO 367	CL			211				
17	12+09.62	12+37.10	BELLEFONTAINE RD	RT					30		
17	12+37.10	14+04.81	BELLEFONTAINE RD	RT				168			
17	12+07.95	14+52.17	BELLEFONTAINE RD	LT	272						
17	663+54.49	663+64.34	DUNN RD	RT				10			
17	663+64.34	663+66.84	DUNN RD	RT					3		
17	11+27.23	11+58.40	BELLEFONTAINE RD	RT						26.1	ISLAND WALK THROUGH
17	14+74.61	14+92.98	BELLEFONTAINE RD	RT						20.5	ISLAND WALK THROUGH
TC			I-270 POST CONST. XOVER BARRIER REPLACEMENT	CL		1650					
				SUBTOTAL	272	4958	630	193	33	46.6	
				PAY TOTAL	272	4958	630	193	33	46.6	

SIDEWALK

SHEET NO.	FROM STA	TO STA	ROADWAY	LOCATION	CONCRETE SIDEWALK, 4 IN. SY	CONCRETE SIDEWALK, 7 IN. SY	TYPE 5 AGGREGATE FOR BASE (4 IN. THICK) SY	REMARKS
17	10+02.28	11+11.41	BELLEFONTAINE RD	RT	72.8		73	
17	10+56.14	11+18.99	BELLEFONTAINE RD	LT	41.9		42	
17	11+27.23	11+58.40	BELLEFONTAINE RD	RT		41.4	41	ISLAND WALKTHROUGH
17	14+74.73	14+92.96	BELLEFONTAINE RD	RT		25.6	26	ISLAND WALKTHROUGH
17	12+18.47	14+20.11	BELLEFONTAINE RD	RT	134.4		134	
17	15+22.23	18+16.50	BELLEFONTAINE RD	RT	196.2		196	
				SUBTOTAL	445.3	67.0	512	
			TEMP. ASPHALT PAVEMENT TRANS. PATCH SUBTOTAL				2182	
				PAY TOTAL	445.3	67.0	2694	

CONCRETE SLOPE PROTECTION

SHEET NO.	FROM STA	TO STA	ROADWAY	LOCATION	SLOPE PROTECTION SY
9	524+84.27	526+26.32	MO 367 UNDER BRIDGE	RT	65
9	524+84.09	526+27.21	MO 367 UNDER BRIDGE	LT	79
13	659+69.47	660+16.16	I-270 @ BELLEFONTAINE RD	LT/RT	459
13	661+12.24	661+78.67	I-270 @ BELLEFONTAINE RD	LT/RT	576
				SUBTOTAL	1179
				PAY TOTAL	1179

CONCRETE CURB RAMP

SHEET NO.	FROM STA	TO STA	ROADWAY	LOCATION	APPROX. CONC. CURB RAMP AREA (FOR INFO ONLY) SY	CONCRETE CURB RAMP EA	TRUNCATED DOMES SF	REMARKS
17	9+77.71	10+02.28	BELLEFONTAINE RD	RT	14.8	1	21	LARGE RADIUS PERPENDICULAR
17	11+11.41	11+32.05	BELLEFONTAINE RD	RT	19.9	1	13	BLENDED TRANSITION
17	11+18.99	11+46.08	BELLEFONTAINE RD	LT	20.2	1	15	TYPE ONE PARALLEL
17	11+39.22	11+57.52	BELLEFONTAINE RD	RT			36	ISLAND WALKTHROUGH
17	12+02.64	12+18.47	BELLEFONTAINE RD	RT	16.3	1	15	BLENDED TRANSITION
17	14+20.11	14+41.52	BELLEFONTAINE RD	RT	15.2	1	12	SMALL RADIUS PERPENDICULAR
17	14+74.89	14+85.06	BELLEFONTAINE RD	RT			24	ISLAND WALKTHROUGH
17	15+01.85	15+22.23	BELLEFONTAINE RD	RT	18.4	1	14	COMPOUND PERPENDICULAR
17	18+16.50	18+37.55	BELLEFONTAINE RD	RT	17.3	1	12	COMPOUND PERPENDICULAR
				SUBTOTAL	122.1	7	162	
				PAY TOTAL	~~~~~	7	162	

SUMMARY OF QUANTITIES
SHEET 11 OF 19

STATE OF MISSOURI
EUGENE LOUIS KUEKER JR.
NUMBER PE-2010009912
PROFESSIONAL ENGINEER

THIS SHEET HAS BEEN SIGNED, SEALED, AND DATED ELECTRONICALLY.

DATE PREPARED 3/25/2026
ROUTE I-270 | STATE MO
DISTRICT SL | SHEET NO. 3
COUNTY ST. LOUIS
JOB NO. JSL0021
CONTRACT ID.
PROJECT NO.
BRIDGE NO.

DESCRIPTION | DATE

IF A SEAL IS PRESENT ON THIS SHEET IT HAS BEEN ELECTRONICALLY SEALED AND DATED.

MISSOURI HIGHWAYS AND TRANSPORTATION COMMISSION
105 WEST CAPITOL
JEFFERSON CITY, MO 65102
1-888-ASK-MODOT (1-888-275-6636)

HDR Engineering, Inc.
1001 Highlands Plaza Drive
Suite 200
St. Louis, MO 63110-1337
314-425-8300
Certificate of Authority: 000856

CONCRETE APPROACH PAVEMENT

SHEET NO.	FROM STA	TO STA	ROADWAY	LOCATION	CONC. APPROACH PAVEMENT SY	TYPE 5 AGGREGATE FOR BASE (4 IN. THICK) SY
9	609+04.52	609+19.52	I-270 @ MO 367	LT	97.5	98
9	609+05.06	609+20.06	I-270 @ MO 367	RT	87.5	88
9	611+08.02	611+23.02	I-270 @ MO 367	LT	97.2	97
9	611+08.02	611+23.02	I-270 @ MO 367	RT	86.8	87
13	659+34.27	659+53.53	I-270 @ BELLEFONTAINE RD	LT	99.0	99
13	659+34.27	659+58.03	I-270 @ BELLEFONTAINE RD	RT	125.0	125
13	661+79.28	662+03.03	I-270 @ BELLEFONTAINE RD	LT	125.0	125
13	661+83.78	662+03.03	I-270 @ BELLEFONTAINE RD	RT	99.0	99
				SUBTOTAL	817.0	818
				PAY TOTAL	817.0	

NOTE: COST OF FURNISHING AND PLACEMENT OF 4" TYPE 5 AGGREGATE BASE AND 3/4" JOINT FILLER IS INCLUDED IN THE CONTRACT UNIT PRICE FOR CONCRETE APPROACH PAVEMENT.

DELINEATORS

SHEET NO.	STA	ROADWAY	LOCATION	18 IN. WHITE TUBULAR ISLAND MARKER EA	18 IN. YELLOW TUBULAR ISLAND MARKER EA	REMARKS
26	11+21.00	BELLEFONTAINE RD	LT		1	
26	11+21.00	BELLEFONTAINE RD	LT		1	
26	11+22.00	BELLEFONTAINE RD	LT		1	
26	11+29.00	BELLEFONTAINE RD	RT	1		
26	11+55.00	BELLEFONTAINE RD	RT	1		
26	11+56.00	BELLEFONTAINE RD	RT	1		
27	14+76.00	BELLEFONTAINE RD	RT	1		
27	14+77.00	BELLEFONTAINE RD	RT	1		
27	14+91.00	BELLEFONTAINE RD	RT	1		
27	15+02.00	BELLEFONTAINE RD	RT		1	
27	15+03.00	BELLEFONTAINE RD	RT		1	
27	15+03.00	BELLEFONTAINE RD	RT		1	
			SUBTOTAL	6	6	
			PAY TOTAL	6	6	

MODIFIED CURB AND GUTTER

SHEET NO.	FROM STA	TO STA	ROADWAY	LOCATION	MODIFIED CONCRETE GUTTER TYPE B LF	CHAIN-LINK FENCE (RETAINING WALLS) LF	REMARKS
16	524+64.21	526+75.60	MO 367	RT	226	109	MSE WALL NO. A9491
16	524+64.45	526+69.50	MO 367	LT	220	103	MSE WALL NO. A9492
				SUBTOTAL	446	212	
				PAY TOTAL	446	212	

GUARDRAIL

SHEET NO.	FROM STA	TO STA	LOCATION	ROADWAY	MGS GUARDRAIL LF	MGS BRIDGE APPROACH TRANSITION (REGULAR/NO CURB) EA	TYPE A CRASHWORTHY END TERMINAL (MASH) EA	MGS VERTICAL CONCRETE BARRIER TRANSITION EA	MGS END ANCHOR EA	SHAPING SLOPES, CLASS III 100F
9	604+18.62	605+83.50	LT	I-270	112.5		1		1	
9	605+79.00	609+19.49	RT	I-270	262.5	1	1			
9	607+50.00	609+19.49	LT	I-270	125	1			1	
9	611+08.02	614+45.87	LT	I-270	275	1		1		
9	611+08.02	614+40.76	RT	I-270	262.5	1		1		
11	632+41.72	633+88.63	LT	I-270	87.5		1		1	2
11	640+62.22	641+26.22	RT	I-270	100		1	1		1
12	649+31.50	654+92.24	LT	I-270	475		1	1		
12, 13	655+85.00	659+49.27	LT	I-270	337.5	1				
12, 13	653+60.00	659+58.03	RT	I-270	512.5	1	1			2
13, 14	661+79.28	676+60.00	LT	I-270	1400	1	1			
13	661+88.03	666+20.00	RT	I-270	387.5	1			1	
16	523+11.00	526+95.66	RT	MO 367	325		1		1	
16	524+42.02	527+97.48	LT	MO 367	300		1		1	4
17	663+66.84	664+55.42	RT	DUNN RD			1	1		1
				SUBTOTAL	4962.5	8	10	5	6	10
				PAY TOTAL	4963	8	10	5	6	10

NOTE: ALL GRADING FOR MASH CWETs, AS PAID FOR WITH MODIFIED SHAPING SLOPES - CLASS III, SHALL USE ALTERNATE GRADING LIMITS AS SHOWN IN THE STD. PLANS.

SUMMARY OF QUANTITIES
SHEET 12 OF 19

STATE OF MISSOURI
EUGENE LOUIS KUEKER JR.
NUMBER PE-2011000912
PROFESSIONAL ENGINEER
THIS SHEET HAS BEEN SIGNED, SEALED, AND DATED ELECTRONICALLY.

DATE PREPARED 3/25/2026
ROUTE I-270 | STATE MO
DISTRICT SL | SHEET NO. 3
COUNTY ST. LOUIS
JOB NO. JSL0021
CONTRACT ID.
PROJECT NO.
BRIDGE NO.

DESCRIPTION | DATE

IF A SEAL IS PRESENT ON THIS SHEET IT HAS BEEN ELECTRONICALLY SEALED AND DATED.

MISSOURI HIGHWAYS AND TRANSPORTATION COMMISSION
105 WEST CAPITOL
JEFFERSON CITY, MO 65102
1-888-ASK-MODOT (1-888-275-6636)

HDR Engineering, Inc.
1001 Highlands Plaza Drive
Suite 200
St. Louis, MO 63110-1337
314-425-8300
Certificate of Authority: 000856

LIGHTING PULLBOXES

SHEET NO.	ROADWAY	STATION	LOCATION	PULL BOX NO.	PULL BOX, CONCRETE STANDARD EA	PULL BOX, PREFORMED CLASS 1 EA	PULL BOX, PREFORMED CLASS 3 EA	REMARKS
153	EX BELLEFONTAINE RD	11+23.33	59.54' LT	1			1	PB1
153	EX DUNN RD	663+43.53	40.15' RT	2		1		PB2
153	EX BELLEFONTAINE RD	12+57.92	53.81' LT	3		1		PB3
153	EX BELLEFONTAINE RD	11+08.01	53.03' RT	4		1		PB4
153	EX DUNN RD	662+23.33	41.92' RT	5		1		PB5
153	EX RAMP 4	1+00.59	28.45' LT	6		1		PB6
153	EX RAMP 4	0+98.80	11.55' RT	7		1		PB7
153	EX RAMP 4	0+44.18	23.57' RT	8		1		PB8
153	EX RAMP 2	17+18.35	28.38' LT	9		1		PB9
153	EX RAMP 2	17+19.37	31.72' RT	10		1		PB10
153	EX RAMP 2	15+00.00	37.24' RT	11		1		PB11
154	EX I-270	606+16.44	108.28' LT	12		1		PB12
154	EX MO-367	524+90.67	72.20' RT	13		1		PB13
154	EX MO-367	524+91.33	62.13' LT	14		1		PB14
154	EX MO-367	526+89.20	52.58' RT	15	1			PB15
155	EX MO-367	514+73.97	73.96' LT	16		1		PB16
155	EX MO-367	536+08.82	88.57' LT	17		1		PB17
				SUBTOTAL	1	15	1	
				PAY TOTAL	1	15	1	

TOP-MOUNT LIGHT POLES AND LUMINAIRES

SHEET NO.	ROADWAY	STATION	LOCATION	UNDERPASS LUMINAIRE	170W TOP MOUNTED LED-B LU MINAIRE		45 FT TOP MOUNT LIGHT POLE	POLE FOUNDATION (45 FT. OR 13.5 M) MOUNTING HEIGHT	SHAFT LENGTH	CABLE, 10 AWG 1 CONDUCTOR, POLE AND BRACKET	REMARKS
					TYPE 2	TYPE 3					
				EA	EA	EA	EA	EA	FT	LF	
153	DUNN RD	663+82.23	35.73' LT		1		1	1	40	120	A1-1
153	BELLEFONTAINE RD	12+40.92	48.25' LT			1	1	1	40	120	A1-2
153	BELLEFONTAINE RD	12+83.23	57.31' LT	1							WPA1-3
153	BELLEFONTAINE RD	13+36.05	57.31' LT	1							WPA1-4
153	DUNN RD	661+60.72	30.26' RT		1		1	1	40	120	A2-1
153	BELLEFONTAINE RD	10+95.90	51.44' RT			1	1	1	40	120	A2-2
153	BELLEFONTAINE RD	12+75.64	30.87' RT	1							WPA2-3
153	BELLEFONTAINE RD	13+28.49	30.87' RT	1							WPA2-4
153	BELLEFONTAINE RD	15+59.60	33.04' LT			1	1	1	40	120	B1
153	RAMP 4	1+16.19	30.57' LT		1		1	1	40	120	B2
153	BELLEFONTAINE RD	13+81.85	48.25' LT			1	1	1	40	120	B3
153	RAMP 2	17+00.51	28.47' LT			1	1	1	40	120	B4
154	I-270	607+14.38	73.61' LT		1		1	1	40	120	C1
154	MO-367	524+51.39	61.87' RT		1		1	1	40	120	C2
154	MO-367	525+34.50	68.96' RT	1							WP-C1
154	MO-367	525+66.50	69.17' RT	1							WP-C2
154	MO-367	525+98.50	69.38' RT	1							WP-C3
154	MO-367	525+35.35	63.53' LT	1							WP-C4
154	MO-367	525+67.35	63.33' LT	1							WP-C5
154	MO-367	525+99.35	63.12' LT	1							WP-C6
155	MO-367	537+02.81	63.80' RT		1		1	EX	40	120	C3
155	MO-367	251+32.48	213.27' RT		1		1	EX	40	120	D1
155	MO-367	252+60.23	208.98' RT		1		1	EX	40	120	D2
155	MO-367	505+13.53	211.58' RT		1		1	EX	40	120	D3
155	MO-367	515+49.57	84.79' RT		1		1	1	40	120	D4
155	MO-367	513+60.02	62.00' LT		1		1	1	40	120	D5
155	I-270	622+68.00	82.00' LT		1		1	1	40	120	D6
155	I-270	622+39.00	66.87' RT		1		1	1	40	120	D7
155	I-270	638+15.61	72.23' LT		1		1	EX	40	120	D8
155	MO-367	536+50.00	79.00' LT		1		1	1	40	120	D9
			SUBTOTAL	10	15	5	20	15		2,400	
			PAY TOTAL	10	20		20	15		2,400	

SUMMARY OF QUANTITIES
SHEET 13 OF 19

STATE OF MISSOURI
JASON LEE HAYNES
NUMBER PE-2004017183
PROFESSIONAL ENGINEER
THIS SHEET HAS BEEN SIGNED, SEALED, AND DATED ELECTRONICALLY

DATE PREPARED 3/25/2026
ROUTE I-270 | STATE MO
DISTRICT SL | SHEET NO. 3
COUNTY ST. LOUIS
JOB NO. JSL0021
CONTRACT ID.
PROJECT NO.
BRIDGE NO.

DESCRIPTION | DATE

MISSOURI HIGHWAYS AND TRANSPORTATION COMMISSION
105 WEST CAPITOL
JEFFERSON CITY, MO 65102
1-888-ASK-MODOT (1-888-275-6636)

HDR Engineering, Inc.
1001 Highlands Plaza Drive
Suite 200
St. Louis, MO 63110-1337
314-425-8300
Certificate of Authority: 000856

IF A SEAL IS PRESENT ON THIS SHEET IT HAS BEEN ELECTRONICALLY SEALED AND DATED.

LIGHTING CONDUIT

SHEET NO.	FROM	TO	LOCATION	CIRCUIT	CENTER TO CENTER DISTANCE LF	CONDUIT, 2 IN. RIGID, EXTERNAL ON STRUCTURE LF	CONDUIT, 3 IN. RIGID, PUSHED LF	CONDUIT, 4 IN. RIGID IN TRENCH LF	CABLE-CONDUIT, 1 IN., 2 CONDUCTORS AND 1 BARE NEUTRAL, 8 AWG LF	CABLE, 8 AWG 1 CONDUCTOR LF	TRENCHING TYPE I LF	REMARKS
153	LIGHTING CONTROLLER A	PULL BOX 1	BELLEFONTAINE & DUNN	A1, A2	15			18	52		15	2 CIRCUITS IN 4" RIGID CONDUIT
153	PULL BOX 1	LUMINAIRE A1-1	BELLEFONTAINE & DUNN	A1	56				64		56	
153	PULL BOX 1	PULL BOX 2	BELLEFONTAINE & DUNN	A1	98		96		104			CABLE-CONDUIT IN RIGID CONDUIT
153	PULL BOX 2	LUMINAIRE A1-2	BELLEFONTAINE & DUNN	A1	30				38		30	
153	LUMINAIRE A1-2	PULL BOX 3	BELLEFONTAINE & DUNN	A1	20				28		20	
153	PULL BOX 3	PVC JUNCTION BOX	BELLEFONTAINE & DUNN	A1	45	43				150		RIGID CONDUIT MOUNTED ON STRUCTURE
153	PVC JUNCTION BOX	WALL PACK WPA1-3	BELLEFONTAINE & DUNN	A1	1	1				6		RIGID CONDUIT MOUNTED ON STRUCTURE
153	PVC JUNCTION BOX	WALL PACK WPA1-4	BELLEFONTAINE & DUNN	A1	52	50				168		RIGID CONDUIT MOUNTED ON STRUCTURE
153	PULL BOX 1	PULL BOX 4	BELLEFONTAINE & DUNN	A2	116		114		122			CABLE-CONDUIT IN RIGID CONDUIT
153	PULL BOX 4	LUMINAIRE A2-1	BELLEFONTAINE & DUNN	A2	68				76		68	
153	PULL BOX 4	PULL BOX 5	BELLEFONTAINE & DUNN	A2	104		102		110			CABLE-CONDUIT IN RIGID CONDUIT
153	PULL BOX 5	LUMINAIRE A2-2	BELLEFONTAINE & DUNN	A2	70				78		70	
153	PULL BOX 5	PVC JUNCTION BOX	BELLEFONTAINE & DUNN	A2	83	83				264		RIGID CONDUIT MOUNTED ON STRUCTURE
153	PVC JUNCTION BOX	WALL PACK WPA2-3	BELLEFONTAINE & DUNN	A2	1					6		RIGID CONDUIT MOUNTED ON STRUCTURE
153	PVC JUNCTION BOX	WALL PACK WPA2-4	BELLEFONTAINE & DUNN	A2	52	52				168		RIGID CONDUIT MOUNTED ON STRUCTURE
153	EX PULL BOX	LUMINAIRE B1	BELLEFONTAINE & I-270 EB RAMPS	B	26				34		26	
153	LUMINAIRE B1	PULL BOX 8	BELLEFONTAINE & I-270 EB RAMPS	B	63				71		63	
153	PULL BOX 8	PULL BOX 10	BELLEFONTAINE & I-270 EB RAMPS	B	132		130		138			CABLE-CONDUIT IN RIGID CONDUIT
153	PULL BOX 10	PULL BOX 11	BELLEFONTAINE & I-270 EB RAMPS	B	221				227		221	
153	PULL BOX 10	PULL BOX 9	BELLEFONTAINE & I-270 EB RAMPS	B	62		60		68			CABLE-CONDUIT IN RIGID CONDUIT
153	PULL BOX 9	LUMINAIRE B4	BELLEFONTAINE & I-270 EB RAMPS	B	20				28		20	
153	PULL BOX 8	PULL BOX 7	BELLEFONTAINE & I-270 EB RAMPS	B	60				66		60	
153	PULL BOX 7	PULL BOX 6	BELLEFONTAINE & I-270 EB RAMPS	B	38		36		44			CABLE-CONDUIT IN RIGID CONDUIT
153	PULL BOX 6	LUMINAIRE B2	BELLEFONTAINE & I-270 EB RAMPS	B	18				26		18	
153	PULL BOX 6	LUMINAIRE B3	BELLEFONTAINE & I-270 EB RAMPS	B	104				112		104	
154	PB12	LUMINAIRE C1	MO-367 & I-270	C	106				114		106	
154	LUMINAIRE C1	LUMINAIRE C2	MO-367 & I-270	C	245				253		245	
154	LUMINAIRE C2	PULL BOX 13	MO-367 & I-270	C	41				49		41	
154	PULL BOX 13	PVC JUNCTION BOX	MO-367 & I-270	C	58	58				189		RIGID CONDUIT MOUNTED ON STRUCTURE
154	PVC JUNCTION BOX	WALL PACK WP-C1	MO-367 & I-270	C	1					6		RIGID CONDUIT MOUNTED ON STRUCTURE
154	WALL PACK WP-C1	WALL PACK WP-C2	MO-367 & I-270	C	32	32				108		RIGID CONDUIT MOUNTED ON STRUCTURE
154	WALL PACK WP-C2	WALL PACK WP-C3	MO-367 & I-270	C	32	32				108		RIGID CONDUIT MOUNTED ON STRUCTURE
154	WALL PACK WP-C3	RELOCATED EX1	MO-367 & I-270	C	87	95				282		RIGID CONDUIT MOUNTED ON STRUCTURE
154	RELOCATED EX1	PULL BOX 15	MO-367 & I-270	C	23				31			
154	PULL BOX 13	PULL BOX 14	MO-367 & I-270	C	135		133		141			CABLE-CONDUIT IN RIGID CONDUIT
154	PULL BOX 14	PVC JUNCTION BOX	MO-367 & I-270	C	58	58				189		RIGID CONDUIT MOUNTED ON STRUCTURE
154	PVC JUNCTION BOX	WALL PACK WP-C4	MO-367 & I-270	C	1					6		RIGID CONDUIT MOUNTED ON STRUCTURE
154	WALL PACK WP-C4	WALL PACK WP-C5	MO-367 & I-270	C	32	32				108		RIGID CONDUIT MOUNTED ON STRUCTURE
154	WALL PACK WP-C5	WALL PACK WP-C6	MO-367 & I-270	C	32	32				108		RIGID CONDUIT MOUNTED ON STRUCTURE
155	PB17	LUMINAIRE D9	MO-367 & I-270	D	45				53		45	
155	PB16	LUMINAIRE D5	MO-367 & I-270	D	114				122		114	
155	EX PB	LUMINAIRE D6	MO-367 & I-270	D	270				278		270	
				SUBTOTAL		568	671	18	2,527	1,866	1,592	
				PLUS 5% FOR SNAKING		28	34	1	126	93		
				TOTAL		596	705	19	2,653	1,959	1,592	
				PAY TOTAL		596	705	19	2,660	1,960	1,592	

MISCELLANEOUS TRAFFIC SIGNALS

ITEM NO.	DESCRIPTION	UNIT	QUANTITY	REMARKS
9029400	TEMPORARY TRAFFIC SIGNALS	LS	1	SEE JSPs
9029901	MISC., TRAFFIC SIGNAL MAINTENANCE & PROGRAMMING	LS	1	SEE JSPs
9029902	MISC., TEMPORARY GENERATOR FOR SIGNAL POWER	EA	2	SEE JSPs
9029902	MISC., AUDIBLE PEDESTRIAN PUSHBUTTONS AND SIGNING	EA	6	SEE JSPs AND SIGNAL SHEETS
9029902	MISC., ATC TRAFFIC SIGNAL CONTROLLER	EA	2	SEE JSPs AND SIGNAL SHEETS
9029902	MISC., COUNTDOWN PEDESTRIAN SIGNAL HEAD, TYPE 1S	EA	6	SEE JSPs AND SIGNAL SHEETS
9029902	MISC., NETWORK CONNECTED SIGNAL MONITOR	EA	2	SEE JSPs
9029902	MISC., PAD MNT 120V/240V SIGNAL PS & LIGHTING CONTROLLER W/UPS	EA	1	SEE JSPs AND SIGNAL SHEETS
9029903	MISC., CAT-5E/CAT-6 ETHERNET CABLE	LF	250	SEE JSPs AND SIGNAL SHEETS
9109902	MISC., INSTALL CCTV CAMERA ASSEMBLY	EA	1	SEE JSPs AND SIGNAL SHEETS

SUMMARY OF QUANTITIES
SHEET 14 OF 19

STATE OF MISSOURI
JASON LEE HAYNES
NUMBER PE-2004017183
PROFESSIONAL ENGINEER
THIS SHEET HAS BEEN SIGNED, SEALED, AND DATED ELECTRONICALLY

IF A SEAL IS PRESENT ON THIS SHEET IT HAS BEEN ELECTRONICALLY SEALED AND DATED.

DATE PREPARED: 3/25/2026
ROUTE: I-270 | STATE: MO
DISTRICT: SL | SHEET NO.: 3
COUNTY: ST. LOUIS
JOB NO.: JSL0021
CONTRACT ID.:
PROJECT NO.:
BRIDGE NO.:

DESCRIPTION	DATE

MISSOURI HIGHWAYS AND TRANSPORTATION COMMISSION
105 WEST CAPITOL
JEFFERSON CITY, MO 65102
1-888-ASK-MODOT (1-888-275-6636)

HDR Engineering, Inc.
1001 Highlands Plaza Drive
Suite 200
St. Louis, MO 63110-1337
314-425-8300
Certificate of Authority: 000856

ITS EQUIPMENT

SHEET NO.	ROADWAY	STATION	LOCATION	PULL BOX, PERFORMED CLASS 2 EA	ITS PULL BOX WITH CONCRETE PAD, PREFORMED CLASS 5 EA	MODOT BURIED CABLE DRIVEABLE POST EA	DRILLED SHAFT (3 FT. 0 IN. DIA) EA	TYPE 7 CABINET EA	RELOCATE EXISTING CCTV CAMERA ASSEMBLY EA	CONDUIT AND PULL BOX INTERCEPTION EA	INSTALLING A COMMISSION FURNISHED AND PROGRAMMED IP ADDRESSABLE POWER STRIP EA	NOTES
143	I-270	661+43	201' RT		1	1						PULL BOX NO. 1
143	I-270	661+33	170' LT		1	1						PULL BOX NO. 2
143	I-270	659+52	160' LT			1				1		EX. PULL BOX NO. 3
143	I-270	658+78	170' LT		1	1						PULL BOX NO. 4
143	I-270	658+72	104' LT		1	1						PULL BOX NO. 5
143	I-270	656+77	97' LT		1	1						PULL BOX NO. 6
143	I-270	656+70	97' LT				1	1	1		1	POLE 1
143	I-270	656+67	105' LT	1		1						PULL BOX NO. 7
143	I-270	658+52	107' LT	1		1						PULL BOX NO. 8
143	I-270	658+55	176' LT	1		1						PULL BOX NO. 9
143	I-270	659+89	197' LT	1		1						PULL BOX NO. 10
143	I-270	661+10	197' LT	1		1						PULL BOX NO. 11
			SUBTOTAL	5	5	11	1	1	1	1	1	
			PAY TOTAL	5	5	11	1	1	1	1	1	

* NOTE: NEW CONCRETE BASE AND FOUNDATION FOR SALVAGED ITS POLE

ITS CONDUIT AND CABLE

SHEET NO.	FROM	TO	CENTER TO CENTER DISTANCE	CONDUIT: RIGID, PUSHED 2 IN. LF	CONDUIT: RIGID, IN TRENCH 2 IN. LF	CABLE: 24 SM FIBER LF	CABLE: 1/c #6 WITH 1/c #6 BARE GROUND LF	REMARKS
143	CONTROLLER	PB 1	10		13	80		
143	PB 1	PB 2	366	365		366		
143	PB 2	CONTROLLER	10		13	80		
143	PB 4	PB 5	65	63		75		
143	PB 5	PB 6	189		188	199		
143	PB 6	POLE 1	10		14	20		
143	POLE 1	PB 7	11		14		17	
143	PB 7	PB 8	185		184		191	
143	PB 8	PB 9	71	70			77	
143	PB 9	PB 10	140	139			146	
143	PB 10	PB 11	116	115			121	
143	PB 11	PWR SUPLY	7	7			15	
		SUBTOTAL		759	426	820	567	
		PAY TOTAL		760	430	820	567	

SUMMARY OF QUANTITIES
SHEET 15 OF 19

STATE OF MISSOURI
TAYLOR C. McHENRY
NUMBER PE-2020006619
PROFESSIONAL ENGINEER

THIS SHEET HAS BEEN SIGNED, SEALED, AND DATED ELECTRONICALLY.

DATE PREPARED: 3/25/2026
ROUTE: I-270 | STATE: MO
DISTRICT: SL | SHEET NO.: 3
COUNTY: ST. LOUIS
JOB NO.: JSL0021
CONTRACT ID.:
PROJECT NO.:
BRIDGE NO.:

DESCRIPTION | DATE

IF A SEAL IS PRESENT ON THIS SHEET IT HAS BEEN ELECTRONICALLY SEALED AND DATED.

MISSOURI HIGHWAYS AND TRANSPORTATION COMMISSION
105 WEST CAPITOL
JEFFERSON CITY, MO 65102
1-888-ASK-MODOT (1-888-275-6636)

HDR Engineering, Inc.
1001 Highlands Plaza Drive
Suite 200
St. Louis, MO 63110-1337
314-425-8300
Certificate of Authority: 000856

FIBER RELATED QUANTITIES

LOCATION	DEVICE ID	WALL-MOUNTED FIBER INTERCONNECT CENTER (EA)	RACK-MOUNTED FIBER INTERCONNECT CENTER (EA)	SM FIBER OPTIC PIGTAIL (EA)	SM FIBER OPTIC JUMPER (EA)	FUSION SPLICE (EA)	INSTALL OR RELOCATE EXISTING COMMUNICATION EQUIPMENT (EA)
BELLEFONTAINE EB RAMP	IS270E033.1	1	0	4	4	28	1
BELLEFONTAINE DUNN	IS270W033.1	1	0	6	6	8	1
CAMERA CABINET	IS270W033.1	0	1	4	4	4	1
	SUB TOTAL	2	1	14	14	40	3
	PAY TOTAL	2	1	14	14	40	3

SUMMARY OF QUANTITIES

SHEET 16 OF 19

STATE OF MISSOURI
CHARLES A. MILLER
NUMBER E-2002000606
REGISTERED PROFESSIONAL ENGINEER

3/23/2026

DATE PREPARED
3/22/2026

ROUTE	STATE
I-270	MO

DISTRICT	SHEET NO.
SL	3

COUNTY
ST. LOUIS

JOB NO.
JSL0021

CONTRACT ID.

PROJECT NO.
-

BRIDGE NO.

DESCRIPTION	DATE

MISSOURI HIGHWAYS AND TRANSPORTATION COMMISSION

105 WEST CAPITOL
JEFFERSON CITY, MO 65102
1-888-ASK-MODOT (1-888-275-6636)

HNTB
715 KIRK DRIVE
KANSAS CITY, MO 64105-1310
CERTIFICATE OF AUTHORITY
NO. 001270

DRAINAGE STRUCTURES																																
					GROUP A PIPE			PRECAST CONCRETE DROP INLETS				PRECAST CONCRETE MANHOLES			MANHOLE FRAME & COVER				CURVED VANE GRATE & FRAME		GRATE & BEARING PLATES			FLARED END SECTION			DRAIN	ATG	CLASS 3 EXCAVATION	ROCK BLANKET	ROCK LINING	PIPE
STRUCTURE ID	TO STRUCTURE ID	ROAD	STATION	OFFSET	12" (FT)	15" (FT)	18" (FT)	2' X 2' (FT)	3' X 2' (FT)	3' X 3' (FT)	4' X 2' (FT)	4' (FT)	5' (FT)	6' (FT)	TYPE 1-A (EACH)	TYPE 1-B (EACH)	TYPE 2 2 (EACH)	TYPE 4 4 (EACH)	2' X 2' (EACH)	4' X 2' (EACH)	3' X 2' (EACH)	3' X 3' (EACH)	5' X 3' (EACH)	12" (EACH)	15" (EACH)	18" (EACH)	BASIN (EACH)	INLET (EACH)	(CY)	(CY)	(CY)	OPENINGS
609A1	609B2	I-270	609+06.54	52.00' RT		49					2.7									1									30.6			1-15"
609B2	609B3	I-270	609+06.33	3.25' RT		7					3.3									1									5.7			2-15"
609B3	609A4	I-270	609+06.32	3.25' LT		55					3.3									1									37.5			2-15"
609A4		I-270	609+06.36	58.00' LT							3.2									1						1			5.1			2-15"
609S1	609M1	I-270	609+50.86	99.66' LT						5.5												1							11.7			2-24"
609M1		I-270	609+59.09	92.11' LT										7.8	1														27.5			2-24", 1-30"
611A1	611A2	I-270	611+20.16	52.00' RT	110						2.7									1									85.1			1-12"
611A2		I-270	611+20.03	58.00' LT							4.9									1									8.6			1-12", 1-18"
614B2	614B1	I-270	614+00.00	3.25' LT		7					2.7									1									7.6			1-15"
614B1	613F1	I-270	614+00.00	3.25' RT		104					2.8									1									108.3			2-15"
613F1		I-270	613+79.24	100.17' RT																					1							2	1-15"
655B1_EX	655B2_EX	I-270	655+53.90	3.25' RT																								1				2-12"
655B2_EX		I-270	655+53.90	3.25' LT																								1				1-12"
657B2	657B1	I-270	657+11.30	3.25' LT	7						2.6									1									6.8			1-12"
657B1	657B3	I-270	657+11.29	3.25' RT							2.7									1									6.6			3-12"
657B4	657B3	I-270	657+61.30	3.25' LT	7						3.2									1									7.0			1-12"
657B3	658B1	I-270	657+61.29	3.25' RT							3.3									1									6.8			3-12"
658B2	658B1	I-270	658+11.30	3.25' LT		7					3.8									1									7.1			1-15"
658B1	658F1	I-270	658+11.31	3.25' RT		99					7.5									1									169.3			1-12", 2-15"
658F1		I-270	658+11.30	98.09' RT																					1								1-15"
661B1		I-270	661+96.62	51.5' RT																							1		10.7			1-12"
661B2		I-270	661+87.86	51.5' LT																							1		9.4			1-12"
664B1	664B2	I-270	664+02.01	3.25' LT	7						2.9									1									6.5			1-12"
664B2		I-270	664+02.01	3.25' RT							3.1									1									5.5			2-12"
10T1_EX		Bellefontaine	10+91.12	44.84' RT																								1				2-12", 1-18"
10T2_EX		Bellefontaine	10+94.38	46.82' LT																								1				2-18"
10T3_EX		Bellefontaine	10+11.55	44.79' RT																								1				2-12"
13C1	13C3	Bellefontaine	13+41.21	29.00' RT		23		3.3											1										23.9			1-15"
13C3	13C5	Bellefontaine	13+64.30	29.00' RT		23		3.4											1										24.0			4-15"
13C5		Bellefontaine	13+87.19	29.00' RT				3.3											1										6.8			1-15"
13C2	13C4	Bellefontaine	13+41.20	42.75' LT		23		4.1											1										21.9			1-15"
13C4	13C6	Bellefontaine	13+64.30	42.75' LT		23		4.2											1										22.1			4-15"
13C6		Bellefontaine	13+87.19	42.75' LT				4.3											1										6.8			1-15"
13S1		Bellefontaine	13+64.30	44.00' RT						2.4												1							5.2			1-15"
13S2		Bellefontaine	13+64.29	49.53' LT						3.7												1							8.8			2-15"
				TOTAL	131	420	0	23	0	12	55	0	0	8	1	0	0	0	6	16	0	3	0	0	2	0	3	5	683	0	2	
				PAY TOTAL	131	420	0	23	0	12	55	0	0	8	1	0	0	0	6	16	0	3	0	0	2	0	3	5	683	0	2	

TRENCH DRAINS			
STATION	TO STATION	ROAD	TRENCH DRAIN (LF)
632+63.73	638+31.01	I-270 CROSSOVER	568
670+56.36	675+50.58	I-270 CROSSOVER	495
	TOTAL		1,063
	PAY TOTAL		1,063

DRAINAGE STRUCTURES
QUANTITIES
SHEET 17 OF 19

STATE OF MISSOURI
DAVID RIECHMANN
NUMBER PE-2011000948
PROFESSIONAL ENGINEER

DATE PREPARED 3/25/2026
ROUTE I-270 | STATE MO
DISTRICT SL | SHEET NO. 3
COUNTY ST. LOUIS
JOB NO. JSL0021
CONTRACT ID.
PROJECT NO.
BRIDGE NO.

IF A SEAL IS PRESENT ON THIS SHEET IT HAS BEEN ELECTRONICALLY SEALED AND DATED.

DESCRIPTION | DATE

MISSOURI HIGHWAYS AND TRANSPORTATION COMMISSION
105 WEST CAPITOL
JEFFERSON CITY, MO 65102
1-888-ASK-MODOT (1-888-275-6636)

HORNER SHIFRIN
401 S. 18TH ST., STE. 400 ST. LOUIS, MO 63103
314.241.4700 FAX 314.241.4666
WWW.HORNERSHIFRIN.COM
DISCIPLINE: PROFESSIONAL ENGINEERING
CERTIFICATE OF AUTHORITY: 000159
EXPIRATION DATE: DECEMBER 31, 2026

TEMPORARY CONCRETE TRAFFIC BARRIER, IMPACT ATTENUATORS, AND CRASH CUSHIONS

PHASE	SHEET NO.	ROADWAY	OFFSET	TEMPORARY TRAFFIC BARRIER CONTRACTOR FURNISHED/ RETAINED	TEMPORARY TRAFFIC BARRIER ANCHORED CONTRATOR FURNISHED/ RETAINED	TEMPORARY TRAFFIC BARRIER STIFFNESS TRANSITION SECTION CONTRACTOR FURNISHED/ RETAINED	60 MPH IMPACT ATTENUATOR	45 MPH IMPACT ATTENUATOR	REPLACEMENT SAND BARREL	WORK ZONE CRASH CUSHION (NARROW)
				LF	LF	LF	EA	EA	EA	EA
1A	5-6	I-270	RT		305.5	212.5	1		28	
1A	5-11	I-270	LT	287.5	6134.5	1275				
1A	8-9	I-270	RT							1
1A	9	I-270	RT		237.5		1		28	
1A	10	I-270	RT		187.5			1	18	
1B	2-8	I-270	RT	287.5	6691.5	1275				
1B	2-8	I-270	LT		200	425				
2	2-8	I-270	LT		200	425				
2	5 & 7	I-270	LT							2
367 BRIDGE PIER	1 & 2	RTE 367	RT	280						
367 BRIDGE PIER	1 & 2	RTE 367	LT		282					
367 RAMP	1 & 2	RTE 367	LT		1223			1	18	
BELLEFONTAINE BRIDGE	1	BELLEFONTAINE ROAD	LT & RT		689			2	36	
			SUBTOTAL	855	16150.5	3612.5	2	4	128	3
			PAY TOTAL	855	16151	3613	2	4	130	3

COVER EXISTING OVERHEAD SIGN

PHASE	SHEET NO.	ROADWAY	OFFSET	COVER EXISTING OVERHEAD SIGN
				EA
1A	3	I-270	RT	1
1A	5	I-270	RT	2
1A	8	I-270	CENTER	1
1A	9	I-270	RT	2
2	3	I-270	LT	1
2	4	I-270	LT	1
2	7	I-270	LT	1
2	8	I-270	LT	2
			SUBTOTAL	11
			PAY TOTAL	11

TEMPORARY PAVEMENT

PHASE	ROADWAY	STATION	STATION	SIDE	TEMPORARY ASPHALT PAVEMENT TRANSITION PATCH
					SY
1A	I-270	598+64.01	606+09.10	RT/LT	721.9
1A	I-270	632+51.73	636+07.95	RT	392.8
1A	I-270	668+98.45	675+36.44	RT/LT	702.5
2	I-270	632+77.36	636+58.71	RT/LT	365.1
TOTAL					2182.4
PAY TOTAL					2182

TEMPORARY TRAFFIC CONTROL PAVEMENT MARKING

PHASE	ROADWAY	TEMPORARY MARKING PAINT				PAVEMENT MARKING REMOVAL
		4 IN., WHITE			4 IN., YELLOW	
		SOLID	INTERMITTENT	DOTTED	SOLID	
		LF	LF	LF	LF	LF
1A	I-270	32578	18533	4919	20328	61707
1B	I-270	11179	8731	796	14567	28123
2	I-270	16214	11788	200	13321	32532
367 BRIDGE PIER	RTE 367	1495	354	1549	1885	4243
367 RAMP	RTE 367	2004	1541	115	1331	3812
BELLEFONTAINE BRIDGE	BELLEFONTAINE ROAD	1030	239	284	478	1763
	SUBTOTALS	64500	41186	7863	51910	132185
	TOTAL	76770			51910	132190

MISC. WELDING OF GRATES ON DROP INLETS

PHASE	ROADWAY	STATION	OFFSET	MISC. WELDING OF GRATES ON DROP INLETS
				EA
1A	I-270	608+27	RT	1
1A	I-270	608+27	LT	1
1A	I-270	618+65	RT	1
1A	I-270	618+65	LT	1
1A	I-270	625+06	RT	1
1A	I-270	625+06	LT	1
1A	I-270	631+12	RT	1
1A	I-270	631+12	LT	1
1A	I-270	637+54	RT	1
1A	I-270	637+54	LT	1
1A	I-270	641+56	RT	1
1A	I-270	643+87	LT	1
1A	I-270	647+95	LT	1
1A	I-270	651+96	LT	1
1A	I-270	654+96	RT	1
1A	I-270	654+96	LT	1
1A	I-270	657+95	RT	1
1A	I-270	657+95	LT	1
1A	I-270	658+94	RT	1
1A	I-270	658+94	LT	1
1A	I-270	663+43	RT	1
			SUBTOTAL	21
			PAY TOTAL	1 LS

SUMMARY OF QUANTITIES
SHEET 18 OF 19

STATE OF MISSOURI
JONATHAN R. LOOS NUMBER
DATE 20 FEBRUARY 2026
PROFESSIONAL ENGINEER

DATE PREPARED 5/1/2026
ROUTE I-270 | STATE MO
DISTRICT STL | SHEET NO. 3
COUNTY ST. LOUIS
JOB NO. JSL0021
CONTRACT ID. .
PROJECT NO. .
BRIDGE NO. .

DESCRIPTION | DATE

IF A SEAL IS PRESENT ON THIS SHEET IT HAS BEEN ELECTRONICALLY SEALED AND DATED.

MISSOURI HIGHWAYS AND TRANSPORTATION COMMISSION
105 WEST CAPITOL
JEFFERSON CITY, MO 65102
1-888-ASK-MODOT (1-888-275-6636)

HORNER SHIFRIN
401 S. 18TH ST., STE. 400 ST. LOUIS, MO 63103
314.241.1976 FAX 314.241.1988
WWW.HORNERSHIFRIN.COM
DISCIPLINE: PROFESSIONAL ENGINEERING
CERTIFICATE OF AUTHORITY: 000159
EXPIRATION DATE: DECEMBER 31, 2026

SIGN	SIZE IN.	AREA SQ.FT.	QTY EACH	TOTAL AREA SQ.FT.	QTY RELOC EACH	TOTAL RELOC SQ.FT.	SIGN NO.	DESCRIPTION
WARNING SIGNS								
WO1-1L	48X48	16.00						TURN (SYMBOL LEFT)
WO1-1R	48X48	16.00						TURN (SYMBOL RIGHT)
WO1-2L	48X48	16.00						CURVE (SYMBOL LEFT)
WO1-2R	48X48	16.00						CURVE (SYMBOL RIGHT)
WO1-3L	48X48	16.00						REVERSE TURN (SYMBOL LEFT)
WO1-3R	48X48	16.00						REVERSE TURN (SYMBOL RIGHT)
WO1-4L	48X48	16.00						REVERSE CURVE (SYMBOL LEFT)
WO1-4R	48X48	16.00	1	16.00			61R	REVERSE CURVE (SYMBOL RIGHT)
WO1-4bL	48X48	16.00	6	96.00			32L	DOUBLE ARROW REVERSE CURVE (SYMBOL LEFT)
WO1-4bR	48X48	16.00	6	96.00			32R	DOUBLE ARROW REVERSE CURVE (SYMBOL RIGHT)
WO1-4cL	48X48	16.00						TRIPLE ARROW REVERSE CURVE (SYMBOL LEFT)
WO1-4cR	48X48	16.00						TRIPLE ARROW REVERSE CURVE (SYMBOL RIGHT)
WO1-6	60X30	12.50						HORIZONTAL ARROW (SYMBOL)
WO1-6a	72X36	18.00						HORIZ. ARROW (SYMBOL ON PERMANENT BARRICADE)
WO1-7	60X30	12.50						DOUBLE HEAD HORIZONTAL ARROW (SYMBOL)
WO1-7a	72X36	18.00						DOUBLE HEAD HORIZ. ARROW (SYMBOL ON PERM. BARR.)
WO1-8	18X24	3.00						CHEVRON (SYMBOL)
WO1-8a	30X36	7.50						CHEVRON (SYMBOL FOR DIVIDED HIGHWAYS)
WO3-1	48X48	16.00						STOP AHEAD (SYMBOL)
WO3-2	48X48	16.00	1	16.00			40	YIELD AHEAD (SYMBOL)
WO3-3	48X48	16.00						SIGNAL AHEAD (SYMBOL)
WO3-4	48X48	16.00						BE PREPARED TO STOP
WO3-5	48X48	16.00	2	32.00			56	SPEED LIMIT AHEAD
WO4-1L	48X48	16.00						MERGE (SYMBOL FROM LEFT)
WO4-1R	48X48	16.00						MERGE (SYMBOL FROM RIGHT)
WO4-2L	48X48	16.00	2	32.00			6A	MERGE (LEFT)
WO4-2R	48X48	16.00	4	64.00			6B	MERGE (RIGHT)
WO5-1	48X48	16.00	6	96.00			43	ROAD/BRIDGE/RAMP NARROWS
WO5-3	48X48	16.00						ONE LANE BRIDGE
WO5-5	48X48	16.00						NARROW LANES
WO6-1	48X48	16.00						DIVIDED HIGHWAY (SYMBOL)
WO6-2	48X48	16.00						DIVIDED HIGHWAY END (SYMBOL)
WO6-3	48X48	16.00						TWO WAY TRAFFIC (SYMBOL)
WO7-3a	30X24	5.00	2	10.00			44A	NEXT XX MILES (PLAQUE)
WO8-1	48X48	16.00						BUMP
WO8-2	48X48	16.00						DIP
WO8-3	48X48	16.00						PAVEMENT ENDS
WO8-4	48X48	16.00						SOFT SHOULDER
WO8-5	48X48	16.00						SLIPPERY WHEN WET (SYMBOL)
WO8-6	48X48	16.00						TRUCK CROSSING
WO8-6c	48X48	16.00						TRUCK ENTRANCE
WO8-7	36X36	9.00						LOOSE GRAVEL
WO8-7a	36X36	9.00						FRESH OIL / LOOSE GRAVEL
WO8-9	48X48	16.00						LOW SHOULDER
WO8-11	48X48	16.00						UNEVEN LANES
WO8-12	48X48	16.00						NO CENTER LINE
WO8-15	48X48	16.00						GROOVED PAVEMENT
WO8-15P	30X24	5.00	2	10.00			90A	MOTORCYCLE (PLAQUE)
WO8-17L	48X48	16.00						SHOULDER DROP-OFF (SYMBOL LEFT)
WO8-17R	48X48	16.00						SHOULDER DROP-OFF (SYMBOL RIGHT)
WO8-17P	30X24	5.00						SHOULDER DROP-OFF (PLAQUE)
W10-1	42RND.	9.62						RAILROAD CROSSING
WO12-1	24X24	4.00						DOUBLE DOWN ARROW (SYMBOL)
WO12-2	48X48	16.00						LOW CLEARANCE (SYMBOL)
W012-2x	24X18	3.00						LOW CLEARANCE (PLAQUE)
WO12-2a	84X24	14.00						OVERHEAD LOW CLEARANCE (FEET AND INCHES)
WO12-4	120X60	50.00						LOW CLEARANCE XX FT XX IN XX MILES AHEAD
WO12-5	120X60	50.00						WIDTH RESTRICTION XX FT XX IN XX MILES AHEAD
WO13-1	30X30	6.25						ADVISORY SPEED (PLAQUE)
WO16-2	30X24	5.00						XXX FEET (PLAQUE)
WO16-3	30X24	5.00						X MILE (PLAQUE)
WO20-1	48X48	16.00	24	384.00			2	ROAD/BRIDGE/RAMP WORK AHEAD
WO20-2	48X48	16.00	8	128.00			18	DETOUR AHEAD
WO20-3	48X48	16.00	9	144.00			20/20A	ROAD/RAMP CLOSED AHEAD
WO20-4	48X48	16.00						ONE LANE ROAD AHEAD
WO20-5	48X48	16.00	10	160.00			5	RIGHT/CENTER/LEFT LANE CLOSED AHEAD
WO20-5a	48X48	16.00						2 RIGHT/CENTER/LEFT LANES CLOSED AHEAD
WO20-6a	48X48	16.00	4	64.00			6	RIGHT/CENTER/LEFT LANE CLOSED
WO20-7a	48X48	16.00						FLAGGER (SYMBOL)
WO21-2	36X36	9.00						FRESH OIL
WO21-5	48X48	16.00	8	128.00			21	SHOULDER WORK / SHOULDER WORK AHEAD
WO22-1	48X48	16.00						BLASTING ZONE AHEAD
WO22-2	42X36	10.50						TURN OFF 2-WAY RADIO AND PHONE
WO22-3	42X36	10.50						END BLASTING ZONE
GO22-1	21X15	2.19						WET PAINT (ARROW PIVOTS)

SIGN	SIZE IN.	AREA SQ.FT.	QTY EACH	TOTAL SQ.FT.	QTY RELOC EACH	TOTAL RELOC SQ.FT.	SIGN NO.	DESCRIPTION
GUIDE SIGNS								
E05-1	36X48	12.00	1	12.00			49	GORE EXIT
E05-2	48X36	12.00						EXIT OPEN
E05-2a	48X36	12.00	1	12.00			30	EXIT CLOSED
GO20-1	60X24	10.00	2	20.00			1	ROAD WORK NEXT XX MILES
GO20-2	48X24	8.00	2	16.00			26	END ROAD WORK
GO20-4	36X18	4.50						PILOT CAR FOLLOW ME
GO20-4a	42X30	8.75						PILOT CAR IN USE WAIT & FOLLOW
GO20-4a	18X12	1.50						PILOT CAR IN USE WAIT & FOLLOW
GO20-5aP	36X24	6.00	16	96.00			54	WORK ZONE (PLAQUE)
MO4-8a	24X18	3.00	7	21.00			52	END DETOUR
MO4-9L	48X36	12.00						DETOUR (LEFT)
MO4-9R	48X36	12.00						DETOUR (RIGHT)
MO4-9P	48X12	4.00						STREET NAME (PLAQUE)
MO4-10L	48X18	6.00						DETOUR ARROW (LEFT)
MO4-10R	48X18	6.00						DETOUR ARROW (RIGHT)
REGULATORY SIGNS								
R1-1	48X48	13.25						STOP
R1-2	48TRI.	6.93	1	6.93			13	YIELD
R1-2a	36X36	9.00						TO ONCOMING TRAFFIC (PLAQUE)
R1-3P	30X12	2.50						ALL WAY (PLAQUE)
R2-1	36X48	12.00	26	312.00			4/25	SPEED LIMIT XX
R3-1	48X48	16.00						NO RIGHT TURN (SYMBOL)
R3-2	48X48	16.00						NO LEFT TURN (SYMBOL)
R3-3	36X36	9.00						NO TURNS
R3-4	48X48	16.00						NO U-TURN (SYMBOL)
R10-6	24X36	6.00						STOP HERE ON RED (45^ ARROW)
R11-2	48X30	10.00	5	50.00			29	ROAD CLOSED
R11-3a	60X30	12.50						ROAD CLOSED XX MILES AHEAD LOCAL TRAFFIC ONLY
R11-4	60X30	12.50						ROAD CLOSED TO THRU TRAFFIC
CONST-3A	60X48	20.00	2	40.00			53	FINE SIGN
CONST-3X	56X12	4.67						SPEEDING/PASSING (PLATE)
MISCELLANEOUS SIGNS								
CONST-5	96X48	32.00	2	64.00			61	POINT OF PRESENCE
CONST-8	48X36	12.00	2	24.00			60	WORK ZONE NO PHONE ZONE
W4-3R	48X48	16.00	1	16.00			70R	ADDED LANE RIGHT
W4-3L	48X48	16.00	1	16.00			70L	ADDED LANE LEFT
W24-1AR	48X48	16.00	6	96.00			57	DOUBLE REVERSE CURVE
SPECIAL	48X48	16.00	2	32.00			90	RUMBLE STRIPS AHEAD
SPECIAL	96X78	52.00	1	52.00			101	SPECIAL 367 EXIT
SPECIAL	96X78	52.00	1	52.00			102	SPECIAL BELLEFONTAINE EXIT
SPECIAL	72X78	39.00	1	39.00			103	SPECIAL 367 EXIT ARROW
SPECIAL	96X48	32.00	2	64.00			104	SPECIAL SOUTH 367 DETOUR
SPECIAL	90X42	26.25	1	26.25			105	SPECIAL EXIT 32 CLOSED
SPECIAL	96X48	32.00	3	96.00			106	SPECIAL 270 WEST FOLLOW DETOUR
SPECIAL	96X48	32.00	2	64.00			107	SPECIAL 270 EAST FOLLOW DETOUR
SPECIAL	96X54	36.00	1	36.00			108	SPECIAL USE EXIT 33 DETOUR
SPECIAL	96X54	36.00	1	36.00			109	SPECIAL USE EXIT 31A DETOUR
SPECIAL	54X42	15.75	7	110.25			61A	DETOUR BELLEF STRT ARROW
SPECIAL	54X42	15.75	4	63.00			61B	DETOUR BELLEF DIAG ARROW
SPECIAL	54X36	13.50	4	54.00			61C	DETOUR BELLEF RT ARROW
SPECIAL	54X42	15.75	4	63.00			61D	DETOUR BELLEF ST RT ARROW
SPECIAL	54X36	13.50	4	54.00			61E	DETOUR BELLEF LT ARROW
SPECIAL	54X42	15.75	4	63.00			61F	DETOUR BELLEF ST LT ARROW
SPECIAL	36X78	19.50	1	19.50			62A	DETOUR 367 SOUTH STRT ARROW
SPECIAL	36X78	19.50	3	58.50			62B	DETOUR 367 SOUTH DIAG ARROW
SPECIAL	36X78	19.50	2	39.00			62C	DETOUR 367 SOUTH LEFT ARROW
SPECIAL	36X78	19.50	2	39.00			62D	DETOUR 367 SOUTH ST LT ARROW
SPECIAL	36X78	19.50	2	39.00			63A	DETOUR 270 WEST STRT ARROW
SPECIAL	36X78	19.50	1	19.50			63B	DETOUR 270 WEST LEFT ARROW
SPECIAL	36X78	19.50	1	19.50			63C	DETOUR 270 WEST ST LT ARROW
SPECIAL	36X78	19.50	1	19.50			63D	DETOUR 270 WEST RB THRU ARROW
SPECIAL	36X78	19.50	2	39.00			64A	DETOUR 270 EAST STRT ARROW
SPECIAL	36X78	19.50	5	97.50			64B	DETOUR 270 EAST LEFT ARROW
SPECIAL	36X78	19.50	4	78.00			64C	DETOUR 270 EAST ST LT ARROW
SPECIAL	36X78	19.50	5	97.50			64D	DETOUR 270 EAST RIGHT ARROW
SPECIAL	36X78	19.50	4	78.00			64E	DETOUR 270 EAST DIAG ARROW
SPECIAL	36X78	19.50	4	78.00			64G	DETOUR 270 EAST ST RT ARROW
SPECIAL	36X78	19.50	3	58.50			65A	DETOUR 367 NORTH STRT ARROW
SPECIAL	36X78	19.50	4	78.00			65B	DETOUR 367 NORTH DIAG ARROW
SPECIAL	36X78	19.50	3	58.50			65C	DETOUR 367 NORTH LEFT ARROW
SPECIAL	36X78	19.50	2	39.00			65D	DETOUR 367 NORTH ST LT ARROW
SPECIAL	36X78	19.50	5	97.50			65E	DETOUR 367 NORTH RIGHT ARROW
SPECIAL	36X78	19.50	4	78.00			65F	DETOUR 367 NORTH ST RT ARROW

616-10.05 CONSTRUCTION SIGNS	TOTAL	616-10.10 RELOCATED SIGNS	TOTAL
	4314		*

EFFECTIVE: 07-01-2025

ITEM NUMBER	TOTAL QTY	DESCRIPTION
6122008		IMPACT ATTENUATOR 40 MPH (SAND BARRELS)
6122009	(1)**	IMPACT ATTENUATOR 45 MPH (SAND BARRELS)
6122010		IMPACT ATTENUATOR 50 MPH (SAND BARRELS)
6122012		IMPACT ATTENUATOR 55 MPH (SAND BARRELS)
6122014	(1)**	IMPACT ATTENUATOR 60 MPH (SAND BARRELS)
6122017		IMPACT ATTENUATOR 65 MPH (SAND BARRELS)
6122019		IMPACT ATTENUATOR 70 MPH (SAND BARRELS)
6122020	(1)**	REPLACEMENT SAND BARREL
6122030		IMPACT ATTENUATOR (RELOCATION)
6122040		WORK ZONE CRASH CUSHION (NARROW)
6122041	(1)**	WORK ZONE CRASH CUSHION (RELOCATION)
6123001	2	TRUCK MOUNTED ATTENUATOR (TMA)
6139901	(1)**	MISC. WELDING OF GRATES ON DROP INLETS
6161012		BUOYS (BOATS KEEP OUT)
6161013		BUOYS (NO WAKE)
6161014		SPECIAL SIGN ASSEMBLY (BOATS KEEP OUT)
6161020		CHANNELIZER (DRUM-LIKE)
6161022		CHANNELIZER (CONE)
6161025	470	CHANNELIZER (TRIM-LINE)
6161026		CHANNELIZER (VERTICAL PANEL)
6161030	18	TYPE 3 MOVEABLE BARRICADE
6161033	120	DIRECTION INDICATOR BARRICADE
6161040	7	FLASHING ARROW PANEL
6161047		TYPE 3 OBJECT MARKER
6161055		SEQUENTIAL FLASHING WARNING LIGHT
6161070		TUBULAR MARKER
6161095		RADAR SPEED ADVISORY SYSTEM
6161096		CHANGEABLE MESSAGE SIGN, COMMISSION FURNISHED/RETAINED
6161098A	7**	CHANGEABLE MESSAGE SIGN WITHOUT COMM. INTERFACE, CONTRACTOR FURNISHED/RETAINED
6161099		CHANGEABLE MESSAGE SIGN WITH COMM. INTERFACE, CONTRACTOR FURNISHED/RETAINED
6162000A		WORK ZONE TRAFFIC SIGNAL SYSTEM
6162002	14**	TEMPORARY LONG-TERM RUMBLE STRIPS
6173600D	(1)**	TEMPORARY TRAFFIC BARRIER, CONTRACTOR FURNISHED/RETAINED
6173700B	(1)**	TEMP. TRAFFIC BARRIER ANCHORED, CONTRACTOR FURNISHED/RETAINED
6173706	(1)**	TEMP. TRAFFIC BARRIER STIFFNESS TRANSITION CONTRACTOR FURNISHED/RETAINED
6174000A		TEMP. TRAFFIC BARRIER HEIGHT TRANSITION, CONTRACTOR FURNISHED/RETAINED
6175010A		RELOCATING TEMPORARY TRAFFIC BARRIER
6175011B		RELOCATING TEMP. TRAFFIC BARRIER ANCHORED
6175013		RELOCATING TEMP. TRAFFIC BARRIER STIFFNESS
6175020A		RELOCATING TEMP. TRAFFIC BARRIER HEIGHT
6208064A	1313**	TEMPORARY RAISED PAVEMENT MARKER
9029400		TEMPORARY TRAFFIC SIGNALS
9029401		TEMPORARY TRAFFIC SIGNALS AND LIGHTING

TEMPORARY TRAFFIC CONTROL
1 LUMP SUM

* NO DIRECT PAY WILL BE MADE FOR RELOCATION OF CONSTRUCTION SIGNING OR DEVICES

** NOT INCLUDED IN LUMP SUM TEMPORARY TRAFFIC CONTROL

(1) SEE SUMMARY TABLE ON PREVIOUS SHEET

NOTES:
ALL TRAFFIC CONTROL ITEMS INCLUDED IN PAY ITEM 616-99.01 TEMPORARY TRAFFIC CONTROL, LUMP SUM, UNLESS OTHERWISE NOTED IN THE PLANS. THESE QUANTITIES ARE ONLY AN ESTIMATE AND ARE SUBJECT OT CHANGE BASED ON FIELD CONDITIONS.

SIGN QUANTITIES HAVE BEEN ESTIMATED. TEMPORARY TRAFFIC CONTROL SHALL FOLLOW AT A MINIMUM MUTCD STANDARDS, LATEST EDITION.

ALL WARNING SIGNS SHALL HAVE FLUORESCENT SHEETING.

DISCLAIMER

THE PROFESSIONAL WHOSE SIGNATURE AND PERSONAL SEAL APPEAR HEREON ASSUMES RESPONSIBILITY ONLY FOR WHAT APPEARS ON THIS PAGE, AND DISCLAIMS (PURSUANT TO SECTION 327.411 RSMO) SPECIFICATION, ESTIMATES, REPORTS, OR OTHER DOCUMENTS OR INSTRUMENTS NOT SEALED BY THE UNDERSIGNED PROFESSIONAL RELATING TO OR INTENDED TO BE USED FOR ANY PART OR PARTS OF THE PROJECT TO WHICH THIS PAGE REFERS.

SUMMARY OF QUANTITIES
SHEET 19 OF 19

STATE OF MISSOURI ★ PROFESSIONAL ENGINEER ★ JONATHAN R. LOOS NUMBER PE 2017000326

DATE PREPARED 5/1/2026

ROUTE	STATE
I-270	MO
DISTRICT	SHEET NO.
STL	3

COUNTY: ST. LOUIS
JOB NO.: JSL0021
CONTRACT ID.: .
PROJECT NO.: .
BRIDGE NO.: .

DESCRIPTION
DATE

MISSOURI HIGHWAYS AND TRANSPORTATION COMMISSION
105 WEST CAPITOL
JEFFERSON CITY, MO 65102
1-888-ASK-MODOT (1-888-275-6636)
MoDOT

HORNER SHIFRIN
401 S. 18TH ST., STE. 400 ST. LOUIS, MO 63103
314-531-4321 - FAX 314-531-6966
WWW.HORNERSHIFRIN.COM
DISCIPLINE: PROFESSIONAL ENGINEERING
CERTIFICATE OF AUTHORITY: 000159
EXPIRATION DATE: DECEMBER 31, 2026

IF A SEAL IS PRESENT ON THIS SHEET IT HAS BEEN ELECTRONICALLY SEALED AND DATED.

EXIST. I-270	
CURVE_EX_I-270_1	
PI	594+65.79
PC	592+61.59
PT	596+70.00
Δ	0°40'50.4" (LT)
D	0°10'0.0"
L	408.40' (ARC)
T	204.20'
R	34,377.48'

EXIST. MO 367	
CURVE_EX_MO_367	
PI	512+15.53
PC	506+23.03
PT	517+98.67
Δ	17°38'0.0" (LT)
D	1°29'59.6"
L	1,175.64' (ARC)
T	592.51'
R	3,820.00'

BEGIN ℄ EXIST. MO 367 STA 517+00.00

CURVE_EX_MO_367

PT STA 517+98.67 R2

590 595 600 605 610 615 520 525 530 535

5 10 0

PC STA 592+61.59

PT STA 596+70.00

EQUATION:
STA 596+65.33 BK =
STA 596+70.00 AH

S89°13'50"E

CURVE_EX_I-270_1

S89°54'40"E

℄ EXIST. I-270

BEGIN ℄ EXIST. I-270 STA 590+00.00

PCC STA 4+37.88

CURVE_EX_RAMP8D_3

PCC STA 7+83.02

PCC STA 8+29.62

CURVE_EX_RAMP8D_4

CURVE_EX_RAMP8D_5

℄ EXIST. RAMP 8-D

END STA 10+46.52
℄ EXIST. MO 367
STA 523+70.02
45.9' RT

CURVE_EX_RAMP8D_2

CURVE_EX_RAMP8D_1

PCC STA 1+45.85

START STA 0+00.00
℄ EXIST. I-270
STA 607+53.95 R2
55.0' LT

S89°54'40"E

STA 610+16.27 ℄ EXIST. I-270 =
STA 525+67.45 ℄ EXIST. MO 367

℄ EXIST. MO 367

S00°16'46"E

END ℄ EXIST. MO 367 STA 536+00.00

MATCHLINE STA 617+00 EXIST. I-270

EXIST. RAMP 8-D	
CURVE_EX_RAMP8D_1	
PI	0+74.32
PC	0+00.00
PCC	1+45.85
Δ	27°7'56.6" (RT)
D	18°36'9.1"
L	145.85' (ARC)
T	74.32'
R	308.00'

EXIST. RAMP 8-D	
CURVE_EX_RAMP8D_2	
PI	4+90.06
PC	1+45.85
PCC	5+37.88
Δ	124°47'8.2" (RT)
D	31°49'51.6"
L	392.03' (ARC)
T	344.20'
R	180.00'

EXIST. RAMP 8-D	
CURVE_EX_RAMP8D_3	
PI	6+69.62
PC	5+37.88
PCC	7+83.02
Δ	52°1'11.0" (RT)
D	21°13'14.4"
L	245.14' (ARC)
T	131.75'
R	270.00'

EXIST. RAMP 8-D	
CURVE_EX_RAMP8D_4	
PI	8+06.55
PC	7+83.02
PCC	8+29.62
Δ	19°46'42.9" (RT)
D	42°26'28.7"
L	46.60' (ARC)
T	23.54'
R	135.00'

EXIST. RAMP 8-D	
CURVE_EX_RAMP8D_5	
PI	9+44.30
PC	8+29.62
PCC	10+46.52
Δ	46°1'40.3" (RT)
D	21°13'14.4"
L	216.90' (ARC)
T	114.69'
R	270.00'

SCALE
0 100 200 300 400 500

ALIGNMENT DATA
STA 590+00 TO STA 617+00
SHEET 1 OF 4

STATE OF MISSOURI
EUGENE LOUIS KUEKER JR.
NUMBER PE-2010020912
PROFESSIONAL ENGINEER

THIS SHEET HAS BEEN SIGNED, SEALED, AND DATED ELECTRONICALLY.

IF A SEAL IS PRESENT ON THIS SHEET IT HAS BEEN ELECTRONICALLY SEALED AND DATED.

DATE PREPARED: 3/25/2026
ROUTE: I-270 | STATE: MO
DISTRICT: SL | SHEET NO.: 4
COUNTY: ST. LOUIS
JOB NO.: JSL0021
CONTRACT ID.:
PROJECT NO.:
BRIDGE NO.:

DESCRIPTION | DATE

MISSOURI HIGHWAYS AND TRANSPORTATION COMMISSION
105 WEST CAPITOL
JEFFERSON CITY, MO 65102
1-888-ASK-MODOT (1-888-275-6636)

HDR Engineering, Inc.
1001 Highlands Plaza Drive
Suite 200
St. Louis, MO 63110-1337
314-425-8300
Certificate of Authority: 000856

c:\pwworking\central01\d4324513\004_AL01_JSL0021_I100.dgn 2:38:42 PM 3/25/2026

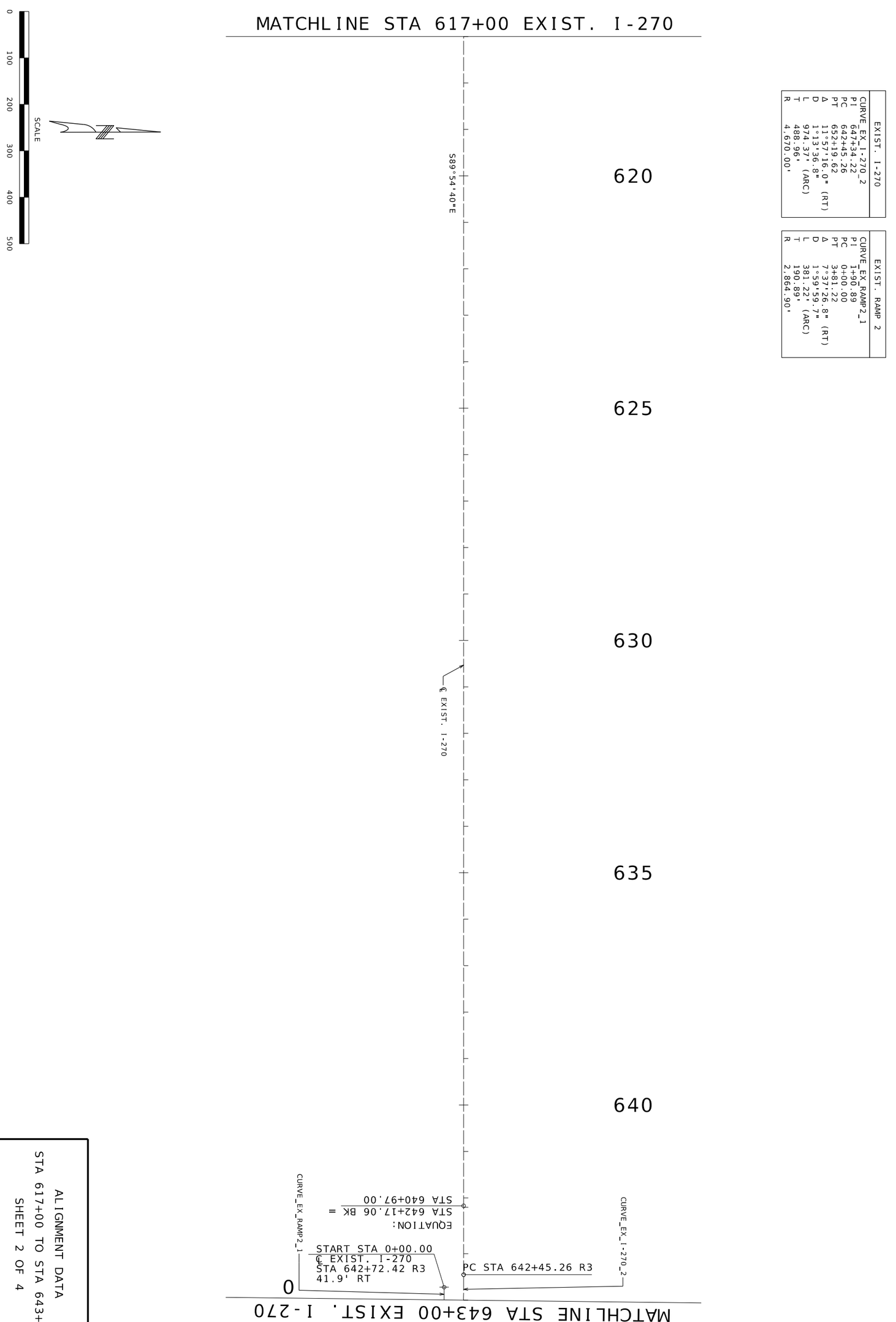

EXIST. I-270	
CURVE_EX_I-270_2	
PI	647+34.22
PC	642+45.26
PT	652+19.62
Δ	11°57'16.0" (RT)
D	1°13'36.8"
L	974.37' (ARC)
T	488.96'
R	4,670.00'

EXIST. RAMP 2	
CURVE_EX_RAMP2_1	
PI	1+90.89
PC	0+00.00
PT	3+81.22
Δ	7°37'26.8" (RT)
D	1°59'59.7"
L	381.22' (ARC)
T	190.89'
R	2,864.90'

ALIGNMENT DATA
STA 617+00 TO STA 643+00
SHEET 2 OF 4

HDR Engineering, Inc.
1001 Highlands Plaza Drive
Suite 200
St. Louis, MO 63110-1337
314-425-8300
Certificate of Authority: 000856

MISSOURI HIGHWAYS AND TRANSPORTATION COMMISSION
105 WEST CAPITOL
JEFFERSON CITY, MO 65102
1-888-ASK-MODOT (1-888-275-6636)

DATE	DESCRIPTION

BRIDGE NO.
PROJECT NO.
CONTRACT ID.
JOB NO. JSL0021
COUNTY ST. LOUIS
SHEET NO. 5
DISTRICT SL
ROUTE I-270
STATE MO
DATE PREPARED 3/25/2026

THIS SHEET HAS BEEN SIGNED, SEALED, AND DATED ELECTRONICALLY.

STATE OF MISSOURI
EUGENE LEE RAMSEY
NUMBER PE-2010009951
PROFESSIONAL ENGINEER

IF A SEAL IS PRESENT ON THIS SHEET IT HAS BEEN ELECTRONICALLY SEALED AND DATED.

c:\pwworking\central01\d4324513\005_AL02_JSL0021_1100.dgn 2:38:49 PM 3/25/2026

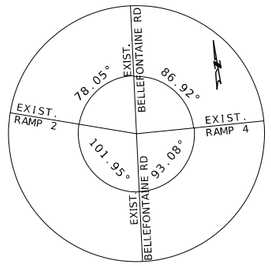

DETAIL A

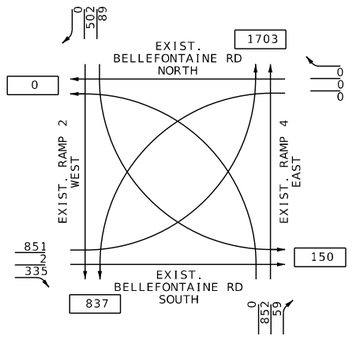

TRAFFIC FLOW DIAGRAM
ESTIMATED - 2046
TRAFFIC VOLUME
TRUCKS - 1.7%

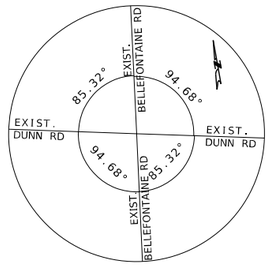

DETAIL B

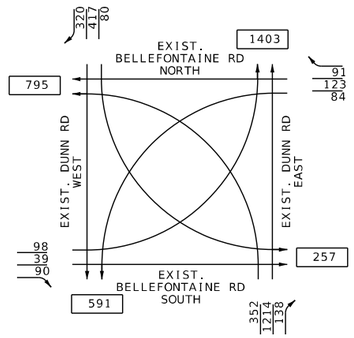

TRAFFIC FLOW DIAGRAM
ESTIMATED - 2046
TRAFFIC VOLUME
TRUCKS - 1.7%

BEGIN ℄ EXIST. BELLEFONTAINE RD
STA 3+00.00

LAND CORNER TIE:
FOUND IRON PIPE AT SOUTH CORNER OF
LOT 3 OF CENTRAL CITY NORTH PLAT 4
PB 369 PG 116
13,796.65 FEET NORTHWEST OF BASELINE STATION 8+00
PROJECT COORDINATES
N:1070368.7540 E:886167.4910

S88°00'30"E
13,796.65
8+00
9+00

FOUND IP AT SOUTH
CORNER of LOT 3 OF
CENTRAL CITY NORTH
PLAT 4
PLAT BK 369 PAGE 116

CURVE_EX_BELLEFONTAINE_RD
℄ EXIST. BELLEFONTAINE RD

BEGIN ℄ EXIST. DUNN RD
STA 657+00.00

PC STA 658+50.17
S68°02'41"E
CURVE_EX_DUNN_RD
℄ EXIST. DUNN RD

PT STA 662+18.20
PT STA 10+78.25
STA 662+76.80 ℄ EXIST. DUNN RD =
STA 11+72.72 ℄ EXIST. BELLEFONTAINE RD
POT STA 665+27.18
S77°57'25"E
END ℄ EXIST. DUNN RD
STA 667+00.00

DETAIL B

℄ EXIST. I-270
S77°57'25"E
STA 660+60.39 ℄ EXIST. I-270 =
STA 13+04.79 ℄ EXIST. BELLEFONTAINE RD

MATCHLINE STA 643+00 EXIST. I-270

CURVE_EX_I-270_2
CURVE_EX_RAMP2_1
S82°15'31"E
CURVE_EX_RAMP2_2
℄ EXIST. RAMP 2
S70°41'14"E
PT STA 3+81.22
PC STA 5+82.60
PT STA 10+55.74
STA 17+98.89 ℄ EXIST. RAMP 2 =
STA 14+79.56 ℄ EXIST. BELLEFONTAINE RD

DETAIL A

END STA 17+98.89
START STA 0+00.00
S07°21'58"W
STA 0+00.00 ℄ EXIST. RAMP 4 =
STA 14+79.56 ℄ EXIST. BELLEFONTAINE RD
CURVE_EX_RAMP4
S85°43'01"E
℄ EXIST. RAMP 4
PC STA 7+79.06

MATCHLINE STA 670+00 EXIST. I-270

SCALE
0 100 200 300 400 500

EXIST. I-270	
CURVE_EX_I-270_2	
PI	647+34.22
PC	642+45.26
PT	652+19.62
Δ	11°57'16.0" (RT)
D	1°13'36.8"
L	974.37' (ARC)
T	488.96'
R	4,670.00'

EXIST. RAMP 4	
CURVE_EX_RAMP4	
PI	8+90.10
PC	7+79.06
PT	10+00.80
Δ	7°45'34.8" (RT)
D	3°29'58.0"
L	221.74' (ARC)
T	111.04'
R	1,637.28'

EXIST. RAMP 2	
CURVE_EX_RAMP2_1	
PI	1+90.89
PC	0+00.00
PT	3+81.22
Δ	7°37'26.8" (RT)
D	1°59'59.7"
L	381.22' (ARC)
T	190.89'
R	2,864.90'

EXIST. RAMP 2	
CURVE_EX_RAMP2_2	
PI	8+19.98
PC	5+82.60
PT	10+55.74
Δ	11°34'17.8" (RT)
D	2°26'44.5"
L	473.14' (ARC)
T	237.38'
R	2,342.71'

EXIST. DUNN RD	
CURVE_EX_DUNN_RD	
PI	660+34.83
PC	658+50.17
PT	662+18.20
Δ	11°42'52.7" (LT)
D	3°10'59.2"
L	368.03' (ARC)
T	184.66'
R	1,800.00'

EXIST. BELLEFONTAINE RD	
CURVE_EX_BELLEFONTAINE_RD	
PI	5+39.52
PC	3+00.00
PT	10+78.25
Δ	5°23'28.5" (LT)
D	0°30'0.0"
L	778.25' (ARC)
T	539.52'
R	11,459.20'

ALIGNMENT DATA
STA 643+00 TO STA 670+00
SHEET 3 OF 4

THIS SHEET HAS BEEN SIGNED, SEALED, AND DATED ELECTRONICALLY.

DATE PREPARED 3/25/2026
ROUTE I-270 | STATE MO
DISTRICT SL | SHEET NO. 6
COUNTY ST. LOUIS
JOB NO. JSL0021
CONTRACT ID.
PROJECT NO.
BRIDGE NO.

DESCRIPTION | DATE

IF A SEAL IS PRESENT ON THIS SHEET IT HAS BEEN ELECTRONICALLY SEALED AND DATED.

MISSOURI HIGHWAYS AND TRANSPORTATION COMMISSION
105 WEST CAPITOL
JEFFERSON CITY, MO 65102
1-888-ASK-MODOT (1-888-275-6636)

HDR Engineering, Inc.
1001 Highlands Plaza Drive
Suite 200
St. Louis, MO 63110-1337
314-425-8300
Certificate of Authority: 000856



ALIGNMENT DATA
STA 670+00 TO STA 697+00
SHEET 4 OF 4

STATE OF MISSOURI
EUGENE LOUIS KUELKER JR.
NUMBER PE-2011000912
PROFESSIONAL ENGINEER

THIS SHEET HAS BEEN SIGNED, SEALED, AND DATED ELECTRONICALLY.

DATE PREPARED 3/25/2026	
ROUTE I-270	STATE MO
DISTRICT SL	SHEET NO. 7
COUNTY ST. LOUIS	
JOB NO. JSL0021	
CONTRACT ID.	
PROJECT NO.	
BRIDGE NO.	

DATE	DESCRIPTION

IF A SEAL IS PRESENT ON THIS SHEET IT HAS BEEN ELECTRONICALLY SEALED AND DATED.

MISSOURI HIGHWAYS AND TRANSPORTATION COMMISSION
MoDOT
105 WEST CAPITOL
JEFFERSON CITY, MO 65102
1-888-ASK-MODOT (1-888-275-6636)

HDR Engineering, Inc.
1001 Highlands Plaza Drive
Suite 200
St. Louis, MO 63110-1337
314-425-8300
Certificate of Authority: 000856

c:\pwworking\central01\d4324513\007_AL04_JSL0021_I100.dgn 2:39:04 PM 3/25/2026

CHRISTIAN NORTHEAST-VILLAGE NORTH
BOUNDARY ADJUSTMENT PLAT

09F210136
CHRISTIAN HEALTH SERVICES DEVELOPMENT
DB 21600, PG 2982

09F210026
CHRISTIAN HEALTH SERVICESDEV CORP
DB 07731, PG 0317

590

595

600

EX ROW

DUNN RD

PC STA 592+61.59

BEGIN PROJECT
STA 593+96.00
℄ EXIST. I-270

I-270 WB

℄ EXIST. I-270

BEGIN TYPE C BARRIER
STA 593+96.00

I-270 EB

PT STA 596+70.00

EQUATION:
STA 596+65.33 BK
STA 596+70.00 AH

PERSHALL RD

EX ROW

SAWCUT

+34.00
54.0'

41'-0"

(R&R)

EX. 24" PIPE (UIP)

12'-0"

S.L.

SAWCUT

EX. INLET
(UIP)

SAWCUT

41'-0"

+70.00
61.5'

SAWCUT

S.L.

REMOVE AND REPLACE EXISTING
SHOULDER WITH FULL DEPTH
PAVEMENT. MATCH EXISTING
EDGE OF SHOULDER

MATCHLINE STA 603+50 EXIST. I-270

SECTION 32

SECTION 33

10F510030
L K PROPERTIES II LLLP
DB 15818, PG 0824

GENERAL NOTES:

1. ANY WORK INDICATED ON THE PLANS THAT EXTENDS BEYOND THE PROJECT LIMITS IS CONSIDERED INCIDENTAL TO AND A PART OF THE CONSTRUCTION OF THIS PROJECT.
2. ALL BEARINGS ARE BASED ON STATE PLANS BEARINGS, EASTERN ZONE.
3. SEE DRAINAGE SHEETS FOR PROPOSED DRAINAGE DETAILS.
4. SEE LIGHTING SHEETS FOR PROPOSED LIGHTING DETAILS.
5. SEE MO 367 PLAN SHEET FOR MO 367 DETAILS.
6. SEE BELLEFONTAINE RD PLAN SHEET FOR BELLEFONTAINE RD DETAILS.
7. ALL EXISTING IMPROVEMENTS LOCATED WITHING THE SLOPE LIMITS SHOWN ON THE PLANS ARE TO BE REMOVED UNLESS OTHERWISE NOTED ON THE PLANS.
8. ALL STATIONS AND OFFSETS ARE FROM ℄ EXIST I-270 UNLESS NOTED.
9. FOR TURNING DIAGRAMS AND INTERSECTIONS ANGLES SEE GEOMETRIC DATA SHEETS.

LEGEND

EXISTING PAVEMENT/
SHOULDER REMOVAL

PROPOSED PAVEMENT
AND BASE

SCALE

0 50 100 150

I-270 ROADWAY PLAN
STA 590+00 TO STA 603+50
SHEET 1 OF 8

STATE OF MISSOURI
EUGENE LOUIS KUEKER JR.
NUMBER PE-2011000912
PROFESSIONAL ENGINEER

THIS SHEET HAS BEEN SIGNED, SEALED, AND DATED ELECTRONICALLY.

IF A SEAL IS PRESENT ON THIS SHEET IT HAS BEEN ELECTRONICALLY SEALED AND DATED.

DATE PREPARED
3/25/2026

ROUTE	STATE
I-270	MO
DISTRICT	SHEET NO.
SL	8

COUNTY
ST. LOUIS

JOB NO.
JSL0021

CONTRACT ID.

PROJECT NO.

BRIDGE NO.

DESCRIPTION	DATE

MISSOURI HIGHWAYS AND TRANSPORTATION COMMISSION

105 WEST CAPITOL
JEFFERSON CITY, MO 65102
1-888-ASK-MODOT (1-888-275-6636)

HDR Engineering, Inc.
1001 Highlands Plaza Drive
Suite 200
St. Louis, MO 63110-1337
314-425-8300
Certificate of Authority: 000856

c:\pwworking\central01\d4324513\008_PL01_JSL0021_I50_I-270.dgn 2:39:30 PM 3/25/2026

MATCHLINE STA 603+50 EXIST. I-270

MATCHLINE STA 617+00 EXIST. I-270

END MILL & OVERLAY AND FULL DEPTH SHOULDER, BEGIN FULL DEPTH PAVEMENT STA 7+67.00 ℄ EXIST. RAMP 8-D

END FULL DEPTH PAVEMENT, BEGIN MILL & OVERLAY AND CONTINUE FULL DEPTH SHOULDER STA 3+42.00 ℄ EXIST. RAMP 8-D

INSTALL BRIDGE TRANSITION SECTION (REGULAR/NO CURB), MGS GUARDRAIL, AND MGS END ANCHOR FROM STA 607+52.92 TO STA 609+19.49

INSTALL MGS END ANCHOR, MGS GUARDRAIL, AND TYPE A CET (MASH) FROM STA 604+18.62 TO STA 605+83.50

BEGIN MILL & OVERLAY CROWN TRANSITION STA 604+70.00

END MILL & OVERLAY CROWN TRANSITION BEGIN FULL DEPTH PAVEMENT STA 605+70.00

STA 608+30.46 TO STA 608+80.46 TRANSITION FROM TYPE C BARRIER TO MODIFIED TYPE C BARRIER AND TRANSITION SHOULDERS FROM 5'-0" TO 4'-6"

END MAINLINE FULL DEPTH PAVEMENT STA 609+04.52

BRIDGE APPROACH SLAB (SEE BRIDGE PLANS)

PROPOSED CONCRETE SLOPE PROTECTION

(SEE MO 367 PLAN SHEET FOR DETAILS)

ROCK LINING FOR CULVERT OUTLET

PROPOSED CONCRETE APPROACH PAVEMENT

BEGIN V-DITCH STA 610+79.80, 134.7' RT EL. 551.50

REMOVE EXISTING BRIDGE J0847 (46'-52'-52'-46')

STA 610+16.27 ℄ EXIST. I-270 = STA 525+67.45 ℄ EXIST. MO 367

INSTALL BRIDGE TRANSITION SECTION (REGULAR/NO CURB), MGS GUARDRAIL, AND MGS VERTICAL BARRIER TRANSITION FROM STA 611+08.02 TO STA 614+40.76

BEGIN MAINLINE FULL DEPTH PAVEMENT STA 611+22.52

STA 611+71.03 TO STA 612+21.03 TRANSITION FROM MODIFIED TYPE C BARRIER TO TYPE C BARRIER AND TRANSITION SHOULDERS FROM 4'-6" TO 5'-0"

TRANSITION PROP. SHOULDER WIDTH FROM 6' TO 10' FROM STA 612+46.23 TO STA 614+45.87

END V-DITCH STA 613+26.36, 156.1' RT EL. 550.33

END FULL DEPTH PAVEMENT AND TYPE C BARRIER BEGIN MILL & OVERLAY CROWN TRANSITION STA 614+75.00

END MILL & OVERLAY CROWN TRANSITION STA 615+75.00

EX. INLET (UIP)
EX. 24" PIPE (UIP)
EX. 36" PIPE (UIP)
EX. INLET (TBR)
EX. INLET (ATG)
EX. 30" PIPE (UIP)
EX. MANHOLE (UIP)
EX. 42" PIPE (UIP)
EX. 42" PIPE (UIP)
EX CHAIN LINK FENCE (UIP)
EX MSE WALL A8982 (UIP)
EX BRIDGE ANCHOR AND MGS GUARDRAIL (UIP)
EX CHAIN LINK FENCE (UIP)
EX TYPE D BARRIER (UIP)
EX MSE WALL A8983 (UIP)
EX ROW

℄ EXIST. RAMP 8-D
℄ EXIST. MO 367
(SEE MO 367 PLAN SHEET FOR DETAILS)
℄ EXIST. I-270

RAMP 8-H
RAMP 8-D
RAMP 8-G
RAMP 8-F
MO 367 FLYOVER RAMP

I-270 WB
I-270 EB
BRIDGE A9490
BRIDGE A9489

PCC STA 5+37.88
PCC STA 7+83.02
PCC STA 8+29.62
PCC STA 1+45.95
START STA 0+00.00

SAWCUT
S.L.
SIGN
FO
UT
UE
W

LEGEND

- EXISTING PAVEMENT/ SHOULDER REMOVAL
- PROPOSED PAVEMENT AND BASE
- MILL & OVERLAY
- PROPOSED CONCRETE SLOPE PROTECTION
- PROPOSED ROCK BLANKET

SCALE 0 50 100 150

STATE OF MISSOURI
EUGENE LOUIS KUELKER JR.
NUMBER PE-2010009912
PROFESSIONAL ENGINEER

THIS SHEET HAS BEEN SIGNED, SEALED, AND DATED ELECTRONICALLY.

IF A SEAL IS PRESENT ON THIS SHEET IT HAS BEEN ELECTRONICALLY SEALED AND DATED.

DATE PREPARED 3/25/2026

ROUTE	STATE
I-270	MO
DISTRICT	SHEET NO.
SL	9

COUNTY ST. LOUIS

JOB NO. JSL0021

CONTRACT ID.

PROJECT NO.

BRIDGE NO.

DATE	DESCRIPTION

MISSOURI HIGHWAYS AND TRANSPORTATION COMMISSION

105 WEST CAPITOL
JEFFERSON CITY, MO 65102
1-888-ASK-MODOT (1-888-275-6636)

HDR Engineering, Inc.
1001 Highlands Plaza Drive
Suite 200
St. Louis, MO 63110-1337
314-425-8300
Certificate of Authority: 000856

I-270 ROADWAY PLAN
STA 603+50 TO STA 617+00
SHEET 2 OF 8

NOTE: ALL STATIONS AND OFFSETS ON THIS SHEET REFER TO ℄ EXIST. I-270 UNLESS OTHERWISE STATED

c:\pwworking\central01\d4324513\009_PL02_JSL0021_I50_I-270.dgn 2:39:39 PM 3/25/2026

MATCHLINE STA 617+00 EXIST. I-270

MATCHLINE STA 630+50 EXIST. I-270

09F310049
STATE OF MISSOURI
DB 02938, PG 0024

09F320026
CHAPTER 100
ST LOUIS COUNTY
DB 18667, PG 3326

620 625 630

DUNN RD

RAMP 8-G

RAMP 8-F

EX ROW

EX MGS GUARDRAIL AND TYPE A CET (MASH) (UIP)

10'-0"

+41.19
52.0'

+11.11
55.5'

SAWCUT

EX. INLET (UIP)

41'-0"

(DND)

S89°54'40"E

+47.00
60.0'

47'-0"

℄ EXIST. I-270

I-270 WB

I-270 EB

12'-0"

+98.63
60.0'

S.L.

+14.96
52.9'

REMOVE AND REPLACE EXISTING SHOULDER WITH FULL DEPTH PAVEMENT. MATCH EXISTING EDGE OF SHOULDER

EX. 18" PIPE (UIP)

+80.75
54.0'

+81.58
57.7'

+52.58
42.10'

+56.76
53.2'

10'-8"

10F610020
DEPT OF PUBLIC HEALTH & WELFARE
DB 71948, PG 0167

10F610031
DEPT OF PUBLIC HEALTH & WELFARE
DB 71948, PG 0167

10F610021
DEPT OF PUBLIC HEALTH & WELFARE
DB 71948, PG 0167

LEGEND

EXISTING PAVEMENT/ SHOULDER REMOVAL

PROPOSED PAVEMENT AND BASE

SCALE
0 50 100 150

I-270 ROADWAY PLAN
STA 617+00 TO STA 630+50
SHEET 3 OF 8

STATE OF MISSOURI
EUGENE LOUIS KUEKER JR.
NUMBER PE-2010000912
PROFESSIONAL ENGINEER

THIS SHEET HAS BEEN SIGNED, SEALED, AND DATED ELECTRONICALLY.

IF A SEAL IS PRESENT ON THIS SHEET IT HAS BEEN ELECTRONICALLY SEALED AND DATED.

DATE PREPARED	
3/25/2026	
ROUTE	STATE
I-270	MO
DISTRICT	SHEET NO.
SL	10
COUNTY	
ST. LOUIS	
JOB NO.	
JSL0021	
CONTRACT ID.	
PROJECT NO.	
BRIDGE NO.	

DESCRIPTION	DATE

MISSOURI HIGHWAYS AND TRANSPORTATION COMMISSION

105 WEST CAPITOL
JEFFERSON CITY, MO 65102
1-888-ASK-MODOT (1-888-275-6636)

HDR Engineering, Inc.
1001 Highlands Plaza Drive
Suite 200
St. Louis, MO 63110-1337
314-425-8300
Certificate of Authority: 000856

09F320026
CHAPTER 100 ST LOUIS COUNTY
DB 18667, PG 3326

09E110192
STELLCO ENTERPRISES LLC
DB 22854, PG 3522

MATCHLINE STA 630+50 EXIST. I-270

MATCHLINE STA 642+50 EXIST. I-270

635

640

EX ROW

DUNN RD

INSTALL MGS END ANCHOR, MGS GUARDRAIL, AND TYPE A CET (MASH) FROM STA 632+41.72 TO STA 633+88.63

S.L.

(R)

10'-9"

+75.30
52.8'

SAWCUT

EX. INLET (UIP)

EX. 15" PIPE (UIP)

41'-0"

℄ EXIST. I-270

(CMD)

I-270 WB

I-270 EB

EQUATION:
STA 642+17.06 BK =
STA 640+97.00

PC STA 642+45.26 R3

EX. 12" PIPE (UIP)

EX. 15" PIPE (UIP)

REMOVE AND REPLACE EXISTING SHOULDER WITH FULL DEPTH PAVEMENT. MATCH EXISTING EDGE OF SHOULDER

INSTALL TYPE A CET (MASH), MGS GUARDRAIL, AND VERTICAL BARRIER TRANSITION FROM STA 640+62.22 TO STA 641+26.22

+62.22
52.5'

PROP TYPE D BARRIER FROM STA 641+26.22 TO STA 641+41.22

10F610021
DEPT OF PUBLIC HEALTH & WELFARE
DB 71948, PG 0167

LEGEND

EXISTING PAVEMENT/ SHOULDER REMOVAL

PROPOSED PAVEMENT AND BASE

SCALE

0 50 100 150

I-270 ROADWAY PLAN
STA 630+50 TO STA 642+50
SHEET 4 OF 8

THIS SHEET HAS BEEN SIGNED, SEALED, AND DATED ELECTRONICALLY.

IF A SEAL IS PRESENT ON THIS SHEET IT HAS BEEN ELECTRONICALLY SEALED AND DATED.

DATE PREPARED: 3/25/2026
ROUTE: I-270
STATE: MO
DISTRICT: SL
SHEET NO.: 11
COUNTY: ST. LOUIS
JOB NO.: JSL0021
CONTRACT ID.:
PROJECT NO.:
BRIDGE NO.:

DESCRIPTION | DATE

MISSOURI HIGHWAYS AND TRANSPORTATION COMMISSION
105 WEST CAPITOL
JEFFERSON CITY, MO 65102
1-888-ASK-MODOT (1-888-275-6636)

HDR Engineering, Inc.
1001 Highlands Plaza Drive
Suite 200
St. Louis, MO 63110-1337
314-425-8300
Certificate of Authority: 000856

c:\pwworking\central01\d4324513\011_PL04_JSL0021_I50_I-270.dgn 2:39:57 PM 3/25/2026

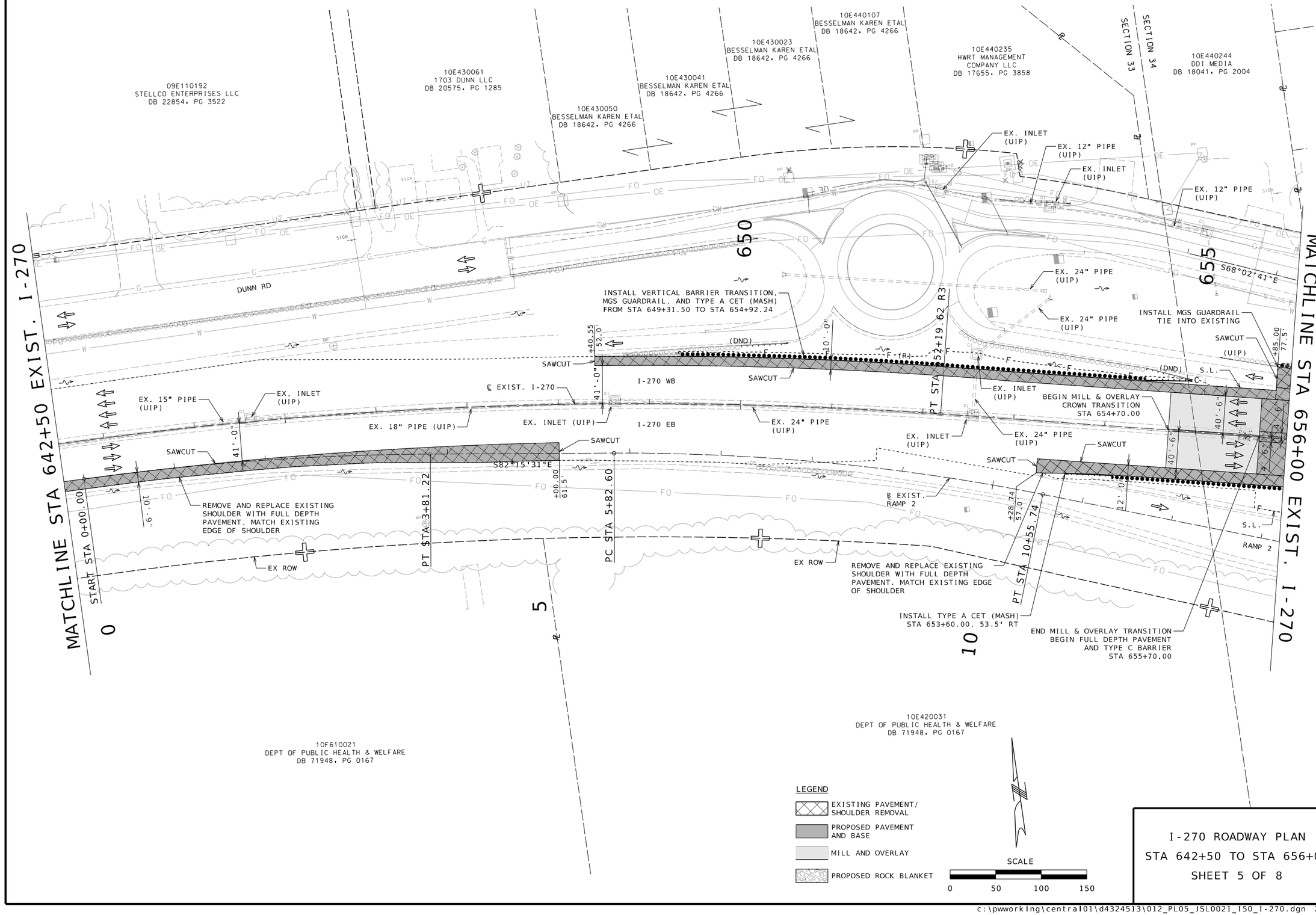

I-270 ROADWAY PLAN
STA 642+50 TO STA 656+00
SHEET 5 OF 8

STATE OF MISSOURI
EUGENE LOUIS KUEKER JR.
NUMBER PE-2011000912
PROFESSIONAL ENGINEER
THIS SHEET HAS BEEN SIGNED, SEALED, AND DATED ELECTRONICALLY.

DATE PREPARED 3/25/2026
ROUTE I-270 | STATE MO
DISTRICT SL | SHEET NO. 12
COUNTY ST. LOUIS
JOB NO. JSL0021
CONTRACT ID.
PROJECT NO.
BRIDGE NO.

DESCRIPTION | DATE

IF A SEAL IS PRESENT ON THIS SHEET IT HAS BEEN ELECTRONICALLY SEALED AND DATED.

MISSOURI HIGHWAYS AND TRANSPORTATION COMMISSION
105 WEST CAPITOL
JEFFERSON CITY, MO 65102
1-888-ASK-MODOT (1-888-275-6636)

HDR Engineering, Inc.
1001 Highlands Plaza Drive
Suite 200
St. Louis, MO 63110-1337
314-425-8300
Certificate of Authority: 000856

MATCHLINE STA 656+00 EXIST. I-270

MATCHLINE STA 669+50 EXIST. I-270

STA 662+76.80 ℄ EXIST. DUNN RD =
STA 11+72.72 ℄ EXIST. BELLEFONTAINE RD

STA 660+60.39 ℄ EXIST. I-270 =
STA 13+04.79 ℄ EXIST. BELLEFONTAINE RD

STA 17+98.89 ℄ EXIST. RAMP 2 =
STA 14+79.56 ℄ EXIST. BELLEFONTAINE RD

STA 0+00.00 ℄ EXIST. RAMP 4 =
STA 14+79.56 ℄ EXIST. BELLEFONTAINE RD

10E440060
HUSTON KENNETH L ETAL
DB 6882, PG 1345

10E440262
CROSS FAMILY REAL ESTATE
LIMITED PARTNERSHIP
DB 17018, PG 2747

10E440253
FRANKE RUTH
TRUSTEE
DB 16018, PG 0899

10E440271
DARYA TAL PC LLC
DB 24378, PG 2942

10E440033
WALLIS OIL CO INC
DB 16830, PG 1072

10E530453
EXCHANGE RIGHT
NET LEASED
PORTFLIO 39 DST
DB 241388, PG 82

10E530114
AMI KUSH INC
DB 20965, PG 1096

10E530051
D&T COLE
PROPERTIES LLC
DB 17196, PG 2965

10E530444
RJCA LLC
DB 22216, PG 796

10E440161
JOE'S SPH LLC
DB 20448, PG 1133

10E440170
CIRCLE OF LIGHT CHURCH
DB 18541, PG 2648

10E420031
DEPT OF PUBLIC HEALTH & WELFARE
DB 71948, PG 0167

BELLEFONTAINE RD

DUNN RD

I-270 WB

I-270 EB

BRIDGE A9494

BRIDGE A9493

RAMP 2

RAMP 4

SECTION 34
US SURVEY 2713

PC STA 658+50.17

PT STA 662+18.20

POT STA 665+27.18

PT STA 10+78.25

PC STA 7+79.06

END STA 17+98.89

START STA 0+00.00

S70°41'14"E

S77°57'25"E

S85°43'01"E

S01°21'58"W

TCE

EX 18" PIPE (UIP)

EX LIGHT POLE (R)

EX ROW

EX CURB (R&R)

EX PULLBOX (R&R)

EX PULLBOX (ATG)

℄ EXIST. BELLEFONTAINE RD

℄ EXIST. DUNN RD

EX INLET (ATG)

EX. 12" PIPE (UIP)

EX. 15" PIPE (UIP)

EX. 96" PIPE (UIP)

EX. 18" PIPE (UIP)

EX. 12" PIPE (UIP)

EX INLET (ATG)

EX 15" PIPE (UIP)

S.L.

SAWCUT

℄ EXIST. I-270

℄ EXIST. RAMP 2

℄ EXIST. RAMP 4

(SEE BELLEFONTAINE RD PLAN SHEET FOR DETAILS)

EX OVERHEAD SIGN (R&R)
SEE SIGNING SHEETS FOR DETAILS

INSTALL MGS GUARDRAIL AND BRIDGE TRANSITION SECTION
STA 659+49.27, 53.5' LT

INSTALL MGS GUARDRAIL AND BRIDGE TRANSITION SECTION
STA 661+79.28, 53.5' LT

INSTALL MGS END ANCHOR, MGS GUARDRAIL, AND BRIDGE TRANSITION SECTION
STA 661+88.03 TO STA 666+20.00, 53.5' RT

INSTALL TYPE A CET (MASH), MGS GUARDRAIL, AND BRIDGE TRANSITION SECTION

STA 658+36.90 TO STA 658+86.90
TRANSITION FROM TYPE C BARRIER TO MODIFIED TYPE C BARRIER AND TRANSITION SHOULDERS FROM 4'-6" TO 4'-0"

STA 662+31.88 TO STA 662+81.88
TRANSITION FROM MODIFIED TYPE C BARRIER TO TYPE C BARRIER AND TRANSITION SHOULDERS FROM 4'-0" TO 4'-6"

PROPOSED CONCRETE APPROACH PAVEMENT

BRIDGE APPROACH SLAB (SEE BRIDGE PLANS)

PROPOSED CONCRETE APPROACH PAVEMENT
BRIDGE APPROACH SLAB (SEE BRIDGE PLANS)
(SEE BELLEFONTAINE RD PLAN SHEET FOR DETAILS)

REMOVE EXISTING BRIDGE A0241 (48'-64'-48')

END FULL DEPTH PAVEMENT
BEGIN MILL & OVERLAY CROWN TRANSITION
STA 666+20.00

END MILL & OVERLAY CROWN TRANSITION
STA 667+20.00

LEGEND

- EXISTING PAVEMENT/ SHOULDER REMOVAL
- PROPOSED PAVEMENT AND BASE
- MILL & OVERLAY
- PROPOSED ROCK BLANKET
- PROPOSED CONCRETE SLOPE PROTECTION
- PROPOSED SIDEWALK
- TCE

NOTE: ALL STATIONS AND OFFSETS ON THIS SHEET REFER TO ℄ EXIST. I-270 UNLESS OTHERWISE STATED

SCALE
0 50 100 150

I-270 ROADWAY PLAN
STA 656+00 TO STA 669+50
SHEET 6 OF 8

STATE OF MISSOURI
EUGENE LOUIS KLEKNER JR.
NUMBER PE-2011000912
PROFESSIONAL ENGINEER

THIS SHEET HAS BEEN SIGNED, SEALED, AND DATED ELECTRONICALLY.

IF A SEAL IS PRESENT ON THIS SHEET IT HAS BEEN ELECTRONICALLY SEALED AND DATED.

DATE PREPARED: 3/25/2026
ROUTE: I-270 | STATE: MO
DISTRICT: SL | SHEET NO.: 13
COUNTY: ST. LOUIS
JOB NO.: JSL0021
CONTRACT ID.:
PROJECT NO.:
BRIDGE NO.:

DESCRIPTION | DATE

MISSOURI HIGHWAYS AND TRANSPORTATION COMMISSION
105 WEST CAPITOL
JEFFERSON CITY, MO 65102
1-888-ASK-MODOT (1-888-275-6636)

HDR Engineering, Inc.
1001 Highlands Plaza Drive
Suite 200
St. Louis, MO 63110-1337
314-425-8300
Certificate of Authority: 000856

MATCHLINE STA 669+50

MATCHLINE STA 683+00 EXIST. I-270

10E530392
270 PROPERTIES LLC
DB 19646, PG 3156

10E530444
RJCA LLC
DB 22216, PG 796

10E530013
CRYSTAL FOODS
& GAS INC
DB 17973, PG 1260

10E530031
CRYSTAL FOODS
& GAS INC
DB 17973, PG 1260

10E530316
S S & CO OF
DUNN STREET INC
DB 17688, PG 3606

10E540072
PFITZNER EBERHARD
REV LIVING TRUST
DB 21885, PG 410

10E540061
ADAMS JOHN G
PATRICIA A H/W
DB 08611, PG 2437

10E540050
MASON DONNY RAY
& JO ANN H/W
DB 21734, PG 1624

10E540032
BUSKEN CONSTRUCTION
COMPANY
DB 13571, PG 2060

EX ROW

DUNN RD

PERSHALL RD

S.L.

EX. INLET (ATG)

INSTALL MGS GUARDRAIL AND TYPE A CET (MASH) STA 676+60.00, 53.5' LT

REMOVE AND REPLACE EXISTING SHOULDER WITH FULL DEPTH PAVEMENT. MATCH EXISTING EDGE OF SHOULDER

12'-0"

41'-0"

I-270 WB

I-270 EB

(DND)

(R)

(RBO)

EX. INLET (UIP)

SAWCUT

℄ EXIST. I-270

EX. 18" PIPE (UIP)

EX. 36" PIPE (UIP)

EX. 12" PIPE (UIP)

EX. 60" PIPE (UIP)

S77°57'25"E

END TYPE G BARRIER
STA 676+35.00

S77°57'26"E

℄ EXIST. RAMP 4

PT STA 10+00.80

+10.00
61.6'

END STA 14+10.80

REMOVE AND REPLACE EXISTING SHOULDER WITH FULL DEPTH PAVEMENT. MATCH EXISTING EDGE OF SHOULDER

US SURVEY 2713

US SURVEY 112

10E510163
RAFTERY GREGORY D
DB 21965, PG 348

10E520074
B&P PARTNERSHIP LLC
DB 18041, PG 1287

10E520113
WEISE MICHAEL G
& MCLAUGHLIN SUSAN H/W TRS
DB 17818, PG 1039

10E510163
RAFTERY GREGORY D
DB 21965, PG 354

10E520063
RAFTERY GREGORY D
DB 21472, PG 3523

10E510174
GRAVES RONALD R
DB 17989, PG 684

10E510204
KNICHEL JAMES RICHARDSON
& MARY LEE H
DB 6372, PG 2018

SCALE
0 50 100 150

LEGEND
EXISTING PAVEMENT/ SHOULDER REMOVAL
PROPOSED PAVEMENT AND BASE

I-270 ROADWAY PLAN
STA 669+50 TO STA 683+00
SHEET 7 OF 8

STATE OF MISSOURI
EUGENE LOUIS KUEKER JR.
NUMBER PE-2010000912
PROFESSIONAL ENGINEER

THIS SHEET HAS BEEN SIGNED, SEALED, AND DATED ELECTRONICALLY.

IF A SEAL IS PRESENT ON THIS SHEET IT HAS BEEN ELECTRONICALLY SEALED AND DATED.

DATE PREPARED	
3/25/2026	
ROUTE	STATE
I-270	MO
DISTRICT	SHEET NO.
SL	14

COUNTY
ST. LOUIS

JOB NO.
JSL0021

CONTRACT ID.

PROJECT NO.

BRIDGE NO.

DATE	DESCRIPTION

MISSOURI HIGHWAYS AND TRANSPORTATION COMMISSION
105 WEST CAPITOL
JEFFERSON CITY, MO 65102
1-888-ASK-MODOT (1-888-275-6636)

HDR Engineering, Inc.
1001 Highlands Plaza Drive
Suite 200
St. Louis, MO 63110-1337
314-425-8300
Certificate of Authority: 000856

MATCHLINE STA 683+00 EXIST. I-270

10E540032
BUSKEN CONSTRUCTION COMPANY
DB 13571, PG 2060

10E540344
USI 270 LP
DB 09197, PG 0212

10E630205
CORGAF LLC
DB 20532, PG 5022

685

690

695

EX ROW

BNSF ROW

BNSF ROW

DUNN RD

REMOVE AND REPLACE EXISTING SHOULDER WITH FULL DEPTH PAVEMENT. MATCH EXISTING EDGE OF SHOULDER

SAWCUT

END FULL DEPTH PAVEMENT
STA 685+98.00

+98.00
53.4'

9'-0"

S.L.

SAWCUT

8'-10"

52'-11"

EX. 12" PIPE (UIP)

EX. INLET (UIP)

EX. 12" PIPE (UIP)

END PROJECT
STA 685+98.00
℄ EXIST. I-270

EX. INLET (UIP)

EX. 18" PIPE (UIP)

S.L.

EX. 12" PIPE (UIP)

EX. INLET (UIP)

EX. 15" PIPE (UIP)

I-270 WB

I-270 EB

℄ EXIST. I-270

EX. 15" PIPE (UIP)

EX. INLET (UIP)

EX. 12" PIPE (UIP)

MODOT TIS BRIDGE ATTACHMENT

PERSHALL RD

EX ROW

10E520113
WEISE MICHAEL G
& MCLAUGHLIN SUSAN H/W TRS
DB 17818, PG 1039

10E520041
WEISE MICHAEL G
& MCLAUGHLIN SUSAN H/W TRS
DB 21528, PG 374

BNSF ROW

BNSF ROW

LEGEND

EXISTING PAVEMENT/ SHOULDER REMOVAL

PROPOSED PAVEMENT AND BASE

SCALE

0 50 100 150

I-270 ROADWAY PLAN
STA 683+00 TO STA 696+50
SHEET 8 OF 8

STATE OF MISSOURI
EUGENE LOUIS KUEKER JR.
NUMBER PE-2010000912
PROFESSIONAL ENGINEER

THIS SHEET HAS BEEN SIGNED, SEALED, AND DATED ELECTRONICALLY.

IF A SEAL IS PRESENT ON THIS SHEET IT HAS BEEN ELECTRONICALLY SEALED AND DATED.

DATE PREPARED
3/25/2026

ROUTE	STATE
I-270	MO
DISTRICT	SHEET NO.
SL	15

COUNTY
ST. LOUIS

JOB NO.
JSL0021

CONTRACT ID.

PROJECT NO.

BRIDGE NO.

DATE	DESCRIPTION

MISSOURI HIGHWAYS AND TRANSPORTATION COMMISSION

105 WEST CAPITOL
JEFFERSON CITY, MO 65102
1-888-ASK-MODOT (1-888-275-6636)

HDR Engineering, Inc.
1001 Highlands Plaza Drive
Suite 200
St. Louis, MO 63110-1337
314-425-8300
Certificate of Authority: 000856

LEGEND

- EXISTING PAVEMENT/ SHOULDER REMOVAL
- PROPOSED PAVEMENT AND BASE
- MILL & OVERLAY
- PROPOSED ROCK BLANKET

EX. 42" PIPE (UIP)
EX. MANHOLE (UIP)
EX. 36" PIPE (UIP)
BEGIN MSE WALL NO. A9492 AND MODIFIED TYPE B GUTTER STA 524+64.45, 100.8' LT
EX. INLET (UIP)
EX. 36" PIPE (UIP)
END TYPE C BARRIER TRANSITION BEGIN MODIFIED TYPE C BARRIER STA 525+06.11
EX. INLET (UIP)
INSTALL TYPE A CET (MASH), MGS GUARDRAIL, AND MGS END ANCHOR FROM STA 524+42.02 TO STA 527+97.48
SAWCUT
BEGIN FULL DEPTH PAVEMENT STA 524+59.00
EX. 24" PIPE (UIP)
TRANSITION FROM TYPE A BARRIER TO MODIFIED TYPE C BARRIER AND TRANSITION SHOULDERS FROM 4'-0" TO 2'-2" STA 524+59.00 TO STA 525+06.11
EX. INLET (ATG AND CONVERT TO MANHOLE)
EX. 24" PIPE (UIP)
℄ EXIST. MO 367
BEGIN PAVING, MATCH EXISTING STA 521+53.00, 28.2' RT
SAWCUT
EX. 18" PIPE (UIP)
EX. INLET (R)
EX. INLET (TBR)
EX. 12" PIPE (TBR)
END MILL & OVERLAY AND FULL DEPTH SHOULDER, BEGIN FULL DEPTH PAVEMENT STA 7+67.00 ℄ EXIST. RAMP 8-D
EX. INLET (UIP)
EX. 18" PIPE (UIP)
BEGIN MSE WALL NO. A9491 AND MODIFIED TYPE B GUTTER STA 524+64.21, 105.1' RT
EX. 18" PIPE (UIP)
EX. INLET (UIP)
EX. 12" PIPE (TBR)
EX. INLET (TBR)
END FULL DEPTH PAVEMENT, BEGIN MILL & OVERLAY AND CONTINUE FULL DEPTH SHOULDER STA 3+42.00 ℄ EXIST. RAMP 8-D
BEGIN 2' FLAT BOTTOM PAVED DITCH STA 524+67.37, 64.77' RT EL. 549.85
EX. INLET (TBR)
EX. 15" PIPE (TBR)
EX. INLET (UIP)
EX. 24" PIPE (UIP)
EX. INLET (UIP)
EX. 18" PIPE (UIP)
EX. INLET (TBR)
EX. 12" PIPE (TBR)
EX. INLET (ATG)
EX. 12" PIPE (UIP)
℄ EXIST. I-270
EX. 42" PIPE (UIP)
EX. INLET (UIP)
S.L.
MSE WALL NO. A9492
REMOVE AND REPLACE EX. PAVED DITCH FROM STA 524+74.23 TO STA 526+69.76
END MSE WALL NO. A9492 AND MODIFIED TYPE B GUTTER STA 526+69.48, 62.7' LT
REMOVE EX. PAVED DITCH FROM STA 526+69.76 TO STA 527+13.30
END MODIFIED TYPE C BARRIER BEGIN TYPE C BARRIER TRANSITION STA 526+23.45
END FULL DEPTH PAVEMENT STA 526+70.00
TRANSITION FROM MODIFIED TYPE C BARRIER TO TYPE A BARRIER AND TRANSITION SHOULDERS FROM 2'-2" TO 4'-0" STA 526+22.78 TO STA 526+70.00
STA 610+16.27 ℄ EXIST. I-270 = STA 525+67.45 ℄ EXIST. MO 367
END 2' FLAT BOTTOM PAVED DITCH STA 526+67.21, 60.8' RT MATCH EXISTING
END MSE WALL NO. A9491 AND MODIFIED TYPE B GUTTER STA 526+75.60, 69.9' RT
INSTALL TYPE A CET (MASH), MGS GUARDRAIL, AND MGS END ANCHOR FROM STA 523+11.00 TO STA 526+95.66
MSE WALL NO. A9491
EX. INLET (TBR)
EX. 12" PIPE (TBR)
EX. INLET (ATG)
EX TYPE A CET (MASH), MGS GUARDRAIL, AND MGS BRIDGE ANCHOR (UIP)
EX ROW
RAMP 8-F
EX MSE WALL A8980 (UIP)
EX CONC BARRIER, TYPE D (UIP)
EX CHAIN LINK FENCE (UIP)
EX TYPE A CET (MASH), MGS GUARDRAIL, AND MGS BRIDGE ANCHOR (UIP)
MO 367 NB
S00°16'46"E
MO 367 SB
SAWCUT
S.L.
EX CHAIN LINK FENCE (UIP)
EX CONC BARRIER, TYPE D (UIP)
EX MSE WALL A8979 (UIP)
END PAVING, MATCH EXISTING STA 532+41.00, 41.3' RT
MO 367 FLYOVER RAMP
RAMP 8-E
EX ROW
RAMP 8-H
RAMP 8-D
BRIDGE A9490
BRIDGE A9489
I-270 WB
I-270 EB
520
525
530
610
605
END STA 10+46.57
START STA 0+00.00
PCC STA 8+29.62
PCC STA 7+83.02
PCC STA 5+37.88
PCC STA 1+45.85
+01.47 63.8'
+00.59 68.7'
+12.83 54.0' ℄ EXIST. I-270
+22.64 6.0' ℄ EXIST. RAMP 8-D
+53.00 42.2'
+47.46 44.2'
+21.26 28.0'
+70.02 51.9'
+22.45 51.8'
+26.64 40.0'
+26.64 47.0'
+41.00 48.3'
14'-0"
28'-0"
40'-0"
7'-0"

NOTE: ALL STATIONS AND OFFSETS ON THIS SHEET REFER TO ℄ EXIST. MO 367 UNLESS OTHERWISE STATED

SCALE
0 50 100 150

MO 367 ROADWAY PLAN
STA 520+00 TO STA 533+50
SHEET 1 OF 1

STATE OF MISSOURI
EUGENE LOUIS KUELKER JR.
NUMBER PE-2010009912
PROFESSIONAL ENGINEER
THIS SHEET HAS BEEN SIGNED, SEALED, AND DATED ELECTRONICALLY.

DATE PREPARED 3/25/2026
ROUTE I-270 | STATE MO
DISTRICT SL | SHEET NO. 16
COUNTY ST. LOUIS
JOB NO. JSL0021
CONTRACT ID.
PROJECT NO.
BRIDGE NO.

DESCRIPTION	DATE

IF A SEAL IS PRESENT ON THIS SHEET IT HAS BEEN ELECTRONICALLY SEALED AND DATED.

MISSOURI HIGHWAYS AND TRANSPORTATION COMMISSION
105 WEST CAPITOL
JEFFERSON CITY, MO 65102
1-888-ASK-MODOT (1-888-275-6636)

HDR Engineering, Inc.
1001 Highlands Plaza Drive
Suite 200
St. Louis, MO 63110-1337
314-425-8300
Certificate of Authority: 000856

c:\pwworking\central01\d4324513\016_PL09_JSL0021_I50_MO-367.dgn 2:40:42 PM 3/25/2026

SCALE
0 50 100 150

LEGEND
- EXISTING PAVEMENT/ SHOULDER REMOVAL
- PROPOSED PAVEMENT AND BASE
- MILL & OVERLAY
- PROPOSED ROCK BLANKET
- PROPOSED CONCRETE SLOPE PROTECTION
- PROPOSED SIDEWALK
- TCE

10E530453
EXCHANGE RIGHT NET LEASED PORTFLIO 39 DST
DB 241388, PG 82

665

EX ROW

S.L.

℄ EXIST. DUNN RD

BEGIN 1' FLAT BOTTOM PAVED DITCH
STA 12+35.78, 52.8' LT
EL. 478.48

END MILL & OVERLAY MATCH EXISTING
STA 664+23.50
℄ EXIST. DUNN RD

10E440033
WALLIS OIL CO INC
DB 16830, PG 1072

POT STA 665+27.18

INSTALL BARRIER TRANSITION SECTION AND TYPE A CET (MASH)
STA 663+66.84,
℄ EXIST. DUNN RD

665

TRANSITION TYPE D BARRIER TO TYPE B BARRIER
STA 663+54.49 TO
STA 663+64.41
℄ EXIST. DUNN RD

10E440271
DARYA TAL PC LLC
DB 24378, PG 2942

10E440192
FOX SAMUEL TRUSTEE
DB 10316, PG 1387

END PROPOSED SIDEWALK MATCH EXISTING
STA 11+46.08, 61.5' LT

SAWCUT

BEGIN PROPOSED SIDEWALK MATCH EXISTING
STA 10+55.64, 51.9' LT

EX ROW

EXISTING CONCRETE MEDIAN (UIP)

BEGIN MILL & OVERLAY (MATCH EXISTING
STA 10+86.35

PT STA 10+78.25

6'-0"

℄ EXIST. I-270

℄ EXIST. RAMP 4

EX ROW

10E440170
CIRCLE OF LIGHT CHURCH
DB 18541, PG 2648

S85°43'01"E

STA 662+76.80 ℄ EXIST. DUNN RD =
STA 11+72.72 ℄ EXIST. BELLEFONTAINE RD

STA 660+60.39 ℄ EXIST. I-270 =
STA 13+04.79 ℄ EXIST. BELLEFONTAINE RD

I-270 WB

I-270 EB

RAMP 4

DUNN RD

END 1' FLAT BOTTOM PAVED DITCH
STA 13+64.29, 49.5' LT
EL. 478.41

END TYPE B BARRIER
STA 14+52.17, 64.8' LT

END MILL & OVERLAY MATCH EXISTING
STA 1+12.98
℄ EXIST. RAMP 4

10E440161
JOE'S SPH LLC
DB 20448,
PG 1133

STA 0+00.00 ℄ EXIST. RAMP 4 =
STA 14+79.56 ℄ EXIST. BELLEFONTAINE RD

END FULL DEPTH PAVEMENT
STA 14+54.19, 24.0' LT

END MILL & OVERLAY MATCH EXISTING
STA 18+50.00

EX ROW

BELLEFONTAINE RD NB

BELLEFONTAINE RD SB

START STA 0+00.00

0

END STA 17+98.89

S07°21'58"W

SAWCUT

EX ROW

BRIDGE A9493

BRIDGE A9494

EX HANDHOLES (ATG)

PT STA 662+18.20

660

TCE

+67.00 50.9'
+67.00 59.0'
0'-9"
+73.05 59.0'

* PROP 6" CONCRETE MEDIAN

BEGIN FULL DEPTH PAVEMENT
STA 12+05.78, 24.0' LT

SAWCUT

10E440262
CROSS FAMILY REAL ESTATE LIMITED PARTNERSHIP
DB 17018, PG 2747

660

END MILL & OVERLAY MATCH EXISTING
STA 661+89.10
℄ EXIST. DUNN RD

BEGIN 1' FLAT BOTTOM PAVED DITCH
STA 12+17.00, 51.0' RT
EL. 479.14

PC STA 658+50.17

10E440253
FRANKE RUTH TRUSTEE
DB 16018, PG 0899

US SURVEY 2713
SECTION 34

RAMP 2

S70°41'14"E

+37.81 30.0'

+04.81 30.0'

+55.15 40.9'

0'-9"

* PROP 6" CONCRETE MEDIAN

EX CONCRETE MEDIAN (UIP)

END 1' GRASS SWALE
STA 18+47.55,
39.6' RT

℄ EXIST. BELLEFONTAINE RD

STA 17+98.89 ℄ EXIST. RAMP 2 =
STA 14+79.56 ℄ EXIST. BELLEFONTAINE RD

EX ROW

END MILL & OVERLAY MATCH EXISTING
STA 17+25.40
℄ EXIST. RAMP 2

END FULL DEPTH PAVEMENT
STA 14+41.52, 26.0' RT

BEGIN 1' GRASS SWALE
STA 14+79.66, 201.6' RT

TRANSITION SIDEWALK WIDTH
FROM 10'-0" TO 6'-0"
FROM STA 13+64.30 TO STA 14+04.81

15

END 1' FLAT BOTTOM PAVED DITCH
STA 13+64.30, 44.0' RT
EL. 478.64

BEGIN FULL DEPTH PAVEMENT
STA 12+37.10, 26.0' RT

TRANSITION FROM 6" CURB TO FULL HEIGHT TYPE D BARRIER
FROM STA 12+09.62, 41.6' RT TO STA 12+37.10, 30.0' RT

℄ EXIST. RAMP 2

* TYPE S CURB INCIDENTAL TO PROPOSED 6" CONCRETE MEDIAN

NOTE: ALL STATIONS AND OFFSETS ON THIS SHEET REFER TO ℄ EXIST. BELLEFONTAINE RD UNLESS OTHERWISE STATED

BELLEFONTAINE RD
ROADWAY PLAN
STA 8+00 TO STA 21+50
SHEET 1 OF 1

STATE OF MISSOURI
EUGENE LOUIS KUEBLER JR.
NUMBER PE-2010009912
PROFESSIONAL ENGINEER
THIS SHEET HAS BEEN SIGNED, SEALED, AND DATED ELECTRONICALLY.

DATE PREPARED 3/25/2026
ROUTE I-270 | STATE MO
DISTRICT SL | SHEET NO. 17
COUNTY ST. LOUIS
JOB NO. JSL0021
CONTRACT ID.
PROJECT NO.
BRIDGE NO.

DESCRIPTION | DATE

IF A SEAL IS PRESENT ON THIS SHEET IT HAS BEEN ELECTRONICALLY SEALED AND DATED.

MISSOURI HIGHWAYS AND TRANSPORTATION COMMISSION
105 WEST CAPITOL
JEFFERSON CITY, MO 65102
1-888-ASK-MODOT (1-888-275-6636)

HDR Engineering, Inc.
1001 Highlands Plaza Drive
Suite 200
St. Louis, MO 63110-1337
314-425-8300
Certificate of Authority: 000856

c:\pwworking\central01\d4324513\017_PL10_JSL0021_I50_Bellefontaine_Rd.dgn 9:00:22 AM 3/25/2026

I-270 OVER MO 367

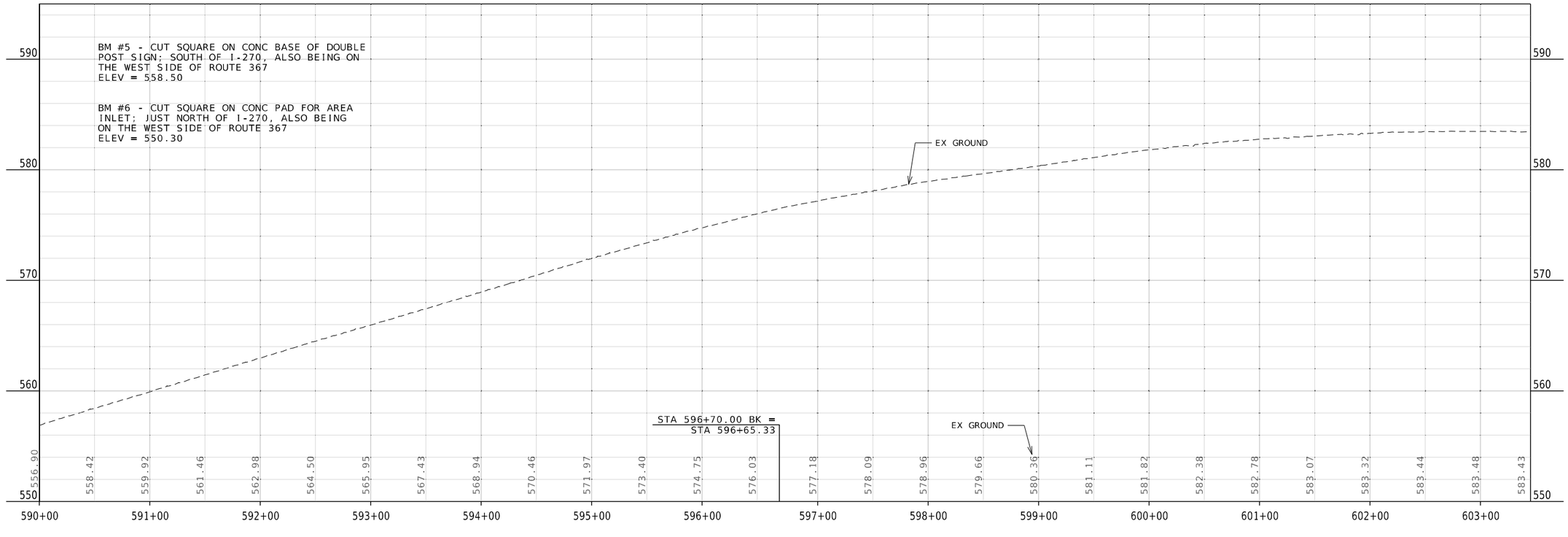

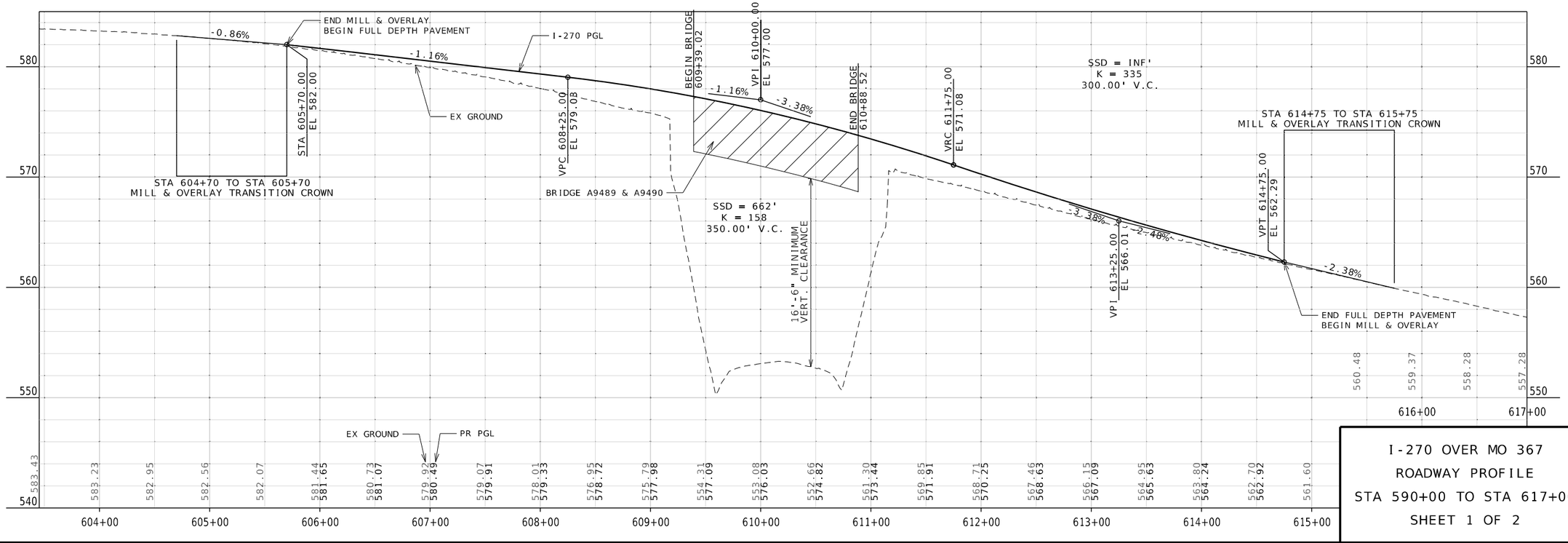

I-270 OVER MO 367
ROADWAY PROFILE
STA 590+00 TO STA 617+00
SHEET 1 OF 2

STATE OF MISSOURI
EUGENE LOUIS KUELKER JR.
NUMBER PE-2011009912
PROFESSIONAL ENGINEER

THIS SHEET HAS BEEN SIGNED, SEALED, AND DATED ELECTRONICALLY.

IF A SEAL IS PRESENT ON THIS SHEET IT HAS BEEN ELECTRONICALLY SEALED AND DATED.

DATE PREPARED: 3/25/2026

ROUTE	STATE
I-270	MO

DISTRICT	SHEET NO.
SL	18

COUNTY: ST. LOUIS

JOB NO.: JSL0021

CONTRACT ID.:

PROJECT NO.:

BRIDGE NO.:

DESCRIPTION	DATE

MISSOURI HIGHWAYS AND TRANSPORTATION COMMISSION
105 WEST CAPITOL
JEFFERSON CITY, MO 65102
1-888-ASK-MODOT (1-888-275-6636)

HDR Engineering, Inc.
1001 Highlands Plaza Drive
Suite 200
St. Louis, MO 63110-1337
314-425-8300
Certificate of Authority: 000856

I-270 OVER MO 367

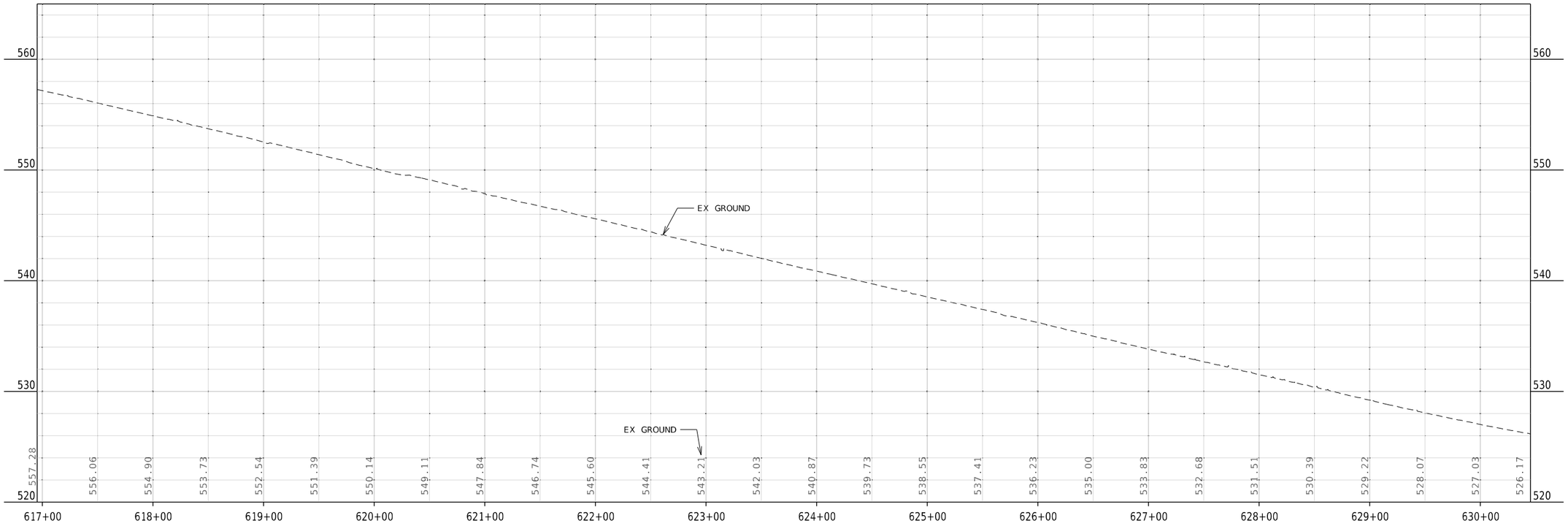

I-270 OVER MO 367
ROADWAY PROFILE
STA 617+00 TO STA 630+50
SHEET 2 OF 2

STATE OF MISSOURI
EUGENE LOUIS KUCUKER JR.
NUMBER PE-2011000912
PROFESSIONAL ENGINEER

THIS SHEET HAS BEEN SIGNED, SEALED, AND DATED ELECTRONICALLY.

DATE PREPARED: 3/25/2026
ROUTE: I-270 | STATE: MO
DISTRICT: SL | SHEET NO.: 19
COUNTY: ST. LOUIS
JOB NO.: JSL0021
CONTRACT ID.:
PROJECT NO.:
BRIDGE NO.:

DATE	DESCRIPTION

IF A SEAL IS PRESENT ON THIS SHEET IT HAS BEEN ELECTRONICALLY SEALED AND DATED.

MISSOURI HIGHWAYS AND TRANSPORTATION COMMISSION
105 WEST CAPITOL
JEFFERSON CITY, MO 65102
1-888-ASK-MODOT (1-888-275-6636)

HDR Engineering, Inc.
1001 Highlands Plaza Drive
Suite 200
St. Louis, MO 63110-1337
314-425-8300
Certificate of Authority: 000856

RAMP 8-D

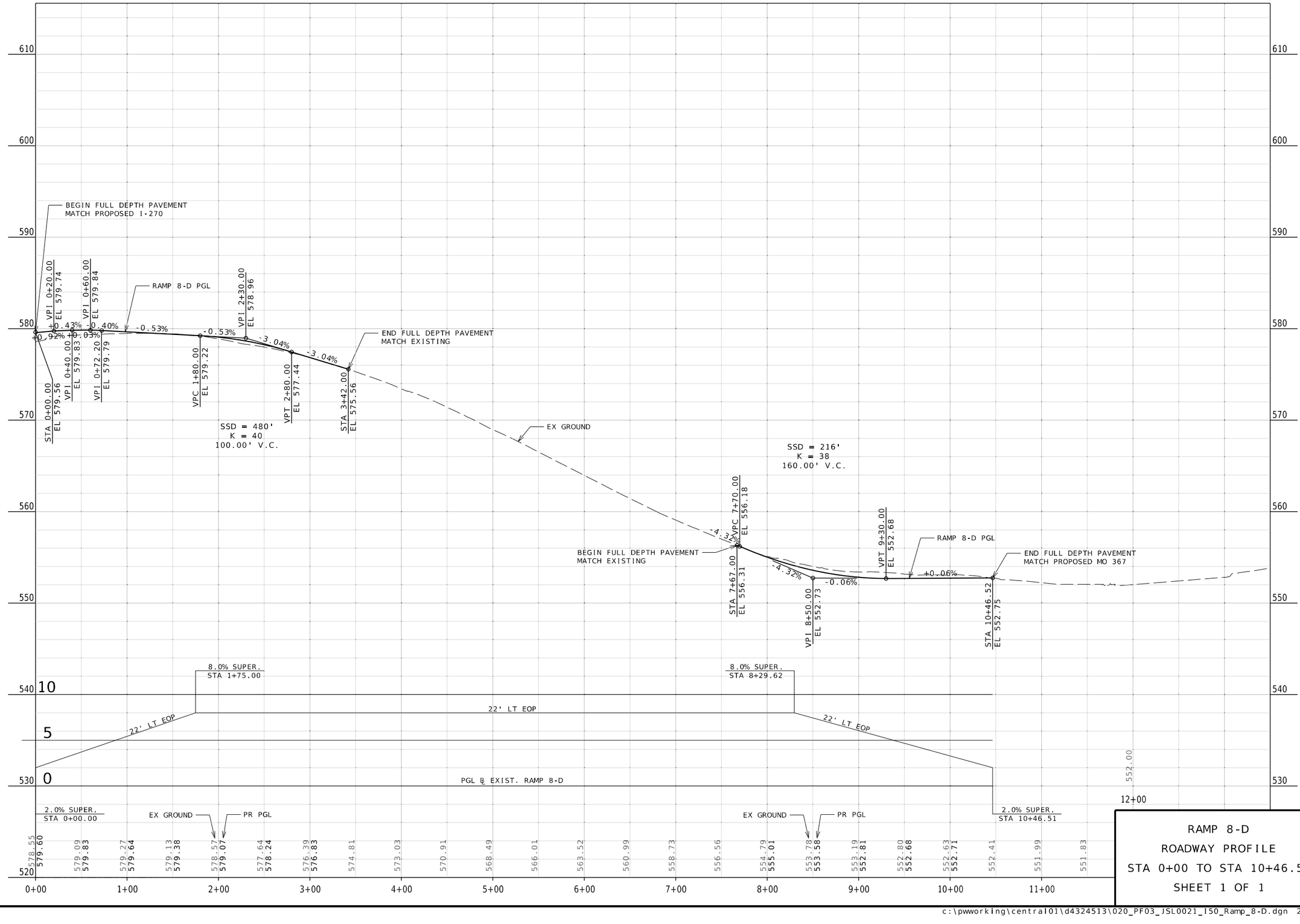

RAMP 8-D
ROADWAY PROFILE
STA 0+00 TO STA 10+46.51
SHEET 1 OF 1

HDR Engineering, Inc.
1001 Highlands Plaza Drive
Suite 200
St. Louis, MO 63110-1337
314-425-8300
Certificate of Authority: 000856

MISSOURI HIGHWAYS AND TRANSPORTATION COMMISSION
105 WEST CAPITOL
JEFFERSON CITY, MO 65102
1-888-ASK-MODOT (1-888-275-6636)

STATE OF MISSOURI
EUGENE LOUIS KUEKER JR.
NUMBER PE-2011002912
PROFESSIONAL ENGINEER

THIS SHEET HAS BEEN SIGNED, SEALED, AND DATED ELECTRONICALLY.

IF A SEAL IS PRESENT ON THIS SHEET IT HAS BEEN ELECTRONICALLY SEALED AND DATED.

DATE PREPARED	
3/25/2026	
ROUTE	STATE
I-270	MO
DISTRICT	SHEET NO.
SL	20
COUNTY	
ST. LOUIS	
JOB NO.	
JSL0021	
CONTRACT ID.	
PROJECT NO.	
BRIDGE NO.	

DATE	DESCRIPTION

I-270 OVER BELLEFONTAINE RD

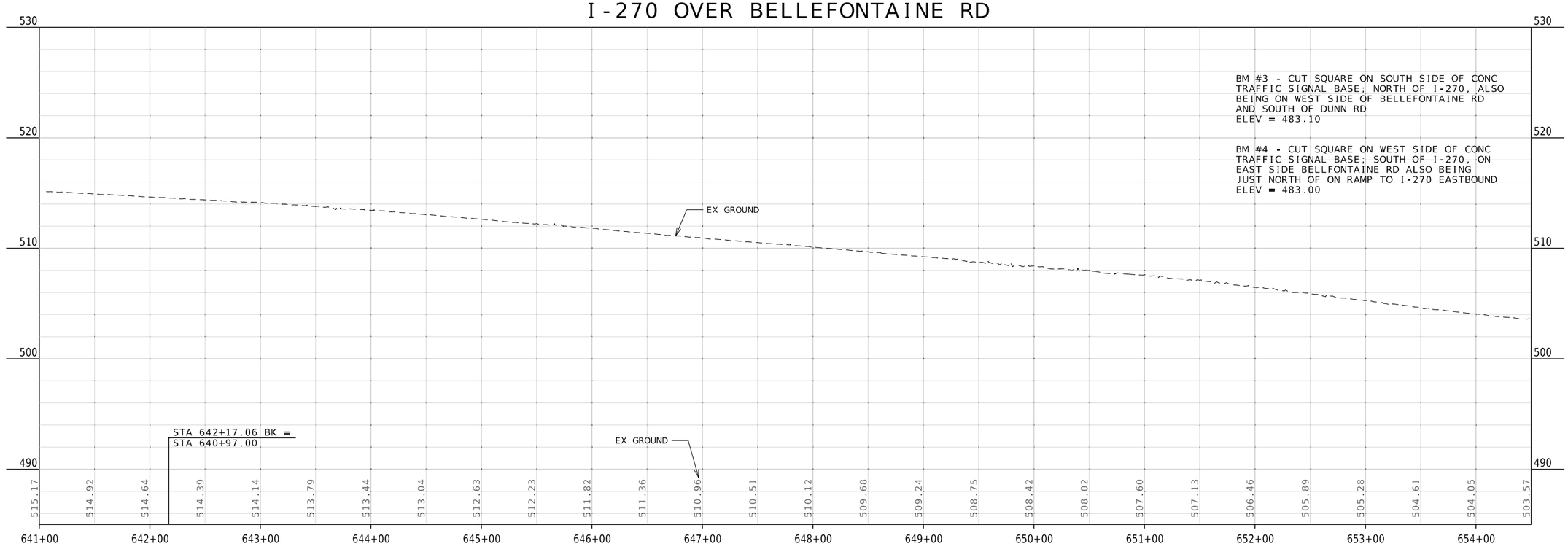

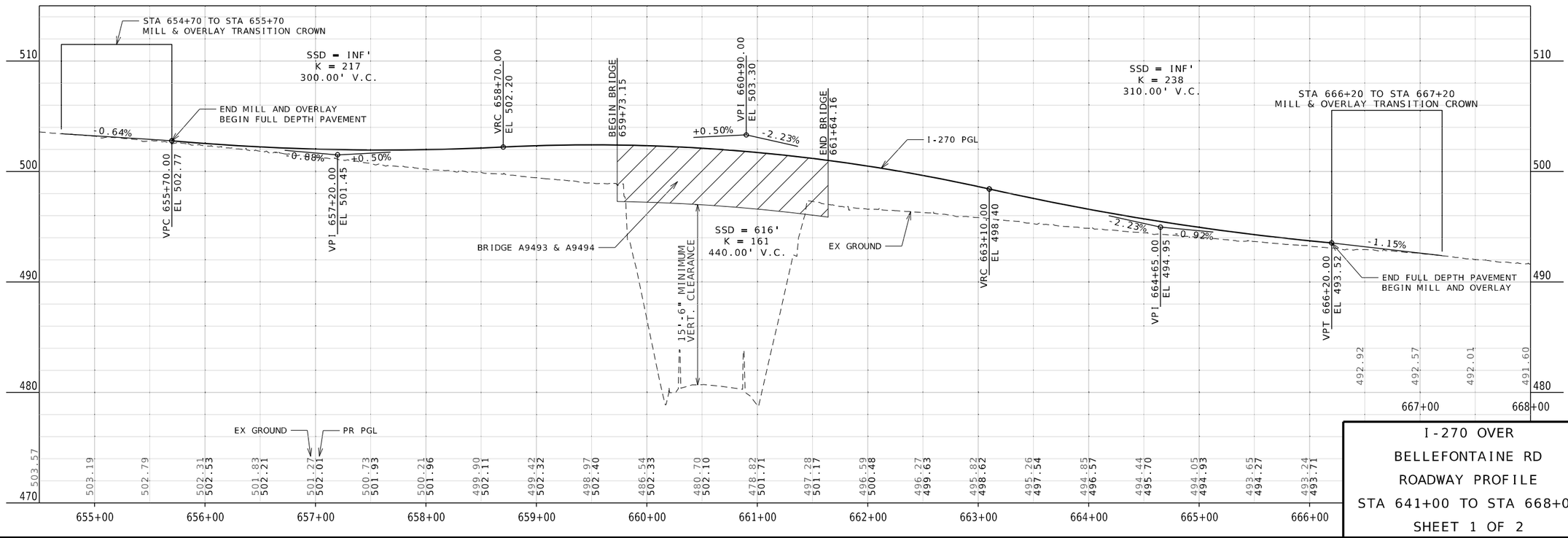

I-270 OVER
BELLEFONTAINE RD
ROADWAY PROFILE
STA 641+00 TO STA 668+00
SHEET 1 OF 2

STATE OF MISSOURI
EUGENE LOUIS KUELKER JR.
NUMBER PE-2011009912
PROFESSIONAL ENGINEER
THIS SHEET HAS BEEN SIGNED, SEALED, AND DATED ELECTRONICALLY.

IF A SEAL IS PRESENT ON THIS SHEET IT HAS BEEN ELECTRONICALLY SEALED AND DATED.

DATE PREPARED: 3/25/2026
ROUTE: I-270 | STATE: MO
DISTRICT: SL | SHEET NO.: 21
COUNTY: ST. LOUIS
JOB NO.: JSL0021
CONTRACT ID.:
PROJECT NO.:
BRIDGE NO.:

DESCRIPTION	DATE

MISSOURI HIGHWAYS AND TRANSPORTATION COMMISSION
105 WEST CAPITOL
JEFFERSON CITY, MO 65102
1-888-ASK-MODOT (1-888-275-6636)

HDR Engineering, Inc.
1001 Highlands Plaza Drive
Suite 200
St. Louis, MO 63110-1337
314-425-8300
Certificate of Authority: 000856

I-270 OVER BELLEFONTAINE RD

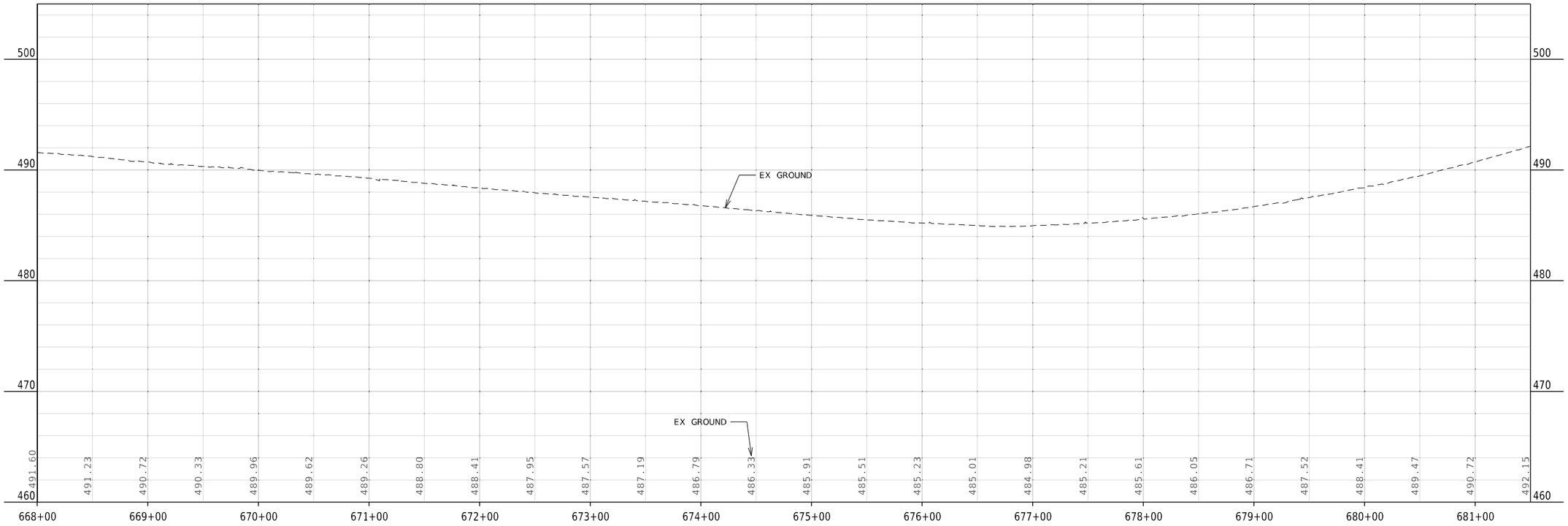

I-270 OVER
BELLEFONTAINE RD
ROADWAY PROFILE
STA 668+00 TO STA 681+50
SHEET 2 OF 2

THIS SHEET HAS BEEN SIGNED, SEALED, AND DATED ELECTRONICALLY.

DATE PREPARED
3/25/2026

ROUTE	STATE
I-270	MO
DISTRICT	SHEET NO.
SL	22

COUNTY
ST. LOUIS

JOB NO.
JSL0021

CONTRACT ID.

PROJECT NO.

BRIDGE NO.

DESCRIPTION	DATE

IF A SEAL IS PRESENT ON THIS SHEET IT HAS BEEN ELECTRONICALLY SEALED AND DATED.

MISSOURI HIGHWAYS AND TRANSPORTATION COMMISSION
105 WEST CAPITOL
JEFFERSON CITY, MO 65102
1-888-ASK-MODOT (1-888-275-6636)

HDR Engineering, Inc.
1001 Highlands Plaza Drive
Suite 200
St. Louis, MO 63110-1337
314-425-8300
Certificate of Authority: 000856

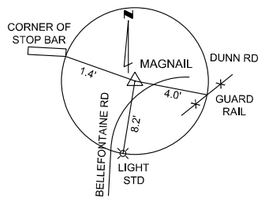

REFERENCE TIE

CONTROL POINT #1
N 1069465.807
E 899933.620
ELEV 480.30
STA 660+89.25, 84.6' LT
MAGNAIL IN ASPH; ON THE SOUTHEAST CORNER OF THE INTERSECTION OF DUNN RD AND BELLEFONTAINE RD, ON THE EAST SIDE OF BELLEFONTAINE RD

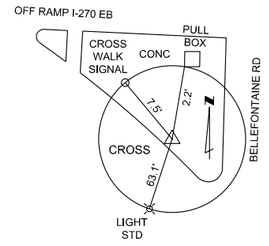

REFERENCE TIE

CONTROL POINT #2
N 1069215.931
E 899828.379
ELEV 482.34
STA 660+22.36, 181.7' RT
CROSS IN CONC; ON THE SOUTHWEST CORNER OF THE INTERSECTION OF I-270 OFF RAMP AND BELLEFONTAINE RD, ON THE WEST SIDE OF BELLEFONTAINE RD

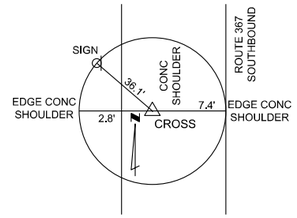

REFERENCE TIE

CONTROL POINT #5
N 1069294.135
E 894703.186
ELEV 559.84
STA 609+70.76, 378.4' RT
CROSS IN CONC; APPROX 380 FEET SOUTH OF THE INTERSECTION OF I-270 OVERPASS AND LEWIS AND CLARK BLVD, ON THE WEST SIDE OF LEWIS AND CLARK BLVD

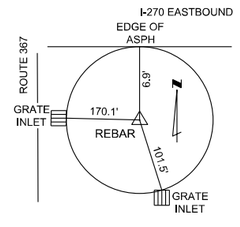

REFERENCE TIE

CONTROL POINT #6
N 1069610.540
E 895023.430
ELEV 565.78
STA 612+90.51, 61.5' RT
REBAR WITH CAP IN GRASS; APPROX 270 FEET EAST OF THE INTERSECTION OF I-270 OVERPASS AND LEWIS AND CLARK BLVD, ON THE SOUTH SIDE OF I-270

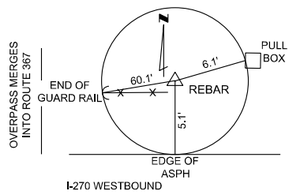

REFERENCE TIE

CONTROL POINT #7
N 1069729.119
E 895379.745
ELEV 556.80
STA 616+46.64, 57.6' LT
REBAR WITH CAP IN GRASS; APPROX 630 FEET EAST OF THE INTERSECTION OF I-270 OVERPASS AND LEWIS AND CLARK BLVD, ON THE NORTH SIDE OF I-270

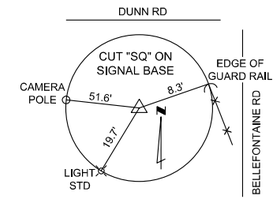

REFERENCE TIE

BM #3 - CUT SQUARE ON SOUTH SIDE OF CONC TRAFFIC SIGNAL BASE; NORTH OF I-270, ALSO BEING ON WEST SIDE OF BELLEFONTAINE RD AND SOUTH OF DUNN RD
STA 660+01.49, 85.8' LT
ELEV= 483.10

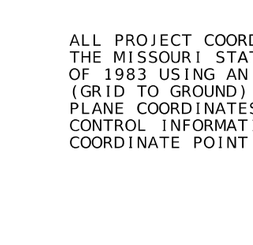

REFERENCE TIE

BM #4 - CUT SQUARE ON WEST SIDE OF CONC TRAFFIC SIGNAL BASE; SOUTH OF I-270, ON EAST SIDE BELLEFONTAINE RD ALSO BEING JUST NORTH OF ON RAMP TO I-270 EASTBOUND
STA 661+09.23, 481.5' RT
ELEV=483.00

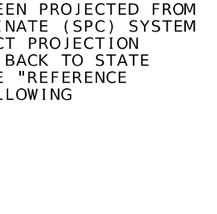

REFERENCE TIE

BM #5 - CUT SQUARE ON CONC BASE OF DOUBLE POST SIGN; SOUTH OF I-270, ALSO BEING ON THE WEST SIDE OF ROUTE 367
STA 609+52.02, 344.0' RT
ELEV= 558.50

REFERENCE TIE

BM #6 - CUT SQUARE ON CONC PAD FOR AREA INLET; JUST NORTH OF I-270, ALSO BEING ON THE WEST SIDE OF ROUTE 367
STA 609+57.42, 89.7' LT
ELEV= 550.30

ALL PROJECT COORDINATES HAVE BEEN PROJECTED FROM THE MISSOURI STATE PLANE COORDINATE (SPC) SYSTEM OF 1983 USING AN AVERAGE PROJECT PROJECTION (GRID TO GROUND) FACTOR.TO GET BACK TO STATE PLANE COORDINATES, REFER TO THE "REFERENCE CONTROL INFORMATION" ON THE FOLLOWING COORDINATE POINT SHEET.

REFERENCE POINTS
SHEET 1 OF 1

STATE OF MISSOURI
EUGENE LOUIS KUELKER JR.
NUMBER PE-2010009912
PROFESSIONAL ENGINEER
THIS SHEET HAS BEEN SIGNED, SEALED, AND DATED ELECTRONICALLY.

DATE PREPARED
3/25/2026

ROUTE	STATE
I-270	MO
DISTRICT	SHEET NO.
SL	23

COUNTY
ST. LOUIS

JOB NO.
JSL0021

CONTRACT ID.

PROJECT NO.

BRIDGE NO.

IF A SEAL IS PRESENT ON THIS SHEET IT HAS BEEN ELECTRONICALLY SEALED AND DATED.

DESCRIPTION	DATE

MISSOURI HIGHWAYS AND TRANSPORTATION COMMISSION
105 WEST CAPITOL
JEFFERSON CITY, MO 65102
1-888-ASK-MODOT (1-888-275-6636)

HDR Engineering, Inc.
1001 Highlands Plaza Drive
Suite 200
St. Louis, MO 63110-1337
314-425-8300
Certificate of Authority: 000856

ALL PROJECT COORDINATES HAVE BEEN PROJECTED FROM THE MISSOURI STATE PLANE COORDINATE (SPC) SYSTEM OF 1983 USING AN AVERAGE PROJECT PROJECTION (GRID TO GROUND) FACTOR. TO GET BACK TO STATE PLANE COORDINATES, MULTIPY THE PROJECT COORDINATES BY THE AVERAGE GRID FACTOR AS SHOWN IN THE "REFERENCE CONTROL INFORMATION" PORTION OF THIS TABLE.

PROJECT COORDINATE INFORMATION	
COORDINATE SYSTEM	Stateplane MO East FIPS 2401
HORIZONTAL DATUM	NAD 83
VERTICAL DATUM	NAVD 88
GEOID MODEL	Geoid 12B
ELEVATIONS DETERMINED BY	
PROJECT PROJECTION FACTOR	1.0000855

REFERENCE CONTROL INFORMATION	
COORDINATE SYSTEM	Stateplane MO East FIPS 2401
CONTROL STATION	MOOF
DESIGNATION	MODOT OFALLON CORS ARP
CORS_ID	MOOF
PID	DM4688
LATITUDE	38°45'14.06179
LONGITUDE	90°41'44.78025
NORTHING (M)	324131.1530
EASTING (M)	232983.4880
ZONE	2401
PROJECT AVERAGE GRID FACTOR	0.99991451

EXAMPLE OF PROJECT COORDINATE TO S.P.C.

PROJECT NORTHING X AVERAGE GRID FACTOR
= STATE PLANE NORTHING
PROJECT EASTING X AVERAGE GRID FACTOR
= STATE PLANE EASTING
EXAMPLE: CONTROL POINT #3
N 1083739.801 X 0.99991221 = N 1083644.659
E 713463.461 X 0.99991221 = E 713400.826

LINEAR UNIT CONVERSION

1 METER = 3.280833333 US SURVEY FEET (USFT)

COORDINATE POINT LISTING

SHEET NO	STATION	LOCATION	OFFSET (USFT)	MODIFIED STATE PLANE (GROUND) NORTHING (US SURVEY FT)	EASTING (US SURVEY FT)	ELEVATION (US SURVEY FT)	DESCRIPTION	POINT ID
PROJECT CONTROL POINTS								
6	660+01.49	LT	85.78'	1069485.28	899848.04	483.10	BM #3 - CUT SQUARE ON CONC	3
6	661+09.23	RT	481.49'	1069253.73	899908.80	483.00	BM #4 - CUT SQUARE ON CONC	4
4	609+52.02	RT	344.00'	1069328.59	894684.50	558.50	BM #5 - CUT SQUARE ON CONC	5
4	609+57.42	LT	89.71'	1069762.29	894690.58	550.30	BM #6 - CUT SQUARE ON CONC	6
6	660+89.25	LT	84.60'	1069465.81	899933.62	480.30	MAGNAIL IN ASPH	1
6	660+22.36	RT	181.74'	1069215.93	899828.38	482.34	CROSS IN CONC	2
4	609+70.76	RT	378.42'	1069294.14	894703.19	559.84	CROSS IN CONC	5
4	612+90.51	RT	61.52'	1069610.54	895023.43	565.78	REBAR WITH CAP IN GRASS	6
4	616+46.64	LT	57.61'	1069729.12	895379.75	556.80	REBAR WITH CAP IN GRASS	7
ALIGNMENTS								
4	590+00.00	EXIST. I-270	0.00'	1069681.15	892728.38		BEGINNING OF EXIST. CENTERLINE	
4	593+96.00	EXIST. I-270	0.00'	1069676.10	893124.35		BEGINNING OF PROJECT	
4	592+61.59	EXIST. I-270	0.00'	1069677.64	892989.94		P.C.	CURVE_EX_I-270_1
4	594+65.79	EXIST. I-270	0.00'	1069674.90	893194.13		P.I.	CURVE_EX_I-270_1
4	596+69.99	EXIST. I-270	0.00'	1069674.58	893398.33		P.T.	CURVE_EX_I-270_1
5	642+45.26	EXIST. I-270	0.00'	1069667.30	898098.33		P.C.	CURVE_EX_I-270_2
6	647+34.22	EXIST. I-270	0.00'	1069666.54	898587.28		P.I.	CURVE_EX_I-270_2
6	652+19.62	EXIST. I-270	0.00'	1069564.52	899065.48		P.T.	CURVE_EX_I-270_2
7	685+98.00	EXIST. I-270	0.00'	1068859.63	902369.50		END OF PROJECT	
7	697+00.00	EXIST. I-270	0.00'	1068629.70	903447.25		END OF EXIST. CENTERLINE	
4	517+00.00	EXIST. MO 367	0.00'	1070539.92	894746.33		BEGIN OF EXIST. CENTERLINE	
4	517+98.67	EXIST. MO 367	0.00'	1070441.26	894745.54		P.T.	CURVE_EX_MO_367
4	536+00.00	EXIST. MO 367	0.00'	1068639.95	894754.32		END OF EXIST. CENTERLINE	
6	3+00.00	EXIST. BELLEFONTAINE RD	0.00'	1070381.62	900042.69		BEGIN OF EXIST. CENTERLINE	
6	10+78.25	EXIST. BELLEFONTAINE RD	0.00'	1069613.77	899916.79		P.T.	CURVE_EX_BELLEFONTAINE_RD
6	21+92.07	EXIST. BELLEFONTAINE RD	0.00'	1068509.14	899773.98		END OF EXIST. CENTERLINE	
6	657+00.00	EXIST. DUNN RD	0.00'	1069701.37	899358.48		BEGIN OF EXIST. CENTERLINE	
6	658+50.17	EXIST. DUNN RD	0.00'	1069645.23	899497.76		P.C.	CURVE_EX_DUNN_RD
6	660+34.83	EXIST. DUNN RD	0.00'	1069570.83	899666.77		P.I.	CURVE_EX_DUNN_RD
6	662+18.20	EXIST. DUNN RD	0.00'	1069532.31	899847.36		P.T.	CURVE_EX_DUNN_RD
6	667+00.00	EXIST. DUNN RD	0.00'	1069431.78	900318.56		END OF EXIST. CENTERLINE	
4	0+00.00	EXIST. RAMP 8-D	0.00'	1069727.90	894487.05		BEGINNING OF EXIST. BASELINE, P.C.	CURVE_EX_RAMP8D_1
4	0+74.32	EXIST. RAMP 8-D	0.00'	1069727.87	894412.73		P.I.	CURVE_EX_RAMP8D_1
4	1+45.85	EXIST. RAMP 8-D	0.00'	1069761.74	894346.57		P.C.C.	CURVE_EX_RAMP8D_1
4	4+90.06	EXIST. RAMP 8-D	0.00'	1069918.59	894040.18		P.I.	CURVE_EX_RAMP8D_2
4	5+37.88	EXIST. RAMP 8-D	0.00'	1070080.74	894343.79		P.C.C.	CURVE_EX_RAMP8D_2
4	6+69.62	EXIST. RAMP 8-D	0.00'	1070142.81	894460.00		P.I.	CURVE_EX_RAMP8D_3
4	7+83.02	EXIST. RAMP 8-D	0.00'	1070089.40	894580.44		P.C.C.	CURVE_EX_RAMP8D_3
4	8+06.55	EXIST. RAMP 8-D	0.00'	1070079.86	894601.95		P.I.	CURVE_EX_RAMP8D_4
4	8+29.62	EXIST. RAMP 8-D	0.00'	1070063.60	894618.97		P.C.C.	CURVE_EX_RAMP8D_4
4	9+44.30	EXIST. RAMP 8-D	0.00'	1069984.38	894701.90		P.I.	CURVE_EX_RAMP8D_5
4	10+46.52	EXIST. RAMP 8-D	0.00'	1069869.69	894702.46		P.T., END OF EXIST. BASELINE	CURVE_EX_RAMP8D_5
5	0+00.00	EXIST. RAMP 2	0.00'	1069625.26	898125.18		BEGINNING OF EXIST. BASELINE, P.C.	CURVE_EX_RAMP2_1
6	1+90.89	EXIST. RAMP 2	0.00'	1069624.87	898316.07		P.I.	CURVE_EX_RAMP2_1
6	3+81.22	EXIST. RAMP 2	0.00'	1069599.16	898505.23		P.T.	CURVE_EX_RAMP2_1
6	5+82.60	EXIST. RAMP 2	0.00'	1069572.03	898704.77		P.C.	CURVE_EX_RAMP2_2
6	8+19.98	EXIST. RAMP 2	0.00'	1069540.05	898939.99		P.I.	CURVE_EX_RAMP2_2
6	10+55.74	EXIST. RAMP 2	0.00'	1069461.55	899164.00		P.T.	CURVE_EX_RAMP2_2
6	17+98.89	EXIST. RAMP 2	0.00'	1069215.77	899865.33		END OF EXIST. BASELINE	
6	0+00.00	EXIST. RAMP 4	0.00'	1069215.77	899865.34		BEGINNING OF EXIST. BASELINE	
6	7+79.06	EXIST. RAMP 4	0.00'	1069157.59	900642.22		P.C.	CURVE_EX_RAMP_4
6	8+90.10	EXIST. RAMP 4	0.00'	1069149.29	900752.95		P.I.	CURVE_EX_RAMP_4
7	10+00.80	EXIST. RAMP 4	0.00'	1069126.13	900861.55		P.T.	CURVE_EX_RAMP_4
7	16+40.80	EXIST. RAMP 4	0.00'	1069004.39	901489.66		END OF EXIST. BASELINE	
4	610+16.27	EXIST. I-270	0.00'	1069672.49	894749.28		I-270/MO 367 INTERSECTION POINT	
6	660+60.39	EXIST. I-270	0.00'	1069389.10	899887.74		I-270/BELLEFONTAINE RD INTERSECTION POINT	

COORDINATE POINT SHEET
SHEET 1 OF 1

STATE OF MISSOURI
EUGENE LOUIS KUEKER JR.
NUMBER PE-2010009912
PROFESSIONAL ENGINEER
THIS SHEET HAS BEEN SIGNED, SEALED, AND DATED ELECTRONICALLY.

DATE PREPARED: 3/25/2026
ROUTE: I-270 | STATE: MO
DISTRICT: SL | SHEET NO.: 24
COUNTY: ST. LOUIS
JOB NO.: JSL0021
CONTRACT ID.:
PROJECT NO.:
BRIDGE NO.:

DESCRIPTION | DATE

IF A SEAL IS PRESENT ON THIS SHEET IT HAS BEEN ELECTRONICALLY SEALED AND DATED.

MISSOURI HIGHWAYS AND TRANSPORTATION COMMISSION
105 WEST CAPITOL
JEFFERSON CITY, MO 65102
1-888-ASK-MODOT (1-888-275-6636)

HDR Engineering, Inc.
1001 Highlands Plaza Drive
Suite 200
St. Louis, MO 63110-1337
314-425-8300
Certificate of Authority: 000856

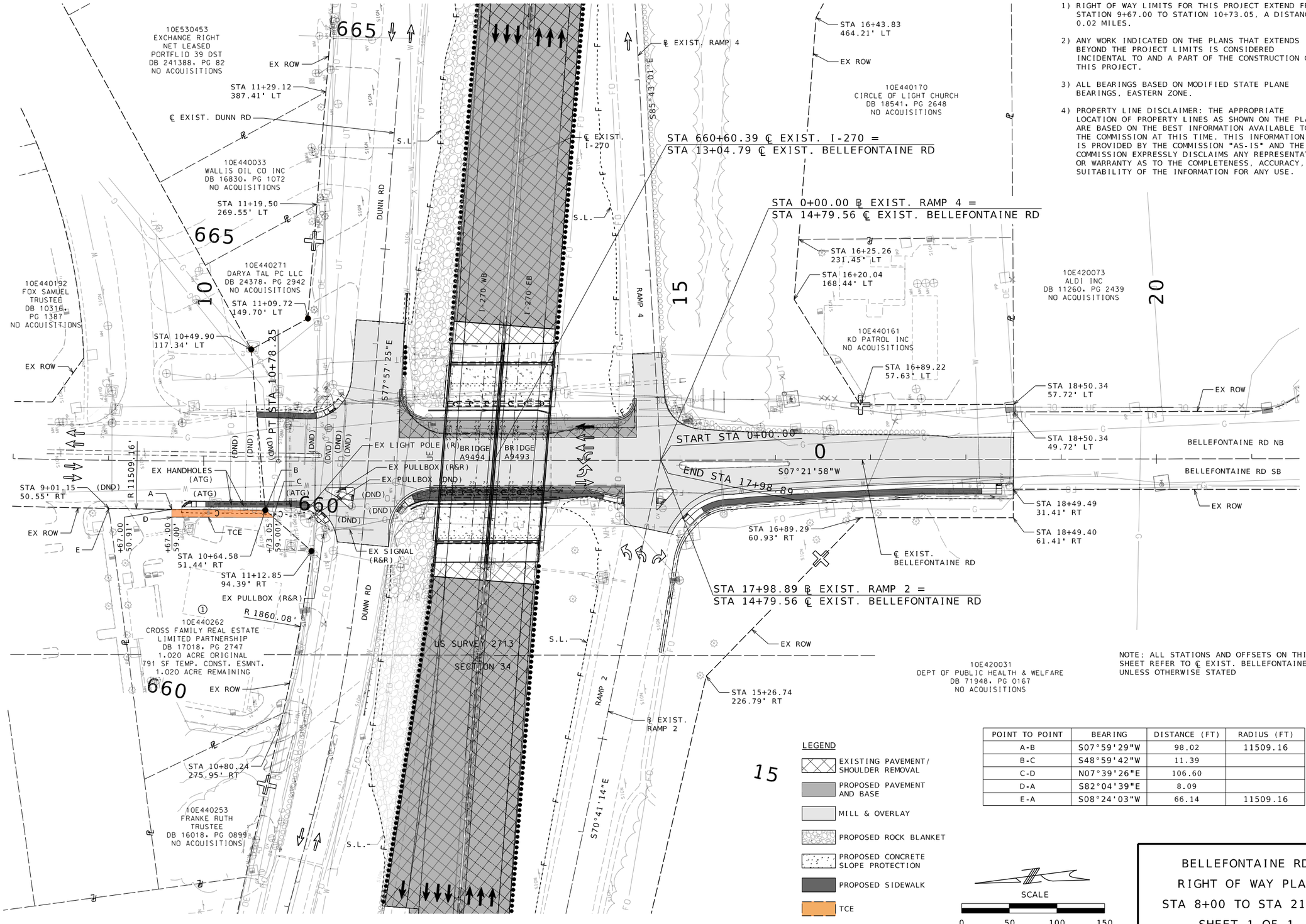

NOTES:

1) RIGHT OF WAY LIMITS FOR THIS PROJECT EXTEND FROM STATION 9+67.00 TO STATION 10+73.05, A DISTANCE OF 0.02 MILES.

2) ANY WORK INDICATED ON THE PLANS THAT EXTENDS BEYOND THE PROJECT LIMITS IS CONSIDERED INCIDENTAL TO AND A PART OF THE CONSTRUCTION OF THIS PROJECT.

3) ALL BEARINGS BASED ON MODIFIED STATE PLANE BEARINGS, EASTERN ZONE.

4) PROPERTY LINE DISCLAIMER: THE APPROPRIATE LOCATION OF PROPERTY LINES AS SHOWN ON THE PLANS ARE BASED ON THE BEST INFORMATION AVAILABLE TO THE COMMISSION AT THIS TIME. THIS INFORMATION IS PROVIDED BY THE COMMISSION "AS-IS" AND THE COMMISSION EXPRESSLY DISCLAIMS ANY REPRESENTATION OR WARRANTY AS TO THE COMPLETENESS, ACCURACY, OR SUITABILITY OF THE INFORMATION FOR ANY USE.

NOTE: ALL STATIONS AND OFFSETS ON THIS SHEET REFER TO ℄ EXIST. BELLEFONTAINE RD UNLESS OTHERWISE STATED

LEGEND

- EXISTING PAVEMENT/ SHOULDER REMOVAL
- PROPOSED PAVEMENT AND BASE
- MILL & OVERLAY
- PROPOSED ROCK BLANKET
- PROPOSED CONCRETE SLOPE PROTECTION
- PROPOSED SIDEWALK
- TCE

POINT TO POINT	BEARING	DISTANCE (FT)	RADIUS (FT)
A-B	S07°59'29"W	98.02	11509.16
B-C	S48°59'42"W	11.39	
C-D	N07°39'26"E	106.60	
D-A	S82°04'39"E	8.09	
E-A	S08°24'03"W	66.14	11509.16

SCALE

0 50 100 150

BELLEFONTAINE RD
RIGHT OF WAY PLAN
STA 8+00 TO STA 21+50
SHEET 1 OF 1

STATE OF MISSOURI
EUGENE LOUIS KUEKER JR.
NUMBER PE-2010000912
PROFESSIONAL ENGINEER

THIS SHEET HAS BEEN SIGNED, SEALED, AND DATED ELECTRONICALLY.

DATE PREPARED 3/25/2026

ROUTE	STATE
I-270	MO
DISTRICT	SHEET NO.
SL	25

COUNTY: ST. LOUIS
JOB NO.: JSL0021
CONTRACT ID.:
PROJECT NO.:
BRIDGE NO.:

DATE	DESCRIPTION

IF A SEAL IS PRESENT ON THIS SHEET IT HAS BEEN ELECTRONICALLY SEALED AND DATED.

MISSOURI HIGHWAYS AND TRANSPORTATION COMMISSION
105 WEST CAPITOL
JEFFERSON CITY, MO 65102
1-888-ASK-MODOT (1-888-275-6636)

HDR Engineering, Inc.
1001 Highlands Plaza Drive
Suite 200
St. Louis, MO 63110-1337
314-425-8300
Certificate of Authority: 000856

NOTE: ALL STATIONS AND OFFSETS ON THIS SHEET REFER TO ℄ EXIST. BELLEFONTAINE RD.

SEE SPECIAL SHEET "ADA CURB RAMP PAY LIMITS" FOR ADDITIONAL DETAILS.

* TYPE S CURB INCIDENTAL TO PROPOSED 6" CONCRETE MEDIAN

EX ROW

EX. CURB (R&R)

S.L.

6'

+11 45.7'

+20 50.2'

+32 62.5'

BLENDED TRANSITION RAMP (SEE STANDARD PLANS)

18 IN. WHITE ISLAND TUBULAR MARKER

+28 31.0'

R 1.5'

+29 28.1'

12.8'

13.6'

* PROPOSED 6" CONCRETE MEDIAN MATCH EXISTING

TYP. 6'

7.6'

+54 50.3'

13.5'

R 1'

+56 27.9'

7.9'

5.7'

R 2'

+56 49.7'

+58 30.2'

18 IN. WHITE ISLAND TUBULAR MARKER

18 IN. WHITE ISLAND TUBULAR MARKER

DUNN RD

℄ EXIST. DUNN RD

EX. CONCRETE MEDIAN (UIP)

18 IN. YELLOW ISLAND TUBULAR MARKER

℄ EXIST. BELLEFONTAINE RD

EX. CURB (R&R)

S.L.

6'

+19 44.9'

+29 47.8'

TYPE 1 PARALLEL RAMP (SEE STANDARD PLANS)

6'

+46 61.5'

EX ROW

SCALE

0 10 20 30

STA 662+76.80 ℄ EXIST. DUNN RD =
STA 11+72.72 ℄ EXIST. BELLEFONTAINE RD

+07.95
75.1' LT
℄ EXIST. BELLEFONTAINE RD

S.L.

+01 52.2'

BLENDED TRANSITION RAMP (SEE STANDARD PLANS)

+10 41.6'

+18 35.9'

BELLEFONTAINE RD

480.45'
480.41'
480.37'
480.31'
480.23'
480.15'
480.07'
480.00'
479.96'
479.93'

1/10Δ
2/10Δ
3/10Δ
4/10Δ
5/10Δ
6/10Δ
7/10Δ
8/10Δ
9/10Δ
10/10Δ
Δ1

Δ1
R = 28'
Δ = 96°17'07"
L = 47.05'

+35.78
44.0' LT
℄ EXIST.
BELLEFONTAINE RD

I-270 WB

℄ EXIST.
BELLEFONTAINE RD

STA. 9+77.71
48.3' RT

LARGE RADIUS PERPENDICULAR RAMP (SEE STANDARD PLANS)

STA. 9+92.32
42.3' RT

STA. 10+02.28
42.2' RT

6'

BELLEFONTAINE RD

SCALE

0 10 20 30

SPECIAL SHEET
INTERSECTION DETAILS
BELLEFONTAINE RD
AND DUNN RD
SHEET 1 OF 1

STATE OF MISSOURI
EUGENE LOUIS KUEKER JR.
NUMBER PE-2011002912
PROFESSIONAL ENGINEER

THIS SHEET HAS BEEN SIGNED, SEALED, AND DATED ELECTRONICALLY.

IF A SEAL IS PRESENT ON THIS SHEET IT HAS BEEN ELECTRONICALLY SEALED AND DATED.

DATE PREPARED	3/25/2026
ROUTE	I-270
STATE	MO
DISTRICT	SL
SHEET NO.	26
COUNTY	ST. LOUIS
JOB NO.	JSL0021
CONTRACT ID.	
PROJECT NO.	
BRIDGE NO.	

DESCRIPTION	DATE

MISSOURI HIGHWAYS AND TRANSPORTATION COMMISSION

105 WEST CAPITOL
JEFFERSON CITY, MO 65102
1-888-ASK-MODOT (1-888-275-6636)

HDR Engineering, Inc.
1001 Highlands Plaza Drive
Suite 200
St. Louis, MO 63110-1337
314-425-8300
Certificate of Authority: 000856

STA. 18+16.50
30.4' RT

STA. 18+31.55
25.4' RT

COMPUND
PERPENDICULAR RAMP
(SEE STANDARD PLANS)

STA. 18+37.55
25.5' RT

℄ EXIST.
BELLEFONTAINE RD

BELLEFONTAINE RD

S.L.

+05

6'

+20
35.1'

+35
38.7'

+42
40.2'

SMALL RADIUS
PERPENDICULAR RAMP
(SEE STANDARD PLANS)

SCALE
0 10 20 30

BELLEFONTAINE RD

+32.19
44.00' LT
℄ EXIST.
BELLEFONTAINE RD

480.22'

480.35'

480.64'

480.93'

481.06'

1/5Δ
2/5Δ
3/5Δ
4/5Δ
5/5Δ
Δ1

Δ1
R = 20'
Δ = 92°26'03"
L = 32.27'

SCALE
0 10 20 30

S.L.

RAMP 2

℄ EXIST. RAMP 2

STA 17+98.89 ℄ EXIST. RAMP 2 =
STA 14+79.56 ℄ EXIST. BELLEFONTAINE RD

+75
51.1'

5.7'

+75
32.0'

7.4'

18 IN. WHITE
ISLAND TUBULAR
MARKER

R 2'

* PROPOSED 6"
CONCRETE MEDIAN
MATCH EXISTING

R 1'

+77
30.1'

18 IN. WHITE
ISLAND TUBULAR
MARKER

+76
51.8'

7.5'

6'
TYP.

11.1'

13.7'

+91
30.1'

+02
60.5'

+07
55.5'

+93
33.4'

R 2'

18 IN. WHITE
ISLAND TUBULAR
MARKER

* PROPOSED 6"
CONCRETE MEDIAN
MATCH EXISTING

18 IN. YELLOW ISLAND
TUBULAR MARKER

COMPOUND PERPENDICULAR RAMP
(SEE STANDARD PLANS)

+22
49.7'

6'

EX. CONCRETE
MEDIAN (UIP)

℄ EXIST.
BELLEFONTAINE RD

+55
40.9'

6'

RAMP 4

+52.17
64.8' LT
℄ EXIST.
BELLEFONTAINE RD

℄ EXIST. RAMP 4

STA 0+00.00 ℄ EXIST. RAMP 4 =
STA 14+79.56 ℄ EXIST. BELLEFONTAINE RD

NOTE: ALL STATIONS AND OFFSETS ON THIS SHEET REFER TO ℄ EXIST. BELLEFONTAINE RD.

SEE SPECIAL SHEET "ADA CURB RAMP PAY LIMITS" FOR ADDITIONAL DETAILS.

* TYPE S CURB INCIDENTAL TO PROPOSED 6" CONCRETE MEDIAN

SPECIAL SHEET
INTERSECTION DETAILS
BELLEFONTAINE RD
AND RAMPS 2 & 4
SHEET 1 OF 1

STATE OF MISSOURI
EUGENE LOUIS KUEKER JR.
NUMBER PE-2010009912
PROFESSIONAL ENGINEER

THIS SHEET HAS BEEN SIGNED, SEALED, AND DATED ELECTRONICALLY.

IF A SEAL IS PRESENT ON THIS SHEET IT HAS BEEN ELECTRONICALLY SEALED AND DATED.

DATE PREPARED
3/25/2026

ROUTE	STATE
I-270	MO
DISTRICT	SHEET NO.
SL	27

COUNTY
ST. LOUIS

JOB NO.
JSL0021

CONTRACT ID.

PROJECT NO.

BRIDGE NO.

DESCRIPTION	DATE

MISSOURI HIGHWAYS AND TRANSPORTATION COMMISSION

105 WEST CAPITOL
JEFFERSON CITY, MO 65102
1-888-ASK-MODOT (1-888-275-6636)

HDR Engineering, Inc.
1001 Highlands Plaza Drive
Suite 200
St. Louis, MO 63110-1337
314-425-8300
Certificate of Authority: 000856

PEDESTRIAN CURB RAMP PAY LIMITS

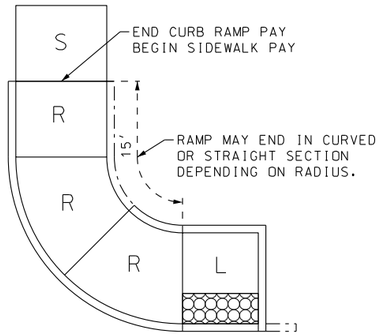

TYPE 1 PARALLEL

THE LENTH OF THIS RAMP SHALL BE MEASURED
ON THE INSIDE/SHORT SIDE OF THE CURVE

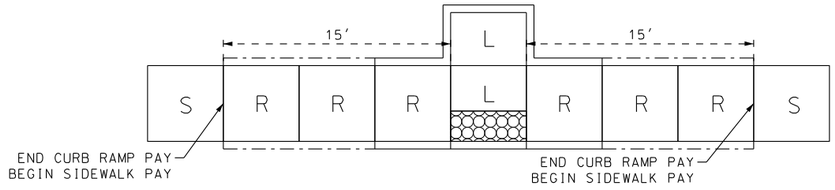

TYPE 2 PARALLEL

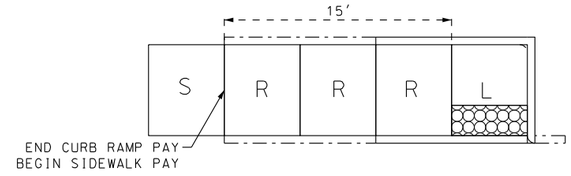

TYPE 3 PARALLEL

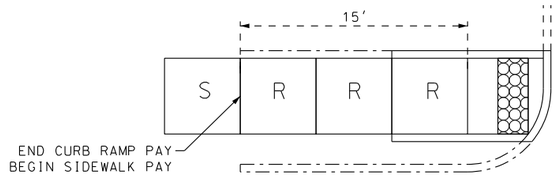

SMALL RADIUS PERPENDICULAR

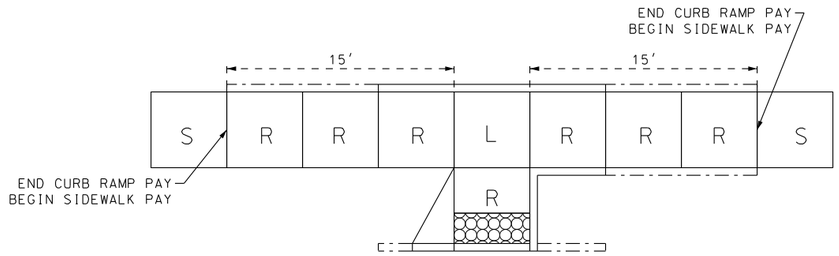

COMPOUND PERPENDICULAR

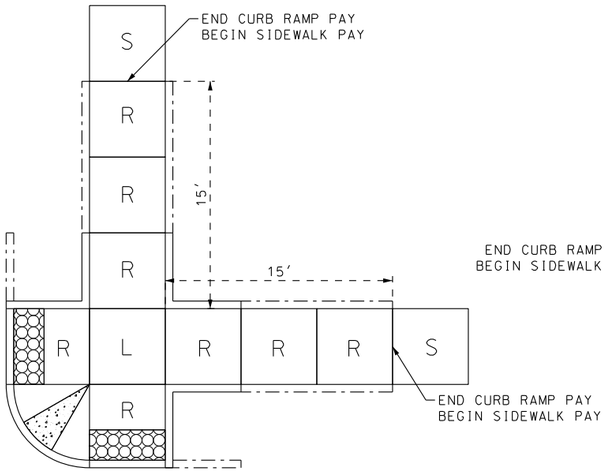

DUAL PERPENDICULAR
PAY AS 2 EACH

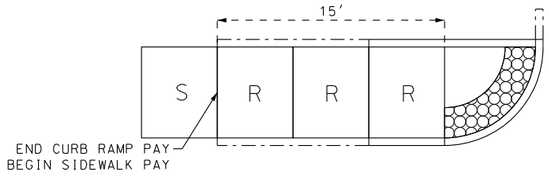

LARGE RADIUS PERPENDICULAR

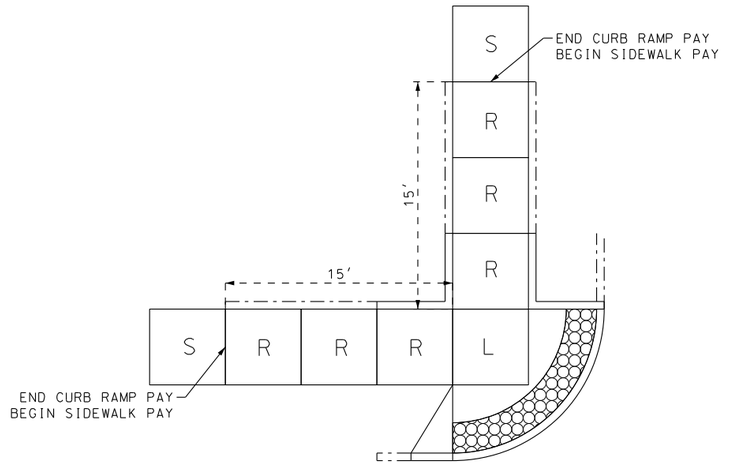

BLENDED TRANSITION
PAY AS 2 EACH

Notes -
15 FEET OF WALKWAY SHALL BE INCLUDED IN CURB RAMP PAY, PER EACH, AS SHOWN.

L - LANDING OR CLEAR AREA FOR TURNING MOVEMENTS AND RESTS.
R - PAY AS RAMP
S - PAY AS SIDEWALK.

SEE JSP FOR OTHER INCIDENTALS INCLUDED IN CURB RAMP PAY.
SEE STANDARD PLANS 608 SERIES FOR DIMENTIONS, GRADES, AND OTHER REQUIREMENTS.
CONTRACTOR WILL HAVE OPTION TO CONSTRUCT RAMP WITH FLARE OR CURB FOR CERTAIN RAMPS ABOVE.

DISCLAIMER
THE PROFESSIONAL WHOSE SIGNATURE AND PERSONAL SEAL APPEAR HEREON ASSUMES RESPONSIBILITY ONLY FOR WHAT APPEARS ON THIS PAGE, AND DISCLAIMS (PURSUANT TO SECTION 327.411 RSMO) SPECIFICATION, ESTIMATES, REPORTS, OR OTHER DOCUMENTS OR INSTRUMENTS NOT SEALED BY THE UNDERSIGNED PROFESSIONAL RELATING TO OR INTENDED TO BE USED FOR ANY PART OR PARTS OF THE PROJECT TO WHICH THIS PAGE REFERS.

SPECIAL SHEETS
ADA CURB RAMP PAY LIMITS
SHEET 1 OF 1

STATE OF MISSOURI
EUGENE LOUIS KUELKER JR.
NUMBER PE-2011000912
PROFESSIONAL ENGINEER

THIS SHEET HAS BEEN SIGNED, SEALED, AND DATED ELECTRONICALLY.

DATE PREPARED 3/25/2026
ROUTE I-270 | STATE MO
DISTRICT SL | SHEET NO. 28
COUNTY ST. LOUIS
JOB NO. JSL0021
CONTRACT ID.
PROJECT NO.
BRIDGE NO.

DESCRIPTION | DATE

IF A SEAL IS PRESENT ON THIS SHEET IT HAS BEEN ELECTRONICALLY SEALED AND DATED.

MISSOURI HIGHWAYS AND TRANSPORTATION COMMISSION
105 WEST CAPITOL
JEFFERSON CITY, MO 65102
1-888-ASK-MODOT (1-888-275-6636)

HDR Engineering, Inc.
1001 Highlands Plaza Drive
Suite 200
St. Louis, MO 63110-1337
314-425-8300
Certificate of Authority: 000856

c:\pwworking\central01\d4324513\028_SS03_JSL0021_I1.dgn 12:51:32 PM 3/25/2026

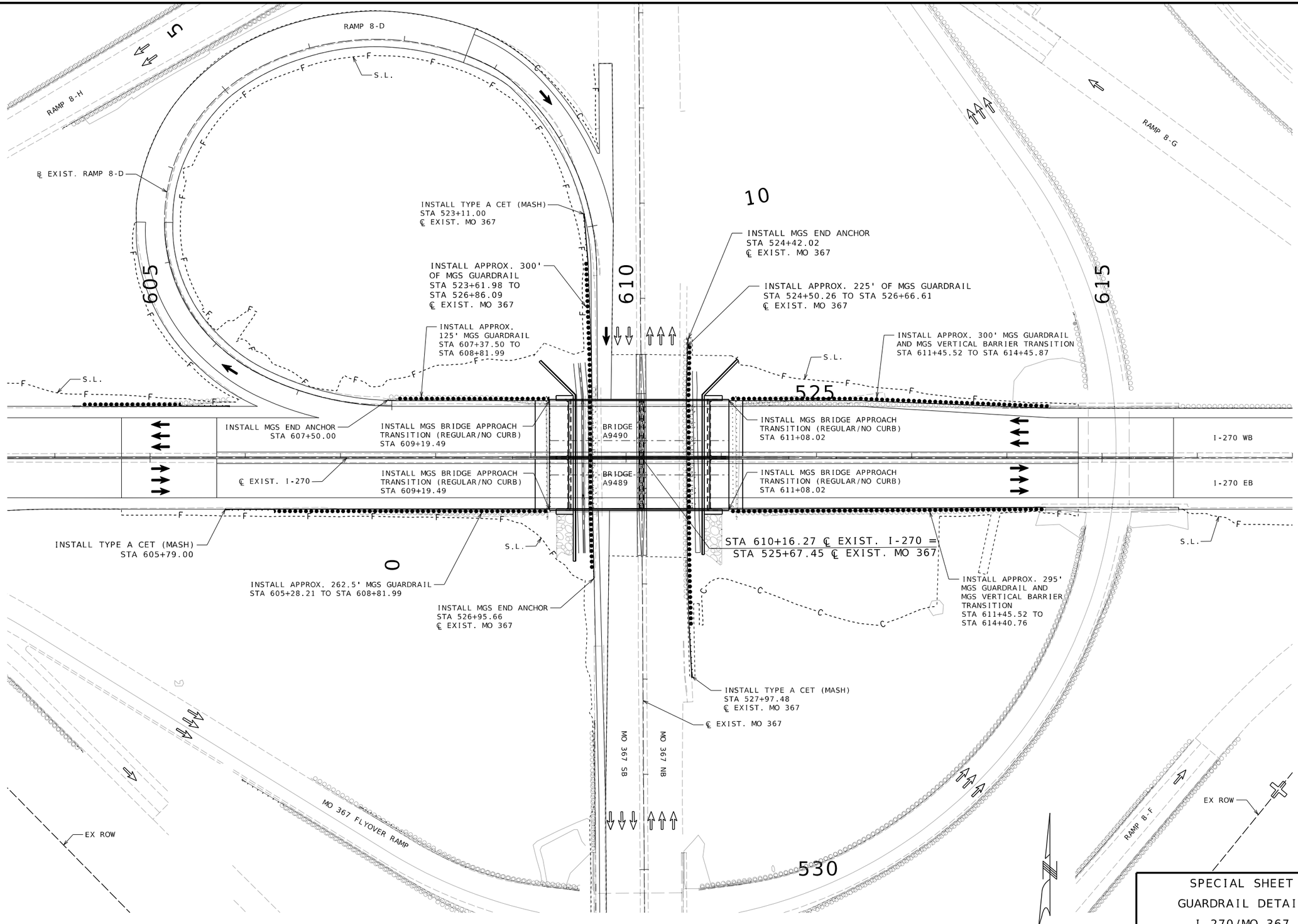

SPECIAL SHEET
GUARDRAIL DETAIL
I-270/MO 367
STA 603+50 TO STA 617+00
SHEET 1 OF 1

STATE OF MISSOURI
EUGENE LOUIS KUEKER JR.
NUMBER PE-2010009912
PROFESSIONAL ENGINEER

THIS SHEET HAS BEEN SIGNED, SEALED, AND DATED ELECTRONICALLY.

IF A SEAL IS PRESENT ON THIS SHEET IT HAS BEEN ELECTRONICALLY SEALED AND DATED.

DATE PREPARED	
3/25/2026	
ROUTE	STATE
I-270	MO
DISTRICT	SHEET NO.
SL	29
COUNTY	
ST. LOUIS	
JOB NO.	
JSL0021	
CONTRACT ID.	
PROJECT NO.	
BRIDGE NO.	

DATE	DESCRIPTION

MISSOURI HIGHWAYS AND TRANSPORTATION COMMISSION
105 WEST CAPITOL
JEFFERSON CITY, MO 65102
1-888-ASK-MODOT (1-888-275-6636)

HDR Engineering, Inc.
1001 Highlands Plaza Drive
Suite 200
St. Louis, MO 63110-1337
314-425-8300
Certificate of Authority: 000856

10E440060
HUSTON KENNETH L ETAL
DB 6882, PG 1345

10E440262
CROSS FAMILY REAL ESTATE
LIMITED PARTNERSHIP
DB 17018, PG 2747

10E440253
FRANKE RUTH
TRUSTEE
DB 16018, PG 0899

10E440033
WALLIS OIL CO INC
DB 16830, PG 1072

10E440024
WALLIS OIL CO INC
DB 16845, PG 0689

10E530114
AMI KUSH INC
DB 20965, PG 1096

10E530282
WALLIS OIL CO INC
DB 18177, PG 0633

10E530051
D&T COLE
PROPERTIES LLC
DB 17196, PG 2965

10E530444
RJCA LLC
DB 22216, PG 796

10E420031
DEPT OF PUBLIC HEALTH & WELFARE
DB 71948, PG 0167

10E440161
JOE'S SPH LLC
DB 20448, PG 1133

10E440170
CIRCLE OF LIGHT CHURCH
DB 18541, PG 2648

EX ROW

BELLEFONTAINE RD SB

BELLEFONTAINE RD NB

SECTION 34
US SURVEY 2713

DUNN RD

S68°02'41"E

S77°57'25"E

S70°41'14"E

S85°43'01"E

S07°21'58"W

RAMP 2

RAMP 4

S.L.

℄ EXIST. DUNN RD

℄ EXIST. RAMP 2

℄ EXIST. RAMP 4

℄ EXIST. BELLEFONTAINE RD

℄ EXIST. I-270

R 28'

R 20'

INSTALL APPROX. 365' MGS GUARDRAIL TIE INTO EXISTING STA 655+85.00 TO STA 659+11.77

INSTALL MGS BRIDGE APPROACH TRANSITION (REGULAR/NO CURB) STA 659+49.27

INSTALL APPROX. 512.5' MGS GUARDRAIL AND TYPE A CET (MASH) STA 654+11.12 TO STA 659+20.53

INSTALL MGS BRIDGE APPROACH TRANSITION (REGULAR/NO CURB) STA 659+58.03

INSTALL MGS VERTICAL BARRIER TRANSITION STA 663+66.84 ℄ EXIST. DUNN RD

INSTALL TYPE A CET (MASH) STA 664+04.29, ℄ EXIST. DUNN RD

INSTALL APPROX. 1398' MGS GUARDRAIL AND TYPE A CET (MASH) STA 662+16.78 TO STA 676+14.80

STA 668+25.79 OFF 112.62'

STA 660+60.39 ℄ EXIST. I-270 =
STA 13+04.79 ℄ EXIST. BELLEFONTAINE RD

INSTALL MGS BRIDGE APPROACH TRANSITION (REGULAR/NO CURB) STA 661+79.28

INSTALL MGS BRIDGE APPROACH TRANSITION (REGULAR/NO CURB) STA 661+88.03

INSTALL APPROX. 388' MGS GUARDRAIL STA 662+25.53 TO STA 666+11.73

INSTALL MGS END ANCHOR STA 666+20.00

STA 0+00.00 ℄ EXIST. RAMP 4 =
STA 14+79.56 ℄ EXIST. BELLEFONTAINE RD

STA 17+98.89 ℄ EXIST. RAMP 2 =
STA 14+79.56 ℄ EXIST. BELLEFONTAINE RD

BRIDGE A9494

BRIDGE A9493

I-270 WB

I-270 EB

SCALE
0 50 100 150

SPECIAL SHEET
GUARDRAIL DETAILS
I-270/BELLEFONTAINE RD
STA 656+00 TO STA 669+50
SHEET 1 OF 1

STATE OF MISSOURI
EUGENE LOUIS KUEKER JR.
NUMBER PE-2011000912
PROFESSIONAL ENGINEER

THIS SHEET HAS BEEN SIGNED, SEALED, AND DATED ELECTRONICALLY.

IF A SEAL IS PRESENT ON THIS SHEET IT HAS BEEN ELECTRONICALLY SEALED AND DATED.

DATE PREPARED
3/25/2026

ROUTE	STATE
I-270	MO
DISTRICT	SHEET NO.
SL	30

COUNTY
ST. LOUIS

JOB NO.
JSL0021

CONTRACT ID.

PROJECT NO.

BRIDGE NO.

DESCRIPTION	DATE

MISSOURI HIGHWAYS AND TRANSPORTATION COMMISSION
105 WEST CAPITOL
JEFFERSON CITY, MO 65102
1-888-ASK-MODOT (1-888-275-6636)

HDR Engineering, Inc.
1001 Highlands Plaza Drive
Suite 200
St. Louis, MO 63110-1337
314-425-8300
Certificate of Authority: 000856

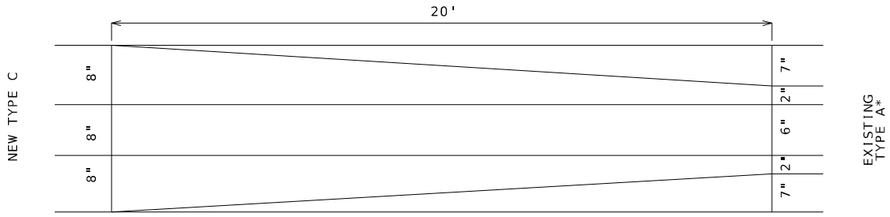

* STANDARD WIDTH SHOWN
MATCH THE EXISTING WIDTH IF DIFFERENT

PLAN VIEW

NOT TO SCALE. FOLLOW DIMENSIONS

NOTES:

BAR SPLICES SHALL BE A MINIMUM OF 24 TIMES THE NOMINAL DIAMETER OF THE BAR.

ANY METHOD DEVISED BY THE CONTRACTOR AND APPROVED BY THE ENGINEER THAT WILL ASSURE THE LONGITUDINAL REINFORCING STEEL WILL BE POSITIONED ± 1/2 INCH AS DIMENSIONED WILL BE SATISFACTORY.

THE CONTRACTOR HAS THE OPTION TO SLIP-FORM THE BARRIER. IN WHICH CASE, ADDITIONAL REINFORCEMENT MAY BE TIED TO THE UPPER TWO-THIRDS OF THE REINFORCING CAGE TO PROVIDE BRACING.

SAWED JOINTS SHALL BE LOCATED AT PAVEMENT TRANSVERSE JOINTS.

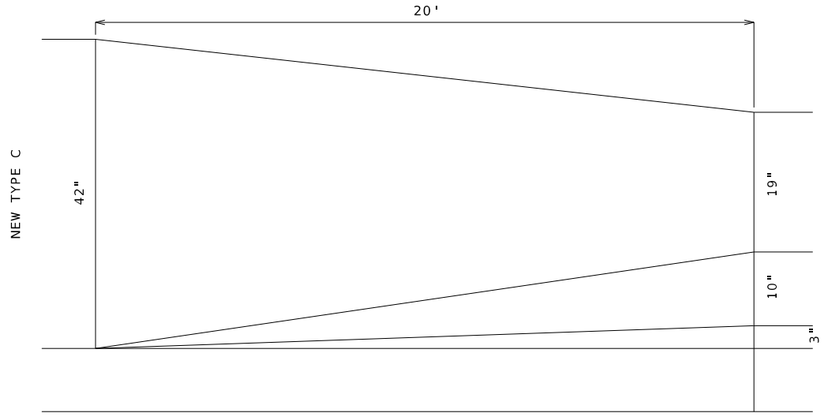

PROFILE VIEW

NOTE: NON-STANDARD BARRIER PAID AS TYPE C (MODIFIED) MEDIAN BARRIER REGARDLESS OF WIDTH OR CONSTRUCTION.

UPSTREAM END SHOWN.
DOWNSTREAM END SIMILAR.

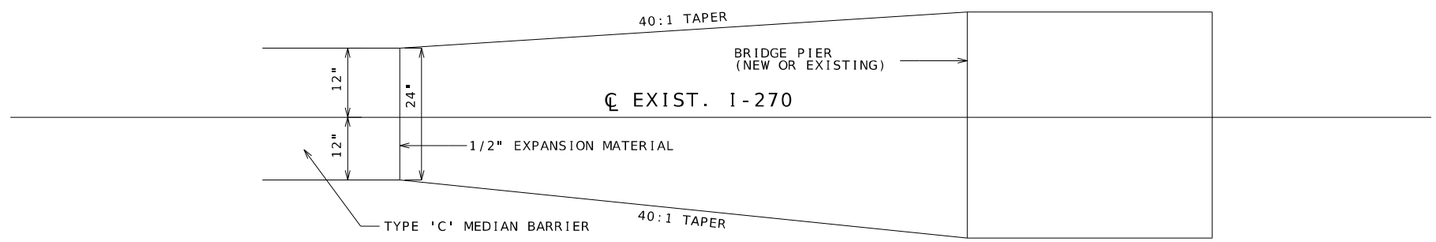

NOT TO SCALE. FOLLOW DIMENSIONS

SPECIAL SHEET
BARRIER TRANSITION
SHEET 1 OF 1

STATE OF MISSOURI
EUGENE LOUIS KUEKER JR.
NUMBER PE-2010009912
PROFESSIONAL ENGINEER

THIS SHEET HAS BEEN SIGNED, SEALED, AND DATED ELECTRONICALLY.

IF A SEAL IS PRESENT ON THIS SHEET IT HAS BEEN ELECTRONICALLY SEALED AND DATED.

DATE PREPARED: 3/25/2026
ROUTE: I-270 | STATE: MO
DISTRICT: SL | SHEET NO.: 31
COUNTY: ST. LOUIS
JOB NO.: JSL0021
CONTRACT ID.:
PROJECT NO.:
BRIDGE NO.:

DESCRIPTION	DATE

MISSOURI HIGHWAYS AND TRANSPORTATION COMMISSION
105 WEST CAPITOL
JEFFERSON CITY, MO 65102
1-888-ASK-MODOT (1-888-275-6636)

HDR Engineering, Inc.
1001 Highlands Plaza Drive
Suite 200
St. Louis, MO 63110-1337
314-425-8300
Certificate of Authority: 000856

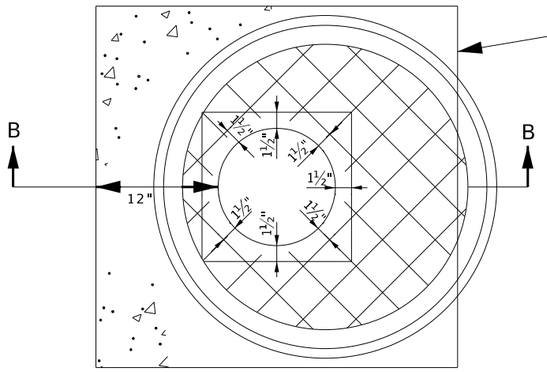

PLAN OF FLAT SLAB
MANHOLE TOP

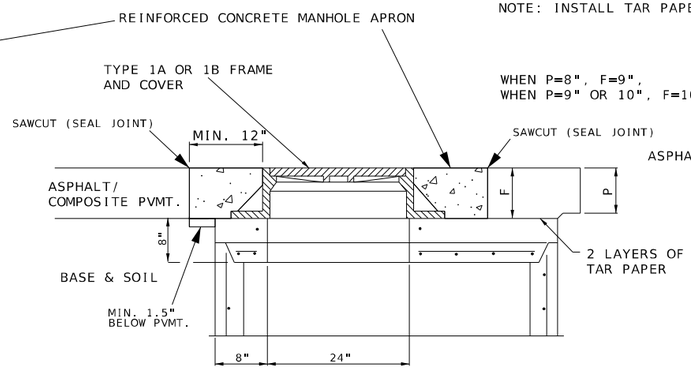

FLAT SLAB MANHOLE TOP (PAVED AREA)
SECTION B-B

NOTE: INSTALL TAR PAPER BETWEEN FRAME & COVER AND THE NEW CONCRETE MANHOLE APRON AS DIRECTED BY THE ENGINEER.

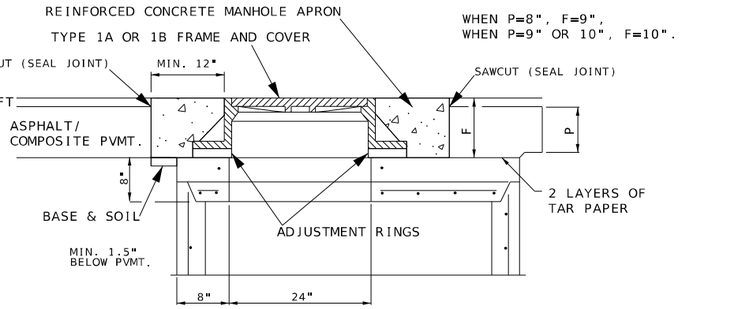

FLAT SLAB MANHOLE TOP (PAVED AREA) W/ ADJUSTMENT RINGS NEXT TO ASPHALT OVERLAY

SECTION B-B

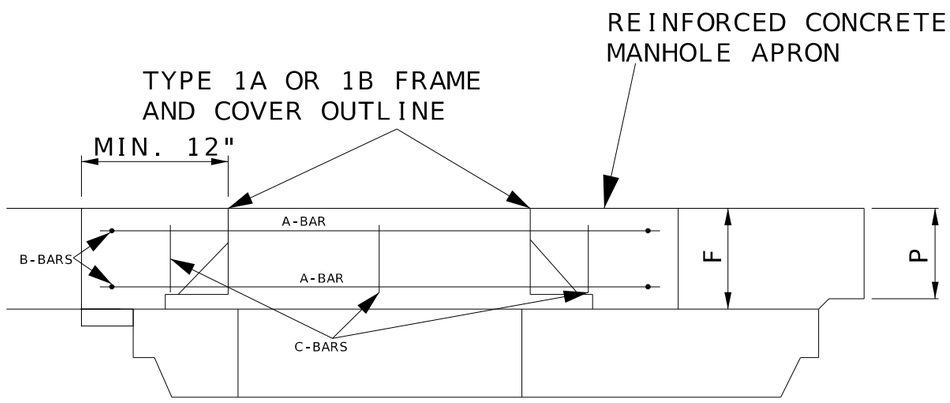

SECTION B-B
APRON REINFORCEMENT DETAIL

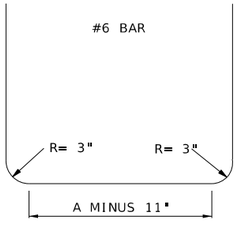

FOR MANHOLE APRON

BENDING DIAGRAM FOR B-BARS

(1) PROVIDE MIN. 4.75" CLEARANCE
BETWEEN REINFORCING & MANHOLE FRAME & COVER
OR CIRCULAR PRECAST MANHOLE.

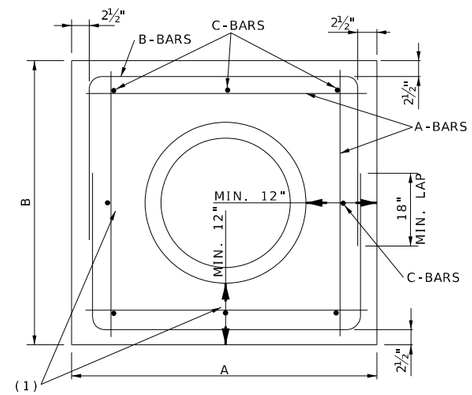

TOP VIEW OF MANHOLE APRON WITH REINFORCEMENT

NOTE: INSTALL 'C' BARS VERTICALLY INTO MANHOLE APRON CONCRETE. PROVIDE MIN. 1.5" CLEARANCE FROM TOP OF PAVEMENT & BOTTOM OF APRON. LENGTH OF 'C' BARS FOR 'F' DIMENSION SHALL BE 6". BAR LENGTH MAY VARY. 'C' BARS SHALL BE TIED TO 'A' REINFORCEMENT. 'B' BARS SHALL BE TIED TO 'A' REINFORCEMENT. 'A' BAR REINFORCEMENT SHALL HAVE 1.5" CLEARANCE TO EDGE OF APRON.

GENERAL NOTES:

1. IF MANHOLE STRUCTURE DOES NOT HAVE FRAME & COVER BUT INSTEAD THE ENTIRE STRUCTURE REACHES THE TOP OF ROADWAY, THEN THIS SHEET SHALL NOT BE USED.
2. THIS SHEET SHALL TYPICALLY BE USED WHERE THE MANHOLE FRAME & COVER NEED TO BE RAISED TO GRADE, BUT CAN BE USED FOR NEW STRUCTURES AS WELL, PARTICULARLY FOR STRUCTURES INSTALLED WITHIN ASPHALT PAVEMENT.
3. THE CONTRACTOR SHALL USE 2 LAYERS OF 'A' & 'B' BAR REINFORCEMENT AS LONG AS 'F' THICKNESS NOTED ABOVE IS GREATER THAN OR EQUAL TO 9".
4. PAYMENT FOR REINFORCED CONCRETE MANHOLE APRON SHALL BE MADE PER EACH AND SHALL INCLUDE ALL NECESSARY REINFORCEMENT AND SAW CUTS OF EXISTING OR PROPOSED PAVEMENT.
5. MIN. DIMENSIONS OF 'A' AND 'B' IS THE FOLLOWING: 12" WALL + MANHOLE (INCLUDING WALL THICKNESS) + 12".
6. CONTRACTOR SHALL PROVIDE EITHER A SQUARE OR RECTANGLE SHAPED FULL DEPTH SAWCUT AROUND THE CONCRETE MANHOLE APRON AFTER CONSTRUCTION. THE MIN. WIDTH SHALL BE 12" BUT MAY VARY. THE CONTRACTOR SHALL NOT DO A CIRCULAR SAWCUT AROUND THE REINFORCED CONCRETE MANHOLE APRON.
7. CONCRETE USED FOR MANHOLE APRON SHALL BE THE SAME AS THAT USED FOR FULL DEPTH PAVEMENT REPAIRS. PLEASE SEE SECTION 613.10 OF THE STANDARD SPECIFICATIONS FOR ADDITIONAL DETAILS. CONTRACTOR MAY BE ALLOWED TO USE HIGH EARLY STRENGTH CONCRETE, WITH APPROVAL FROM THE ENGINEER.
8. THE CONTRACTOR SHALL RAISE THE MANHOLE FRAME & COVER USING CONCRETE RINGS AND APPROVED MECHANICAL ADJUSTMENT DEVICES TO FINISH GRADE MATCHING PROFILE AND CROSS SLOPE.
9. REINFORCING BARS IN PAVEMENT SHALL BE EPOXY COATED AND SECURELY TIED TOGETHER AND FASTENED TO AVOID ANY POSSIBLE DISPLACEMENT DURING THE PLACING OF CONCRETE.
10. NO DIRECT PAYMENT WILL BE MADE FOR PROVIDING, CUTTING OR BENDING REINFORCING STEEL.
11. THE CONTRACTOR SHALL SEAL JOINTS FORMED BETWEEN THE INTERFACE OF THE NEW APRON AND THE ASPHALT PAVEMENT ALONG WITH JOINTS CREATED BY THE OVERCUT OF SAWING FOR THE REMOVAL OF PAVEMENT. SEE THE JSP FOR ADDITIONAL INFORMATION.

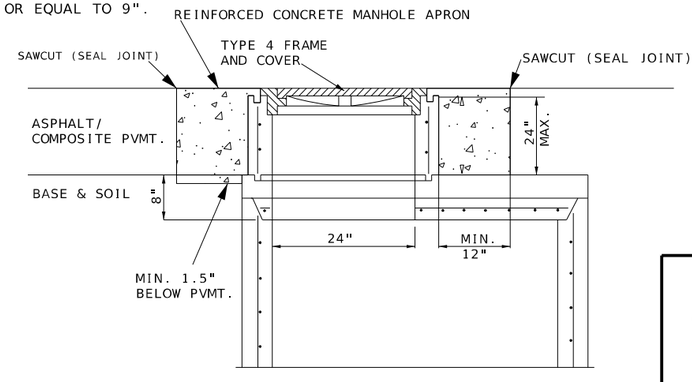

ALTERNATE MANHOLE TOP

SPECIAL SHEET
CONCRETE MANHOLE APRON
FOR ASPHALT PAVING
SHEET 1 OF 1

STATE OF MISSOURI
EUGENE LOUIS KUEKER JR.
NUMBER PE-2010020912
PROFESSIONAL ENGINEER
THIS SHEET HAS BEEN SIGNED, SEALED, AND DATED ELECTRONICALLY.

DATE PREPARED 3/25/2026
ROUTE I-270 | STATE MO
DISTRICT SL | SHEET NO. 32
COUNTY ST. LOUIS
JOB NO. JSL0021
CONTRACT ID.
PROJECT NO.
BRIDGE NO.

DESCRIPTION | DATE

IF A SEAL IS PRESENT ON THIS SHEET IT HAS BEEN ELECTRONICALLY SEALED AND DATED.

MISSOURI HIGHWAYS AND TRANSPORTATION COMMISSION
105 WEST CAPITOL
JEFFERSON CITY, MO 65102
1-888-ASK-MODOT (1-888-275-6636)

HDR Engineering, Inc.
1001 Highlands Plaza Drive
Suite 200
St. Louis, MO 63110-1337
314-425-8300
Certificate of Authority: 000856

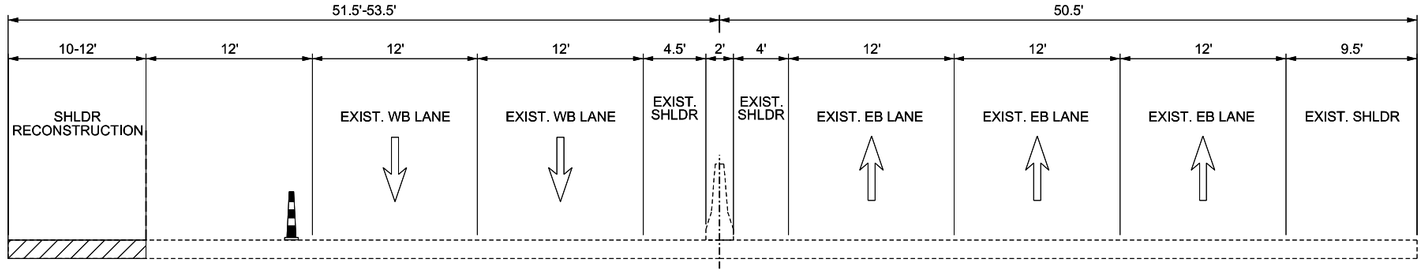

PHASE 0

LOOKING EAST

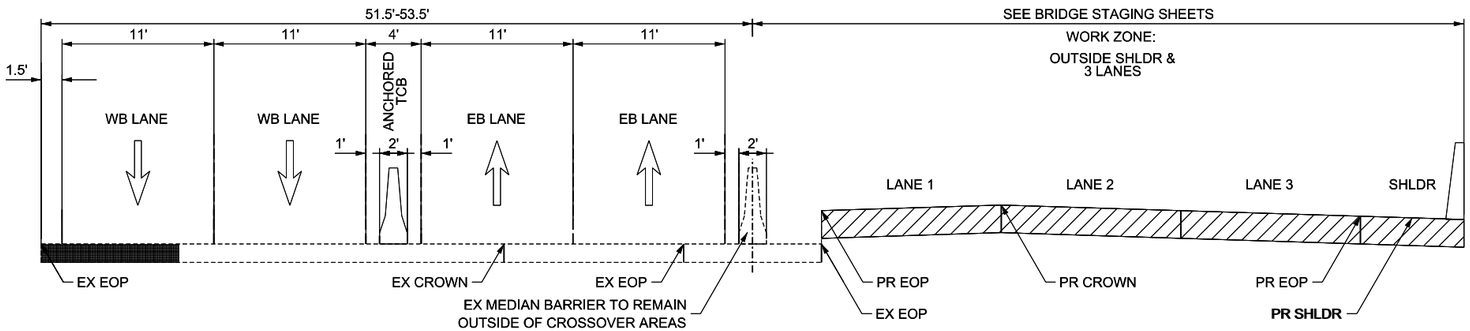

PHASE 1A

LOOKING EAST

NOTE: WHEN TRAFFIC IS PRESENT ON BOTH SIDES OF TEMPORARY BARRIER, SHOULDER WIDTHS LESS THAN 2' REQUIRE PINNING.

LEGEND

- WORK ZONE
- PREVIOUSLY CONSTRUCTED
- TEMPORARY CONCRETE BARRIER (TCB)
- DIRECTION OF TRAFFIC

TRAFFIC CONTROL PLAN
TYPICAL SECTIONS
SHEET 1 OF 3

STATE OF MISSOURI
JONATHAN R. LOOS
NUMBER PE-2007009326
PROFESSIONAL ENGINEER

DATE PREPARED
3/20/2026

ROUTE	STATE
I-270	MO
DISTRICT	SHEET NO.
STL	33

COUNTY
ST. LOUIS

JOB NO.
JSL0021

CONTRACT ID.
.

PROJECT NO.
.

BRIDGE NO.
.

DESCRIPTION	DATE
.	.
.	.
.	.
.	.
.	.
.	.
.	.
.	.

IF A SEAL IS PRESENT ON THIS SHEET IT HAS BEEN ELECTRONICALLY SEALED AND DATED.

MISSOURI HIGHWAYS AND TRANSPORTATION COMMISSION
105 WEST CAPITOL
JEFFERSON CITY, MO 65102
1-888-ASK-MODOT (1-888-275-6636)

HORNER SHIFRIN
401 S. 18TH ST., STE. 400 ST. LOUIS, MO 63103
314-430-1000 FAX 314-436-2386
WWW.HORNERSHIFRIN.COM
DISCIPLINE: PROFESSIONAL ENGINEERING
CERTIFICATE OF AUTHORITY: 000159
EXPIRATION DATE: DECEMBER 31, 2026

REV.

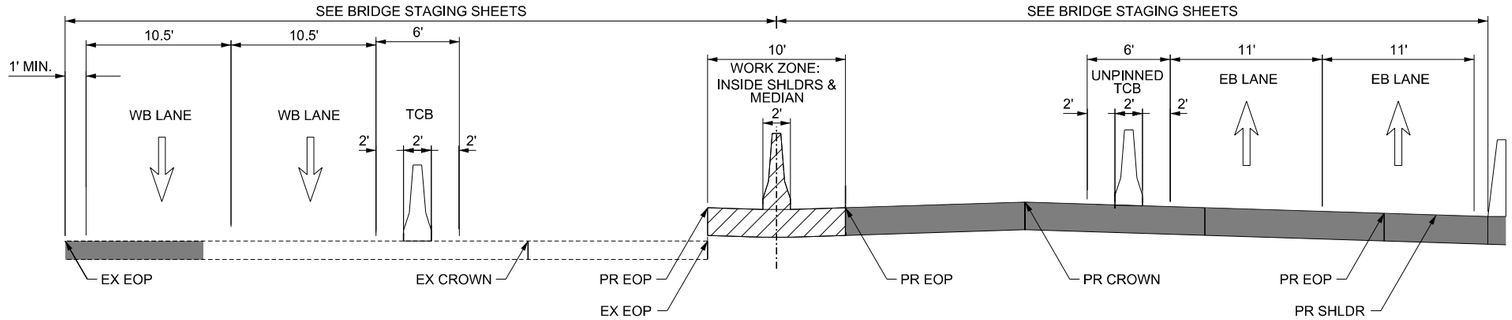

PHASE 1B

LOOKING EAST
605+70.00 TO 614+75.00
655+70.00 TO 666+20.00

NOTE: WHEN TRAFFIC IS PRESENT ON BOTH SIDES OF TEMPORARY BARRIER, SHOULDER WIDTHS LESS THAN 2' REQUIRE PINNING.
NOTE: REFER TO BRIDGE STAGING SHEETS AND TEMPORARY TRAFFIC CONTROL DETAIL SHEET FOR BARRIER AND LANE TRANSITIONS AT EB BRIDGE APPROACHES.

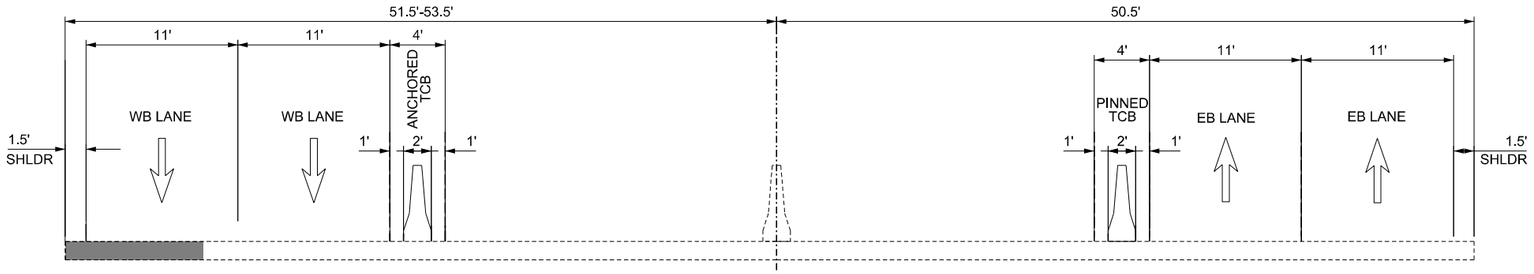

PHASE 1B

LOOKING EAST
593+96.00 TO 605+70.00
614+75.00 TO 655+70.00
666+20.00 TO 685+98.00

NOTE: WHEN TRAFFIC IS PRESENT ON BOTH SIDES OF TEMPORARY BARRIER, SHOULDER WIDTHS LESS THAN 2' REQUIRE PINNING.

LEGEND

- WORK ZONE
- PREVIOUSLY CONSTRUCTED
- TEMPORARY CONCRETE BARRIER (TCB)
- DIRECTION OF TRAFFIC

TRAFFIC CONTROL PLAN
TYPICAL SECTIONS
SHEET 2 OF 3

STATE OF MISSOURI
JONATHAN R. LODS
NUMBER PE-2017000326
PROFESSIONAL ENGINEER

DATE PREPARED
3/26/2026

ROUTE	STATE
I-270	MO
DISTRICT	SHEET NO.
STL	34

COUNTY
ST. LOUIS

JOB NO.
JSL0021

CONTRACT ID.
.

PROJECT NO.
.

BRIDGE NO.
.

DATE	DESCRIPTION
.	.

IF A SEAL IS PRESENT ON THIS SHEET IT HAS BEEN ELECTRONICALLY SEALED AND DATED.

MISSOURI HIGHWAYS AND TRANSPORTATION COMMISSION
105 WEST CAPITOL
JEFFERSON CITY, MO 65102
1-888-ASK-MODOT (1-888-275-6636)

HORNER SHIFRIN
401 S. 18TH ST., STE. 400 ST. LOUIS, MO 63103
314-241-1976 FAX 314-241-1988
WWW.HORNERSHIFRIN.COM
DISCIPLINE: PROFESSIONAL ENGINEERING
CERTIFICATE OF AUTHORITY: 000159
EXPIRATION DATE: DECEMBER 31, 2026

REV.

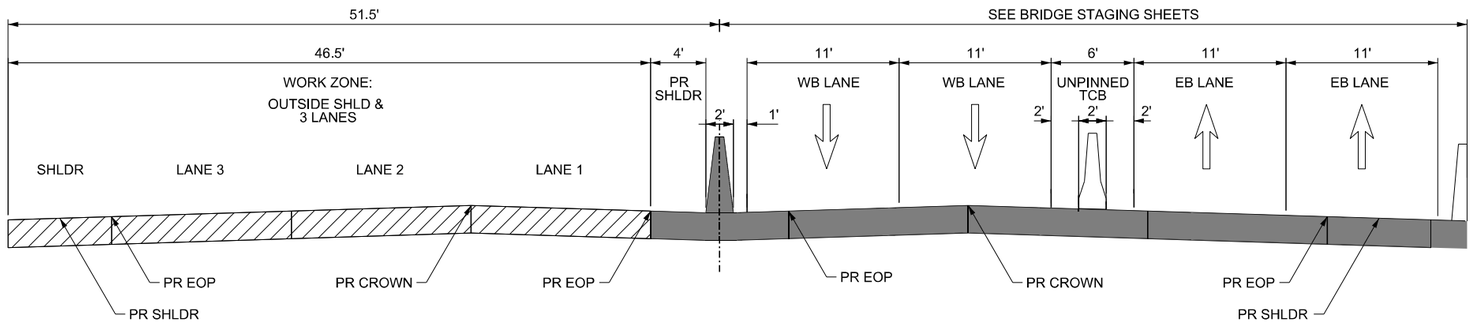

PHASE 2
LOOKING EAST
WITHIN CONSTRUCTION ZONE

NOTE: WHEN TRAFFIC IS PRESENT ON BOTH SIDES OF TEMPORARY BARRIER, SHOULDER WIDTHS LESS THAN 2' REQUIRE PINNING.
NOTE: REFER TO BRIDGE STAGING SHEETS AND TEMPORARY TRAFFIC CONTROL DETAIL SHEET FOR BARRIER AND LANE TRANSITIONS AT EB BRIDGE APPROACHES.

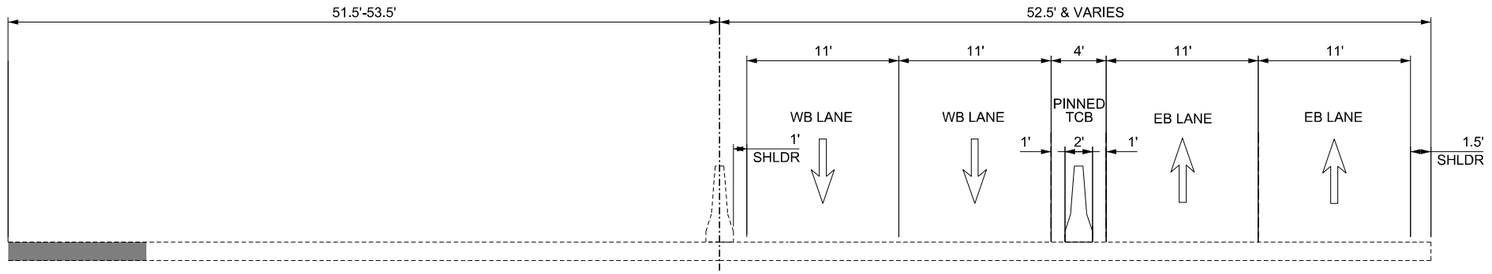

PHASE 2
LOOKING EAST
BETWEEN CONSTRUCTION ZONES

NOTE: WHEN TRAFFIC IS PRESENT ON BOTH SIDES OF TEMPORARY BARRIER, SHOULDER WIDTHS LESS THAN 2' REQUIRE PINNING.

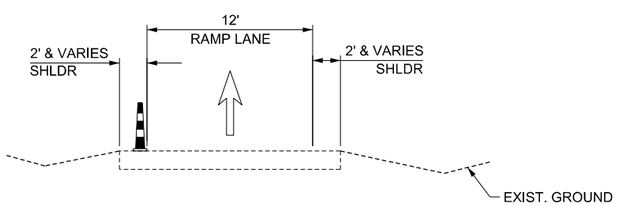

ENTRANCE RAMP TYPICAL SECTION
SEE SHEETS FOR LANE DIMENSIONS

LEGEND

- WORK ZONE
- PREVIOUSLY CONSTRUCTED
- TEMPORARY CONCRETE BARRIER (TCB)
- DIRECTION OF TRAFFIC

TRAFFIC CONTROL PLAN
TYPICAL SECTIONS
SHEET 3 OF 3

STATE OF MISSOURI
JONATHAN R. LODS
NUMBER PE-2017000326
PROFESSIONAL ENGINEER

DATE PREPARED
3/26/2026

ROUTE	STATE
I-270	MO
DISTRICT	SHEET NO.
STL	35

COUNTY
ST. LOUIS

JOB NO.
JSL0021

CONTRACT ID.
.

PROJECT NO.
.

BRIDGE NO.
.

DESCRIPTION	DATE
.	.

IF A SEAL IS PRESENT ON THIS SHEET IT HAS BEEN ELECTRONICALLY SEALED AND DATED.

MISSOURI HIGHWAYS AND TRANSPORTATION COMMISSION
105 WEST CAPITOL
JEFFERSON CITY, MO 65102
1-888-ASK-MODOT (1-888-275-6636)

HORNER SHIFRIN
401 S. 18TH ST., STE. 400 ST. LOUIS, MO 63103
314-241-1976 FAX 314-241-1988
WWW.HORNERSHIFRIN.COM
DISCIPLINE: PROFESSIONAL ENGINEERING
CERTIFICATE OF AUTHORITY: 000159
EXPIRATION DATE: DECEMBER 31, 2026

GENERAL TRAFFIC CONTROL NOTES:

1. ANY EXISTING GROUND-MOUNTED SIGN THAT CONFLICTS WITH THE TRAFFIC CONTROL SIGNING SHALL BE COMPLETELY COVERED OR REMOVED AT NO DIRECT PAY. COVERING OF EXISTING OVERHEAD SIGNS SHALL BE AS NOTED IN THE PLANS AND PAID AS EACH UNDER BID ITEM "COVER EXISTING OVERHEAD SIGN".

2. PLACEMENT OF TRAFFIC CONTROL SIGNS ARE APPROXIMATE AND MAY BE ADJUSTED TO FIT FIELD CONDITIONS AS APPROVED BY THE ENGINEER.

3. SIGN AND DEVICE LOCATIONS SHALL BE FIELD VERIFIED AND APPROVED BY THE ENGINEER.

4. NO DIRECT PAY WILL BE MADE FOR THE RELOCATION OR TEMPORARY MOUNTING OF EXISTING SIGNS DISPLACED BY THE TEMPORARY WIDENING. METHOD OF TEMPORARY MOUNTING AND LOCATION OF THESE SIGNS TO BE APPROVED BY THE ENGINEER.

DISCLAIMER

THE PROFESSIONAL WHOSE SIGNATURE AND PERSONAL SEAL APPEAR HEREON ASSUMES RESPONSIBILITY ONLY FOR WHAT APPEARS ON THIS PAGE, AND DISCLAIMS (PURSUANT TO SECTION 327.411 RSMO) SPECIFICATION, ESTIMATES, REPORTS, OR OTHER DOCUMENTS OR INSTRUMENTS NOT SEALED BY THE UNDERSIGNED PROFESSIONAL RELATING TO OR INTENDED TO BE USED FOR ANY PART OR PARTS OF THE PROJECT TO WHICH THIS PAGE REFERS.

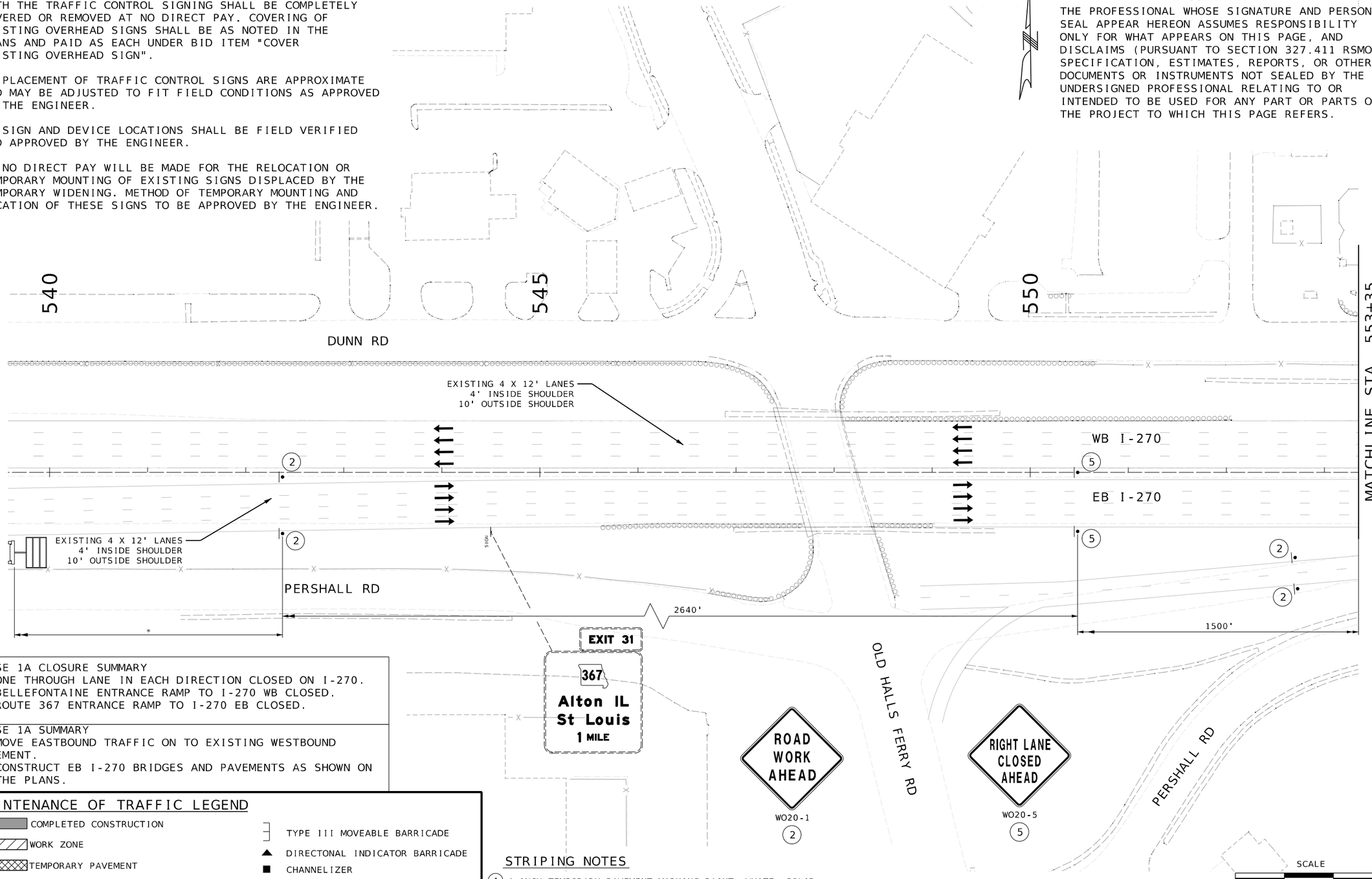

PHASE 1A CLOSURE SUMMARY

1. ONE THROUGH LANE IN EACH DIRECTION CLOSED ON I-270.
2. BELLEFONTAINE ENTRANCE RAMP TO I-270 WB CLOSED.
3. ROUTE 367 ENTRANCE RAMP TO I-270 EB CLOSED.

PHASE 1A SUMMARY

1. MOVE EASTBOUND TRAFFIC ON TO EXISTING WESTBOUND PAVEMENT.
2. CONSTRUCT EB I-270 BRIDGES AND PAVEMENTS AS SHOWN ON THE PLANS.

MAINTENANCE OF TRAFFIC LEGEND

- COMPLETED CONSTRUCTION
- WORK ZONE
- TEMPORARY PAVEMENT
- TEMPORARY PAVEMENT PLACED IN PREVIOUS STAGE
- TEMPORARY PAVEMENT TO BE REMOVED IN CURRENT STAGE
- TRAFFIC FLOW
- TEMPORARY LONG-TERM RUMBLE STRIP
- TYPE III MOVEABLE BARRICADE
- DIRECTONAL INDICATOR BARRICADE
- CHANNELIZER
- SIGN (SINGLE SIDED)
- CHANGEABLE MESSAGE SIGN *EXACT LOCATION AND MESSAGE OF CMS TO BE APPROVED BY THE ENGINEER
- FLASHING ARROW PANEL

STRIPING NOTES

1. 4-INCH TEMPORARY PAVEMENT MARKING PAINT, WHITE, SOLID
2. 4-INCH TEMPORARY PAVEMENT MARKING PAINT, WHITE, 10' DASH 30' SKIP
3. 4-INCH TEMPORARY PAVEMENT MARKING PAINT, WHITE, DOTTED
4. 4-INCH TEMPORARY PAVEMENT MARKING PAINT, YELLOW, SOLID

TRAFFIC CONTROL PLAN
PHASE 1A
SHEET 1 OF 14

STATE OF MISSOURI
JONATHAN R. LODS
NUMBER PE-2017000326
PROFESSIONAL ENGINEER

DATE PREPARED	3/20/2026
ROUTE	I-270
STATE	MO
DISTRICT	STL
SHEET NO.	36
COUNTY	ST. LOUIS
JOB NO.	JSL0021
CONTRACT ID.	.
PROJECT NO.	.
BRIDGE NO.	.

DATE	DESCRIPTION
.	.

MISSOURI HIGHWAYS AND TRANSPORTATION COMMISSION
MoDOT
105 WEST CAPITOL
JEFFERSON CITY, MO 65102
1-888-ASK-MODOT (1-888-275-6636)

HORNER SHIFRIN
401 S. 18TH ST., STE. 400 ST. LOUIS, MO 63103
314-531-4321 • FAX 314-531-6966
WWW.HORNERSHIFRIN.COM
DISCIPLINE: PROFESSIONAL ENGINEERING
CERTIFICATE OF AUTHORITY: 000159
EXPIRATION DATE: DECEMBER 31, 2026

IF A SEAL IS PRESENT ON THIS SHEET IT HAS BEEN ELECTRONICALLY SEALED AND DATED.

...\H&S\SL0021 MOT\Phase 1A Sheets 12:14:04 PM 3/20/2026

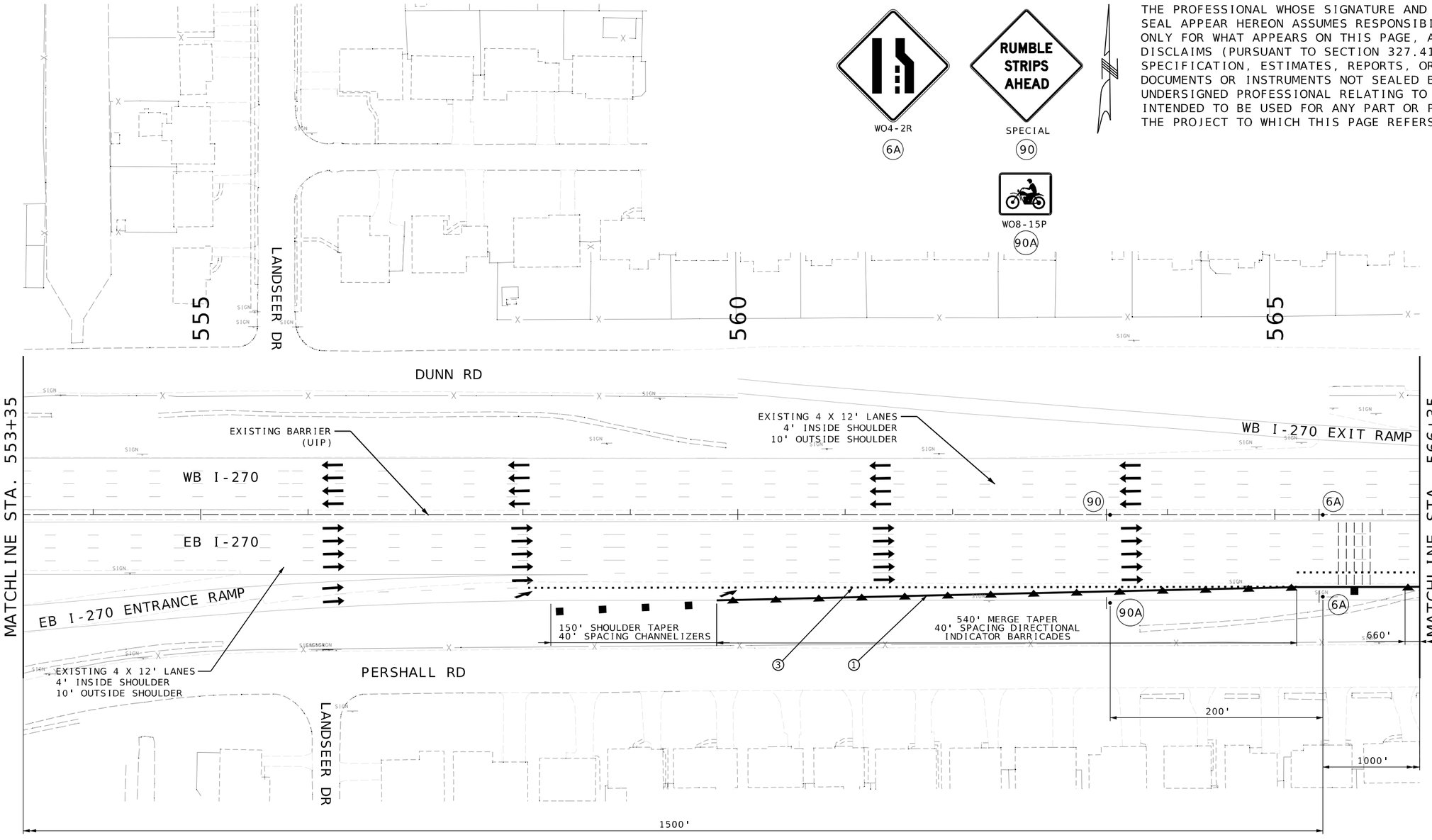

MAINTENANCE OF TRAFFIC LEGEND

- COMPLETED CONSTRUCTION
- WORK ZONE
- TEMPORARY PAVEMENT
- TEMPORARY PAVEMENT PLACED IN PREVIOUS STAGE
- TEMPORARY PAVEMENT TO BE REMOVED IN CURRENT STAGE
- TRAFFIC FLOW
- TEMPORARY LONG-TERM RUMBLE STRIP
- TYPE III MOVEABLE BARRICADE
- DIRECTONAL INDICATOR BARRICADE
- CHANNELIZER
- SIGN (SINGLE SIDED)
- CHANGEABLE MESSAGE SIGN
- FLASHING ARROW PANEL

STRIPING NOTES

1. 4-INCH TEMPORARY PAVEMENT MARKING PAINT, WHITE, SOLID
2. 4-INCH TEMPORARY PAVEMENT MARKING PAINT, WHITE, 10' DASH 30' SKIP
3. 4-INCH TEMPORARY PAVEMENT MARKING PAINT, WHITE, DOTTED
4. 4-INCH TEMPORARY PAVEMENT MARKING PAINT, YELLOW, SOLID

SCALE
0 50 100 150

TRAFFIC CONTROL PLAN PHASE 1A SHEET 2 OF 14

DISCLAIMER

THE PROFESSIONAL WHOSE SIGNATURE AND PERSONAL SEAL APPEAR HEREON ASSUMES RESPONSIBILITY ONLY FOR WHAT APPEARS ON THIS PAGE, AND DISCLAIMS (PURSUANT TO SECTION 327.411 RSMO) SPECIFICATION, ESTIMATES, REPORTS, OR OTHER DOCUMENTS OR INSTRUMENTS NOT SEALED BY THE UNDERSIGNED PROFESSIONAL RELATING TO OR INTENDED TO BE USED FOR ANY PART OR PARTS OF THE PROJECT TO WHICH THIS PAGE REFERS.

STATE OF MISSOURI
JONATHAN R. LOOS
NUMBER PE-2017000326
PROFESSIONAL ENGINEER

DATE PREPARED	5/1/2026
ROUTE	STATE
I-270	MO
DISTRICT	SHEET NO.
STL	37
COUNTY	ST. LOUIS
JOB NO.	JSL0021
CONTRACT ID.	.
PROJECT NO.	.
BRIDGE NO.	.

DESCRIPTION	DATE
.	.

IF A SEAL IS PRESENT ON THIS SHEET IT HAS BEEN ELECTRONICALLY SEALED AND DATED.

MISSOURI HIGHWAYS AND TRANSPORTATION COMMISSION
105 WEST CAPITOL
JEFFERSON CITY, MO 65102
1-888-ASK-MODOT (1-888-275-6636)

HORNER SHIFRIN
401 S. 18TH ST., STE. 400 ST. LOUIS, MO 63103
314.241.1976 FAX 314.241.1988
WWW.HORNERSHIFRIN.COM
DISCIPLINE: PROFESSIONAL ENGINEERING
CERTIFICATE OF AUTHORITY: 000159
EXPIRATION DATE: DECEMBER 31, 2026

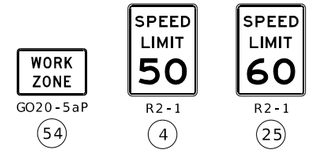

DISCLAIMER

THE PROFESSIONAL WHOSE SIGNATURE AND PERSONAL SEAL APPEAR HEREON ASSUMES RESPONSIBILITY ONLY FOR WHAT APPEARS ON THIS PAGE, AND DISCLAIMS (PURSUANT TO SECTION 327.411 RSMO) SPECIFICATION, ESTIMATES, REPORTS, OR OTHER DOCUMENTS OR INSTRUMENTS NOT SEALED BY THE UNDERSIGNED PROFESSIONAL RELATING TO OR INTENDED TO BE USED FOR ANY PART OR PARTS OF THE PROJECT TO WHICH THIS PAGE REFERS.

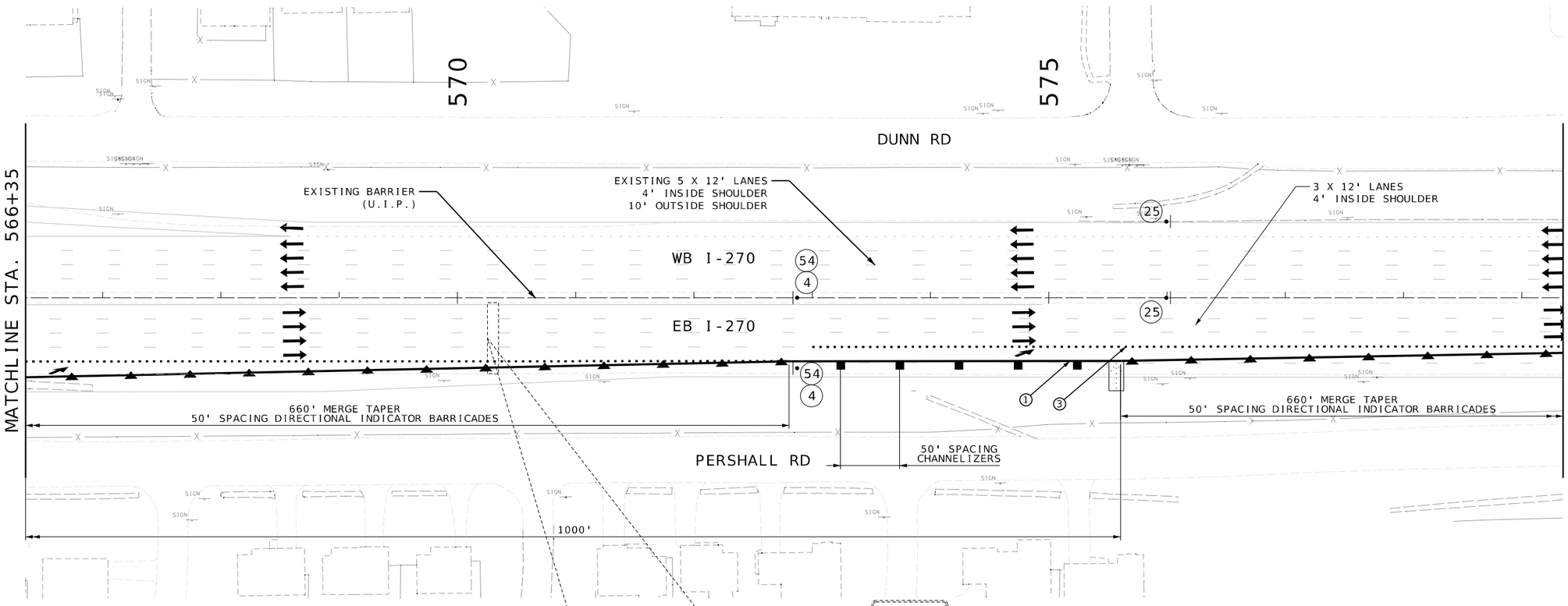

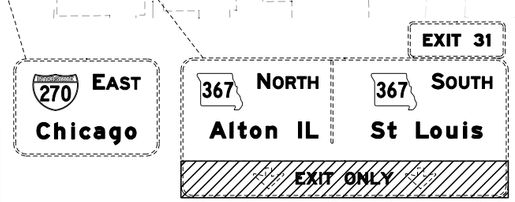

COVER 367 EXIT ONLY SIGN AND ARROWS
(SEE NOTE 1)

MAINTENANCE OF TRAFFIC LEGEND

- COMPLETED CONSTRUCTION
- WORK ZONE
- TEMPORARY PAVEMENT
- TEMPORARY PAVEMENT PLACED IN PREVIOUS STAGE
- TEMPORARY PAVEMENT TO BE REMOVED IN CURRENT STAGE
- TRAFFIC FLOW
- TEMPORARY LONG-TERM RUMBLE STRIP
- TYPE III MOVEABLE BARRICADE
- DIRECTONAL INDICATOR BARRICADE
- CHANNELIZER
- SIGN (SINGLE SIDED)
- CHANGEABLE MESSAGE SIGN
- FLASHING ARROW PANEL

STRIPING NOTES

1. 4-INCH TEMPORARY PAVEMENT MARKING PAINT, WHITE, SOLID
2. 4-INCH TEMPORARY PAVEMENT MARKING PAINT, WHITE, 10' DASH 30' SKIP
3. 4-INCH TEMPORARY PAVEMENT MARKING PAINT, WHITE, DOTTED
4. 4-INCH TEMPORARY PAVEMENT MARKING PAINT, YELLOW, SOLID

SCALE
0 50 100 150

TRAFFIC CONTROL PLAN
PHASE 1A
SHEET 3 OF 14

STATE OF MISSOURI
JONATHAN R. LOOS
NUMBER PE-2017000326
PROFESSIONAL ENGINEER

DATE PREPARED	3/20/2026
ROUTE	I-270
STATE	MO
DISTRICT	STL
SHEET NO.	38
COUNTY	ST. LOUIS
JOB NO.	JSL0021
CONTRACT ID.	.
PROJECT NO.	.
BRIDGE NO.	.

DATE	DESCRIPTION
.	.

MISSOURI HIGHWAYS AND TRANSPORTATION COMMISSION
MoDOT
105 WEST CAPITOL
JEFFERSON CITY, MO 65102
1-888-ASK-MODOT (1-888-275-6636)

HORNER SHIFRIN
401 S. 18TH ST., STE. 400 ST. LOUIS, MO 63103
314-531-4321 - FAX 314-531-6966
WWW.HORNERSHIFRIN.COM
DISCIPLINE: PROFESSIONAL ENGINEERING
CERTIFICATE OF AUTHORITY: 000159
EXPIRATION DATE: DECEMBER 31, 2026

IF A SEAL IS PRESENT ON THIS SHEET IT HAS BEEN ELECTRONICALLY SEALED AND DATED.

REV.

...\H&S\SL0021 MOT\Phase 1A Sheets 12:14:06 PM 3/20/2026

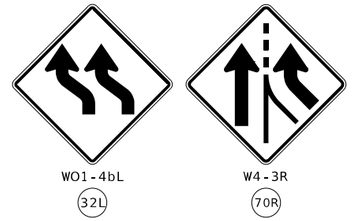

DISCLAIMER

THE PROFESSIONAL WHOSE SIGNATURE AND PERSONAL SEAL APPEAR HEREON ASSUMES RESPONSIBILITY ONLY FOR WHAT APPEARS ON THIS PAGE, AND DISCLAIMS (PURSUANT TO SECTION 327.411 RSMO) SPECIFICATION, ESTIMATES, REPORTS, OR OTHER DOCUMENTS OR INSTRUMENTS NOT SEALED BY THE UNDERSIGNED PROFESSIONAL RELATING TO OR INTENDED TO BE USED FOR ANY PART OR PARTS OF THE PROJECT TO WHICH THIS PAGE REFERS.

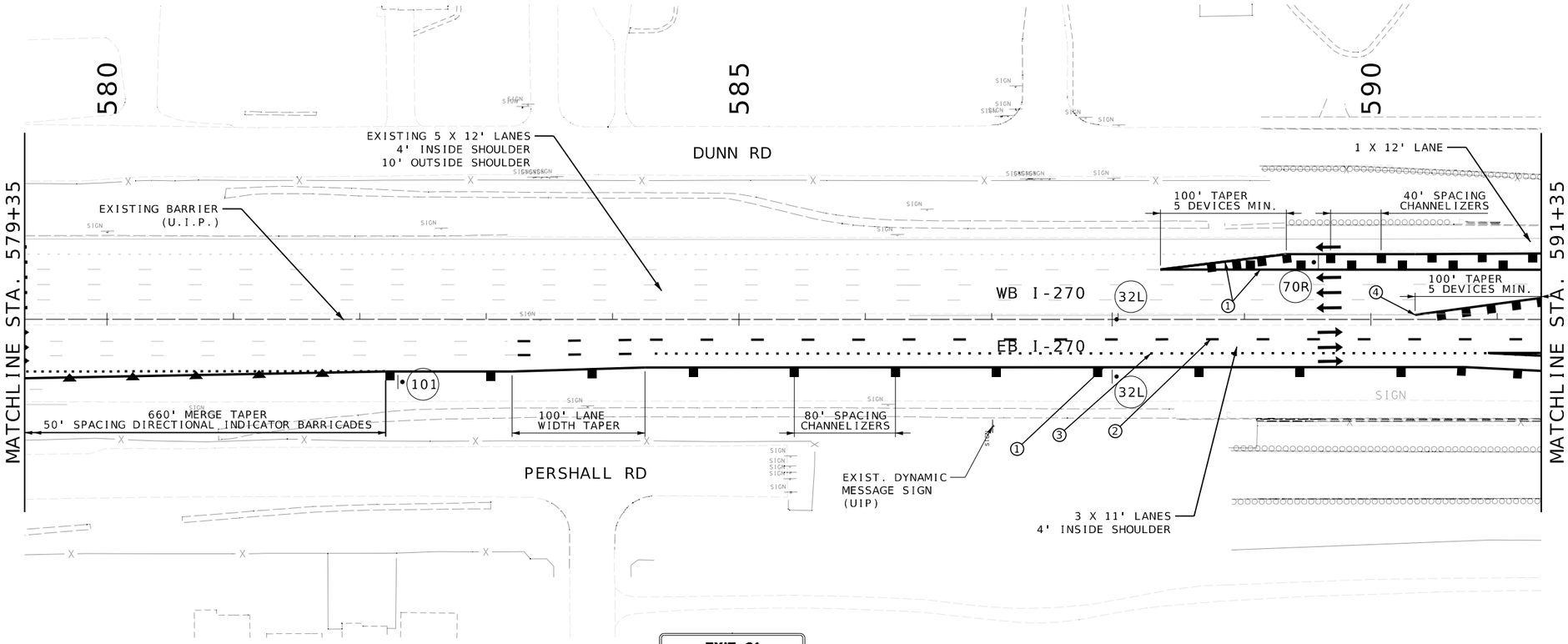



MAINTENANCE OF TRAFFIC LEGEND

- COMPLETED CONSTRUCTION
- WORK ZONE
- TEMPORARY PAVEMENT
- TEMPORARY PAVEMENT PLACED IN PREVIOUS STAGE
- TEMPORARY PAVEMENT TO BE REMOVED IN CURRENT STAGE
- TRAFFIC FLOW
- TEMPORARY LONG-TERM RUMBLE STRIP
- TYPE III MOVEABLE BARRICADE
- DIRECTONAL INDICATOR BARRICADE
- CHANNELIZER
- SIGN (SINGLE SIDED)
- CHANGEABLE MESSAGE SIGN
- FLASHING ARROW PANEL

STRIPING NOTES

1. 4-INCH TEMPORARY PAVEMENT MARKING PAINT, WHITE, SOLID
2. 4-INCH TEMPORARY PAVEMENT MARKING PAINT, WHITE, 10' DASH 30' SKIP
3. 4-INCH TEMPORARY PAVEMENT MARKING PAINT, WHITE, DOTTED
4. 4-INCH TEMPORARY PAVEMENT MARKING PAINT, YELLOW, SOLID

SCALE

0 50 100 150

TRAFFIC CONTROL PLAN
PHASE 1A
SHEET 4 OF 14

STATE OF MISSOURI
JONATHAN R. LOOS
NUMBER PE-2017000326
PROFESSIONAL ENGINEER

DATE PREPARED 3/20/2026	
ROUTE I-270	STATE MO
DISTRICT STL	SHEET NO. 39
COUNTY ST. LOUIS	
JOB NO. JSL0021	
CONTRACT ID. .	
PROJECT NO. .	
BRIDGE NO. .	

DATE	DESCRIPTION
.	.

MISSOURI HIGHWAYS AND TRANSPORTATION COMMISSION

MoDOT

105 WEST CAPITOL
JEFFERSON CITY, MO 65102
1-888-ASK-MODOT (1-888-275-6636)

HORNER SHIFRIN

401 S. 18TH ST., STE. 400 ST. LOUIS, MO 63103
314-531-4321 - FAX 314-531-6966
WWW.HORNERSHIFRIN.COM
DISCIPLINE: PROFESSIONAL ENGINEERING
CERTIFICATE OF AUTHORITY: 000159
EXPIRATION DATE: DECEMBER 31, 2026

IF A SEAL IS PRESENT ON THIS SHEET IT HAS BEEN ELECTRONICALLY SEALED AND DATED.

REV.

...\H&S\SL0021 MOT\Phase 1A Sheets 12:14:06 PM 3/20/2026

DISCLAIMER

THE PROFESSIONAL WHOSE SIGNATURE AND PERSONAL SEAL APPEAR HEREON ASSUMES RESPONSIBILITY ONLY FOR WHAT APPEARS ON THIS PAGE, AND DISCLAIMS (PURSUANT TO SECTION 327.411 RSMO) SPECIFICATION, ESTIMATES, REPORTS, OR OTHER DOCUMENTS OR INSTRUMENTS NOT SEALED BY THE UNDERSIGNED PROFESSIONAL RELATING TO OR INTENDED TO BE USED FOR ANY PART OR PARTS OF THE PROJECT TO WHICH THIS PAGE REFERS.

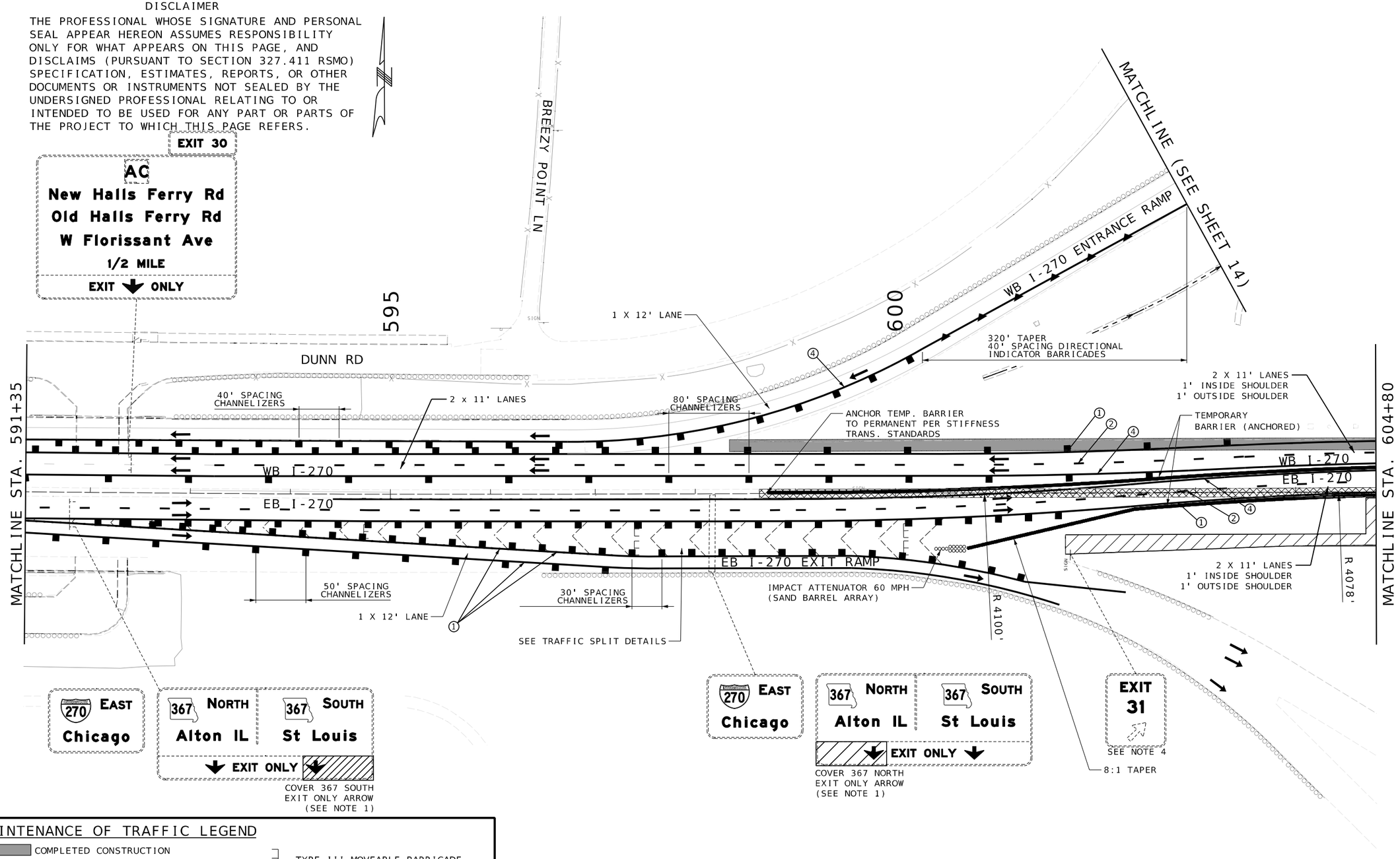

MAINTENANCE OF TRAFFIC LEGEND

- COMPLETED CONSTRUCTION
- WORK ZONE
- TEMPORARY PAVEMENT
- TEMPORARY PAVEMENT PLACED IN PREVIOUS STAGE
- TEMPORARY PAVEMENT TO BE REMOVED IN CURRENT STAGE
- TRAFFIC FLOW
- TEMPORARY LONG-TERM RUMBLE STRIP
- TYPE III MOVEABLE BARRICADE
- DIRECTONAL INDICATOR BARRICADE
- CHANNELIZER
- SIGN (SINGLE SIDED)
- CHANGEABLE MESSAGE SIGN
- FLASHING ARROW PANEL

STRIPING NOTES

1. 4-INCH TEMPORARY PAVEMENT MARKING PAINT, WHITE, SOLID
2. 4-INCH TEMPORARY PAVEMENT MARKING PAINT, WHITE, 10' DASH 30' SKIP
3. 4-INCH TEMPORARY PAVEMENT MARKING PAINT, WHITE, DOTTED
4. 4-INCH TEMPORARY PAVEMENT MARKING PAINT, YELLOW, SOLID

SCALE
0 50 100 150

TRAFFIC CONTROL PLAN
PHASE 1A
SHEET 5 OF 14

STATE OF MISSOURI
JONATHAN R. LODS
NUMBER PE-2017000326
PROFESSIONAL ENGINEER

DATE PREPARED 3/20/2026
ROUTE I-270 | STATE MO
DISTRICT STL | SHEET NO. 40
COUNTY ST. LOUIS
JOB NO. JSL0021
CONTRACT ID. .
PROJECT NO. .
BRIDGE NO. .

DESCRIPTION	DATE

IF A SEAL IS PRESENT ON THIS SHEET IT HAS BEEN ELECTRONICALLY SEALED AND DATED.

MISSOURI HIGHWAYS AND TRANSPORTATION COMMISSION
105 WEST CAPITOL
JEFFERSON CITY, MO 65102
1-888-ASK-MODOT (1-888-275-6636)

HORNER SHIFRIN
401 S. 18TH ST., STE. 400 ST. LOUIS, MO 63103
314-641-7676 FAX 314-641-7686
WWW.HORNERSHIFRIN.COM
DISCIPLINE: PROFESSIONAL ENGINEERING
CERTIFICATE OF AUTHORITY: 000159
EXPIRATION DATE: DECEMBER 31, 2026

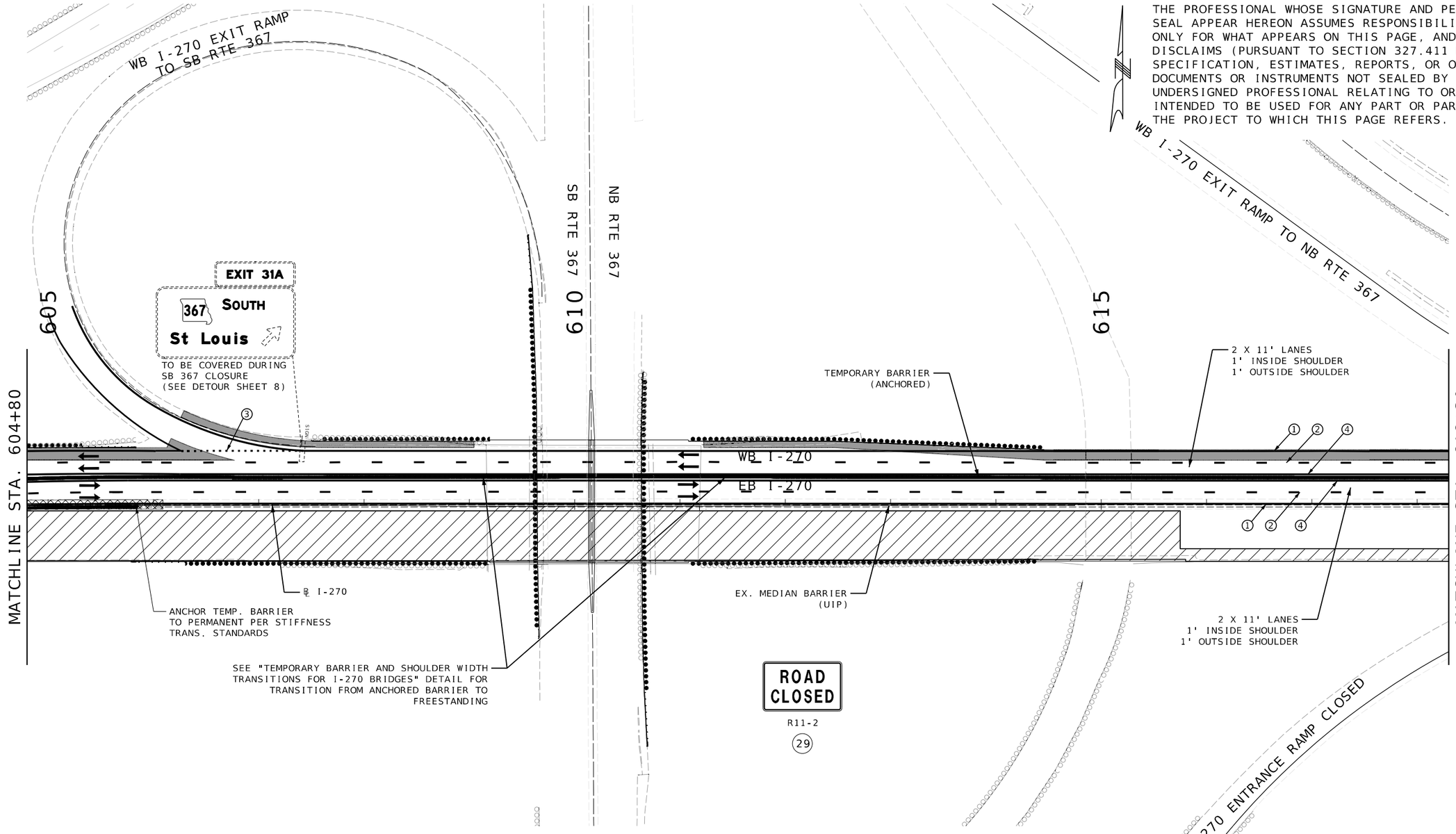

DISCLAIMER

THE PROFESSIONAL WHOSE SIGNATURE AND PERSONAL SEAL APPEAR HEREON ASSUMES RESPONSIBILITY ONLY FOR WHAT APPEARS ON THIS PAGE, AND DISCLAIMS (PURSUANT TO SECTION 327.411 RSMO) SPECIFICATION, ESTIMATES, REPORTS, OR OTHER DOCUMENTS OR INSTRUMENTS NOT SEALED BY THE UNDERSIGNED PROFESSIONAL RELATING TO OR INTENDED TO BE USED FOR ANY PART OR PARTS OF THE PROJECT TO WHICH THIS PAGE REFERS.

MAINTENANCE OF TRAFFIC LEGEND

- COMPLETED CONSTRUCTION
- WORK ZONE
- TEMPORARY PAVEMENT
- TEMPORARY PAVEMENT PLACED IN PREVIOUS STAGE
- TEMPORARY PAVEMENT TO BE REMOVED IN CURRENT STAGE
- TRAFFIC FLOW
- TEMPORARY LONG-TERM RUMBLE STRIP
- TYPE III MOVEABLE BARRICADE
- DIRECTONAL INDICATOR BARRICADE
- CHANNELIZER
- SIGN (SINGLE SIDED)
- CHANGEABLE MESSAGE SIGN
- FLASHING ARROW PANEL

STRIPING NOTES

1. 4-INCH TEMPORARY PAVEMENT MARKING PAINT, WHITE, SOLID
2. 4-INCH TEMPORARY PAVEMENT MARKING PAINT, WHITE, 10' DASH 30' SKIP
3. 4-INCH TEMPORARY PAVEMENT MARKING PAINT, WHITE, DOTTED
4. 4-INCH TEMPORARY PAVEMENT MARKING PAINT, YELLOW, SOLID

TRAFFIC CONTROL PLAN
PHASE 1A
SHEET 6 OF 14

STATE OF MISSOURI ★ PROFESSIONAL ENGINEER ★ JONATHAN R. LOOS NUMBER PE-2017000326

DATE PREPARED	
3/20/2026	
ROUTE I-270	STATE MO
DISTRICT STL	SHEET NO. 41
COUNTY ST. LOUIS	
JOB NO. JSL0021	
CONTRACT ID.	
PROJECT NO.	
BRIDGE NO.	

DESCRIPTION | DATE

MISSOURI HIGHWAYS AND TRANSPORTATION COMMISSION
MoDOT
105 WEST CAPITOL
JEFFERSON CITY, MO 65102
1-888-ASK-MODOT (1-888-275-6636)

HORNER SHIFRIN
401 S. 18TH ST., STE. 400 ST. LOUIS, MO 63103
314-531-4321 • FAX 314-531-6966
WWW.HORNERSHIFRIN.COM
DISCIPLINE: PROFESSIONAL ENGINEERING
CERTIFICATE OF AUTHORITY: 000159
EXPIRATION DATE: DECEMBER 31, 2026

IF A SEAL IS PRESENT ON THIS SHEET IT HAS BEEN ELECTRONICALLY SEALED AND DATED.

...\H&S\SL0021 MOT\Phase 1A Sheets 12:14:09 PM 3/20/2026

DISCLAIMER

THE PROFESSIONAL WHOSE SIGNATURE AND PERSONAL SEAL APPEAR HEREON ASSUMES RESPONSIBILITY ONLY FOR WHAT APPEARS ON THIS PAGE, AND DISCLAIMS (PURSUANT TO SECTION 327.411 RSMO) SPECIFICATION, ESTIMATES, REPORTS, OR OTHER DOCUMENTS OR INSTRUMENTS NOT SEALED BY THE UNDERSIGNED PROFESSIONAL RELATING TO OR INTENDED TO BE USED FOR ANY PART OR PARTS OF THE PROJECT TO WHICH THIS PAGE REFERS.

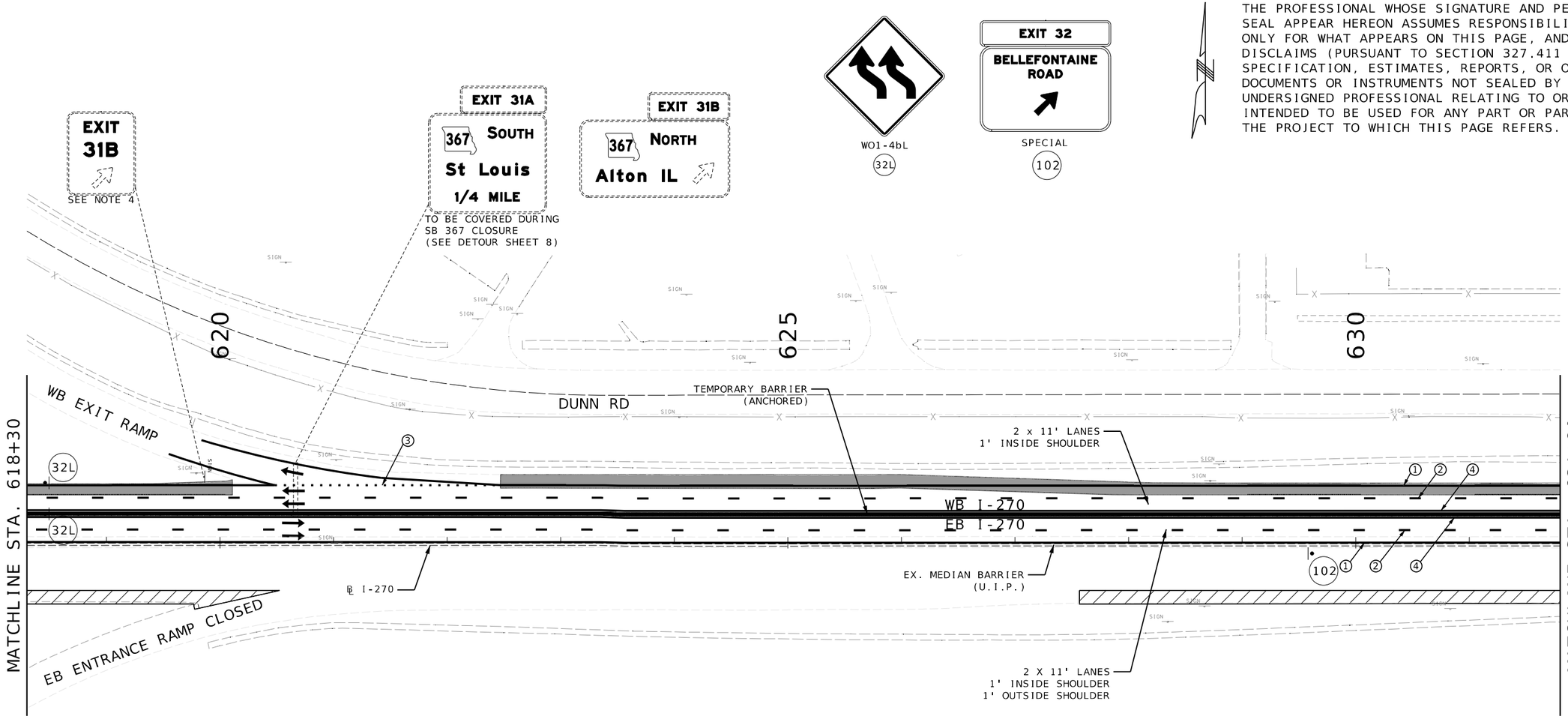

MAINTENANCE OF TRAFFIC LEGEND

- COMPLETED CONSTRUCTION
- WORK ZONE
- TEMPORARY PAVEMENT
- TEMPORARY PAVEMENT PLACED IN PREVIOUS STAGE
- TEMPORARY PAVEMENT TO BE REMOVED IN CURRENT STAGE
- TRAFFIC FLOW
- TEMPORARY LONG-TERM RUMBLE STRIP
- TYPE III MOVEABLE BARRICADE
- DIRECTONAL INDICATOR BARRICADE
- CHANNELIZER
- SIGN (SINGLE SIDED)
- CHANGEABLE MESSAGE SIGN
- FLASHING ARROW PANEL

STRIPING NOTES

1. 4-INCH TEMPORARY PAVEMENT MARKING PAINT, WHITE, SOLID
2. 4-INCH TEMPORARY PAVEMENT MARKING PAINT, WHITE, 10' DASH 30' SKIP
3. 4-INCH TEMPORARY PAVEMENT MARKING PAINT, WHITE, DOTTED
4. 4-INCH TEMPORARY PAVEMENT MARKING PAINT, YELLOW, SOLID

SCALE
0 50 100 150

TRAFFIC CONTROL PLAN
PHASE 1A
SHEET 7 OF 14

STATE OF MISSOURI
JONATHAN R. LOOS
NUMBER PE-2017000326
PROFESSIONAL ENGINEER

DATE PREPARED 3/20/2026

ROUTE	STATE
I-270	MO
DISTRICT	SHEET NO.
STL	42

COUNTY: ST. LOUIS
JOB NO.: JSL0021
CONTRACT ID.:
PROJECT NO.:
BRIDGE NO.:

IF A SEAL IS PRESENT ON THIS SHEET IT HAS BEEN ELECTRONICALLY SEALED AND DATED.

DESCRIPTION	DATE

MISSOURI HIGHWAYS AND TRANSPORTATION COMMISSION
105 WEST CAPITOL
JEFFERSON CITY, MO 65102
1-888-ASK-MODOT (1-888-275-6636)

HORNER SHIFRIN
401 S. 18TH ST., STE. 400 ST. LOUIS, MO 63103
314-241-1976 FAX 314-241-1988
WWW.HORNERSHIFRIN.COM
DISCIPLINE: PROFESSIONAL ENGINEERING
CERTIFICATE OF AUTHORITY: 000159
EXPIRATION DATE: DECEMBER 31, 2026

DISCLAIMER

THE PROFESSIONAL WHOSE SIGNATURE AND PERSONAL SEAL APPEAR HEREON ASSUMES RESPONSIBILITY ONLY FOR WHAT APPEARS ON THIS PAGE, AND DISCLAIMS (PURSUANT TO SECTION 327.411 RSMO) SPECIFICATION, ESTIMATES, REPORTS, OR OTHER DOCUMENTS OR INSTRUMENTS NOT SEALED BY THE UNDERSIGNED PROFESSIONAL RELATING TO OR INTENDED TO BE USED FOR ANY PART OR PARTS OF THE PROJECT TO WHICH THIS PAGE REFERS.

COVER BEELEFONTAINE ROAD 1/2
(SEE NOTE 1)

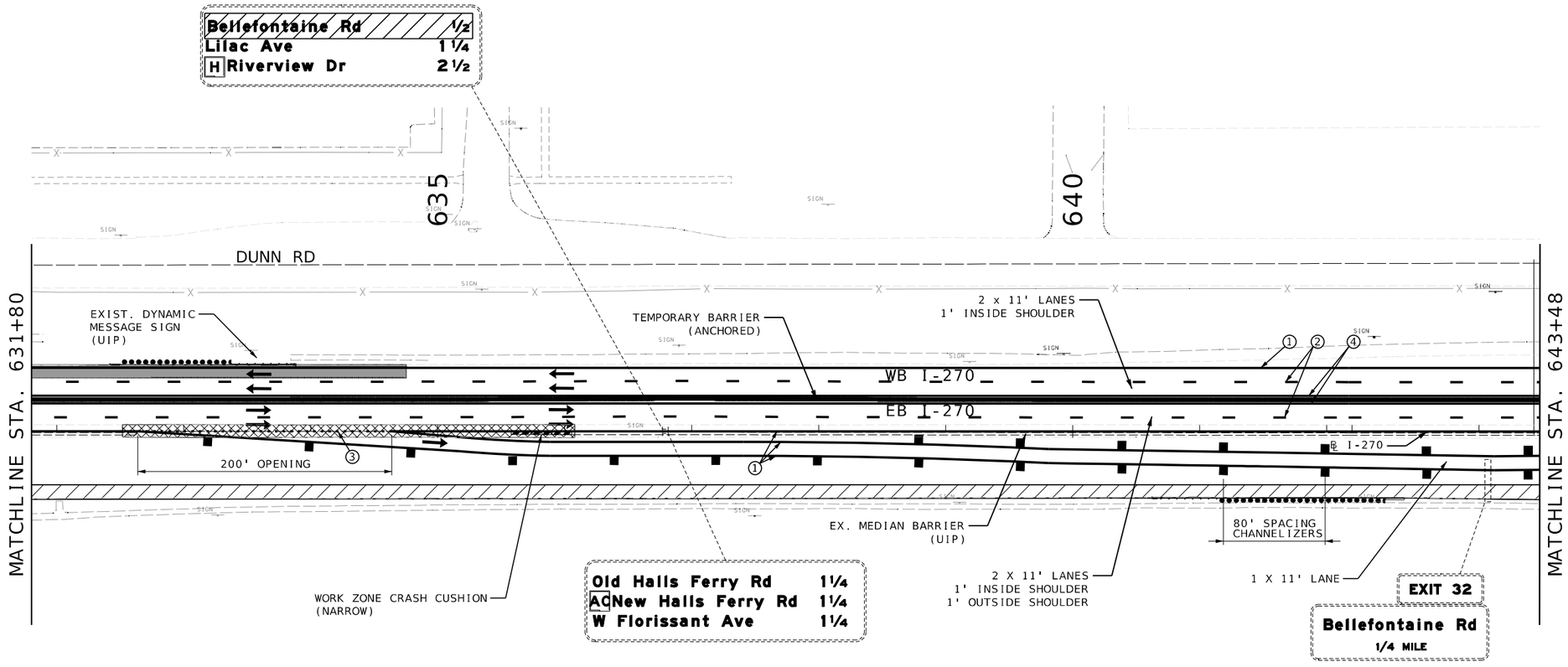

MAINTENANCE OF TRAFFIC LEGEND

- COMPLETED CONSTRUCTION
- WORK ZONE
- TEMPORARY PAVEMENT
- TEMPORARY PAVEMENT PLACED IN PREVIOUS STAGE
- TEMPORARY PAVEMENT TO BE REMOVED IN CURRENT STAGE
- TRAFFIC FLOW
- TEMPORARY LONG-TERM RUMBLE STRIP
- TYPE III MOVEABLE BARRICADE
- DIRECTONAL INDICATOR BARRICADE
- CHANNELIZER
- SIGN (SINGLE SIDED)
- CHANGEABLE MESSAGE SIGN
- FLASHING ARROW PANEL

STRIPING NOTES

1. 4-INCH TEMPORARY PAVEMENT MARKING PAINT, WHITE, SOLID
2. 4-INCH TEMPORARY PAVEMENT MARKING PAINT, WHITE, 10' DASH 30' SKIP
3. 4-INCH TEMPORARY PAVEMENT MARKING PAINT, WHITE, DOTTED
4. 4-INCH TEMPORARY PAVEMENT MARKING PAINT, YELLOW, SOLID

SCALE
0 50 100 150

TRAFFIC CONTROL PLAN
PHASE 1A
SHEET 8 OF 14

STATE OF MISSOURI
JONATHAN R. LODS
NUMBER PE-2017000326
PROFESSIONAL ENGINEER

DATE PREPARED 3/26/2026
ROUTE I-270 | STATE MO
DISTRICT STL | SHEET NO. 43
COUNTY ST. LOUIS
JOB NO. JSL0021
CONTRACT ID. .
PROJECT NO. .
BRIDGE NO. .

DESCRIPTION | DATE

IF A SEAL IS PRESENT ON THIS SHEET IT HAS BEEN ELECTRONICALLY SEALED AND DATED.

MISSOURI HIGHWAYS AND TRANSPORTATION COMMISSION
105 WEST CAPITOL
JEFFERSON CITY, MO 65102
1-888-ASK-MODOT (1-888-275-6636)

HORNER SHIFRIN
401 S. 18TH ST., STE. 400 ST. LOUIS, MO 63103
314-241-1976 FAX 314-241-1988
WWW.HORNERSHIFRIN.COM
DISCIPLINE: PROFESSIONAL ENGINEERING
CERTIFICATE OF AUTHORITY: 000159
EXPIRATION DATE: DECEMBER 31, 2026

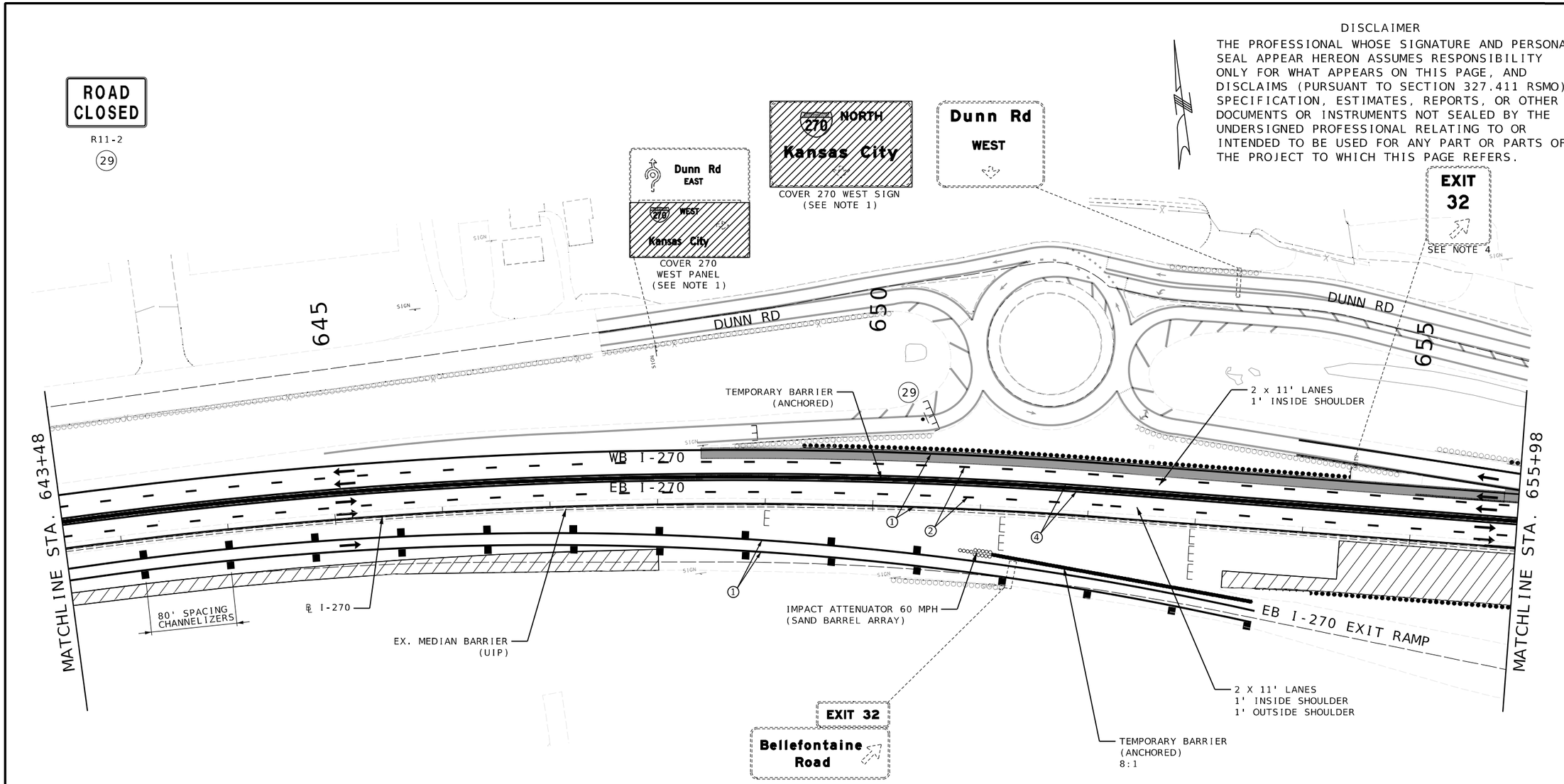

DISCLAIMER

THE PROFESSIONAL WHOSE SIGNATURE AND PERSONAL SEAL APPEAR HEREON ASSUMES RESPONSIBILITY ONLY FOR WHAT APPEARS ON THIS PAGE, AND DISCLAIMS (PURSUANT TO SECTION 327.411 RSMO) SPECIFICATION, ESTIMATES, REPORTS, OR OTHER DOCUMENTS OR INSTRUMENTS NOT SEALED BY THE UNDERSIGNED PROFESSIONAL RELATING TO OR INTENDED TO BE USED FOR ANY PART OR PARTS OF THE PROJECT TO WHICH THIS PAGE REFERS.

MAINTENANCE OF TRAFFIC LEGEND

- COMPLETED CONSTRUCTION
- WORK ZONE
- TEMPORARY PAVEMENT
- TEMPORARY PAVEMENT PLACED IN PREVIOUS STAGE
- TEMPORARY PAVEMENT TO BE REMOVED IN CURRENT STAGE
- TRAFFIC FLOW
- TEMPORARY LONG-TERM RUMBLE STRIP
- TYPE III MOVEABLE BARRICADE
- DIRECTONAL INDICATOR BARRICADE
- CHANNELIZER
- SIGN (SINGLE SIDED)
- CHANGEABLE MESSAGE SIGN
- FLASHING ARROW PANEL

STRIPING NOTES

1. 4-INCH TEMPORARY PAVEMENT MARKING PAINT, WHITE, SOLID
2. 4-INCH TEMPORARY PAVEMENT MARKING PAINT, WHITE, 10' DASH 30' SKIP
3. 4-INCH TEMPORARY PAVEMENT MARKING PAINT, WHITE, DOTTED
4. 4-INCH TEMPORARY PAVEMENT MARKING PAINT, YELLOW, SOLID

SCALE
0 50 100 150

TRAFFIC CONTROL PLAN
PHASE 1A
SHEET 9 OF 14

STATE OF MISSOURI
JONATHAN R. LODS
NUMBER
PE-2017000326
PROFESSIONAL ENGINEER

DATE PREPARED	3/20/2026
ROUTE	I-270
STATE	MO
DISTRICT	STL
SHEET NO.	44
COUNTY	ST. LOUIS
JOB NO.	JSL0021
CONTRACT ID.	.
PROJECT NO.	.
BRIDGE NO.	.

DESCRIPTION

DATE

MISSOURI HIGHWAYS AND TRANSPORTATION COMMISSION

MoDOT

105 WEST CAPITOL
JEFFERSON CITY, MO 65102
1-888-ASK-MODOT (1-888-275-6636)

HORNER SHIFRIN

401 S. 18TH ST., STE. 400 ST. LOUIS, MO 63103
314-531-4321 - FAX 314-531-6966
WWW.HORNERSHIFRIN.COM
DISCIPLINE: PROFESSIONAL ENGINEERING
CERTIFICATE OF AUTHORITY: 000159
EXPIRATION DATE: DECEMBER 31, 2026

IF A SEAL IS PRESENT ON THIS SHEET IT HAS BEEN ELECTRONICALLY SEALED AND DATED.

...\H&S\SL0021 MOT\Phase 1A Sheets 12:14:16 PM 3/20/2026

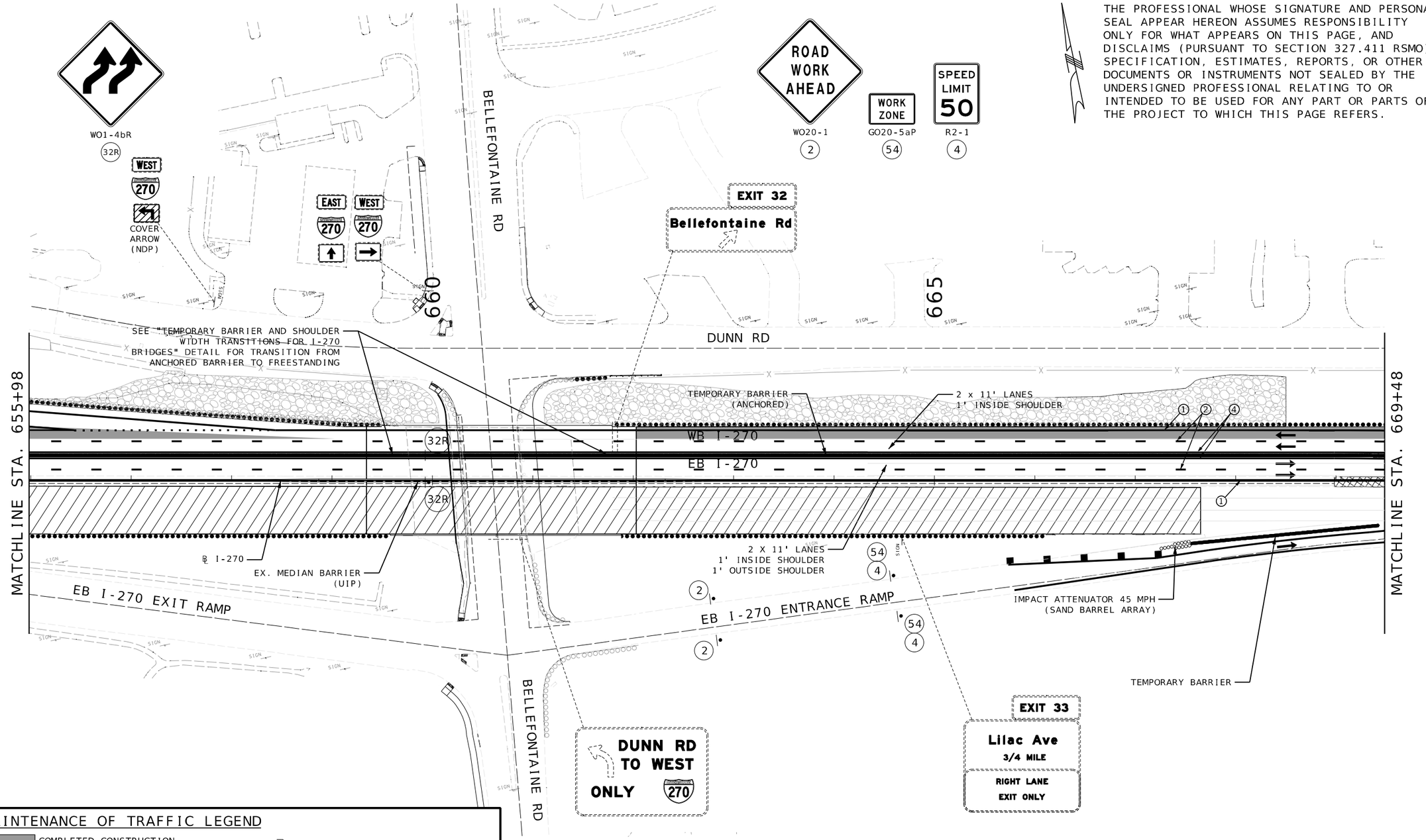

MAINTENANCE OF TRAFFIC LEGEND

- COMPLETED CONSTRUCTION
- WORK ZONE
- TEMPORARY PAVEMENT
- TEMPORARY PAVEMENT PLACED IN PREVIOUS STAGE
- TEMPORARY PAVEMENT TO BE REMOVED IN CURRENT STAGE
- TRAFFIC FLOW
- TEMPORARY LONG-TERM RUMBLE STRIP
- TYPE III MOVEABLE BARRICADE
- DIRECTONAL INDICATOR BARRICADE
- CHANNELIZER
- SIGN (SINGLE SIDED)
- CHANGEABLE MESSAGE SIGN
- FLASHING ARROW PANEL

STRIPING NOTES

1. 4-INCH TEMPORARY PAVEMENT MARKING PAINT, WHITE, SOLID
2. 4-INCH TEMPORARY PAVEMENT MARKING PAINT, WHITE, 10' DASH 30' SKIP
3. 4-INCH TEMPORARY PAVEMENT MARKING PAINT, WHITE, DOTTED
4. 4-INCH TEMPORARY PAVEMENT MARKING PAINT, YELLOW, SOLID

SCALE
0 50 100 150

TRAFFIC CONTROL PLAN
PHASE 1A
SHEET 10 OF 14

DISCLAIMER

THE PROFESSIONAL WHOSE SIGNATURE AND PERSONAL SEAL APPEAR HEREON ASSUMES RESPONSIBILITY ONLY FOR WHAT APPEARS ON THIS PAGE, AND DISCLAIMS (PURSUANT TO SECTION 327.411 RSMO) SPECIFICATION, ESTIMATES, REPORTS, OR OTHER DOCUMENTS OR INSTRUMENTS NOT SEALED BY THE UNDERSIGNED PROFESSIONAL RELATING TO OR INTENDED TO BE USED FOR ANY PART OR PARTS OF THE PROJECT TO WHICH THIS PAGE REFERS.

STATE OF MISSOURI
JONATHAN R. LOOS
NUMBER PE-2017000326
PROFESSIONAL ENGINEER

IF A SEAL IS PRESENT ON THIS SHEET IT HAS BEEN ELECTRONICALLY SEALED AND DATED.

DATE PREPARED	3/20/2026
ROUTE	I-270
STATE	MO
DISTRICT	STL
SHEET NO.	45
COUNTY	ST. LOUIS
JOB NO.	JSL0021
CONTRACT ID.	.
PROJECT NO.	.
BRIDGE NO.	.

DESCRIPTION | DATE

MISSOURI HIGHWAYS AND TRANSPORTATION COMMISSION
105 WEST CAPITOL
JEFFERSON CITY, MO 65102
1-888-ASK-MODOT (1-888-275-6636)

HORNER SHIFRIN
401 S. 18TH ST., STE. 400 ST. LOUIS, MO 63103
314-241-4744 FAX 314-241-4666
WWW.HORNERSHIFRIN.COM
DISCIPLINE: PROFESSIONAL ENGINEERING
CERTIFICATE OF AUTHORITY: 000159
EXPIRATION DATE: DECEMBER 31, 2026

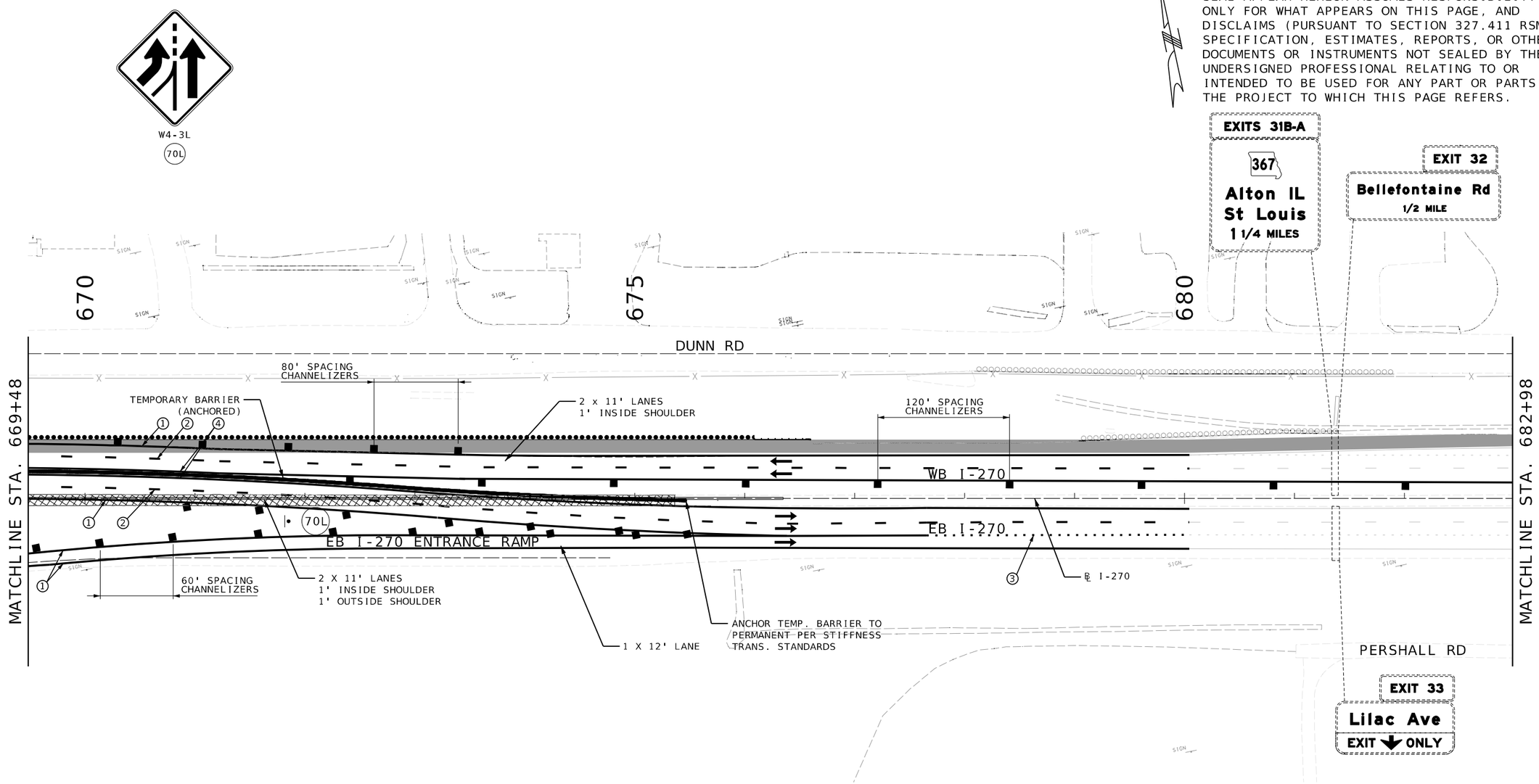

DISCLAIMER

THE PROFESSIONAL WHOSE SIGNATURE AND PERSONAL SEAL APPEAR HEREON ASSUMES RESPONSIBILITY ONLY FOR WHAT APPEARS ON THIS PAGE, AND DISCLAIMS (PURSUANT TO SECTION 327.411 RSMO) SPECIFICATION, ESTIMATES, REPORTS, OR OTHER DOCUMENTS OR INSTRUMENTS NOT SEALED BY THE UNDERSIGNED PROFESSIONAL RELATING TO OR INTENDED TO BE USED FOR ANY PART OR PARTS OF THE PROJECT TO WHICH THIS PAGE REFERS.

MAINTENANCE OF TRAFFIC LEGEND

- COMPLETED CONSTRUCTION
- WORK ZONE
- TEMPORARY PAVEMENT
- TEMPORARY PAVEMENT PLACED IN PREVIOUS STAGE
- TEMPORARY PAVEMENT TO BE REMOVED IN CURRENT STAGE
- TRAFFIC FLOW
- TEMPORARY LONG-TERM RUMBLE STRIP
- TYPE III MOVEABLE BARRICADE
- DIRECTONAL INDICATOR BARRICADE
- CHANNELIZER
- SIGN (SINGLE SIDED)
- CHANGEABLE MESSAGE SIGN
- FLASHING ARROW PANEL

STRIPING NOTES

1. 4-INCH TEMPORARY PAVEMENT MARKING PAINT, WHITE, SOLID
2. 4-INCH TEMPORARY PAVEMENT MARKING PAINT, WHITE, 10' DASH 30' SKIP
3. 4-INCH TEMPORARY PAVEMENT MARKING PAINT, WHITE, DOTTED
4. 4-INCH TEMPORARY PAVEMENT MARKING PAINT, YELLOW, SOLID

SCALE
0 50 100 150

TRAFFIC CONTROL PLAN
PHASE 1A
SHEET 11 OF 14

STATE OF MISSOURI
JONATHAN R. LOOS
NUMBER PE-2017000326
PROFESSIONAL ENGINEER

DATE PREPARED	
3/20/2026	
ROUTE I-270	STATE MO
DISTRICT STL	SHEET NO. 46
COUNTY ST. LOUIS	
JOB NO. JSL0021	
CONTRACT ID.	
PROJECT NO.	
BRIDGE NO.	

DESCRIPTION | DATE

IF A SEAL IS PRESENT ON THIS SHEET IT HAS BEEN ELECTRONICALLY SEALED AND DATED.

MISSOURI HIGHWAYS AND TRANSPORTATION COMMISSION
MoDOT
105 WEST CAPITOL
JEFFERSON CITY, MO 65102
1-888-ASK-MODOT (1-888-275-6636)

HORNER SHIFRIN
401 S. 18TH ST., STE. 400 ST. LOUIS, MO 63103
314-531-4321 - FAX 314-531-6966
WWW.HORNERSHIFRIN.COM
DISCIPLINE: PROFESSIONAL ENGINEERING
CERTIFICATE OF AUTHORITY: 000159
EXPIRATION DATE: DECEMBER 31, 2026

...\H&S\SL0021 MOT\Phase 1A Sheets 12:14:21 PM 3/20/2026

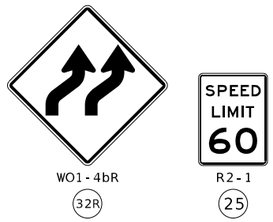

DISCLAIMER

THE PROFESSIONAL WHOSE SIGNATURE AND PERSONAL SEAL APPEAR HEREON ASSUMES RESPONSIBILITY ONLY FOR WHAT APPEARS ON THIS PAGE, AND DISCLAIMS (PURSUANT TO SECTION 327.411 RSMO) SPECIFICATION, ESTIMATES, REPORTS, OR OTHER DOCUMENTS OR INSTRUMENTS NOT SEALED BY THE UNDERSIGNED PROFESSIONAL RELATING TO OR INTENDED TO BE USED FOR ANY PART OR PARTS OF THE PROJECT TO WHICH THIS PAGE REFERS.

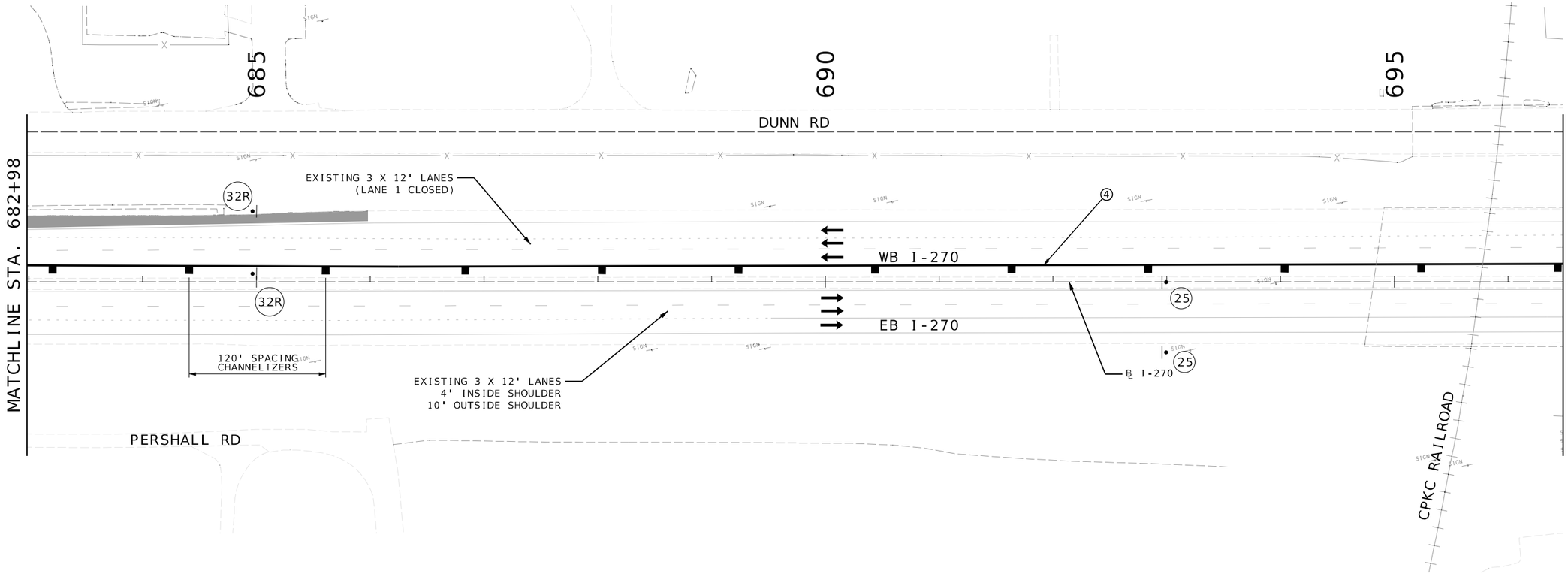

MAINTENANCE OF TRAFFIC LEGEND

- COMPLETED CONSTRUCTION
- WORK ZONE
- TEMPORARY PAVEMENT
- TEMPORARY PAVEMENT PLACED IN PREVIOUS STAGE
- TEMPORARY PAVEMENT TO BE REMOVED IN CURRENT STAGE
- TRAFFIC FLOW
- TEMPORARY LONG-TERM RUMBLE STRIP
- TYPE III MOVEABLE BARRICADE
- DIRECTONAL INDICATOR BARRICADE
- CHANNELIZER
- SIGN (SINGLE SIDED)
- CHANGEABLE MESSAGE SIGN
- FLASHING ARROW PANEL

STRIPING NOTES

1. 4-INCH TEMPORARY PAVEMENT MARKING PAINT, WHITE, SOLID
2. 4-INCH TEMPORARY PAVEMENT MARKING PAINT, WHITE, 10' DASH 30' SKIP
3. 4-INCH TEMPORARY PAVEMENT MARKING PAINT, WHITE, DOTTED
4. 4-INCH TEMPORARY PAVEMENT MARKING PAINT, YELLOW, SOLID

SCALE
0 50 100 150

TRAFFIC CONTROL PLAN
PHASE 1A
SHEET 12 OF 14

STATE OF MISSOURI
JONATHAN R. LODS
NUMBER PE-2017000326
PROFESSIONAL ENGINEER

DATE PREPARED 3/20/2026

ROUTE	STATE
I-270	MO
DISTRICT	SHEET NO.
STL	47

COUNTY: ST. LOUIS
JOB NO.: JSL0021
CONTRACT ID.:
PROJECT NO.:
BRIDGE NO.:

DESCRIPTION	DATE

IF A SEAL IS PRESENT ON THIS SHEET IT HAS BEEN ELECTRONICALLY SEALED AND DATED.

MISSOURI HIGHWAYS AND TRANSPORTATION COMMISSION
105 WEST CAPITOL
JEFFERSON CITY, MO 65102
1-888-ASK-MODOT (1-888-275-6636)

HORNER SHIFRIN
401 S. 18TH ST., STE. 400 ST. LOUIS, MO 63103
314-241-1976 FAX 314-241-1988
WWW.HORNERSHIFRIN.COM
DISCIPLINE: PROFESSIONAL ENGINEERING
CERTIFICATE OF AUTHORITY: 000159
EXPIRATION DATE: DECEMBER 31, 2026

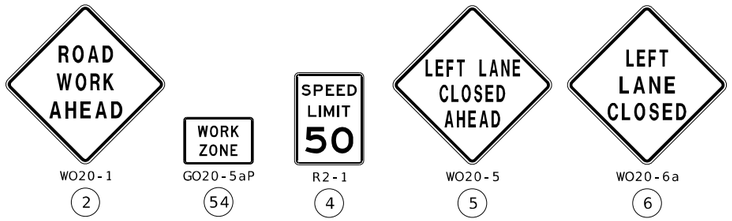

DISCLAIMER

THE PROFESSIONAL WHOSE SIGNATURE AND PERSONAL SEAL APPEAR HEREON ASSUMES RESPONSIBILITY ONLY FOR WHAT APPEARS ON THIS PAGE, AND DISCLAIMS (PURSUANT TO SECTION 327.411 RSMO) SPECIFICATION, ESTIMATES, REPORTS, OR OTHER DOCUMENTS OR INSTRUMENTS NOT SEALED BY THE UNDERSIGNED PROFESSIONAL RELATING TO OR INTENDED TO BE USED FOR ANY PART OR PARTS OF THE PROJECT TO WHICH THIS PAGE REFERS.

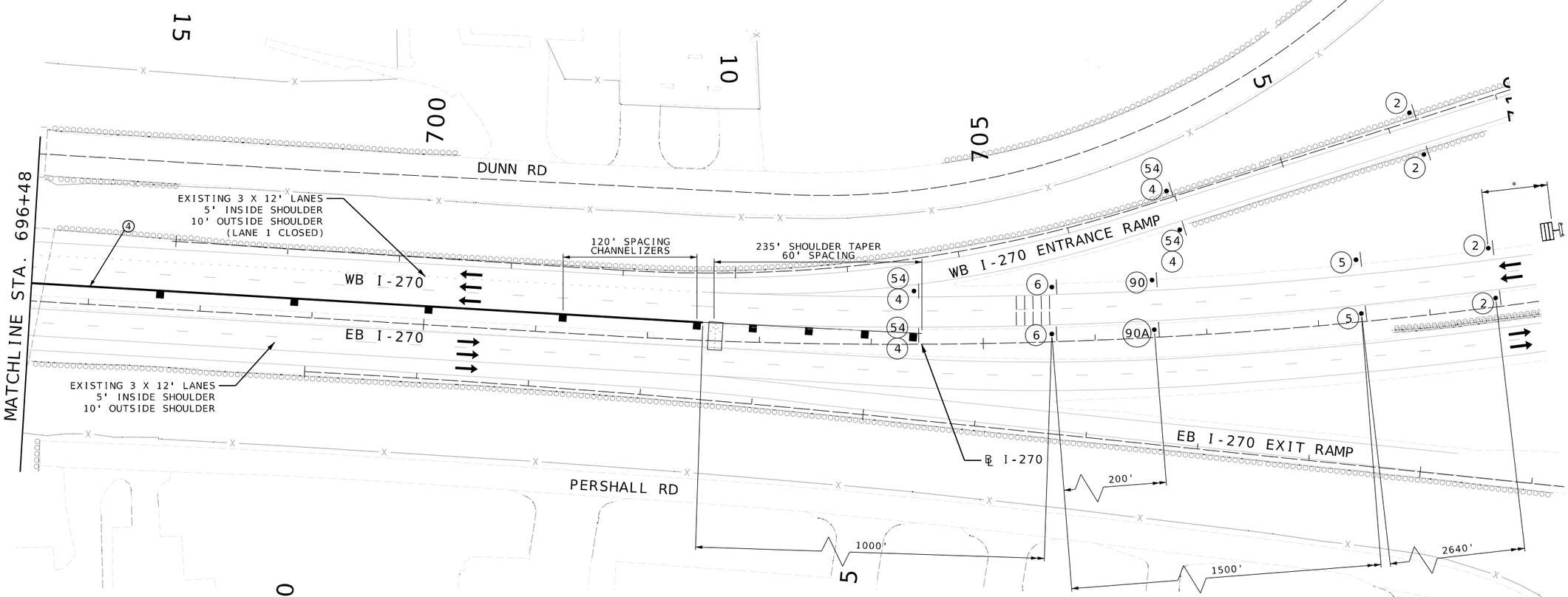

MAINTENANCE OF TRAFFIC LEGEND

- COMPLETED CONSTRUCTION
- WORK ZONE
- TEMPORARY PAVEMENT
- TEMPORARY PAVEMENT PLACED IN PREVIOUS STAGE
- TEMPORARY PAVEMENT TO BE REMOVED IN CURRENT STAGE
- TRAFFIC FLOW
- TEMPORARY LONG-TERM RUMBLE STRIP
- TYPE III MOVEABLE BARRICADE
- DIRECTONAL INDICATOR BARRICADE
- CHANNELIZER
- SIGN (SINGLE SIDED)
- CHANGEABLE MESSAGE SIGN *EXACT LOCATION AND MESSAGE OF CMS TO BE APPROVED BY THE ENGINEER
- FLASHING ARROW PANEL

STRIPING NOTES

1. 4-INCH TEMPORARY PAVEMENT MARKING PAINT, WHITE, SOLID
2. 4-INCH TEMPORARY PAVEMENT MARKING PAINT, WHITE, 10' DASH 30' SKIP
3. 4-INCH TEMPORARY PAVEMENT MARKING PAINT, WHITE, DOTTED
4. 4-INCH TEMPORARY PAVEMENT MARKING PAINT, YELLOW, SOLID

SCALE
0 50 100 150

TRAFFIC CONTROL PLAN
PHASE 1A
SHEET 13 OF 14

STATE OF MISSOURI
JONATHAN R. LODS
NUMBER PE-2017000326
PROFESSIONAL ENGINEER

DATE PREPARED	3/20/2026
ROUTE	I-270
STATE	MO
DISTRICT	STL
SHEET NO.	48
COUNTY	ST. LOUIS
JOB NO.	JSL0021
CONTRACT ID.	.
PROJECT NO.	.
BRIDGE NO.	.

DESCRIPTION

DATE

MISSOURI HIGHWAYS AND TRANSPORTATION COMMISSION

MoDOT

105 WEST CAPITOL
JEFFERSON CITY, MO 65102
1-888-ASK-MODOT (1-888-275-6636)

HORNER SHIFRIN

401 S. 18TH ST., STE. 400 ST. LOUIS, MO 63103
314-531-4321 - FAX 314-531-6966
WWW.HORNERSHIFRIN.COM
DISCIPLINE: PROFESSIONAL ENGINEERING
CERTIFICATE OF AUTHORITY: 000159
EXPIRATION DATE: DECEMBER 31, 2026

IF A SEAL IS PRESENT ON THIS SHEET IT HAS BEEN ELECTRONICALLY SEALED AND DATED.

...\H&S\SL0021 MOT\Phase 1A Sheets 12:14:24 PM 3/20/2026

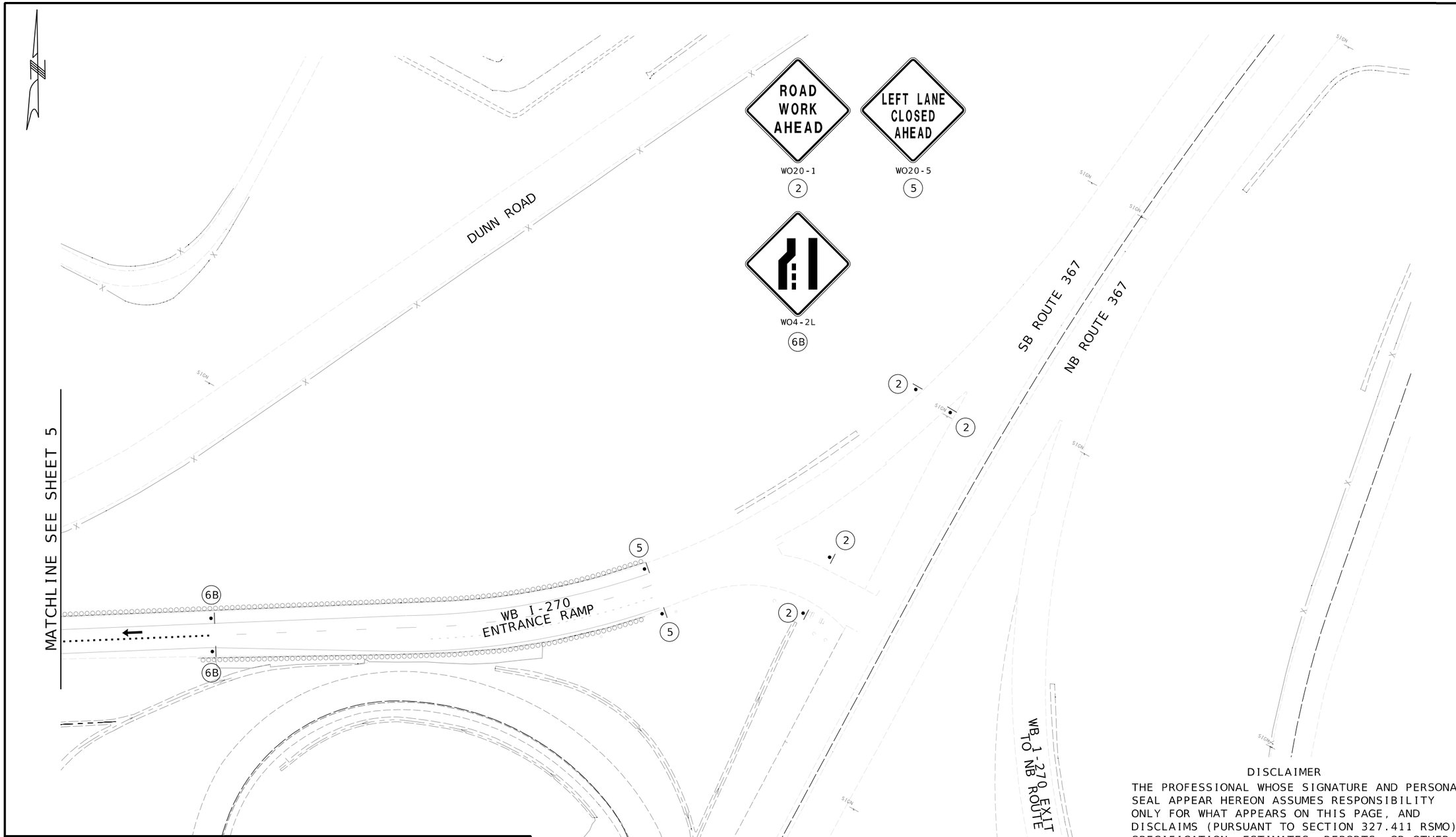

MAINTENANCE OF TRAFFIC LEGEND

- COMPLETED CONSTRUCTION
- WORK ZONE
- TEMPORARY PAVEMENT
- TEMPORARY PAVEMENT PLACED IN PREVIOUS STAGE
- TEMPORARY PAVEMENT TO BE REMOVED IN CURRENT STAGE
- TRAFFIC FLOW
- TEMPORARY LONG-TERM RUMBLE STRIP
- TYPE III MOVEABLE BARRICADE
- DIRECTONAL INDICATOR BARRICADE
- CHANNELIZER
- SIGN (SINGLE SIDED)
- CHANGEABLE MESSAGE SIGN
- FLASHING ARROW PANEL

DISCLAIMER

THE PROFESSIONAL WHOSE SIGNATURE AND PERSONAL SEAL APPEAR HEREON ASSUMES RESPONSIBILITY ONLY FOR WHAT APPEARS ON THIS PAGE, AND DISCLAIMS (PURSUANT TO SECTION 327.411 RSMO) SPECIFICATION, ESTIMATES, REPORTS, OR OTHER DOCUMENTS OR INSTRUMENTS NOT SEALED BY THE UNDERSIGNED PROFESSIONAL RELATING TO OR INTENDED TO BE USED FOR ANY PART OR PARTS OF THE PROJECT TO WHICH THIS PAGE REFERS.

SCALE

0 50 100 150

TRAFFIC CONTROL PLAN
PHASE 1A
SHEET 14 OF 14

STATE OF MISSOURI
JONATHAN R. LODS
NUMBER PE-2017000326
PROFESSIONAL ENGINEER

DATE PREPARED	
5/1/2026	
ROUTE I-270	STATE MO
DISTRICT STL	SHEET NO. 49
COUNTY ST. LOUIS	
JOB NO. JSL0021	
CONTRACT ID. .	
PROJECT NO. .	
BRIDGE NO. .	

DATE	DESCRIPTION
.	.
.	.
.	.
.	.
.	.
.	.

MISSOURI HIGHWAYS AND TRANSPORTATION COMMISSION

MoDOT

105 WEST CAPITOL
JEFFERSON CITY, MO 65102
1-888-ASK-MODOT (1-888-275-6636)

HORNER SHIFRIN

401 S. 18TH ST., STE. 400 ST. LOUIS, MO 63103
314-531-4321 - FAX 314-531-6966
WWW.HORNERSHIFRIN.COM
DISCIPLINE: PROFESSIONAL ENGINEERING
CERTIFICATE OF AUTHORITY: 000159
EXPIRATION DATE: DECEMBER 31, 2026

IF A SEAL IS PRESENT ON THIS SHEET IT HAS BEEN ELECTRONICALLY SEALED AND DATED.

...\H&S\SL0021 MOT\Phase 1A Sheets 11:58:33 AM 5/1/2026

GENERAL TRAFFIC CONTROL NOTES:

1. ANY EXISTING GROUND-MOUNTED SIGN THAT CONFLICTS WITH THE TRAFFIC CONTROL SIGNING SHALL BE COMPLETELY COVERED OR REMOVED AT NO DIRECT PAY. COVERING OF EXISTING OVERHEAD SIGNS SHALL BE AS NOTED IN THE PLANS AND PAID AS EACH UNDER BID ITEM "COVER EXISTING OVERHEAD SIGN".

2. PLACEMENT OF TRAFFIC CONTROL SIGNS ARE APPROXIMATE AND MAY BE ADJUSTED TO FIT FIELD CONDITIONS AS APPROVED BY THE ENGINEER.

3. SIGN AND DEVICE LOCATIONS SHALL BE FIELD VERIFIED AND APPROVED BY THE ENGINEER.

4. NO DIRECT PAY WILL BE MADE FOR THE RELOCATION OR TEMPORARY MOUNTING OF EXISTING SIGNS DISPLACED BY THE TEMPORARY WIDENING. METHOD OF TEMPORARY MOUNTING AND LOCATION OF THESE SIGNS TO BE APPROVED BY THE ENGINEER.



DISCLAIMER

THE PROFESSIONAL WHOSE SIGNATURE AND PERSONAL SEAL APPEAR HEREON ASSUMES RESPONSIBILITY ONLY FOR WHAT APPEARS ON THIS PAGE, AND DISCLAIMS (PURSUANT TO SECTION 327.411 RSMO) SPECIFICATION, ESTIMATES, REPORTS, OR OTHER DOCUMENTS OR INSTRUMENTS NOT SEALED BY THE UNDERSIGNED PROFESSIONAL RELATING TO OR INTENDED TO BE USED FOR ANY PART OR PARTS OF THE PROJECT TO WHICH THIS PAGE REFERS.

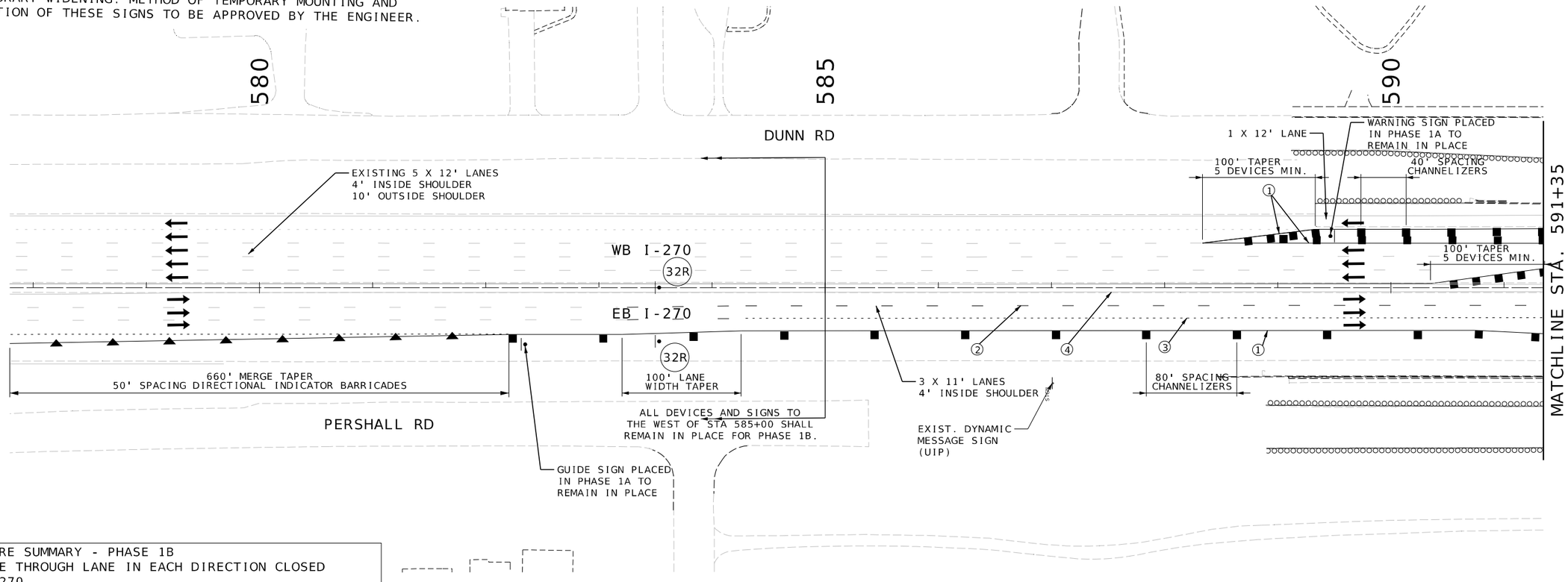

CLOSURE SUMMARY - PHASE 1B
1. ONE THROUGH LANE IN EACH DIRECTION CLOSED ON I-270.
2. DUNN RD. ON RAMP CLOSED.

MOT PHASE 1B
1. SHIFT I-270 TRAFFIC TO OUTSIDE SHOULDERS.
2. CONSTRUCT I-270 PAVEMENT AS SHOWN ON THE PLANS.

MAINTENANCE OF TRAFFIC LEGEND

- COMPLETED CONSTRUCTION
- WORK ZONE
- TEMPORARY PAVEMENT
- TEMPORARY PAVEMENT PLACED IN PREVIOUS STAGE
- TEMPORARY PAVEMENT TO BE REMOVED IN CURRENT STAGE
- TRAFFIC FLOW
- TEMPORARY LONG-TERM RUMBLE STRIP
- TYPE III MOVEABLE BARRICADE
- DIRECTONAL INDICATOR BARRICADE
- CHANNELIZER
- SIGN (SINGLE SIDED)
- CHANGEABLE MESSAGE SIGN
- FLASHING ARROW PANEL

STRIPING NOTES

1. 4-INCH TEMPORARY PAVEMENT MARKING PAINT, WHITE, SOLID
2. 4-INCH TEMPORARY PAVEMENT MARKING PAINT, WHITE, 10' DASH 30' SKIP
3. 4-INCH TEMPORARY PAVEMENT MARKING PAINT, WHITE, DOTTED
4. 4-INCH TEMPORARY PAVEMENT MARKING PAINT, YELLOW, SOLID

SCALE
0 50 100 150

TRAFFIC CONTROL PLAN
PHASE 1B
SHEET 1 OF 10

STATE OF MISSOURI
JONATHAN R. LODS
NUMBER PE-2017000326
PROFESSIONAL ENGINEER

DATE PREPARED 3/20/2026

ROUTE	STATE
I-270	MO
DISTRICT	SHEET NO.
STL	50

COUNTY: ST. LOUIS
JOB NO.: JSL0021
CONTRACT ID.:
PROJECT NO.:
BRIDGE NO.:

DESCRIPTION	DATE

IF A SEAL IS PRESENT ON THIS SHEET IT HAS BEEN ELECTRONICALLY SEALED AND DATED.

MISSOURI HIGHWAYS AND TRANSPORTATION COMMISSION
105 WEST CAPITOL
JEFFERSON CITY, MO 65102
1-888-ASK-MODOT (1-888-275-6636)

HORNER SHIFRIN
401 S. 18TH ST., STE. 400 ST. LOUIS, MO 63103
314-621-6115 FAX: 314-621-5466
WWW.HORNERSHIFRIN.COM
DISCIPLINE: PROFESSIONAL ENGINEERING
CERTIFICATE OF AUTHORITY: 000159
EXPIRATION DATE: DECEMBER 31, 2026

REV.

...\H&S\SL0021 MOT\Phase 1B Sheets 12:14:36 PM 3/20/2026

DISCLAIMER

THE PROFESSIONAL WHOSE SIGNATURE AND PERSONAL SEAL APPEAR HEREON ASSUMES RESPONSIBILITY ONLY FOR WHAT APPEARS ON THIS PAGE, AND DISCLAIMS (PURSUANT TO SECTION 327.411 RSMO) SPECIFICATION, ESTIMATES, REPORTS, OR OTHER DOCUMENTS OR INSTRUMENTS NOT SEALED BY THE UNDERSIGNED PROFESSIONAL RELATING TO OR INTENDED TO BE USED FOR ANY PART OR PARTS OF THE PROJECT TO WHICH THIS PAGE REFERS.

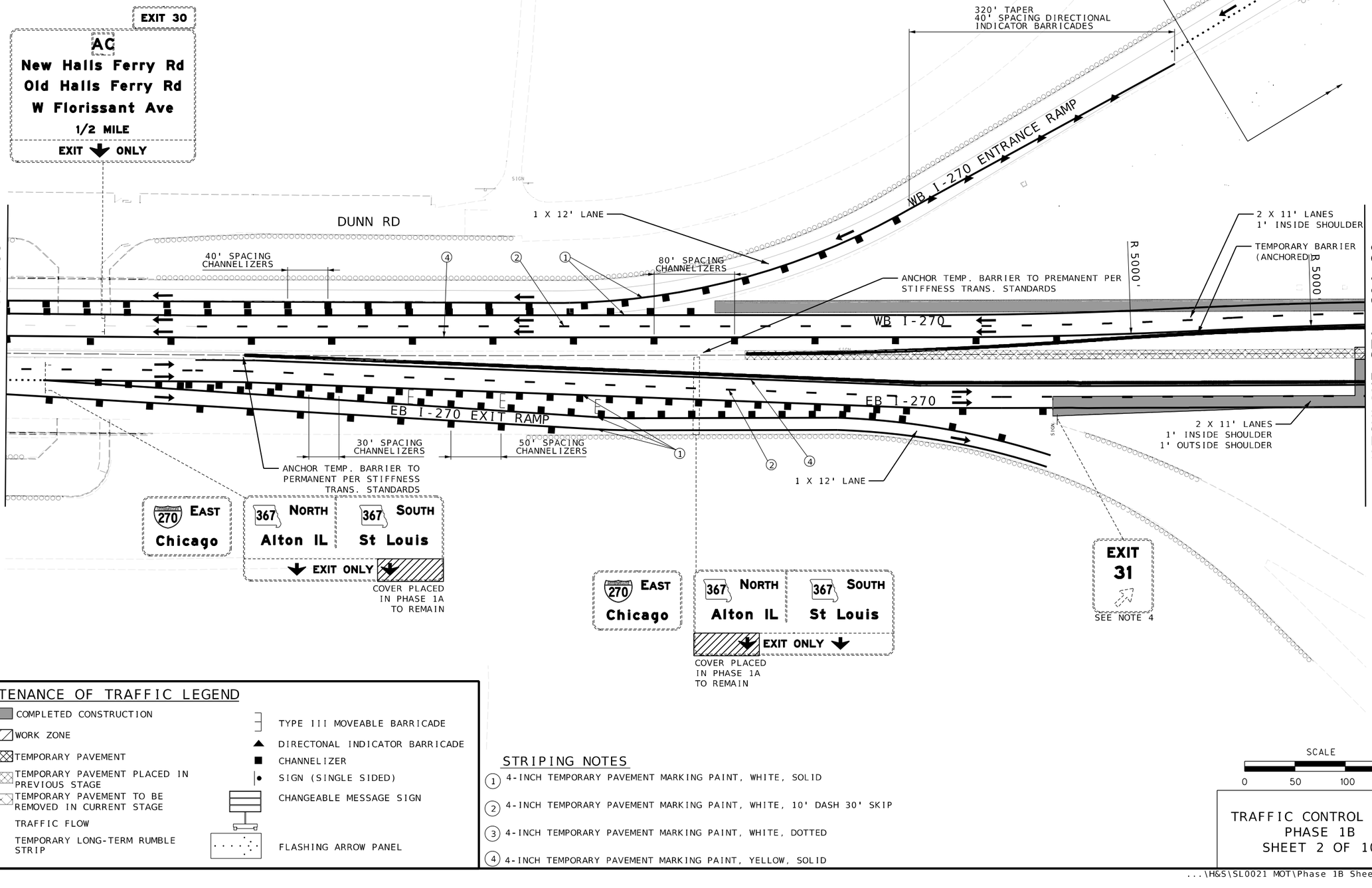

MAINTENANCE OF TRAFFIC LEGEND

- COMPLETED CONSTRUCTION
- WORK ZONE
- TEMPORARY PAVEMENT
- TEMPORARY PAVEMENT PLACED IN PREVIOUS STAGE
- TEMPORARY PAVEMENT TO BE REMOVED IN CURRENT STAGE
- TRAFFIC FLOW
- TEMPORARY LONG-TERM RUMBLE STRIP
- TYPE III MOVEABLE BARRICADE
- DIRECTONAL INDICATOR BARRICADE
- CHANNELIZER
- SIGN (SINGLE SIDED)
- CHANGEABLE MESSAGE SIGN
- FLASHING ARROW PANEL

STRIPING NOTES

1. 4-INCH TEMPORARY PAVEMENT MARKING PAINT, WHITE, SOLID
2. 4-INCH TEMPORARY PAVEMENT MARKING PAINT, WHITE, 10' DASH 30' SKIP
3. 4-INCH TEMPORARY PAVEMENT MARKING PAINT, WHITE, DOTTED
4. 4-INCH TEMPORARY PAVEMENT MARKING PAINT, YELLOW, SOLID

SCALE
0 50 100 150

TRAFFIC CONTROL PLAN PHASE 1B SHEET 2 OF 10

STATE OF MISSOURI
JONATHAN R. LOOS
NUMBER PE-2017000326
PROFESSIONAL ENGINEER

DATE PREPARED 3/20/2026
ROUTE I-270 | STATE MO
DISTRICT STL | SHEET NO. 51
COUNTY ST. LOUIS
JOB NO. JSL0021
CONTRACT ID.
PROJECT NO.
BRIDGE NO.

DESCRIPTION	DATE

IF A SEAL IS PRESENT ON THIS SHEET IT HAS BEEN ELECTRONICALLY SEALED AND DATED.

MISSOURI HIGHWAYS AND TRANSPORTATION COMMISSION
105 WEST CAPITOL
JEFFERSON CITY, MO 65102
1-888-ASK-MODOT (1-888-275-6636)

HORNER SHIFRIN
401 S. 18TH ST., STE. 400 ST. LOUIS, MO 63103
314.241.1976 FAX 314.241.1666
WWW.HORNERSHIFRIN.COM
DISCIPLINE: PROFESSIONAL ENGINEERING
CERTIFICATE OF AUTHORITY: 000159
EXPIRATION DATE: DECEMBER 31, 2026

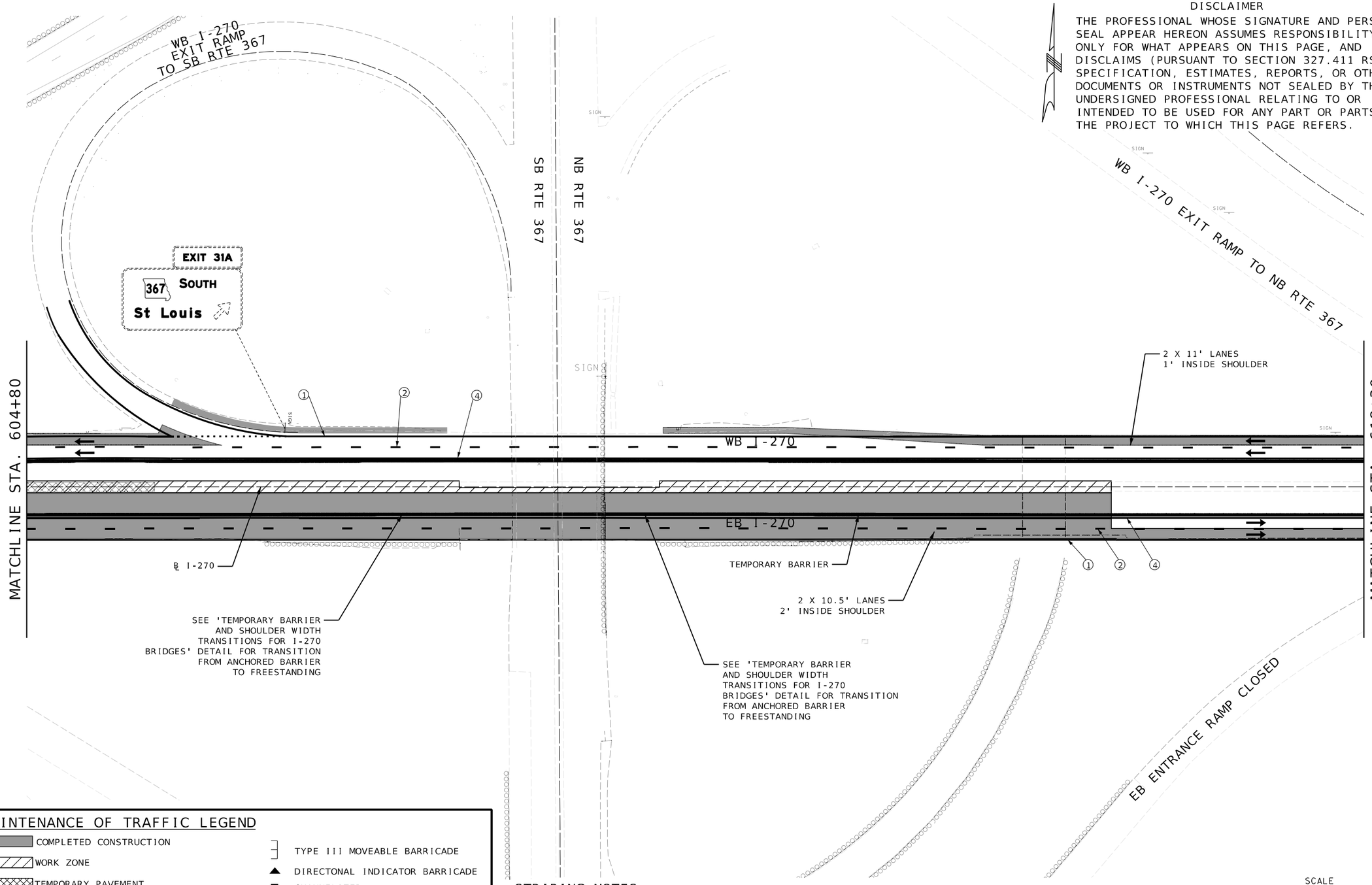

DISCLAIMER

THE PROFESSIONAL WHOSE SIGNATURE AND PERSONAL SEAL APPEAR HEREON ASSUMES RESPONSIBILITY ONLY FOR WHAT APPEARS ON THIS PAGE, AND DISCLAIMS (PURSUANT TO SECTION 327.411 RSMO) SPECIFICATION, ESTIMATES, REPORTS, OR OTHER DOCUMENTS OR INSTRUMENTS NOT SEALED BY THE UNDERSIGNED PROFESSIONAL RELATING TO OR INTENDED TO BE USED FOR ANY PART OR PARTS OF THE PROJECT TO WHICH THIS PAGE REFERS.

MAINTENANCE OF TRAFFIC LEGEND

- COMPLETED CONSTRUCTION
- WORK ZONE
- TEMPORARY PAVEMENT
- TEMPORARY PAVEMENT PLACED IN PREVIOUS STAGE
- TEMPORARY PAVEMENT TO BE REMOVED IN CURRENT STAGE
- TRAFFIC FLOW
- TEMPORARY LONG-TERM RUMBLE STRIP
- TYPE III MOVEABLE BARRICADE
- DIRECTONAL INDICATOR BARRICADE
- CHANNELIZER
- SIGN (SINGLE SIDED)
- CHANGEABLE MESSAGE SIGN
- FLASHING ARROW PANEL

STRIPING NOTES

1. 4-INCH TEMPORARY PAVEMENT MARKING PAINT, WHITE, SOLID
2. 4-INCH TEMPORARY PAVEMENT MARKING PAINT, WHITE, 10' DASH 30' SKIP
3. 4-INCH TEMPORARY PAVEMENT MARKING PAINT, WHITE, DOTTED
4. 4-INCH TEMPORARY PAVEMENT MARKING PAINT, YELLOW, SOLID

SCALE
0 50 100 150

TRAFFIC CONTROL PLAN
PHASE 1B
SHEET 3 OF 10

STATE OF MISSOURI
JONATHAN R. LOOS
NUMBER PE-2017000326
PROFESSIONAL ENGINEER

DATE PREPARED	
3/20/2026	
ROUTE I-270	STATE MO
DISTRICT STL	SHEET NO. 52
COUNTY ST. LOUIS	
JOB NO. JSL0021	
CONTRACT ID.	
PROJECT NO.	
BRIDGE NO.	

DESCRIPTION

DATE

MISSOURI HIGHWAYS AND TRANSPORTATION COMMISSION

MoDOT
105 WEST CAPITOL
JEFFERSON CITY, MO 65102
1-888-ASK-MODOT (1-888-275-6636)

HORNER SHIFRIN
401 S. 18TH ST., STE. 400 ST. LOUIS, MO 63103
314-531-4321 - FAX 314-531-6966
WWW.HORNERSHIFRIN.COM
DISCIPLINE: PROFESSIONAL ENGINEERING
CERTIFICATE OF AUTHORITY: 000159
EXPIRATION DATE: DECEMBER 31, 2026

IF A SEAL IS PRESENT ON THIS SHEET IT HAS BEEN ELECTRONICALLY SEALED AND DATED.

...\H&S\SL0021 MOT\Phase 1B Sheets 12:14:39 PM 3/20/2026

DISCLAIMER

THE PROFESSIONAL WHOSE SIGNATURE AND PERSONAL SEAL APPEAR HEREON ASSUMES RESPONSIBILITY ONLY FOR WHAT APPEARS ON THIS PAGE, AND DISCLAIMS (PURSUANT TO SECTION 327.411 RSMO) SPECIFICATION, ESTIMATES, REPORTS, OR OTHER DOCUMENTS OR INSTRUMENTS NOT SEALED BY THE UNDERSIGNED PROFESSIONAL RELATING TO OR INTENDED TO BE USED FOR ANY PART OR PARTS OF THE PROJECT TO WHICH THIS PAGE REFERS.

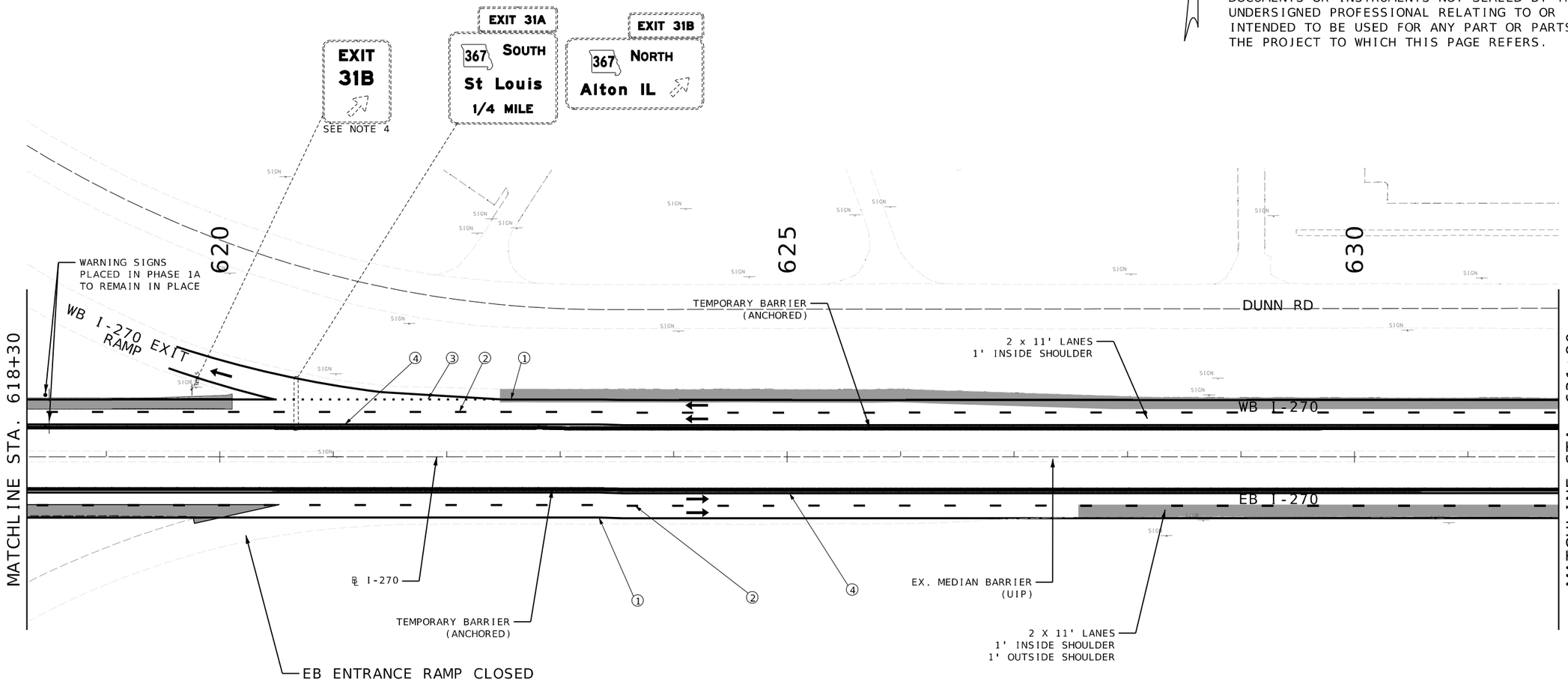

MAINTENANCE OF TRAFFIC LEGEND

- COMPLETED CONSTRUCTION
- WORK ZONE
- TEMPORARY PAVEMENT
- TEMPORARY PAVEMENT PLACED IN PREVIOUS STAGE
- TEMPORARY PAVEMENT TO BE REMOVED IN CURRENT STAGE
- TRAFFIC FLOW
- TEMPORARY LONG-TERM RUMBLE STRIP
- TYPE III MOVEABLE BARRICADE
- DIRECTONAL INDICATOR BARRICADE
- CHANNELIZER
- SIGN (SINGLE SIDED)
- CHANGEABLE MESSAGE SIGN
- FLASHING ARROW PANEL

STRIPING NOTES

1. 4-INCH TEMPORARY PAVEMENT MARKING PAINT, WHITE, SOLID
2. 4-INCH TEMPORARY PAVEMENT MARKING PAINT, WHITE, 10' DASH 30' SKIP
3. 4-INCH TEMPORARY PAVEMENT MARKING PAINT, WHITE, DOTTED
4. 4-INCH TEMPORARY PAVEMENT MARKING PAINT, YELLOW, SOLID

SCALE

0 50 100 150

TRAFFIC CONTROL PLAN
PHASE 1B
SHEET 4 OF 10

STATE OF MISSOURI
JONATHAN R. LODS
NUMBER PE-2017000326
PROFESSIONAL ENGINEER

DATE PREPARED	3/20/2026
ROUTE	I-270
STATE	MO
DISTRICT	STL
SHEET NO.	53
COUNTY	ST. LOUIS
JOB NO.	JSL0021
CONTRACT ID.	.
PROJECT NO.	.
BRIDGE NO.	.

DESCRIPTION

DATE

MISSOURI HIGHWAYS AND TRANSPORTATION COMMISSION

MoDOT

105 WEST CAPITOL
JEFFERSON CITY, MO 65102
1-888-ASK-MODOT (1-888-275-6636)

HORNER SHIFRIN

401 S. 18TH ST., STE. 400 ST. LOUIS, MO 63103
314-531-4321 - FAX 314-531-6966
WWW.HORNERSHIFRIN.COM
DISCIPLINE: PROFESSIONAL ENGINEERING
CERTIFICATE OF AUTHORITY: 000159
EXPIRATION DATE: DECEMBER 31, 2026

IF A SEAL IS PRESENT ON THIS SHEET IT HAS BEEN ELECTRONICALLY SEALED AND DATED.

...\H&S\SL0021 MOT\Phase 1B Sheets 12:14:43 PM 3/20/2026

DISCLAIMER

THE PROFESSIONAL WHOSE SIGNATURE AND PERSONAL SEAL APPEAR HEREON ASSUMES RESPONSIBILITY ONLY FOR WHAT APPEARS ON THIS PAGE, AND DISCLAIMS (PURSUANT TO SECTION 327.411 RSMO) SPECIFICATION, ESTIMATES, REPORTS, OR OTHER DOCUMENTS OR INSTRUMENTS NOT SEALED BY THE UNDERSIGNED PROFESSIONAL RELATING TO OR INTENDED TO BE USED FOR ANY PART OR PARTS OF THE PROJECT TO WHICH THIS PAGE REFERS.

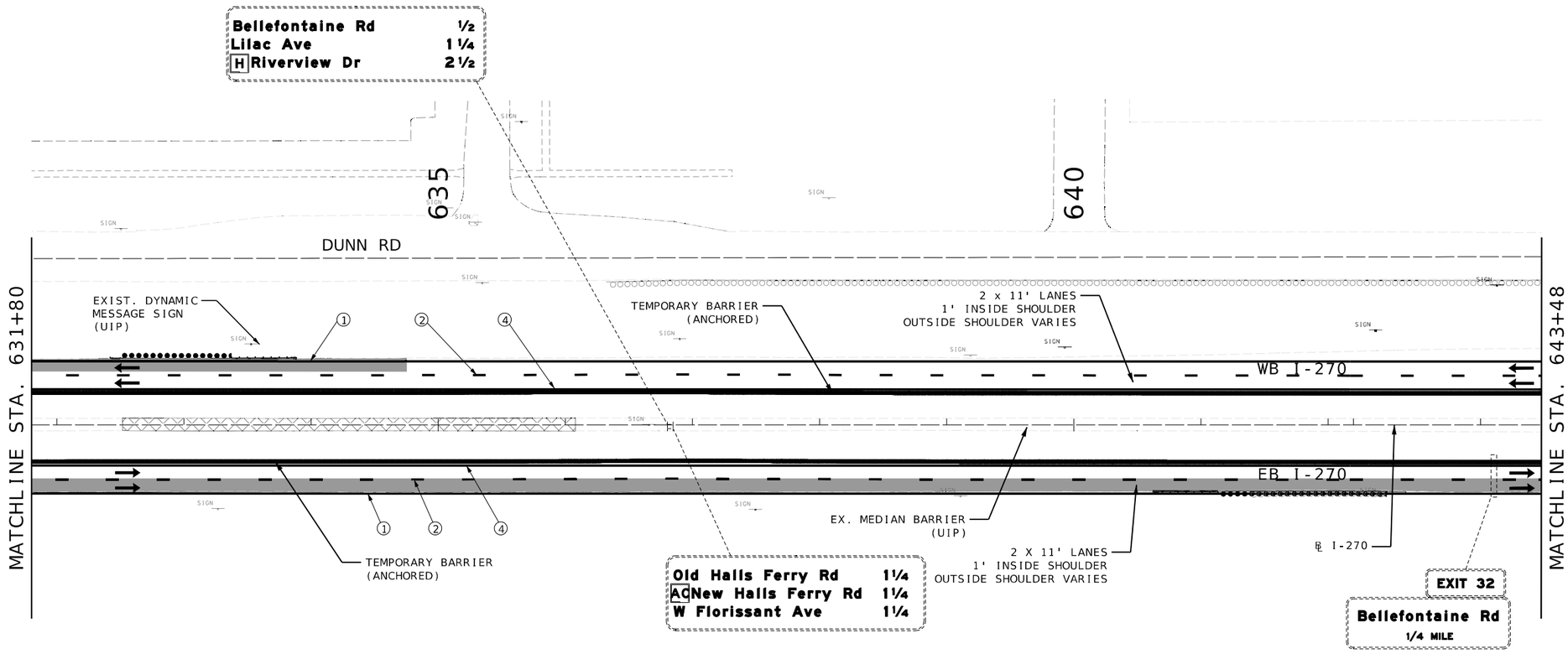

MAINTENANCE OF TRAFFIC LEGEND

- COMPLETED CONSTRUCTION
- WORK ZONE
- TEMPORARY PAVEMENT
- TEMPORARY PAVEMENT PLACED IN PREVIOUS STAGE
- TEMPORARY PAVEMENT TO BE REMOVED IN CURRENT STAGE
- TRAFFIC FLOW
- TEMPORARY LONG-TERM RUMBLE STRIP
- TYPE III MOVEABLE BARRICADE
- DIRECTONAL INDICATOR BARRICADE
- CHANNELIZER
- SIGN (SINGLE SIDED)
- CHANGEABLE MESSAGE SIGN
- FLASHING ARROW PANEL

STRIPING NOTES

1. 4-INCH TEMPORARY PAVEMENT MARKING PAINT, WHITE, SOLID
2. 4-INCH TEMPORARY PAVEMENT MARKING PAINT, WHITE, 10' DASH 30' SKIP
3. 4-INCH TEMPORARY PAVEMENT MARKING PAINT, WHITE, DOTTED
4. 4-INCH TEMPORARY PAVEMENT MARKING PAINT, YELLOW, SOLID

SCALE

0 50 100 150

TRAFFIC CONTROL PLAN
PHASE 1B
SHEET 5 OF 10

STATE OF MISSOURI
JONATHAN R. LODS
NUMBER PE-2017000326
PROFESSIONAL ENGINEER

DATE PREPARED	3/20/2026
ROUTE	I-270
STATE	MO
DISTRICT	STL
SHEET NO.	54
COUNTY	ST. LOUIS
JOB NO.	JSL0021
CONTRACT ID.	.
PROJECT NO.	.
BRIDGE NO.	.

DATE	DESCRIPTION
.	.

IF A SEAL IS PRESENT ON THIS SHEET IT HAS BEEN ELECTRONICALLY SEALED AND DATED.

MISSOURI HIGHWAYS AND TRANSPORTATION COMMISSION

MoDOT

105 WEST CAPITOL
JEFFERSON CITY, MO 65102
1-888-ASK-MODOT (1-888-275-6636)

HORNER SHIFRIN

401 S. 18TH ST., STE. 400 ST. LOUIS, MO 63103
314-531-4321 - FAX 314-531-6966
WWW.HORNERSHIFRIN.COM
DISCIPLINE: PROFESSIONAL ENGINEERING
CERTIFICATE OF AUTHORITY: 000159
EXPIRATION DATE: DECEMBER 31, 2026

...\H&S\SL0021 MOT\Phase 1B Sheets 12:14:46 PM 3/20/2026

DISCLAIMER

THE PROFESSIONAL WHOSE SIGNATURE AND PERSONAL SEAL APPEAR HEREON ASSUMES RESPONSIBILITY ONLY FOR WHAT APPEARS ON THIS PAGE, AND DISCLAIMS (PURSUANT TO SECTION 327.411 RSMO) SPECIFICATION, ESTIMATES, REPORTS, OR OTHER DOCUMENTS OR INSTRUMENTS NOT SEALED BY THE UNDERSIGNED PROFESSIONAL RELATING TO OR INTENDED TO BE USED FOR ANY PART OR PARTS OF THE PROJECT TO WHICH THIS PAGE REFERS.

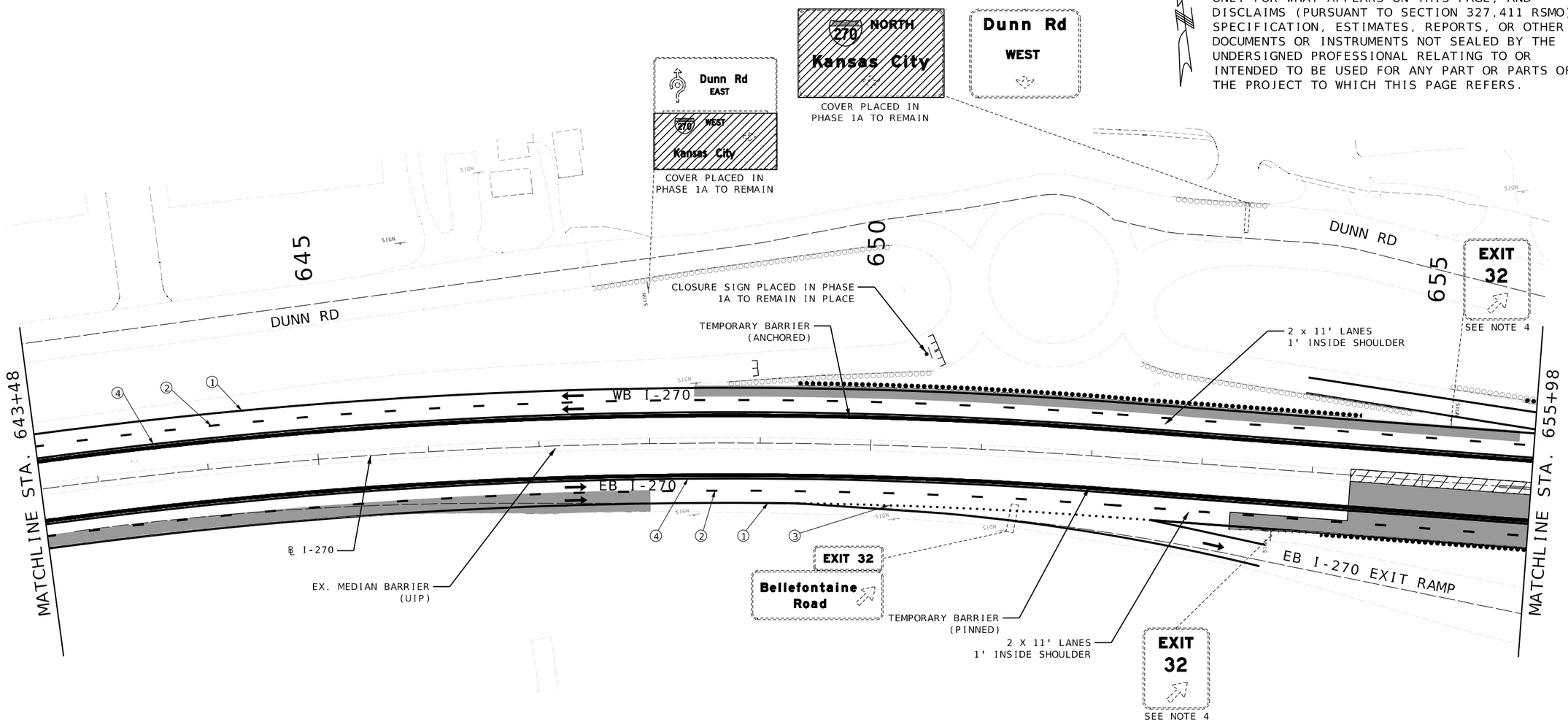

MAINTENANCE OF TRAFFIC LEGEND

- COMPLETED CONSTRUCTION
- WORK ZONE
- TEMPORARY PAVEMENT
- TEMPORARY PAVEMENT PLACED IN PREVIOUS STAGE
- TEMPORARY PAVEMENT TO BE REMOVED IN CURRENT STAGE
- TRAFFIC FLOW
- TEMPORARY LONG-TERM RUMBLE STRIP
- TYPE III MOVEABLE BARRICADE
- DIRECTONAL INDICATOR BARRICADE
- CHANNELIZER
- SIGN (SINGLE SIDED)
- CHANGEABLE MESSAGE SIGN
- FLASHING ARROW PANEL

STRIPING NOTES

1. 4-INCH TEMPORARY PAVEMENT MARKING PAINT, WHITE, SOLID
2. 4-INCH TEMPORARY PAVEMENT MARKING PAINT, WHITE, 10' DASH 30' SKIP
3. 4-INCH TEMPORARY PAVEMENT MARKING PAINT, WHITE, DOTTED
4. 4-INCH TEMPORARY PAVEMENT MARKING PAINT, YELLOW, SOLID

SCALE
0 50 100 150

TRAFFIC CONTROL PLAN
PHASE 1B
SHEET 6 OF 10

STATE OF MISSOURI
JONATHAN R. LOOS
NUMBER PE-2017000326
PROFESSIONAL ENGINEER

DATE PREPARED	3/20/2026
ROUTE	I-270
STATE	MO
DISTRICT	STL
SHEET NO.	55
COUNTY	ST. LOUIS
JOB NO.	JSL0021
CONTRACT ID.	.
PROJECT NO.	.
BRIDGE NO.	.

DATE	DESCRIPTION
.	.

IF A SEAL IS PRESENT ON THIS SHEET IT HAS BEEN ELECTRONICALLY SEALED AND DATED.

MISSOURI HIGHWAYS AND TRANSPORTATION COMMISSION
MoDOT
105 WEST CAPITOL
JEFFERSON CITY, MO 65102
1-888-ASK-MODOT (1-888-275-6636)

HORNER SHIFRIN
401 S. 18TH ST., STE. 400 ST. LOUIS, MO 63103
314-531-4321 • FAX 314-531-6966
WWW.HORNERSHIFRIN.COM
DISCIPLINE: PROFESSIONAL ENGINEERING
CERTIFICATE OF AUTHORITY: 000159
EXPIRATION DATE: DECEMBER 31, 2026

...\H&S\SL0021 MOT\Phase 1B Sheets 12:14:49 PM 3/20/2026

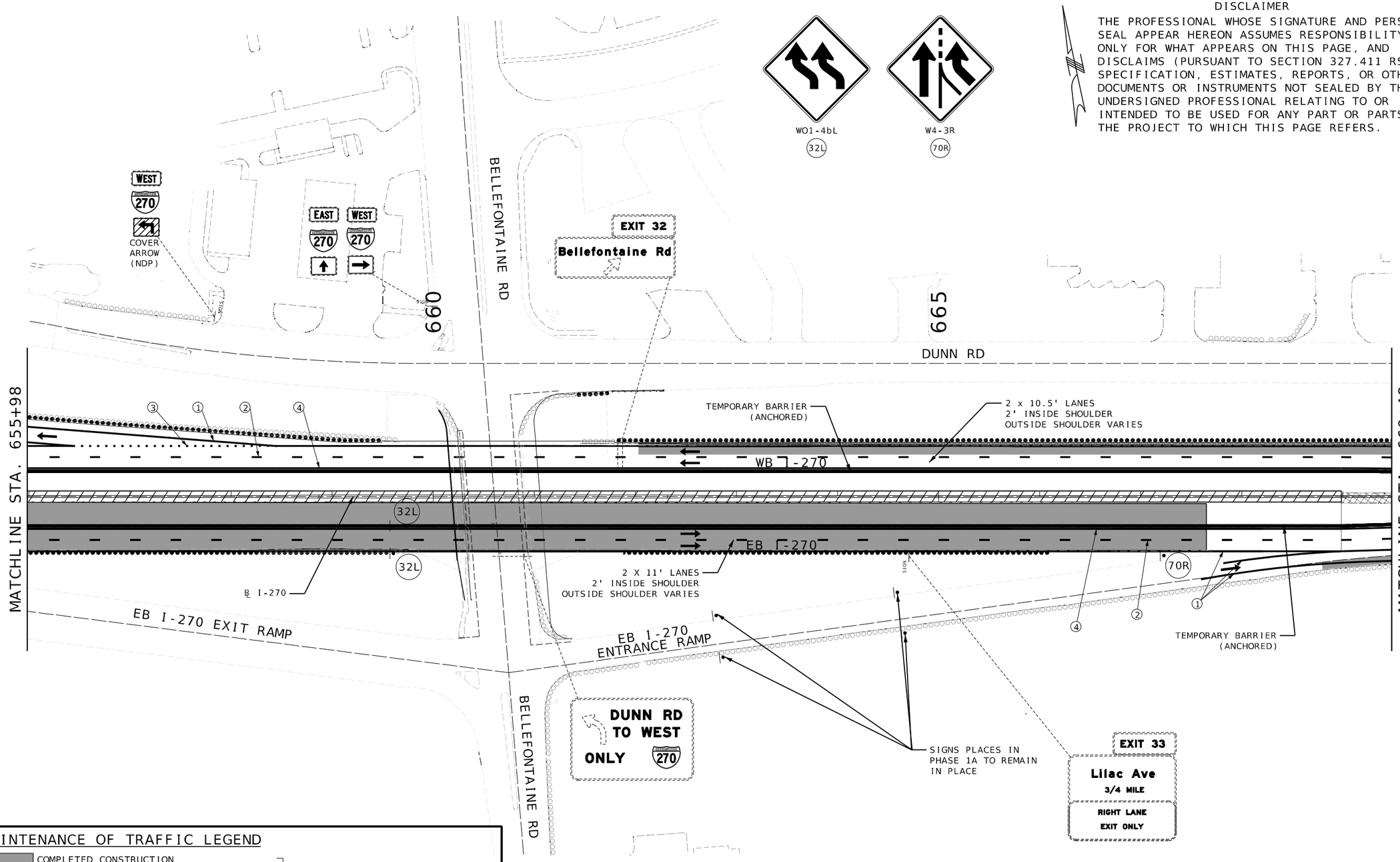

MAINTENANCE OF TRAFFIC LEGEND

- COMPLETED CONSTRUCTION
- WORK ZONE
- TEMPORARY PAVEMENT
- TEMPORARY PAVEMENT PLACED IN PREVIOUS STAGE
- TEMPORARY PAVEMENT TO BE REMOVED IN CURRENT STAGE
- TRAFFIC FLOW
- TEMPORARY LONG-TERM RUMBLE STRIP
- TYPE III MOVEABLE BARRICADE
- DIRECTONAL INDICATOR BARRICADE
- CHANNELIZER
- SIGN (SINGLE SIDED)
- CHANGEABLE MESSAGE SIGN
- FLASHING ARROW PANEL

STRIPING NOTES

1. 4-INCH TEMPORARY PAVEMENT MARKING PAINT, WHITE, SOLID
2. 4-INCH TEMPORARY PAVEMENT MARKING PAINT, WHITE, 10' DASH 30' SKIP
3. 4-INCH TEMPORARY PAVEMENT MARKING PAINT, WHITE, DOTTED
4. 4-INCH TEMPORARY PAVEMENT MARKING PAINT, YELLOW, SOLID

SCALE
0 50 100 150

TRAFFIC CONTROL PLAN PHASE 1B SHEET 7 OF 10

DISCLAIMER

THE PROFESSIONAL WHOSE SIGNATURE AND PERSONAL SEAL APPEAR HEREON ASSUMES RESPONSIBILITY ONLY FOR WHAT APPEARS ON THIS PAGE, AND DISCLAIMS (PURSUANT TO SECTION 327.411 RSMO) SPECIFICATION, ESTIMATES, REPORTS, OR OTHER DOCUMENTS OR INSTRUMENTS NOT SEALED BY THE UNDERSIGNED PROFESSIONAL RELATING TO OR INTENDED TO BE USED FOR ANY PART OR PARTS OF THE PROJECT TO WHICH THIS PAGE REFERS.

STATE OF MISSOURI
JONATHAN R. LODS
NUMBER PE-2017000326
PROFESSIONAL ENGINEER

DATE PREPARED	3/26/2026
ROUTE	STATE
I-270	MO
DISTRICT	SHEET NO.
STL	56
COUNTY	ST. LOUIS
JOB NO.	JSL0021
CONTRACT ID.	.
PROJECT NO.	.
BRIDGE NO.	.

DESCRIPTION	DATE
.	.

IF A SEAL IS PRESENT ON THIS SHEET IT HAS BEEN ELECTRONICALLY SEALED AND DATED.

MISSOURI HIGHWAYS AND TRANSPORTATION COMMISSION
105 WEST CAPITOL
JEFFERSON CITY, MO 65102
1-888-ASK-MODOT (1-888-275-6636)

HORNER SHIFRIN
401 S. 18TH ST., STE. 400 ST. LOUIS, MO 63103
314.241.1976 FAX 314.241.1988
WWW.HORNERSHIFRIN.COM
DISCIPLINE: PROFESSIONAL ENGINEERING
CERTIFICATE OF AUTHORITY: 000159
EXPIRATION DATE: DECEMBER 31, 2026

DISCLAIMER

THE PROFESSIONAL WHOSE SIGNATURE AND PERSONAL SEAL APPEAR HEREON ASSUMES RESPONSIBILITY ONLY FOR WHAT APPEARS ON THIS PAGE, AND DISCLAIMS (PURSUANT TO SECTION 327.411 RSMO) SPECIFICATION, ESTIMATES, REPORTS, OR OTHER DOCUMENTS OR INSTRUMENTS NOT SEALED BY THE UNDERSIGNED PROFESSIONAL RELATING TO OR INTENDED TO BE USED FOR ANY PART OR PARTS OF THE PROJECT TO WHICH THIS PAGE REFERS.

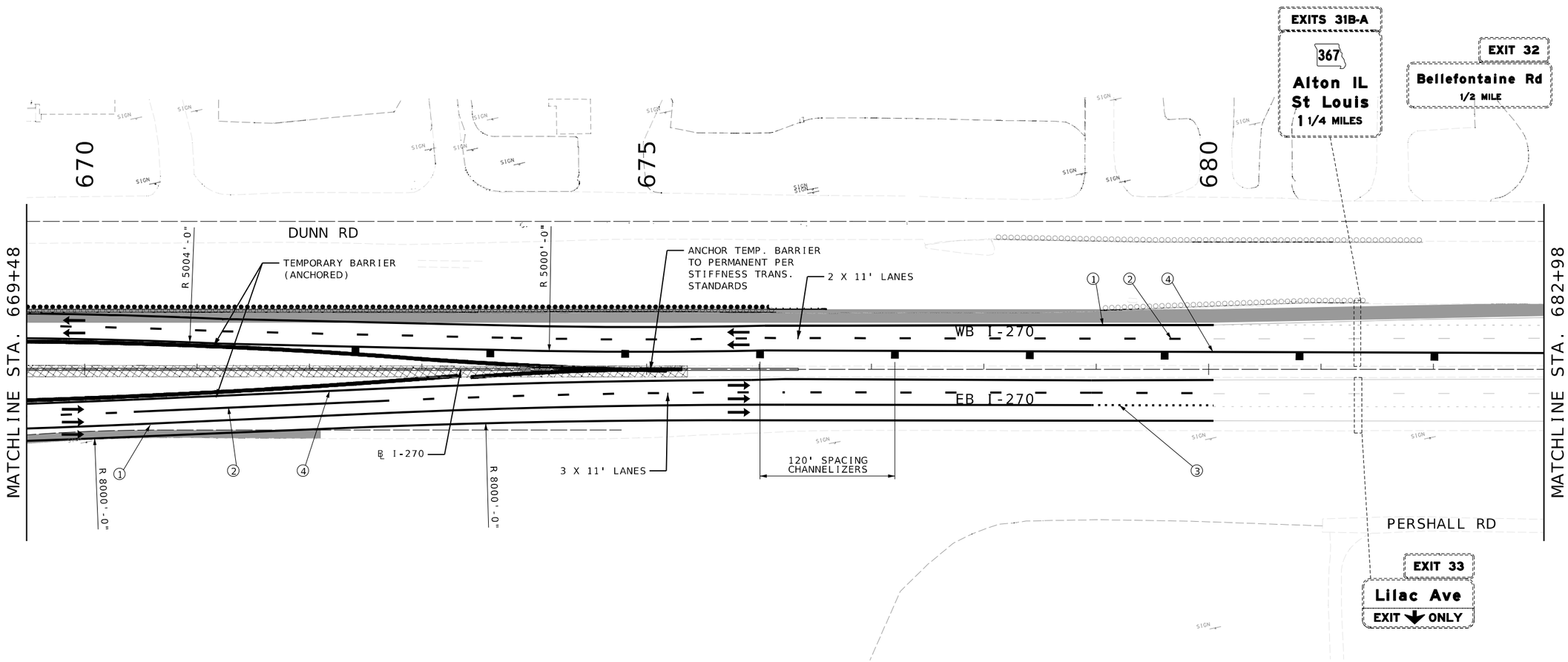

MAINTENANCE OF TRAFFIC LEGEND

- COMPLETED CONSTRUCTION
- WORK ZONE
- TEMPORARY PAVEMENT
- TEMPORARY PAVEMENT PLACED IN PREVIOUS STAGE
- TEMPORARY PAVEMENT TO BE REMOVED IN CURRENT STAGE
- TRAFFIC FLOW
- TEMPORARY LONG-TERM RUMBLE STRIP
- TYPE III MOVEABLE BARRICADE
- DIRECTONAL INDICATOR BARRICADE
- CHANNELIZER
- SIGN (SINGLE SIDED)
- CHANGEABLE MESSAGE SIGN
- FLASHING ARROW PANEL

STRIPING NOTES

1. 4-INCH TEMPORARY PAVEMENT MARKING PAINT, WHITE, SOLID
2. 4-INCH TEMPORARY PAVEMENT MARKING PAINT, WHITE, 10' DASH 30' SKIP
3. 4-INCH TEMPORARY PAVEMENT MARKING PAINT, WHITE, DOTTED
4. 4-INCH TEMPORARY PAVEMENT MARKING PAINT, YELLOW, SOLID

SCALE

0 50 100 150

TRAFFIC CONTROL PLAN
PHASE 1B
SHEET 8 OF 10

STATE OF MISSOURI
JONATHAN R. LOOS
NUMBER PE-2017000326
PROFESSIONAL ENGINEER

DATE PREPARED	3/26/2026
ROUTE	I-270
STATE	MO
DISTRICT	STL
SHEET NO.	57
COUNTY	ST. LOUIS
JOB NO.	JSL0021
CONTRACT ID.	.
PROJECT NO.	.
BRIDGE NO.	.

DATE	DESCRIPTION
.	.

IF A SEAL IS PRESENT ON THIS SHEET IT HAS BEEN ELECTRONICALLY SEALED AND DATED.

MISSOURI HIGHWAYS AND TRANSPORTATION COMMISSION

MoDOT

105 WEST CAPITOL
JEFFERSON CITY, MO 65102
1-888-ASK-MODOT (1-888-275-6636)

HORNER SHIFRIN

401 S. 18TH ST., STE. 400 ST. LOUIS, MO 63103
314-531-4321 - FAX 314-531-6966
WWW.HORNERSHIFRIN.COM
DISCIPLINE: PROFESSIONAL ENGINEERING
CERTIFICATE OF AUTHORITY: 000159
EXPIRATION DATE: DECEMBER 31, 2026

...\H&S\SL0021 MOT\Phase 1B Sheets 2:41:42 PM 3/26/2026

DISCLAIMER

THE PROFESSIONAL WHOSE SIGNATURE AND PERSONAL SEAL APPEAR HEREON ASSUMES RESPONSIBILITY ONLY FOR WHAT APPEARS ON THIS PAGE, AND DISCLAIMS (PURSUANT TO SECTION 327.411 RSMO) SPECIFICATION, ESTIMATES, REPORTS, OR OTHER DOCUMENTS OR INSTRUMENTS NOT SEALED BY THE UNDERSIGNED PROFESSIONAL RELATING TO OR INTENDED TO BE USED FOR ANY PART OR PARTS OF THE PROJECT TO WHICH THIS PAGE REFERS.

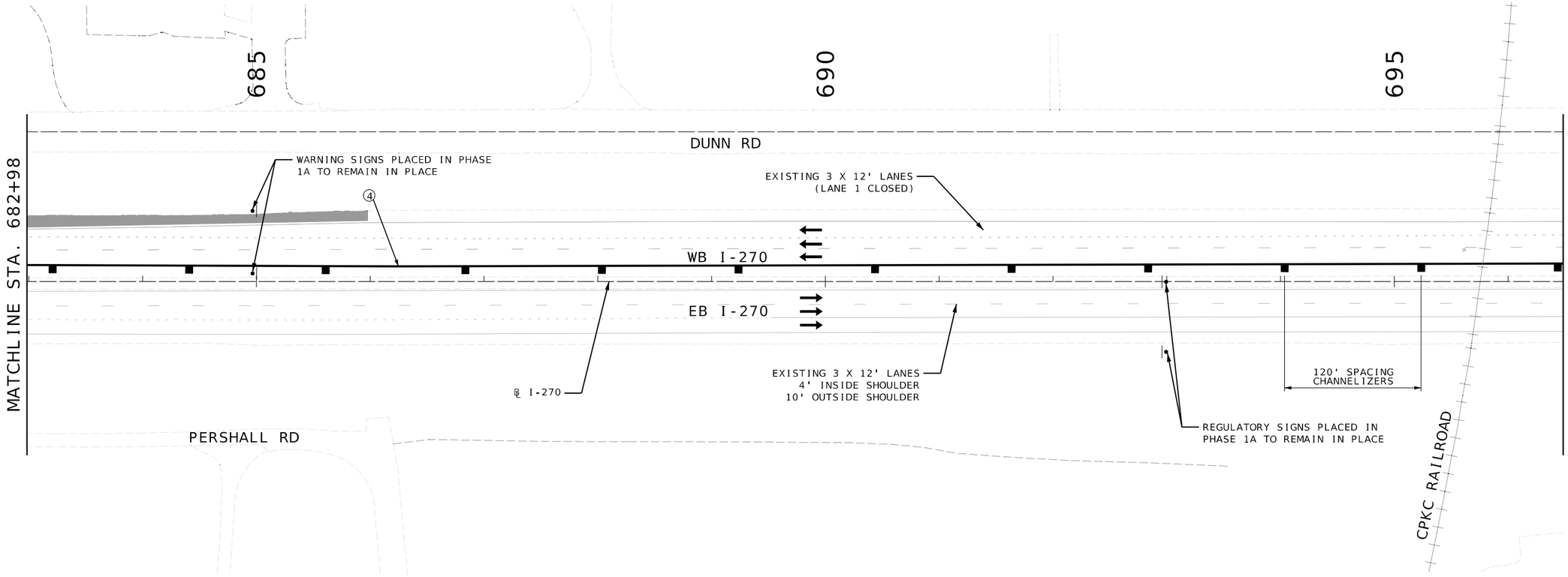

MAINTENANCE OF TRAFFIC LEGEND

- COMPLETED CONSTRUCTION
- WORK ZONE
- TEMPORARY PAVEMENT
- TEMPORARY PAVEMENT PLACED IN PREVIOUS STAGE
- TEMPORARY PAVEMENT TO BE REMOVED IN CURRENT STAGE
- TRAFFIC FLOW
- TEMPORARY LONG-TERM RUMBLE STRIP
- TYPE III MOVEABLE BARRICADE
- DIRECTONAL INDICATOR BARRICADE
- CHANNELIZER
- SIGN (SINGLE SIDED)
- CHANGEABLE MESSAGE SIGN
- FLASHING ARROW PANEL

STRIPING NOTES

1. 4-INCH TEMPORARY PAVEMENT MARKING PAINT, WHITE, SOLID
2. 4-INCH TEMPORARY PAVEMENT MARKING PAINT, WHITE, 10' DASH 30' SKIP
3. 4-INCH TEMPORARY PAVEMENT MARKING PAINT, WHITE, DOTTED
4. 4-INCH TEMPORARY PAVEMENT MARKING PAINT, YELLOW, SOLID

SCALE

0 50 100 150

TRAFFIC CONTROL PLAN
PHASE 1B
SHEET 9 OF 10

STATE OF MISSOURI
JONATHAN R. LOOS
NUMBER PE-2017000326
PROFESSIONAL ENGINEER

DATE PREPARED	
3/20/2026	
ROUTE I-270	STATE MO
DISTRICT STL	SHEET NO. 58
COUNTY ST. LOUIS	
JOB NO. JSL0021	
CONTRACT ID. .	
PROJECT NO. .	
BRIDGE NO. .	

DATE	DESCRIPTION
.	.

IF A SEAL IS PRESENT ON THIS SHEET IT HAS BEEN ELECTRONICALLY SEALED AND DATED.

MISSOURI HIGHWAYS AND TRANSPORTATION COMMISSION

MoDOT

105 WEST CAPITOL
JEFFERSON CITY, MO 65102
1-888-ASK-MODOT (1-888-275-6636)

HORNER SHIFRIN

401 S. 18TH ST., STE. 400 ST. LOUIS, MO 63103
314-531-4321 - FAX 314-531-6966
WWW.HORNERSHIFRIN.COM
DISCIPLINE: PROFESSIONAL ENGINEERING
CERTIFICATE OF AUTHORITY: 000159
EXPIRATION DATE: DECEMBER 31, 2026

...\H&S\SL0021 MOT\Phase 1B Sheets 12:14:59 PM 3/20/2026

DISCLAIMER

THE PROFESSIONAL WHOSE SIGNATURE AND PERSONAL SEAL APPEAR HEREON ASSUMES RESPONSIBILITY ONLY FOR WHAT APPEARS ON THIS PAGE, AND DISCLAIMS (PURSUANT TO SECTION 327.411 RSMO) SPECIFICATION, ESTIMATES, REPORTS, OR OTHER DOCUMENTS OR INSTRUMENTS NOT SEALED BY THE UNDERSIGNED PROFESSIONAL RELATING TO OR INTENDED TO BE USED FOR ANY PART OR PARTS OF THE PROJECT TO WHICH THIS PAGE REFERS.

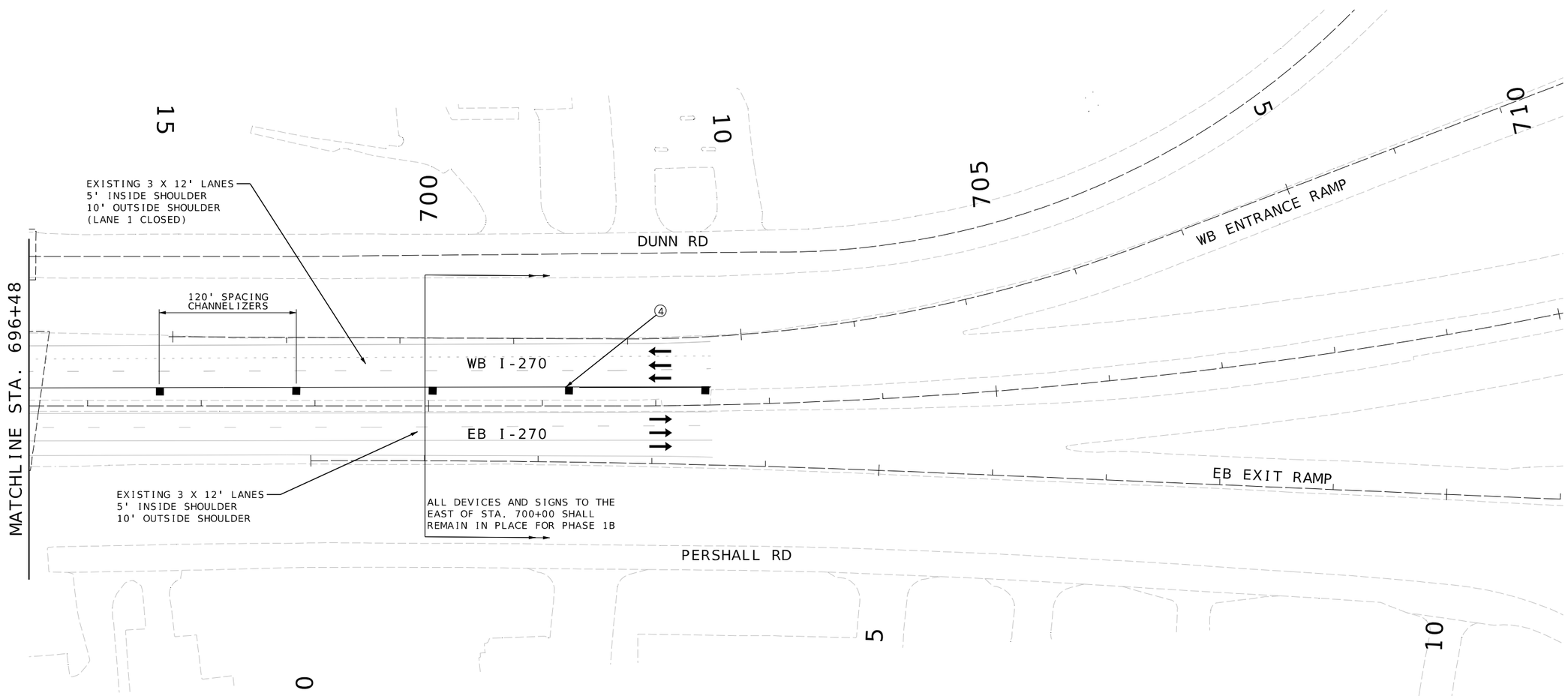

MAINTENANCE OF TRAFFIC LEGEND

- COMPLETED CONSTRUCTION
- WORK ZONE
- TEMPORARY PAVEMENT
- TEMPORARY PAVEMENT PLACED IN PREVIOUS STAGE
- TEMPORARY PAVEMENT TO BE REMOVED IN CURRENT STAGE
- TRAFFIC FLOW
- TEMPORARY LONG-TERM RUMBLE STRIP
- TYPE III MOVEABLE BARRICADE
- DIRECTONAL INDICATOR BARRICADE
- CHANNELIZER
- SIGN (SINGLE SIDED)
- CHANGEABLE MESSAGE SIGN
- FLASHING ARROW PANEL

STRIPING NOTES

1. 4-INCH TEMPORARY PAVEMENT MARKING PAINT, WHITE, SOLID
2. 4-INCH TEMPORARY PAVEMENT MARKING PAINT, WHITE, 10' DASH 30' SKIP
3. 4-INCH TEMPORARY PAVEMENT MARKING PAINT, WHITE, DOTTED
4. 4-INCH TEMPORARY PAVEMENT MARKING PAINT, YELLOW, SOLID

SCALE

0 50 100 150

TRAFFIC CONTROL PLAN
PHASE 1B
SHEET 10 OF 10

STATE OF MISSOURI
JONATHAN R. LODS
NUMBER PE-2017000326
PROFESSIONAL ENGINEER

DATE PREPARED	3/20/2026
ROUTE	I-270
STATE	MO
DISTRICT	STL
SHEET NO.	59
COUNTY	ST. LOUIS
JOB NO.	JSL0021
CONTRACT ID.	.
PROJECT NO.	.
BRIDGE NO.	.

DATE	DESCRIPTION
.	.

MISSOURI HIGHWAYS AND TRANSPORTATION COMMISSION

MoDOT

105 WEST CAPITOL
JEFFERSON CITY, MO 65102
1-888-ASK-MODOT (1-888-275-6636)

HORNER SHIFRIN

401 S. 18TH ST., STE. 400 ST. LOUIS, MO 63103
314-531-4321 - FAX 314-531-6966
WWW.HORNERSHIFRIN.COM
DISCIPLINE: PROFESSIONAL ENGINEERING
CERTIFICATE OF AUTHORITY: 000159
EXPIRATION DATE: DECEMBER 31, 2026

IF A SEAL IS PRESENT ON THIS SHEET IT HAS BEEN ELECTRONICALLY SEALED AND DATED.

REV.

...\H&S\SL0021 MOT\Phase 1B Sheets 12:15:00 PM 3/20/2026

GENERAL TRAFFIC CONTROL NOTES:

1. ANY EXISTING GROUND-MOUNTED SIGN THAT CONFLICTS WITH THE TRAFFIC CONTROL SIGNING SHALL BE COMPLETELY COVERED OR REMOVED AT NO DIRECT PAY. COVERING OF EXISTING OVERHEAD SIGNS SHALL BE AS NOTED IN THE PLANS AND PAID AS EACH UNDER BID ITEM "COVER EXISTING OVERHEAD SIGN".

2. PLACEMENT OF TRAFFIC CONTROL SIGNS ARE APPROXIMATE AND MAY BE ADJUSTED TO FIT FIELD CONDITIONS AS APPROVED BY THE ENGINEER.

3. SIGN AND DEVICE LOCATIONS SHALL BE FIELD VERIFIED AND APPROVED BY THE ENGINEER.

4. NO DIRECT PAY WILL BE MADE FOR THE RELOCATION OR TEMPORARY MOUNTING OF EXISTING SIGNS DISPLACED BY THE TEMPORARY WIDENING. METHOD OF TEMPORARY MOUNTING AND LOCATION OF THESE SIGNS TO BE APPROVED BY THE ENGINEER.



DISCLAIMER

THE PROFESSIONAL WHOSE SIGNATURE AND PERSONAL SEAL APPEAR HEREON ASSUMES RESPONSIBILITY ONLY FOR WHAT APPEARS ON THIS PAGE, AND DISCLAIMS (PURSUANT TO SECTION 327.411 RSMO) SPECIFICATION, ESTIMATES, REPORTS, OR OTHER DOCUMENTS OR INSTRUMENTS NOT SEALED BY THE UNDERSIGNED PROFESSIONAL RELATING TO OR INTENDED TO BE USED FOR ANY PART OR PARTS OF THE PROJECT TO WHICH THIS PAGE REFERS.

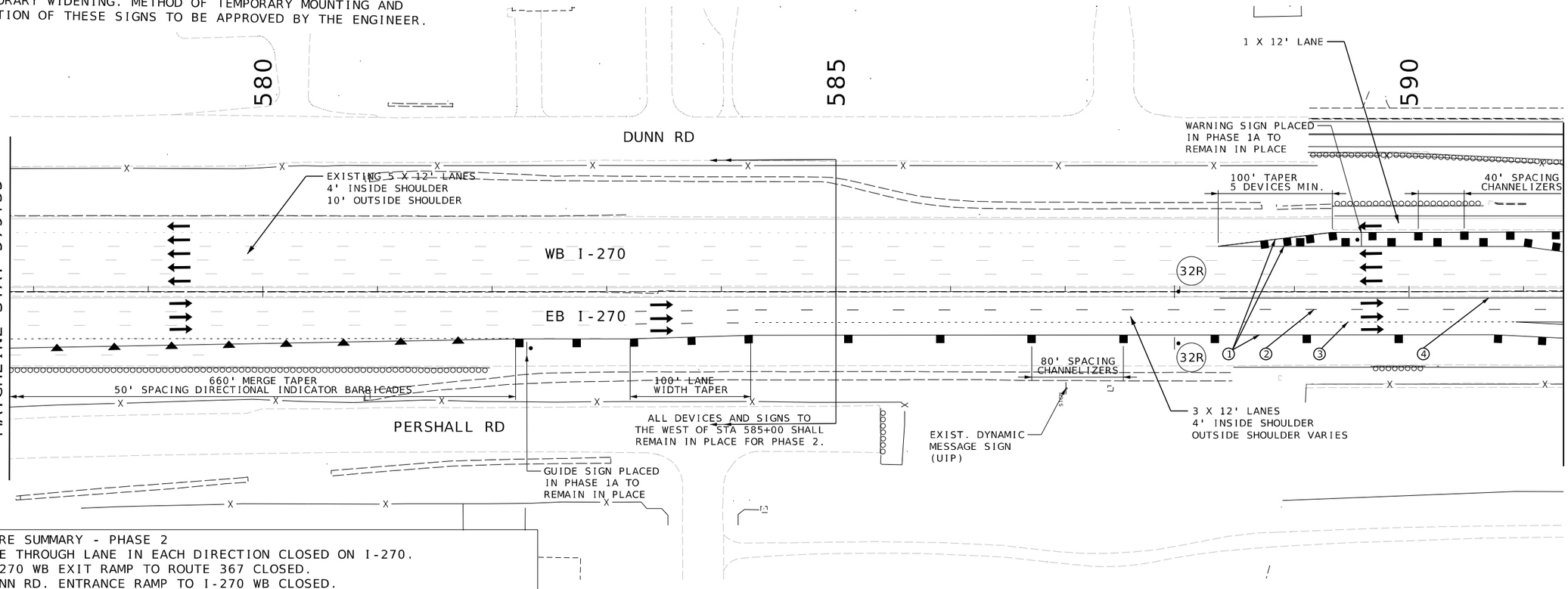

CLOSURE SUMMARY - PHASE 2
1. ONE THROUGH LANE IN EACH DIRECTION CLOSED ON I-270.
2. I-270 WB EXIT RAMP TO ROUTE 367 CLOSED.
3. DUNN RD. ENTRANCE RAMP TO I-270 WB CLOSED.
4. I-270 WB EXIT RAMP TO DUNN RD. CLOSED.

MOT PHASE 2
1. CROSSOVER 2 LANES OF I-270 WB TRAFFIC TO SOUTH ONTO EB PAVEMENT.
2. CONSTRUCT WB I-270 BRIDGE AND PAVEMENT AS SHOWN ON THE PLANS.

MAINTENANCE OF TRAFFIC LEGEND

- COMPLETED CONSTRUCTION
- WORK ZONE
- TEMPORARY PAVEMENT
- TEMPORARY PAVEMENT PLACED IN PREVIOUS STAGE
- TEMPORARY PAVEMENT TO BE REMOVED IN CURRENT STAGE
- TRAFFIC FLOW
- TEMPORARY LONG-TERM RUMBLE STRIP
- TYPE III MOVEABLE BARRICADE
- DIRECTONAL INDICATOR BARRICADE
- CHANNELIZER
- SIGN (SINGLE SIDED)
- CHANGEABLE MESSAGE SIGN
- FLASHING ARROW PANEL

STRIPING NOTES

1. 4-INCH TEMPORARY PAVEMENT MARKING PAINT, WHITE, SOLID
2. 4-INCH TEMPORARY PAVEMENT MARKING PAINT, WHITE, 10' DASH 30' SKIP
3. 4-INCH TEMPORARY PAVEMENT MARKING PAINT, WHITE, DOTTED
4. 4-INCH TEMPORARY PAVEMENT MARKING PAINT, YELLOW, SOLID

SCALE
0 50 100 150

TRAFFIC CONTROL PLAN
PHASE 2
SHEET 1 OF 10

STATE OF MISSOURI
JONATHAN R. LODS
NUMBER PE-2017000326
PROFESSIONAL ENGINEER

DATE PREPARED 3/20/2026
ROUTE I-270 | STATE MO
DISTRICT STL | SHEET NO. 60
COUNTY ST. LOUIS
JOB NO. JSL0021
CONTRACT ID. .
PROJECT NO. .
BRIDGE NO. .

DESCRIPTION | DATE | REV.

IF A SEAL IS PRESENT ON THIS SHEET IT HAS BEEN ELECTRONICALLY SEALED AND DATED.

MISSOURI HIGHWAYS AND TRANSPORTATION COMMISSION
105 WEST CAPITOL
JEFFERSON CITY, MO 65102
1-888-ASK-MODOT (1-888-275-6636)

HORNER SHIFRIN
401 S. 18TH ST., STE. 400 ST. LOUIS, MO 63103
314-241-1976 FAX 314-241-1988
WWW.HORNERSHIFRIN.COM
DISCIPLINE: PROFESSIONAL ENGINEERING
CERTIFICATE OF AUTHORITY: 000159
EXPIRATION DATE: DECEMBER 31, 2026

...\H&S\SL0021 MOT\Phase 2 Sheets 12:15:13 PM 3/20/2026

DISCLAIMER

THE PROFESSIONAL WHOSE SIGNATURE AND PERSONAL SEAL APPEAR HEREON ASSUMES RESPONSIBILITY ONLY FOR WHAT APPEARS ON THIS PAGE, AND DISCLAIMS (PURSUANT TO SECTION 327.411 RSMO) SPECIFICATION, ESTIMATES, REPORTS, OR OTHER DOCUMENTS OR INSTRUMENTS NOT SEALED BY THE UNDERSIGNED PROFESSIONAL RELATING TO OR INTENDED TO BE USED FOR ANY PART OR PARTS OF THE PROJECT TO WHICH THIS PAGE REFERS.

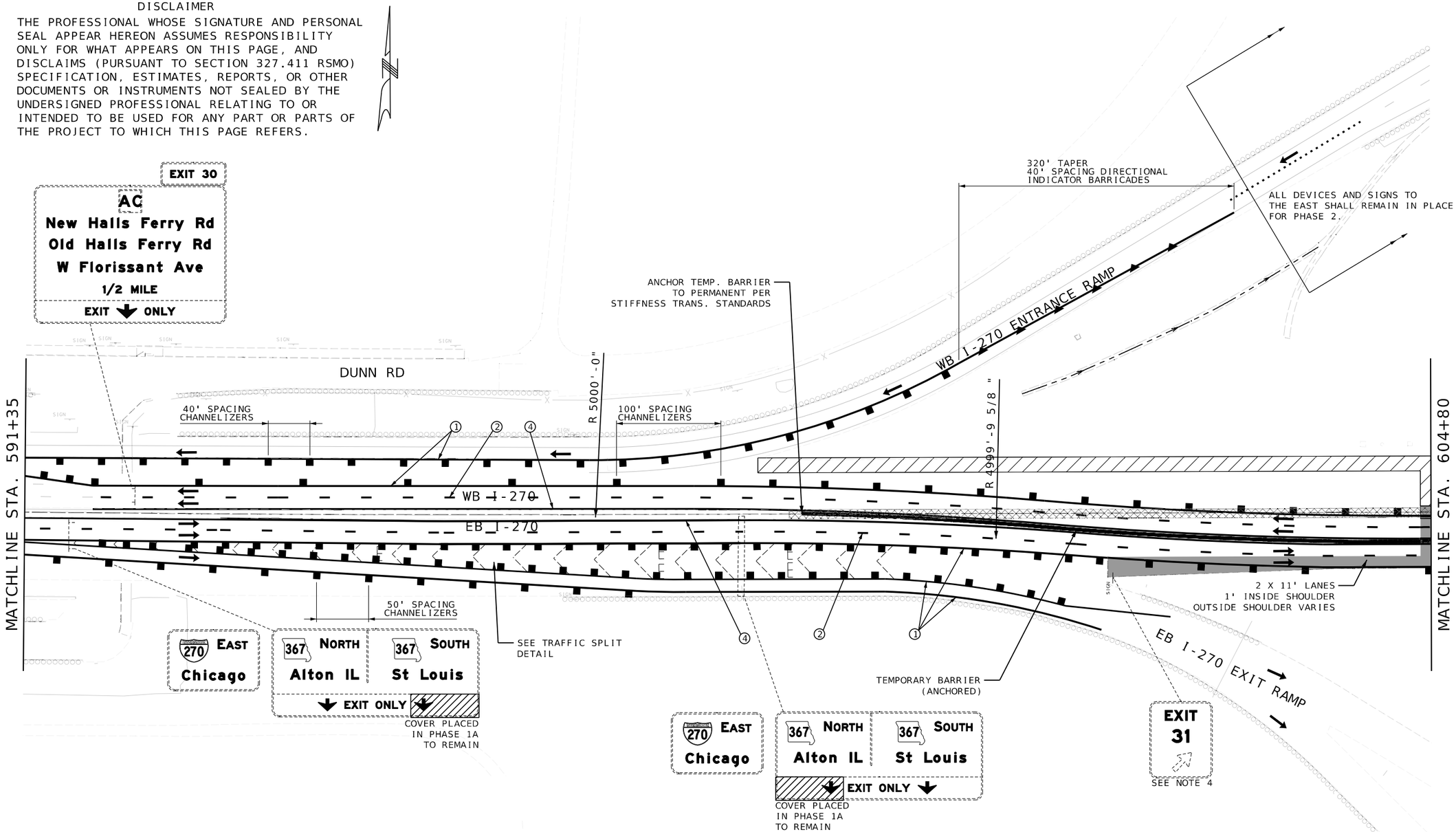

MAINTENANCE OF TRAFFIC LEGEND

- COMPLETED CONSTRUCTION
- WORK ZONE
- TEMPORARY PAVEMENT
- TEMPORARY PAVEMENT PLACED IN PREVIOUS STAGE
- TEMPORARY PAVEMENT TO BE REMOVED IN CURRENT STAGE
- TRAFFIC FLOW
- TEMPORARY LONG-TERM RUMBLE STRIP
- TYPE III MOVEABLE BARRICADE
- DIRECTONAL INDICATOR BARRICADE
- CHANNELIZER
- SIGN (SINGLE SIDED)
- CHANGEABLE MESSAGE SIGN
- FLASHING ARROW PANEL

STRIPING NOTES

1. 4-INCH TEMPORARY PAVEMENT MARKING PAINT, WHITE, SOLID
2. 4-INCH TEMPORARY PAVEMENT MARKING PAINT, WHITE, 10' DASH 30' SKIP
3. 4-INCH TEMPORARY PAVEMENT MARKING PAINT, WHITE, DOTTED
4. 4-INCH TEMPORARY PAVEMENT MARKING PAINT, YELLOW, SOLID

SCALE

0 50 100 150

TRAFFIC CONTROL PLAN
PHASE 2
SHEET 2 OF 10

STATE OF MISSOURI
JONATHAN R. LOOS
NUMBER PE-2017000326
PROFESSIONAL ENGINEER

DATE PREPARED	3/20/2026
ROUTE	I-270
STATE	MO
DISTRICT	STL
SHEET NO.	61
COUNTY	ST. LOUIS
JOB NO.	JSL0021
CONTRACT ID.	.
PROJECT NO.	.
BRIDGE NO.	.

DESCRIPTION

DATE

IF A SEAL IS PRESENT ON THIS SHEET IT HAS BEEN ELECTRONICALLY SEALED AND DATED.

MISSOURI HIGHWAYS AND TRANSPORTATION COMMISSION

MoDOT

105 WEST CAPITOL
JEFFERSON CITY, MO 65102
1-888-ASK-MODOT (1-888-275-6636)

HORNER SHIFRIN

401 S. 18TH ST., STE. 400 ST. LOUIS, MO 63103
314-531-4321 - FAX 314-531-6966
WWW.HORNERSHIFRIN.COM
DISCIPLINE: PROFESSIONAL ENGINEERING
CERTIFICATE OF AUTHORITY: 000159
EXPIRATION DATE: DECEMBER 31, 2026

...\H&S\SL0021 MOT\Phase 2 Sheets 12:15:13 PM 3/20/2026

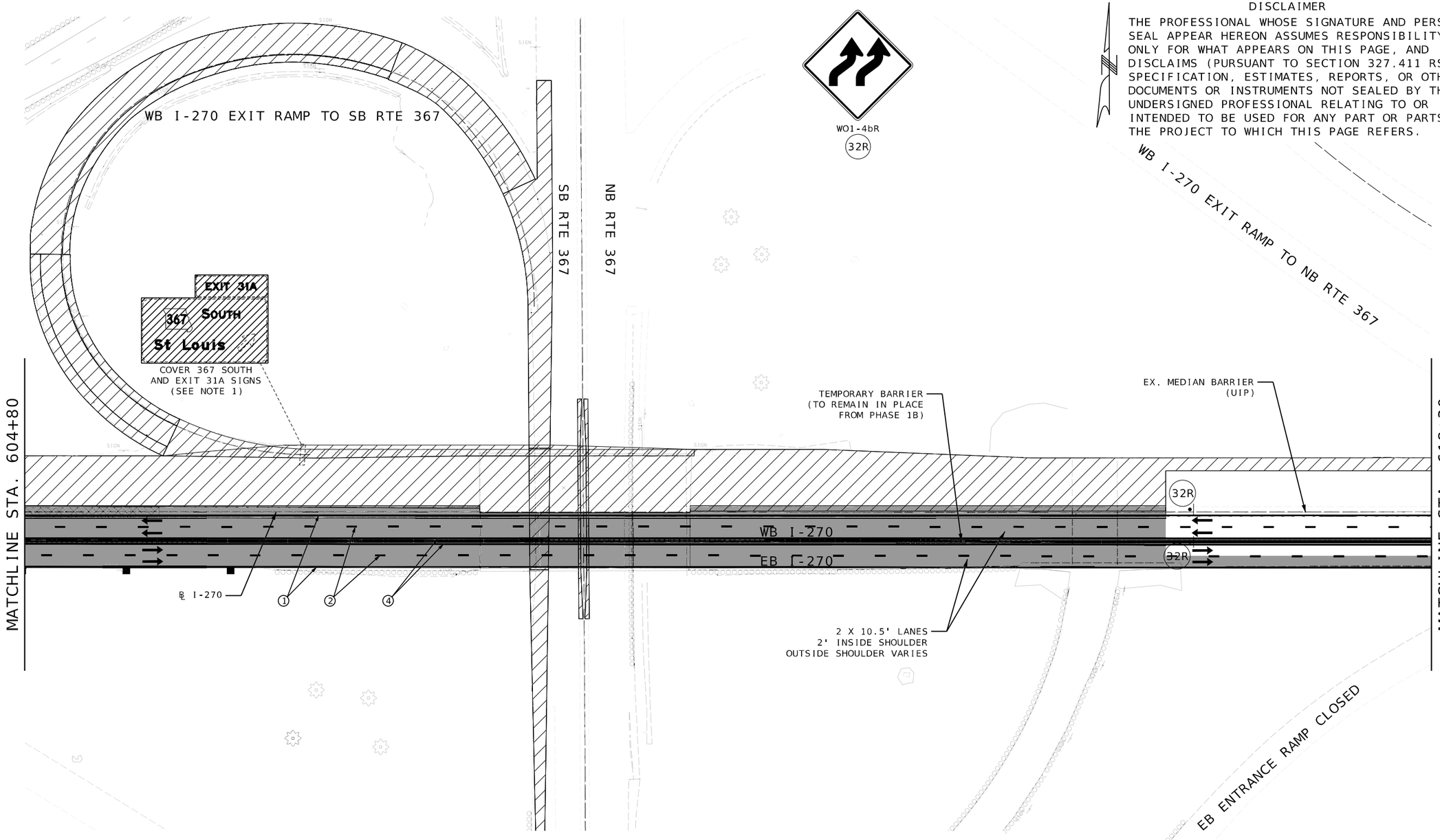

DISCLAIMER

THE PROFESSIONAL WHOSE SIGNATURE AND PERSONAL SEAL APPEAR HEREON ASSUMES RESPONSIBILITY ONLY FOR WHAT APPEARS ON THIS PAGE, AND DISCLAIMS (PURSUANT TO SECTION 327.411 RSMO) SPECIFICATION, ESTIMATES, REPORTS, OR OTHER DOCUMENTS OR INSTRUMENTS NOT SEALED BY THE UNDERSIGNED PROFESSIONAL RELATING TO OR INTENDED TO BE USED FOR ANY PART OR PARTS OF THE PROJECT TO WHICH THIS PAGE REFERS.

MAINTENANCE OF TRAFFIC LEGEND

- COMPLETED CONSTRUCTION
- WORK ZONE
- TEMPORARY PAVEMENT
- TEMPORARY PAVEMENT PLACED IN PREVIOUS STAGE
- TEMPORARY PAVEMENT TO BE REMOVED IN CURRENT STAGE
- TRAFFIC FLOW
- TEMPORARY LONG-TERM RUMBLE STRIP
- TYPE III MOVEABLE BARRICADE
- DIRECTONAL INDICATOR BARRICADE
- CHANNELIZER
- SIGN (SINGLE SIDED)
- CHANGEABLE MESSAGE SIGN
- FLASHING ARROW PANEL

STRIPING NOTES

1. 4-INCH TEMPORARY PAVEMENT MARKING PAINT, WHITE, SOLID
2. 4-INCH TEMPORARY PAVEMENT MARKING PAINT, WHITE, 10' DASH 30' SKIP
3. 4-INCH TEMPORARY PAVEMENT MARKING PAINT, WHITE, DOTTED
4. 4-INCH TEMPORARY PAVEMENT MARKING PAINT, YELLOW, SOLID

SCALE
0 50 100 150

TRAFFIC CONTROL PLAN
PHASE 2
SHEET 3 OF 10

STATE OF MISSOURI
JONATHAN R. LOOS
NUMBER PE-2017000326
PROFESSIONAL ENGINEER

DATE PREPARED	3/20/2026
ROUTE	I-270
STATE	MO
DISTRICT	STL
SHEET NO.	62
COUNTY	ST. LOUIS
JOB NO.	JSL0021
CONTRACT ID.	.
PROJECT NO.	.
BRIDGE NO.	.

DATE	DESCRIPTION
.	.

IF A SEAL IS PRESENT ON THIS SHEET IT HAS BEEN ELECTRONICALLY SEALED AND DATED.

MISSOURI HIGHWAYS AND TRANSPORTATION COMMISSION
MoDOT
105 WEST CAPITOL
JEFFERSON CITY, MO 65102
1-888-ASK-MODOT (1-888-275-6636)

HORNER SHIFRIN
401 S. 18TH ST., STE. 400 ST. LOUIS, MO 63103
314-531-4321 - FAX 314-531-6966
WWW.HORNERSHIFRIN.COM
DISCIPLINE: PROFESSIONAL ENGINEERING
CERTIFICATE OF AUTHORITY: 000159
EXPIRATION DATE: DECEMBER 31, 2026

...\H&S\SL0021 MOT\Phase 2 Sheets 12:15:14 PM 3/20/2026

DISCLAIMER

THE PROFESSIONAL WHOSE SIGNATURE AND PERSONAL SEAL APPEAR HEREON ASSUMES RESPONSIBILITY ONLY FOR WHAT APPEARS ON THIS PAGE, AND DISCLAIMS (PURSUANT TO SECTION 327.411 RSMO) SPECIFICATION, ESTIMATES, REPORTS, OR OTHER DOCUMENTS OR INSTRUMENTS NOT SEALED BY THE UNDERSIGNED PROFESSIONAL RELATING TO OR INTENDED TO BE USED FOR ANY PART OR PARTS OF THE PROJECT TO WHICH THIS PAGE REFERS.

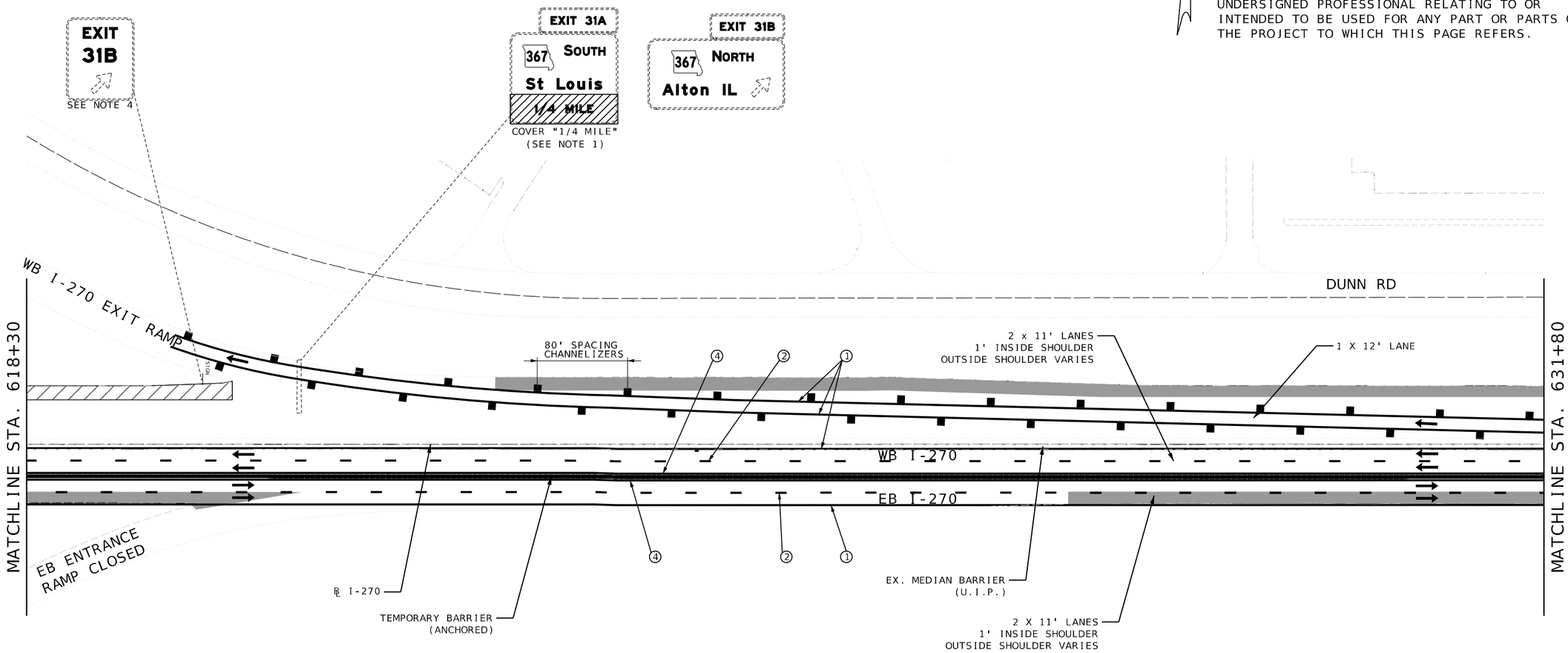

MAINTENANCE OF TRAFFIC LEGEND

- COMPLETED CONSTRUCTION
- WORK ZONE
- TEMPORARY PAVEMENT
- TEMPORARY PAVEMENT PLACED IN PREVIOUS STAGE
- TEMPORARY PAVEMENT TO BE REMOVED IN CURRENT STAGE
- TRAFFIC FLOW
- TEMPORARY LONG-TERM RUMBLE STRIP
- TYPE III MOVEABLE BARRICADE
- DIRECTONAL INDICATOR BARRICADE
- CHANNELIZER
- SIGN (SINGLE SIDED)
- CHANGEABLE MESSAGE SIGN
- FLASHING ARROW PANEL

STRIPING NOTES

1. 4-INCH TEMPORARY PAVEMENT MARKING PAINT, WHITE, SOLID
2. 4-INCH TEMPORARY PAVEMENT MARKING PAINT, WHITE, 10' DASH 30' SKIP
3. 4-INCH TEMPORARY PAVEMENT MARKING PAINT, WHITE, DOTTED
4. 4-INCH TEMPORARY PAVEMENT MARKING PAINT, YELLOW, SOLID

SCALE
0 50 100 150

TRAFFIC CONTROL PLAN PHASE 2 SHEET 4 OF 10

STATE OF MISSOURI ★ JONATHAN R. LODS NUMBER PE-2017000326 ★ PROFESSIONAL ENGINEER

DATE PREPARED 3/20/2026

ROUTE	STATE
I-270	MO
DISTRICT	SHEET NO.
STL	63

COUNTY: ST. LOUIS
JOB NO.: JSL0021
CONTRACT ID.:
PROJECT NO.:
BRIDGE NO.:

DESCRIPTION	DATE

IF A SEAL IS PRESENT ON THIS SHEET IT HAS BEEN ELECTRONICALLY SEALED AND DATED.

MISSOURI HIGHWAYS AND TRANSPORTATION COMMISSION
105 WEST CAPITOL
JEFFERSON CITY, MO 65102
1-888-ASK-MODOT (1-888-275-6636)

HORNER SHIFRIN
401 S. 18TH ST., STE. 400 ST. LOUIS, MO 63103
314.241.1976 FAX 314.241.1988
WWW.HORNERSHIFRIN.COM
DISCIPLINE: PROFESSIONAL ENGINEERING
CERTIFICATE OF AUTHORITY: 000159
EXPIRATION DATE: DECEMBER 31, 2026

...\H&S\SL0021 MOT\Phase 2 Sheets 12:15:15 PM 3/20/2026

DISCLAIMER

THE PROFESSIONAL WHOSE SIGNATURE AND PERSONAL SEAL APPEAR HEREON ASSUMES RESPONSIBILITY ONLY FOR WHAT APPEARS ON THIS PAGE, AND DISCLAIMS (PURSUANT TO SECTION 327.411 RSMO) SPECIFICATION, ESTIMATES, REPORTS, OR OTHER DOCUMENTS OR INSTRUMENTS NOT SEALED BY THE UNDERSIGNED PROFESSIONAL RELATING TO OR INTENDED TO BE USED FOR ANY PART OR PARTS OF THE PROJECT TO WHICH THIS PAGE REFERS.

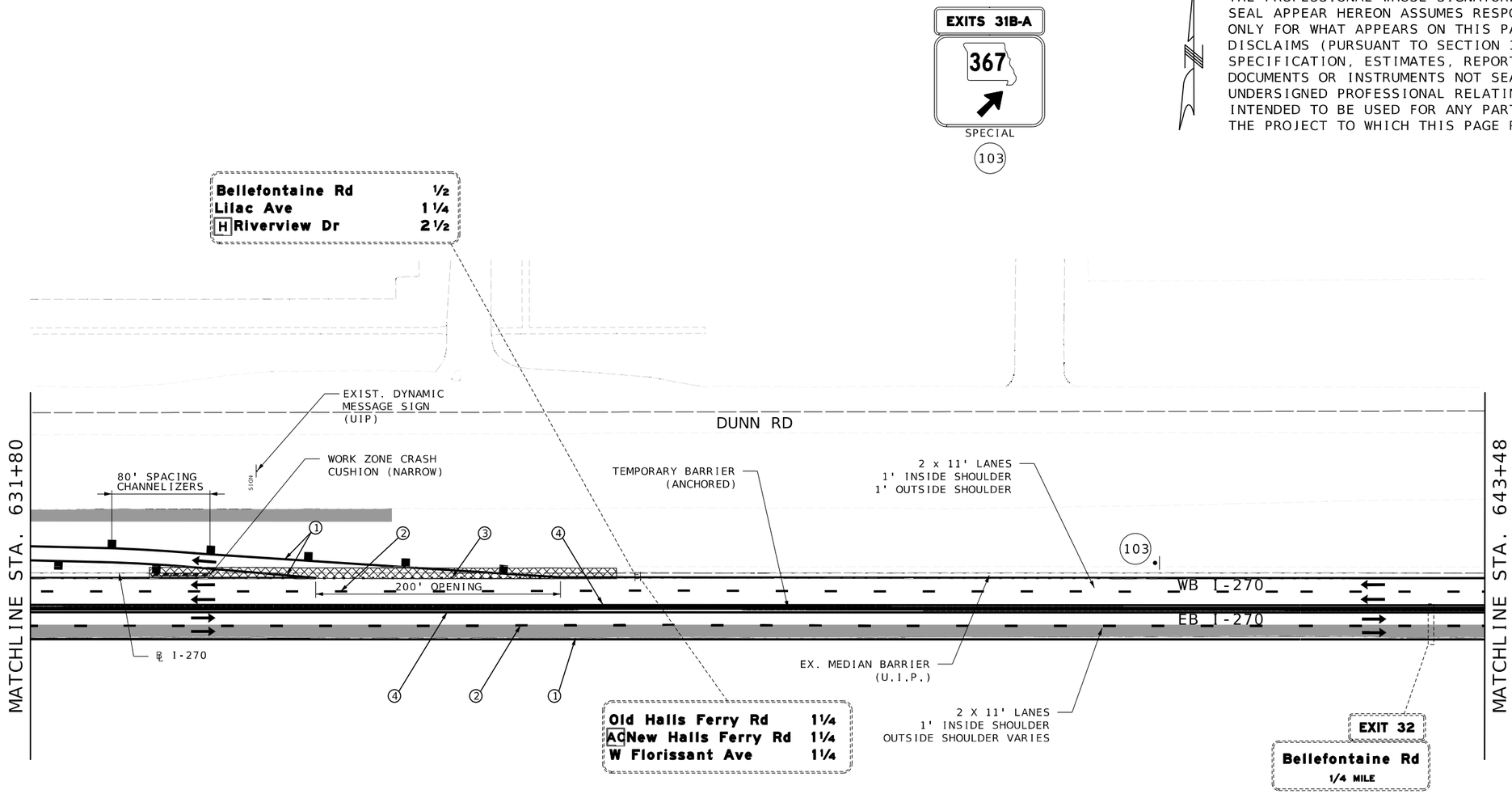

MAINTENANCE OF TRAFFIC LEGEND

- COMPLETED CONSTRUCTION
- WORK ZONE
- TEMPORARY PAVEMENT
- TEMPORARY PAVEMENT PLACED IN PREVIOUS STAGE
- TEMPORARY PAVEMENT TO BE REMOVED IN CURRENT STAGE
- TRAFFIC FLOW
- TEMPORARY LONG-TERM RUMBLE STRIP
- TYPE III MOVEABLE BARRICADE
- DIRECTONAL INDICATOR BARRICADE
- CHANNELIZER
- SIGN (SINGLE SIDED)
- CHANGEABLE MESSAGE SIGN
- FLASHING ARROW PANEL

STRIPING NOTES

1. 4-INCH TEMPORARY PAVEMENT MARKING PAINT, WHITE, SOLID
2. 4-INCH TEMPORARY PAVEMENT MARKING PAINT, WHITE, 10' DASH 30' SKIP
3. 4-INCH TEMPORARY PAVEMENT MARKING PAINT, WHITE, DOTTED
4. 4-INCH TEMPORARY PAVEMENT MARKING PAINT, YELLOW, SOLID

SCALE
0 50 100 150

TRAFFIC CONTROL PLAN
PHASE 2
SHEET 5 OF 10

STATE OF MISSOURI
JONATHAN R. LODS
NUMBER PE-2017000326
PROFESSIONAL ENGINEER

DATE PREPARED 3/20/2026
ROUTE I-270 | STATE MO
DISTRICT STL | SHEET NO. 64
COUNTY ST. LOUIS
JOB NO. JSL0021
CONTRACT ID. .
PROJECT NO. .
BRIDGE NO. .

DESCRIPTION	DATE

IF A SEAL IS PRESENT ON THIS SHEET IT HAS BEEN ELECTRONICALLY SEALED AND DATED.

MISSOURI HIGHWAYS AND TRANSPORTATION COMMISSION
105 WEST CAPITOL
JEFFERSON CITY, MO 65102
1-888-ASK-MODOT (1-888-275-6636)

HORNER SHIFRIN
401 S. 18TH ST., STE. 400 ST. LOUIS, MO 63103
314.241.1976 FAX 314.241.1988
WWW.HORNERSHIFRIN.COM
DISCIPLINE: PROFESSIONAL ENGINEERING
CERTIFICATE OF AUTHORITY: 000159
EXPIRATION DATE: DECEMBER 31, 2026

DISCLAIMER

THE PROFESSIONAL WHOSE SIGNATURE AND PERSONAL SEAL APPEAR HEREON ASSUMES RESPONSIBILITY ONLY FOR WHAT APPEARS ON THIS PAGE, AND DISCLAIMS (PURSUANT TO SECTION 327.411 RSMO) SPECIFICATION, ESTIMATES, REPORTS, OR OTHER DOCUMENTS OR INSTRUMENTS NOT SEALED BY THE UNDERSIGNED PROFESSIONAL RELATING TO OR INTENDED TO BE USED FOR ANY PART OR PARTS OF THE PROJECT TO WHICH THIS PAGE REFERS.

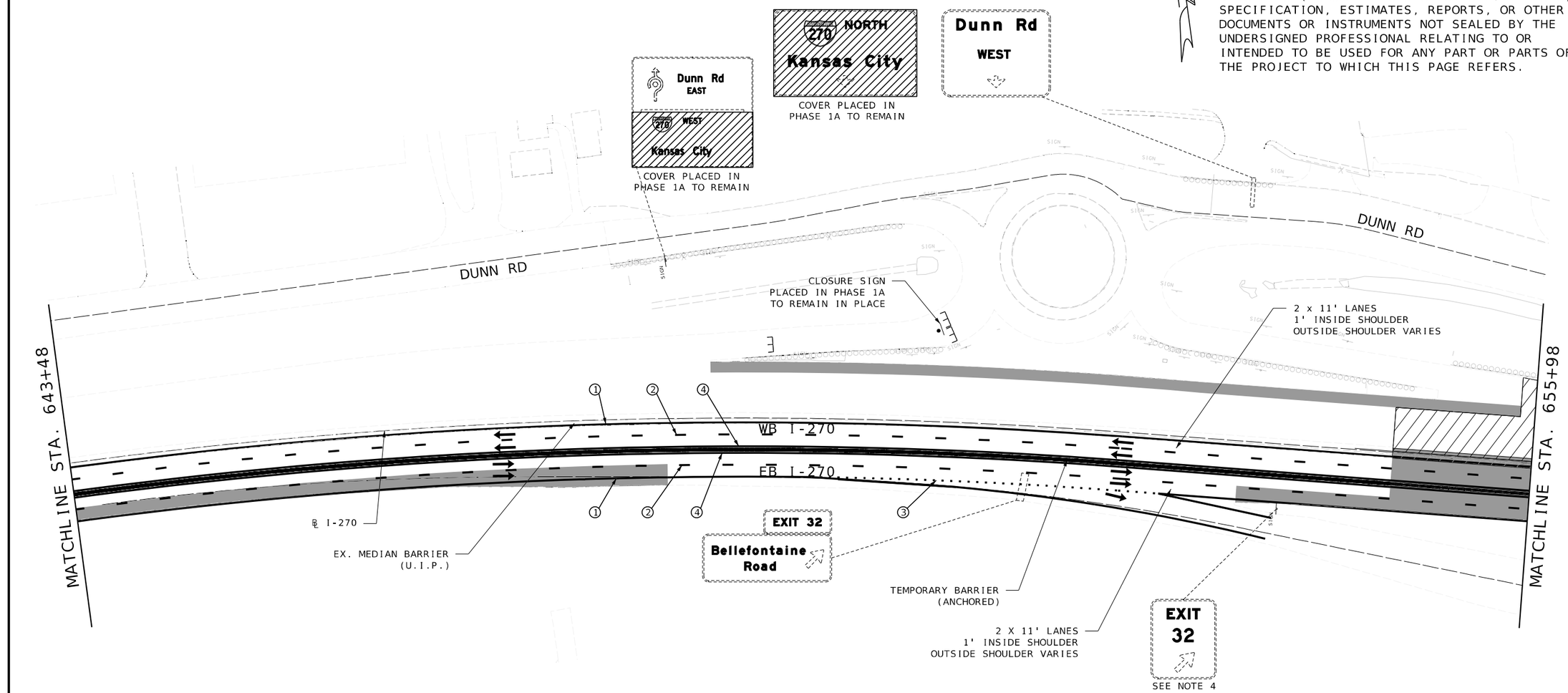

MAINTENANCE OF TRAFFIC LEGEND

- COMPLETED CONSTRUCTION
- WORK ZONE
- TEMPORARY PAVEMENT
- TEMPORARY PAVEMENT PLACED IN PREVIOUS STAGE
- TEMPORARY PAVEMENT TO BE REMOVED IN CURRENT STAGE
- TRAFFIC FLOW
- TEMPORARY LONG-TERM RUMBLE STRIP
- TYPE III MOVEABLE BARRICADE
- DIRECTONAL INDICATOR BARRICADE
- CHANNELIZER
- SIGN (SINGLE SIDED)
- CHANGEABLE MESSAGE SIGN
- FLASHING ARROW PANEL

STRIPING NOTES

1. 4-INCH TEMPORARY PAVEMENT MARKING PAINT, WHITE, SOLID
2. 4-INCH TEMPORARY PAVEMENT MARKING PAINT, WHITE, 10' DASH 30' SKIP
3. 4-INCH TEMPORARY PAVEMENT MARKING PAINT, WHITE, DOTTED
4. 4-INCH TEMPORARY PAVEMENT MARKING PAINT, YELLOW, SOLID

SCALE
0 50 100 150

TRAFFIC CONTROL PLAN
PHASE 2
SHEET 6 OF 10

STATE OF MISSOURI
JONATHAN R. LODS
NUMBER PE-2017000326
PROFESSIONAL ENGINEER

DATE PREPARED
3/20/2026

ROUTE	STATE
I-270	MO
DISTRICT	SHEET NO.
STL	65

COUNTY
ST. LOUIS

JOB NO.
JSL0021

CONTRACT ID.
.

PROJECT NO.
.

BRIDGE NO.
.

DESCRIPTION	DATE
.	.

IF A SEAL IS PRESENT ON THIS SHEET IT HAS BEEN ELECTRONICALLY SEALED AND DATED.

MISSOURI HIGHWAYS AND TRANSPORTATION COMMISSION
105 WEST CAPITOL
JEFFERSON CITY, MO 65102
1-888-ASK-MODOT (1-888-275-6636)

HORNER SHIFRIN
401 S. 18TH ST., STE. 400 ST. LOUIS, MO 63103
314.241.1976 FAX 314.241.1666
WWW.HORNERSHIFRIN.COM
DISCIPLINE: PROFESSIONAL ENGINEERING
CERTIFICATE OF AUTHORITY: 000159
EXPIRATION DATE: DECEMBER 31, 2026

DISCLAIMER

THE PROFESSIONAL WHOSE SIGNATURE AND PERSONAL SEAL APPEAR HEREON ASSUMES RESPONSIBILITY ONLY FOR WHAT APPEARS ON THIS PAGE, AND DISCLAIMS (PURSUANT TO SECTION 327.411 RSMO) SPECIFICATION, ESTIMATES, REPORTS, OR OTHER DOCUMENTS OR INSTRUMENTS NOT SEALED BY THE UNDERSIGNED PROFESSIONAL RELATING TO OR INTENDED TO BE USED FOR ANY PART OR PARTS OF THE PROJECT TO WHICH THIS PAGE REFERS.

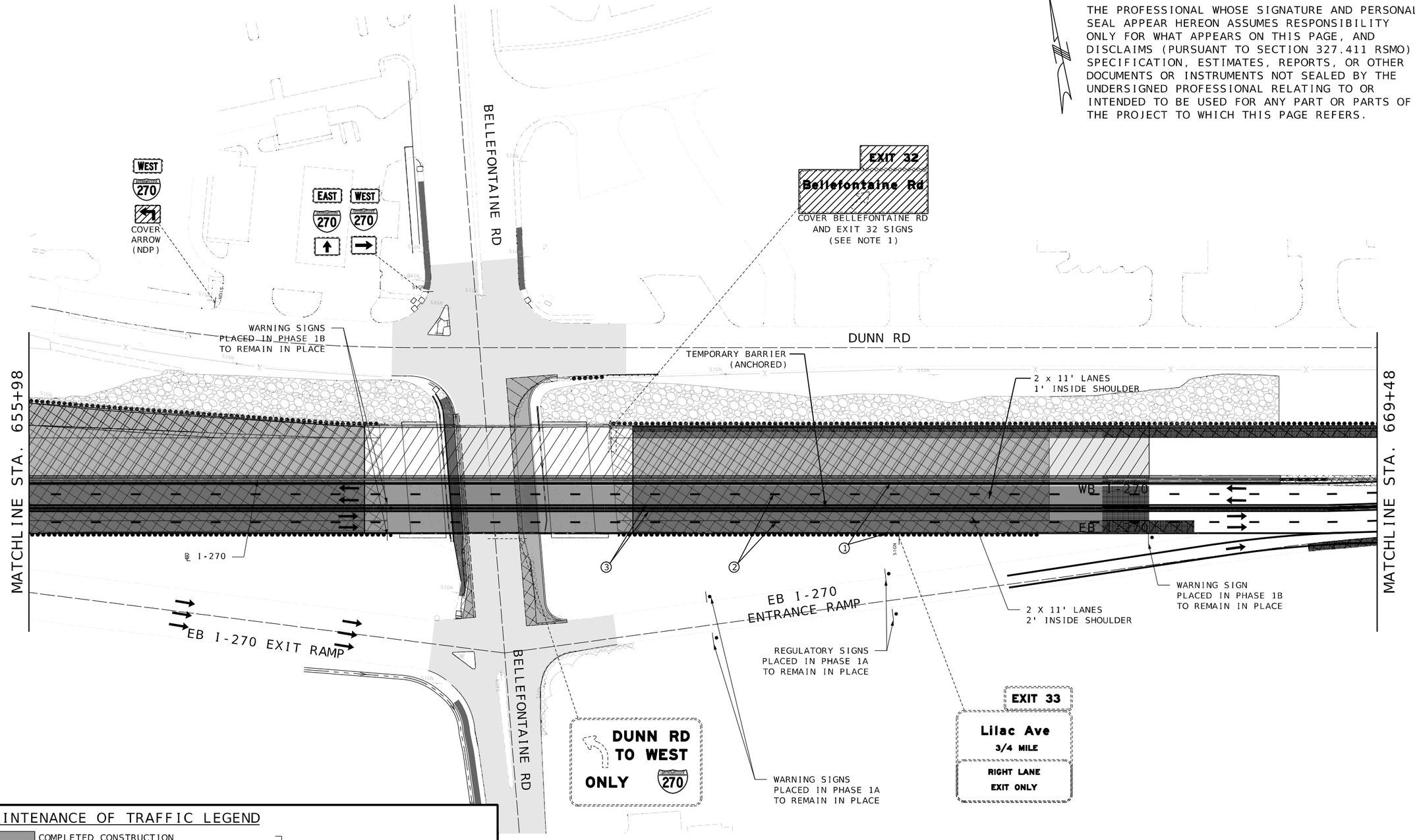

MAINTENANCE OF TRAFFIC LEGEND

- COMPLETED CONSTRUCTION
- WORK ZONE
- TEMPORARY PAVEMENT
- TEMPORARY PAVEMENT PLACED IN PREVIOUS STAGE
- TEMPORARY PAVEMENT TO BE REMOVED IN CURRENT STAGE
- TRAFFIC FLOW
- TEMPORARY LONG-TERM RUMBLE STRIP
- TYPE III MOVEABLE BARRICADE
- DIRECTONAL INDICATOR BARRICADE
- CHANNELIZER
- SIGN (SINGLE SIDED)
- CHANGEABLE MESSAGE SIGN
- FLASHING ARROW PANEL

STRIPING NOTES

1. 4-INCH TEMPORARY PAVEMENT MARKING PAINT, WHITE, SOLID
2. 4-INCH TEMPORARY PAVEMENT MARKING PAINT, WHITE, 10' DASH 30' SKIP
3. 4-INCH TEMPORARY PAVEMENT MARKING PAINT, WHITE, DOTTED
4. 4-INCH TEMPORARY PAVEMENT MARKING PAINT, YELLOW, SOLID

SCALE

0 50 100 150

TRAFFIC CONTROL PLAN
PHASE 2
SHEET 7 OF 10

STATE OF MISSOURI
JONATHAN R. LODS
NUMBER PE-2017000326
PROFESSIONAL ENGINEER

DATE PREPARED	3/26/2026
ROUTE	I-270
STATE	MO
DISTRICT	STL
SHEET NO.	66
COUNTY	ST. LOUIS
JOB NO.	JSL0021
CONTRACT ID.	.
PROJECT NO.	.
BRIDGE NO.	.

DATE	DESCRIPTION
.	.

IF A SEAL IS PRESENT ON THIS SHEET IT HAS BEEN ELECTRONICALLY SEALED AND DATED.

MISSOURI HIGHWAYS AND TRANSPORTATION COMMISSION

MoDOT

105 WEST CAPITOL
JEFFERSON CITY, MO 65102
1-888-ASK-MODOT (1-888-275-6636)

HORNER SHIFRIN

401 S. 18TH ST., STE. 400 ST. LOUIS, MO 63103
314-531-4321 • FAX 314-531-6966
WWW.HORNERSHIFRIN.COM
DISCIPLINE: PROFESSIONAL ENGINEERING
CERTIFICATE OF AUTHORITY: 000159
EXPIRATION DATE: DECEMBER 31, 2026

...\H&S\SL0021 MOT\Phase 2 Sheets 2:41:55 PM 3/26/2026

DISCLAIMER

THE PROFESSIONAL WHOSE SIGNATURE AND PERSONAL SEAL APPEAR HEREON ASSUMES RESPONSIBILITY ONLY FOR WHAT APPEARS ON THIS PAGE, AND DISCLAIMS (PURSUANT TO SECTION 327.411 RSMO) SPECIFICATION, ESTIMATES, REPORTS, OR OTHER DOCUMENTS OR INSTRUMENTS NOT SEALED BY THE UNDERSIGNED PROFESSIONAL RELATING TO OR INTENDED TO BE USED FOR ANY PART OR PARTS OF THE PROJECT TO WHICH THIS PAGE REFERS.

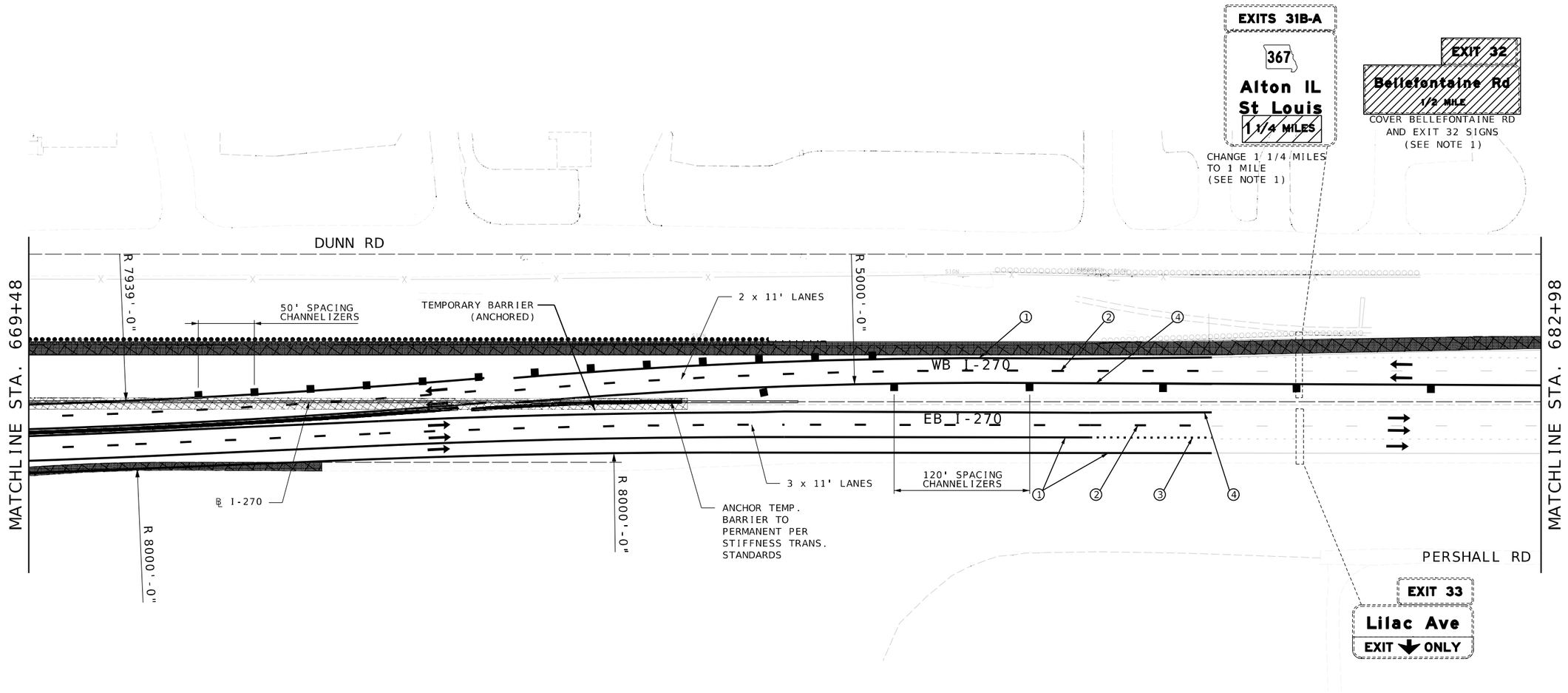

MAINTENANCE OF TRAFFIC LEGEND

- COMPLETED CONSTRUCTION
- WORK ZONE
- TEMPORARY PAVEMENT
- TEMPORARY PAVEMENT PLACED IN PREVIOUS STAGE
- TEMPORARY PAVEMENT TO BE REMOVED IN CURRENT STAGE
- TRAFFIC FLOW
- TEMPORARY LONG-TERM RUMBLE STRIP
- TYPE III MOVEABLE BARRICADE
- DIRECTONAL INDICATOR BARRICADE
- CHANNELIZER
- SIGN (SINGLE SIDED)
- CHANGEABLE MESSAGE SIGN
- FLASHING ARROW PANEL

STRIPING NOTES

1. 4-INCH TEMPORARY PAVEMENT MARKING PAINT, WHITE, SOLID
2. 4-INCH TEMPORARY PAVEMENT MARKING PAINT, WHITE, 10' DASH 30' SKIP
3. 4-INCH TEMPORARY PAVEMENT MARKING PAINT, WHITE, DOTTED
4. 4-INCH TEMPORARY PAVEMENT MARKING PAINT, YELLOW, SOLID

SCALE

0 50 100 150

TRAFFIC CONTROL PLAN
PHASE 2
SHEET 8 OF 10

STATE OF MISSOURI
JONATHAN R. LODS
NUMBER PE-2017000326
PROFESSIONAL ENGINEER

DATE PREPARED	3/26/2026
ROUTE	I-270
STATE	MO
DISTRICT	STL
SHEET NO.	67
COUNTY	ST. LOUIS
JOB NO.	JSL0021
CONTRACT ID.	.
PROJECT NO.	.
BRIDGE NO.	.

DATE	DESCRIPTION
.	.

IF A SEAL IS PRESENT ON THIS SHEET IT HAS BEEN ELECTRONICALLY SEALED AND DATED.

MISSOURI HIGHWAYS AND TRANSPORTATION COMMISSION

MoDOT

105 WEST CAPITOL
JEFFERSON CITY, MO 65102
1-888-ASK-MODOT (1-888-275-6636)

HORNER SHIFRIN

401 S. 18TH ST., STE. 400 ST. LOUIS, MO 63103
314-531-4321 • FAX 314-531-6966
WWW.HORNERSHIFRIN.COM
DISCIPLINE: PROFESSIONAL ENGINEERING
CERTIFICATE OF AUTHORITY: 000159
EXPIRATION DATE: DECEMBER 31, 2026

...\H&S\SL0021 MOT\Phase 2 Sheets 2:41:57 PM 3/26/2026

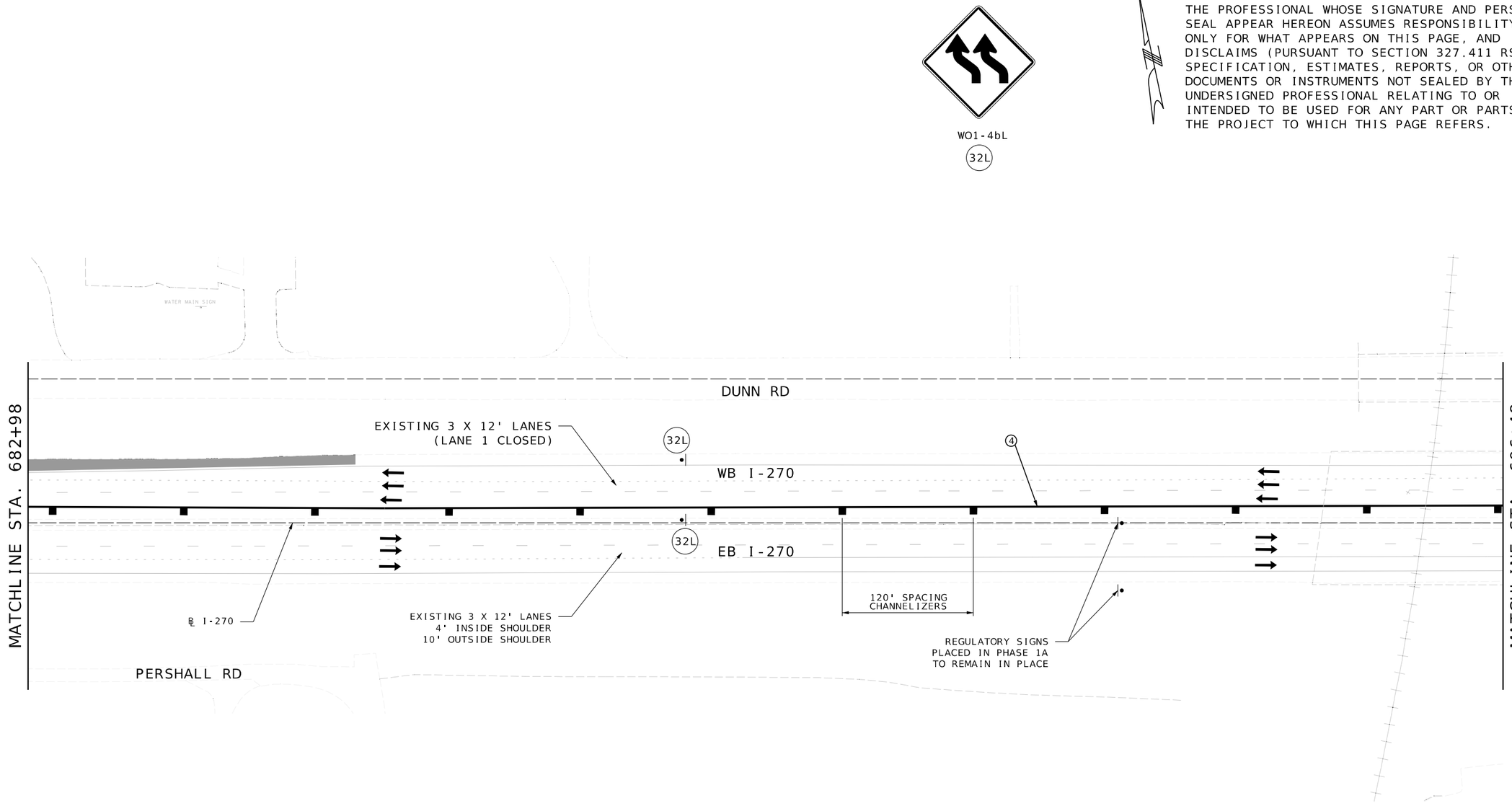

DISCLAIMER

THE PROFESSIONAL WHOSE SIGNATURE AND PERSONAL SEAL APPEAR HEREON ASSUMES RESPONSIBILITY ONLY FOR WHAT APPEARS ON THIS PAGE, AND DISCLAIMS (PURSUANT TO SECTION 327.411 RSMO) SPECIFICATION, ESTIMATES, REPORTS, OR OTHER DOCUMENTS OR INSTRUMENTS NOT SEALED BY THE UNDERSIGNED PROFESSIONAL RELATING TO OR INTENDED TO BE USED FOR ANY PART OR PARTS OF THE PROJECT TO WHICH THIS PAGE REFERS.

MAINTENANCE OF TRAFFIC LEGEND

- COMPLETED CONSTRUCTION
- WORK ZONE
- TEMPORARY PAVEMENT
- TEMPORARY PAVEMENT PLACED IN PREVIOUS STAGE
- TEMPORARY PAVEMENT TO BE REMOVED IN CURRENT STAGE
- TRAFFIC FLOW
- TEMPORARY LONG-TERM RUMBLE STRIP
- TYPE III MOVEABLE BARRICADE
- DIRECTONAL INDICATOR BARRICADE
- CHANNELIZER
- SIGN (SINGLE SIDED)
- CHANGEABLE MESSAGE SIGN
- FLASHING ARROW PANEL

STRIPING NOTES

1. 4-INCH TEMPORARY PAVEMENT MARKING PAINT, WHITE, SOLID
2. 4-INCH TEMPORARY PAVEMENT MARKING PAINT, WHITE, 10' DASH 30' SKIP
3. 4-INCH TEMPORARY PAVEMENT MARKING PAINT, WHITE, DOTTED
4. 4-INCH TEMPORARY PAVEMENT MARKING PAINT, YELLOW, SOLID

SCALE
0 50 100 150

TRAFFIC CONTROL PLAN
PHASE 2
SHEET 9 OF 10

STATE OF MISSOURI
JONATHAN R. LODS
NUMBER PE-2017000326
PROFESSIONAL ENGINEER

DATE PREPARED	3/20/2026
ROUTE	I-270
STATE	MO
DISTRICT	STL
SHEET NO.	68
COUNTY	ST. LOUIS
JOB NO.	JSL0021
CONTRACT ID.	.
PROJECT NO.	.
BRIDGE NO.	.

DATE	DESCRIPTION
.	.

MISSOURI HIGHWAYS AND TRANSPORTATION COMMISSION
MoDOT
105 WEST CAPITOL
JEFFERSON CITY, MO 65102
1-888-ASK-MODOT (1-888-275-6636)

HORNER SHIFRIN
401 S. 18TH ST., STE. 400 ST. LOUIS, MO 63103
314-531-4321 - FAX 314-531-6966
WWW.HORNERSHIFRIN.COM
DISCIPLINE: PROFESSIONAL ENGINEERING
CERTIFICATE OF AUTHORITY: 000159
EXPIRATION DATE: DECEMBER 31, 2026

IF A SEAL IS PRESENT ON THIS SHEET IT HAS BEEN ELECTRONICALLY SEALED AND DATED.

...\H&S\SL0021 MOT\Phase 2 Sheets 12:15:20 PM 3/20/2026

DISCLAIMER

THE PROFESSIONAL WHOSE SIGNATURE AND PERSONAL SEAL APPEAR HEREON ASSUMES RESPONSIBILITY ONLY FOR WHAT APPEARS ON THIS PAGE, AND DISCLAIMS (PURSUANT TO SECTION 327.411 RSMO) SPECIFICATION, ESTIMATES, REPORTS, OR OTHER DOCUMENTS OR INSTRUMENTS NOT SEALED BY THE UNDERSIGNED PROFESSIONAL RELATING TO OR INTENDED TO BE USED FOR ANY PART OR PARTS OF THE PROJECT TO WHICH THIS PAGE REFERS.

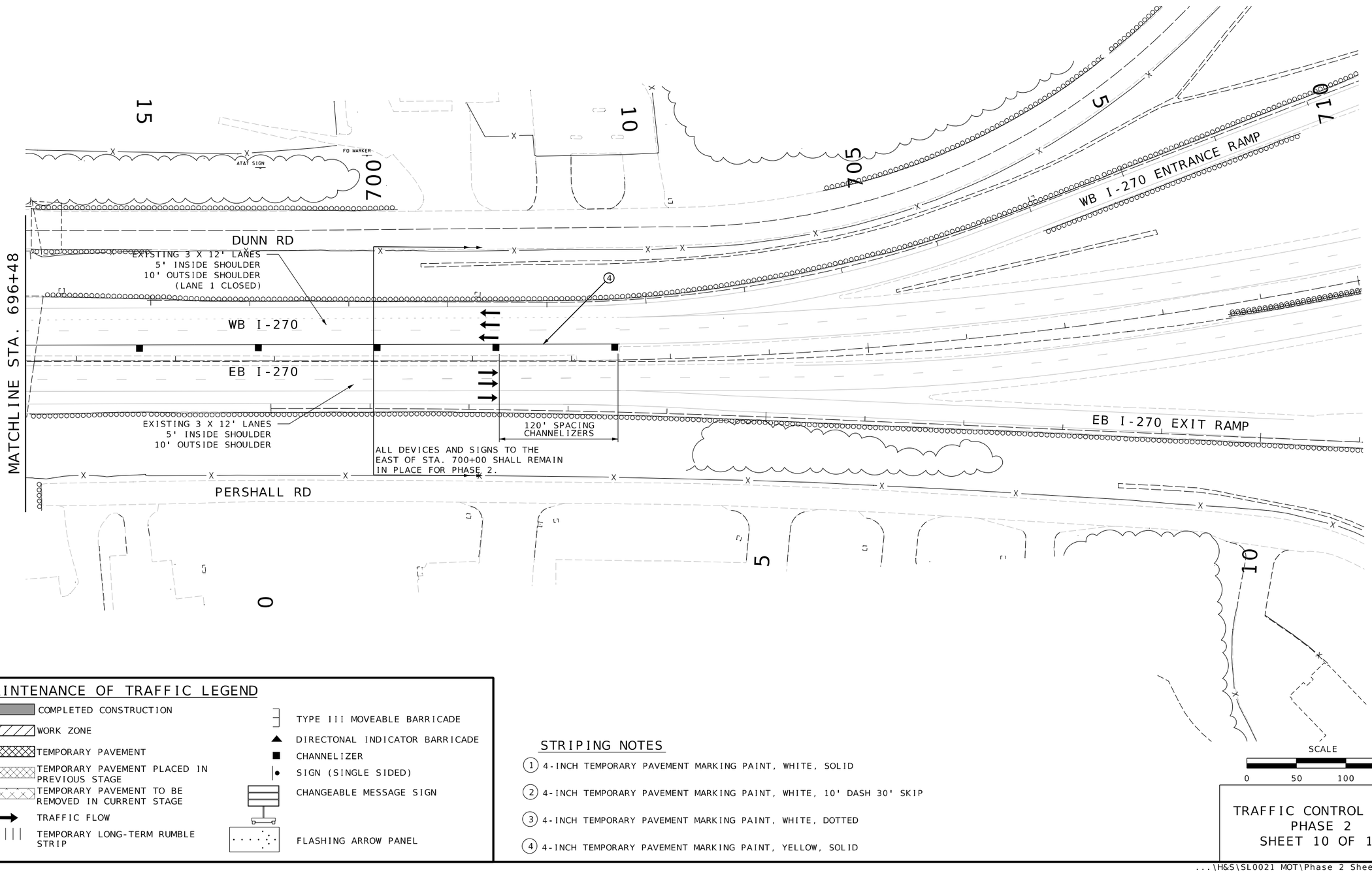

MAINTENANCE OF TRAFFIC LEGEND

- COMPLETED CONSTRUCTION
- WORK ZONE
- TEMPORARY PAVEMENT
- TEMPORARY PAVEMENT PLACED IN PREVIOUS STAGE
- TEMPORARY PAVEMENT TO BE REMOVED IN CURRENT STAGE
- TRAFFIC FLOW
- TEMPORARY LONG-TERM RUMBLE STRIP
- TYPE III MOVEABLE BARRICADE
- DIRECTONAL INDICATOR BARRICADE
- CHANNELIZER
- SIGN (SINGLE SIDED)
- CHANGEABLE MESSAGE SIGN
- FLASHING ARROW PANEL

STRIPING NOTES

1. 4-INCH TEMPORARY PAVEMENT MARKING PAINT, WHITE, SOLID
2. 4-INCH TEMPORARY PAVEMENT MARKING PAINT, WHITE, 10' DASH 30' SKIP
3. 4-INCH TEMPORARY PAVEMENT MARKING PAINT, WHITE, DOTTED
4. 4-INCH TEMPORARY PAVEMENT MARKING PAINT, YELLOW, SOLID

TRAFFIC CONTROL PLAN PHASE 2 SHEET 10 OF 10

STATE OF MISSOURI
JONATHAN R. LODS
NUMBER PE-2017000326
PROFESSIONAL ENGINEER

DATE PREPARED
3/20/2026

ROUTE	STATE
I-270	MO
DISTRICT	SHEET NO.
STL	69

COUNTY
ST. LOUIS

JOB NO.
JSL0021

CONTRACT ID.
.

PROJECT NO.
.

BRIDGE NO.
.

DESCRIPTION	DATE
.	.
.	.
.	.
.	.
.	.
.	.
.	.

IF A SEAL IS PRESENT ON THIS SHEET IT HAS BEEN ELECTRONICALLY SEALED AND DATED.

MISSOURI HIGHWAYS AND TRANSPORTATION COMMISSION
105 WEST CAPITOL
JEFFERSON CITY, MO 65102
1-888-ASK-MODOT (1-888-275-6636)

HORNER SHIFRIN
401 S. 18TH ST., STE. 400 ST. LOUIS, MO 63103
314-241-1976 FAX 314-241-1966
WWW.HORNERSHIFRIN.COM
DISCIPLINE: PROFESSIONAL ENGINEERING
CERTIFICATE OF AUTHORITY: 000159
EXPIRATION DATE: DECEMBER 31, 2026

REV.

...\H&S\SL0021 MOT\Phase 2 Sheets 12:15:21 PM 3/20/2026

GENERAL TRAFFIC CONTROL NOTES:

1. ANY EXISTING GROUND-MOUNTED SIGN THAT CONFLICTS WITH THE TRAFFIC CONTROL SIGNING SHALL BE COMPLETELY COVERED OR REMOVED AT NO DIRECT PAY. COVERING OF EXISTING OVERHEAD SIGNS SHALL BE AS NOTED IN THE PLANS AND PAID AS EACH UNDER BID ITEM "COVER EXISTING OVERHEAD SIGN".

2. PLACEMENT OF TRAFFIC CONTROL SIGNS ARE APPROXIMATE AND MAY BE ADJUSTED TO FIT FIELD CONDITIONS AS APPROVED BY THE ENGINEER.

3. SIGN AND DEVICE LOCATIONS SHALL BE FIELD VERIFIED AND APPROVED BY THE ENGINEER.

4. NO DIRECT PAY WILL BE MADE FOR THE RELOCATION OR TEMPORARY MOUNTING OF EXISTING SIGNS DISPLACED BY THE TEMPORARY WIDENING. METHOD OF TEMPORARY MOUNTING AND LOCATION OF THESE SIGNS TO BE APPROVED BY THE ENGINEER.



WO20-1
(2)



WO21-5b
(21)

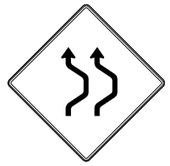
W24-1aR
(57)



GO20-5aP
(54)



R2-1
(4)



R2-1
(25)

STRIPING NOTES

(1) 4-INCH TEMPORARY PAVEMENT MARKING PAINT, WHITE, SOLID

(2) 4-INCH TEMPORARY PAVEMENT MARKING PAINT, WHITE, 10' DASH 30' SKIP

(3) 4-INCH TEMPORARY PAVEMENT MARKING PAINT, WHITE, DOTTED

(4) 4-INCH TEMPORARY PAVEMENT MARKING PAINT, YELLOW, SOLID

DISCLAIMER

THE PROFESSIONAL WHOSE SIGNATURE AND PERSONAL SEAL APPEAR HEREON ASSUMES RESPONSIBILITY ONLY FOR WHAT APPEARS ON THIS PAGE, AND DISCLAIMS (PURSUANT TO SECTION 327.411 RSMO) SPECIFICATION, ESTIMATES, REPORTS, OR OTHER DOCUMENTS OR INSTRUMENTS NOT SEALED BY THE UNDERSIGNED PROFESSIONAL RELATING TO OR INTENDED TO BE USED FOR ANY PART OR PARTS OF THE PROJECT TO WHICH THIS PAGE REFERS.

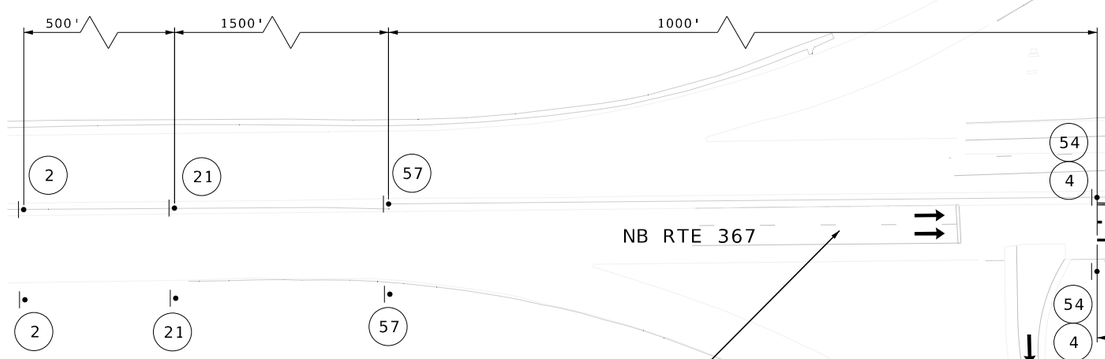

MATCHLINE SEE SHEET 68

MAINTENANCE OF TRAFFIC LEGEND

- COMPLETED CONSTRUCTION
- WORK ZONE
- TEMPORARY PAVEMENT
- TEMPORARY PAVEMENT PLACED IN PREVIOUS STAGE
- TEMPORARY PAVEMENT TO BE REMOVED IN CURRENT STAGE
- TRAFFIC FLOW
- TEMPORARY LONG-TERM RUMBLE STRIP
- TYPE III MOVEABLE BARRICADE
- DIRECTONAL INDICATOR BARRICADE
- CHANNELIZER
- SIGN (SINGLE SIDED)
- CHANGEABLE MESSAGE SIGN
- FLASHING ARROW PANEL

SCALE

0 50 100 150

TRAFFIC CONTROL PLAN
ROUTE 367 BRIDGE PIER
SHEET 1 OF 2

STATE OF MISSOURI
JONATHAN R. LODS
NUMBER PE-2017000326
PROFESSIONAL ENGINEER

DATE PREPARED 3/20/2026

ROUTE	STATE
I-270	MO
DISTRICT	SHEET NO.
STL	70

COUNTY: ST. LOUIS
JOB NO.: JSL0021
CONTRACT ID.:
PROJECT NO.:
BRIDGE NO.:

DESCRIPTION	DATE

MISSOURI HIGHWAYS AND TRANSPORTATION COMMISSION
105 WEST CAPITOL
JEFFERSON CITY, MO 65102
1-888-ASK-MODOT (1-888-275-6636)

HORNER & SHIFRIN
401 S. 18TH ST., STE. 400 ST. LOUIS, MO 63103
314-241-1976 FAX 314-241-1988
WWW.HORNERSHIFRIN.COM
DISCIPLINE: PROFESSIONAL ENGINEERING
CERTIFICATE OF AUTHORITY: 000159
EXPIRATION DATE: DECEMBER 31, 2026

IF A SEAL IS PRESENT ON THIS SHEET IT HAS BEEN ELECTRONICALLY SEALED AND DATED.

DISCLAIMER

THE PROFESSIONAL WHOSE SIGNATURE AND PERSONAL SEAL APPEAR HEREON ASSUMES RESPONSIBILITY ONLY FOR WHAT APPEARS ON THIS PAGE, AND DISCLAIMS (PURSUANT TO SECTION 327.411 RSMO) SPECIFICATION, ESTIMATES, REPORTS, OR OTHER DOCUMENTS OR INSTRUMENTS NOT SEALED BY THE UNDERSIGNED PROFESSIONAL RELATING TO OR INTENDED TO BE USED FOR ANY PART OR PARTS OF THE PROJECT TO WHICH THIS PAGE REFERS.

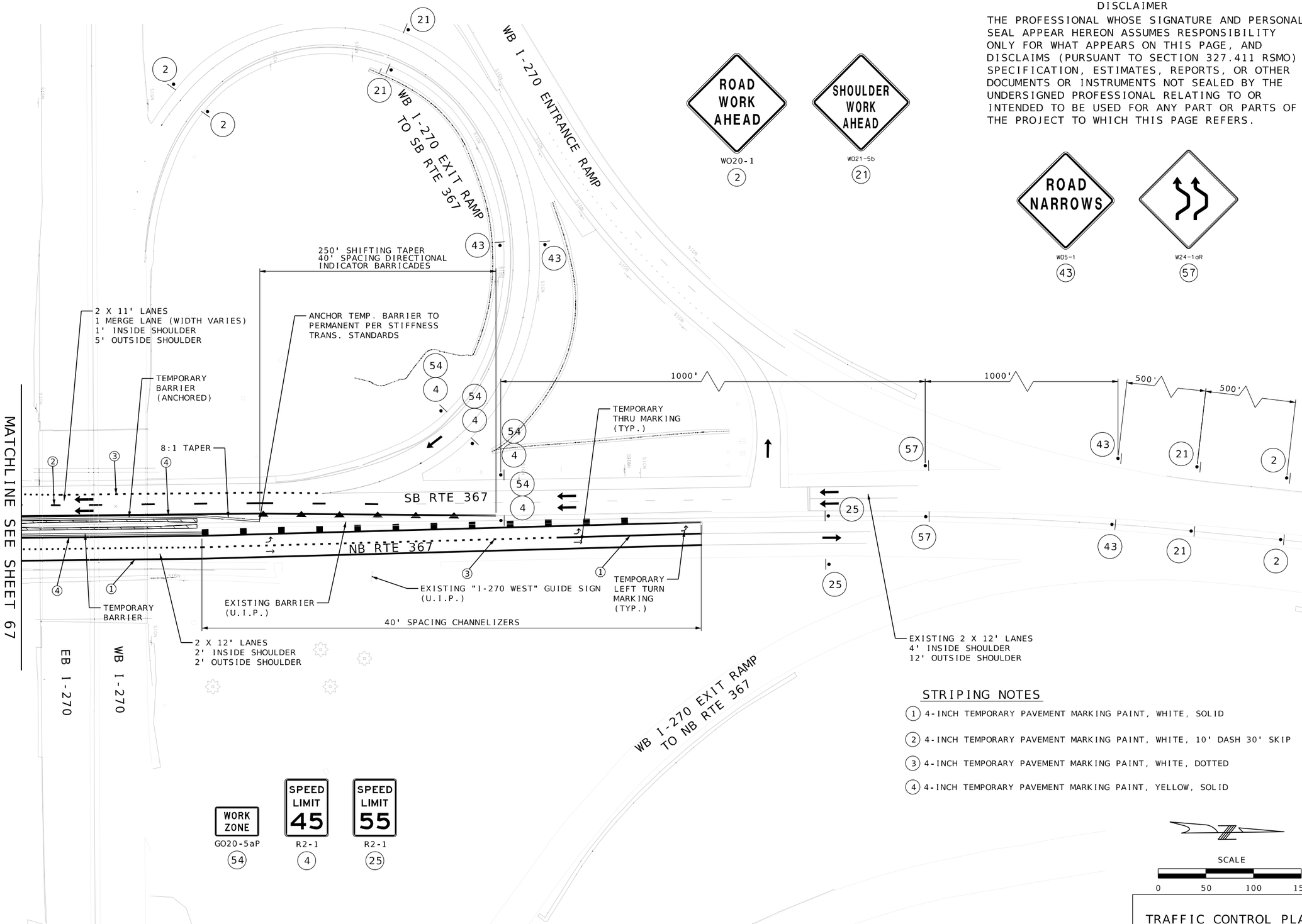

STRIPING NOTES

1. 4-INCH TEMPORARY PAVEMENT MARKING PAINT, WHITE, SOLID
2. 4-INCH TEMPORARY PAVEMENT MARKING PAINT, WHITE, 10' DASH 30' SKIP
3. 4-INCH TEMPORARY PAVEMENT MARKING PAINT, WHITE, DOTTED
4. 4-INCH TEMPORARY PAVEMENT MARKING PAINT, YELLOW, SOLID

TRAFFIC CONTROL PLAN
ROUTE 367 BRIDGE PIER
SHEET 2 OF 2

STATE OF MISSOURI
JONATHAN R. LOOS
NUMBER PE-2017000326
PROFESSIONAL ENGINEER

DATE PREPARED	
3/20/2026	
ROUTE I-270	STATE MO
DISTRICT STL	SHEET NO. 71
COUNTY ST. LOUIS	
JOB NO. JSL0021	
CONTRACT ID.	
PROJECT NO.	
BRIDGE NO.	

DATE	DESCRIPTION

IF A SEAL IS PRESENT ON THIS SHEET IT HAS BEEN ELECTRONICALLY SEALED AND DATED.

MISSOURI HIGHWAYS AND TRANSPORTATION COMMISSION

MoDOT

105 WEST CAPITOL
JEFFERSON CITY, MO 65102
1-888-ASK-MODOT (1-888-275-6636)

HORNER SHIFRIN

401 S. 18TH ST., STE. 400 ST. LOUIS, MO 63103
314-531-4321 - FAX 314-531-6966
WWW.HORNERSHIFRIN.COM
DISCIPLINE: PROFESSIONAL ENGINEERING
CERTIFICATE OF AUTHORITY: 000159
EXPIRATION DATE: DECEMBER 31, 2026

...\367 Bridge Pier TC Sheets 12:15:32 PM 3/20/2026

GENERAL TRAFFIC CONTROL NOTES:

1. ANY EXISTING GROUND-MOUNTED SIGN THAT CONFLICTS WITH THE TRAFFIC CONTROL SIGNING SHALL BE COMPLETELY COVERED OR REMOVED AT NO DIRECT PAY. COVERING OF EXISTING OVERHEAD SIGNS SHALL BE AS NOTED IN THE PLANS AND PAID AS EACH UNDER BID ITEM "COVER EXISTING OVERHEAD SIGN".

2. PLACEMENT OF TRAFFIC CONTROL SIGNS ARE APPROXIMATE AND MAY BE ADJUSTED TO FIT FIELD CONDITIONS AS APPROVED BY THE ENGINEER.

3. SIGN AND DEVICE LOCATIONS SHALL BE FIELD VERIFIED AND APPROVED BY THE ENGINEER.

4. NO DIRECT PAY WILL BE MADE FOR THE RELOCATION OR TEMPORARY MOUNTING OF EXISTING SIGNS DISPLACED BY THE TEMPORARY WIDENING. METHOD OF TEMPORARY MOUNTING AND LOCATION OF THESE SIGNS TO BE APPROVED BY THE ENGINEER.

STRIPING NOTES

1. 4-INCH TEMPORARY PAVEMENT MARKING PAINT, WHITE, SOLID
2. 4-INCH TEMPORARY PAVEMENT MARKING PAINT, WHITE, 10' DASH 30' SKIP
3. 4-INCH TEMPORARY PAVEMENT MARKING PAINT, WHITE, DOTTED
4. 4-INCH TEMPORARY PAVEMENT MARKING PAINT, YELLOW, SOLID

DISCLAIMER

THE PROFESSIONAL WHOSE SIGNATURE AND PERSONAL SEAL APPEAR HEREON ASSUMES RESPONSIBILITY ONLY FOR WHAT APPEARS ON THIS PAGE, AND DISCLAIMS (PURSUANT TO SECTION 327.411 RSMO) SPECIFICATION, ESTIMATES, REPORTS, OR OTHER DOCUMENTS OR INSTRUMENTS NOT SEALED BY THE UNDERSIGNED PROFESSIONAL RELATING TO OR INTENDED TO BE USED FOR ANY PART OR PARTS OF THE PROJECT TO WHICH THIS PAGE REFERS.

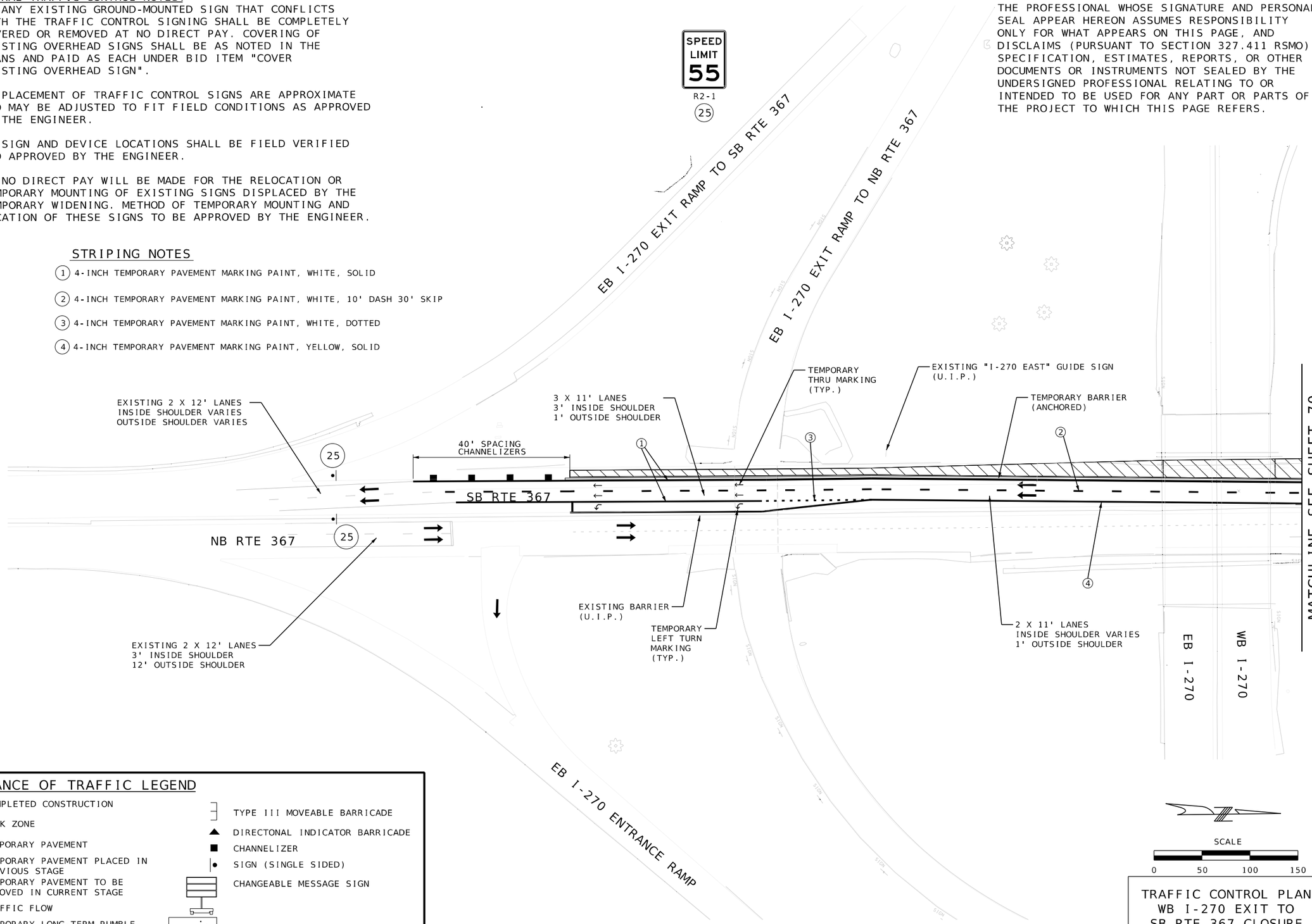

MAINTENANCE OF TRAFFIC LEGEND

- COMPLETED CONSTRUCTION
- WORK ZONE
- TEMPORARY PAVEMENT
- TEMPORARY PAVEMENT PLACED IN PREVIOUS STAGE
- TEMPORARY PAVEMENT TO BE REMOVED IN CURRENT STAGE
- TRAFFIC FLOW
- TEMPORARY LONG-TERM RUMBLE STRIP
- TYPE III MOVEABLE BARRICADE
- DIRECTONAL INDICATOR BARRICADE
- CHANNELIZER
- SIGN (SINGLE SIDED)
- CHANGEABLE MESSAGE SIGN
- FLASHING ARROW PANEL

TRAFFIC CONTROL PLAN
WB I-270 EXIT TO
SB RTE 367 CLOSURE
SHEET 1 OF 2

STATE OF MISSOURI
JONATHAN R. LOOS
NUMBER PE-2017000326
PROFESSIONAL ENGINEER

DATE	.
DATE PREPARED	3/20/2026
ROUTE	I-270
STATE	MO
DISTRICT	STL
SHEET NO.	72
COUNTY	ST. LOUIS
JOB NO.	JSL0021
CONTRACT ID.	.
PROJECT NO.	.
BRIDGE NO.	.

DATE	DESCRIPTION
.	.

MISSOURI HIGHWAYS AND TRANSPORTATION COMMISSION

MoDOT
105 WEST CAPITOL
JEFFERSON CITY, MO 65102
1-888-ASK-MODOT (1-888-275-6636)

HORNER SHIFRIN
401 S. 18TH ST., STE. 400 ST. LOUIS, MO 63103
314-531-4321 - FAX 314-531-6966
WWW.HORNERSHIFRIN.COM
DISCIPLINE: PROFESSIONAL ENGINEERING
CERTIFICATE OF AUTHORITY: 000159
EXPIRATION DATE: DECEMBER 31, 2026

IF A SEAL IS PRESENT ON THIS SHEET, IT HAS BEEN ELECTRONICALLY SEALED AND DATED.

REV.

...\367 Exit Ramp TC Sheets 12:15:42 PM 3/20/2026

STRIPING NOTES

1. 4-INCH TEMPORARY PAVEMENT MARKING PAINT, WHITE, SOLID
2. 4-INCH TEMPORARY PAVEMENT MARKING PAINT, WHITE, 10' DASH 30' SKIP
3. 4-INCH TEMPORARY PAVEMENT MARKING PAINT, WHITE, DOTTED
4. 4-INCH TEMPORARY PAVEMENT MARKING PAINT, YELLOW, SOLID

DISCLAIMER

THE PROFESSIONAL WHOSE SIGNATURE AND PERSONAL SEAL APPEAR HEREON ASSUMES RESPONSIBILITY ONLY FOR WHAT APPEARS ON THIS PAGE, AND DISCLAIMS (PURSUANT TO SECTION 327.411 RSMO) SPECIFICATION, ESTIMATES, REPORTS, OR OTHER DOCUMENTS OR INSTRUMENTS NOT SEALED BY THE UNDERSIGNED PROFESSIONAL RELATING TO OR INTENDED TO BE USED FOR ANY PART OR PARTS OF THE PROJECT TO WHICH THIS PAGE REFERS.

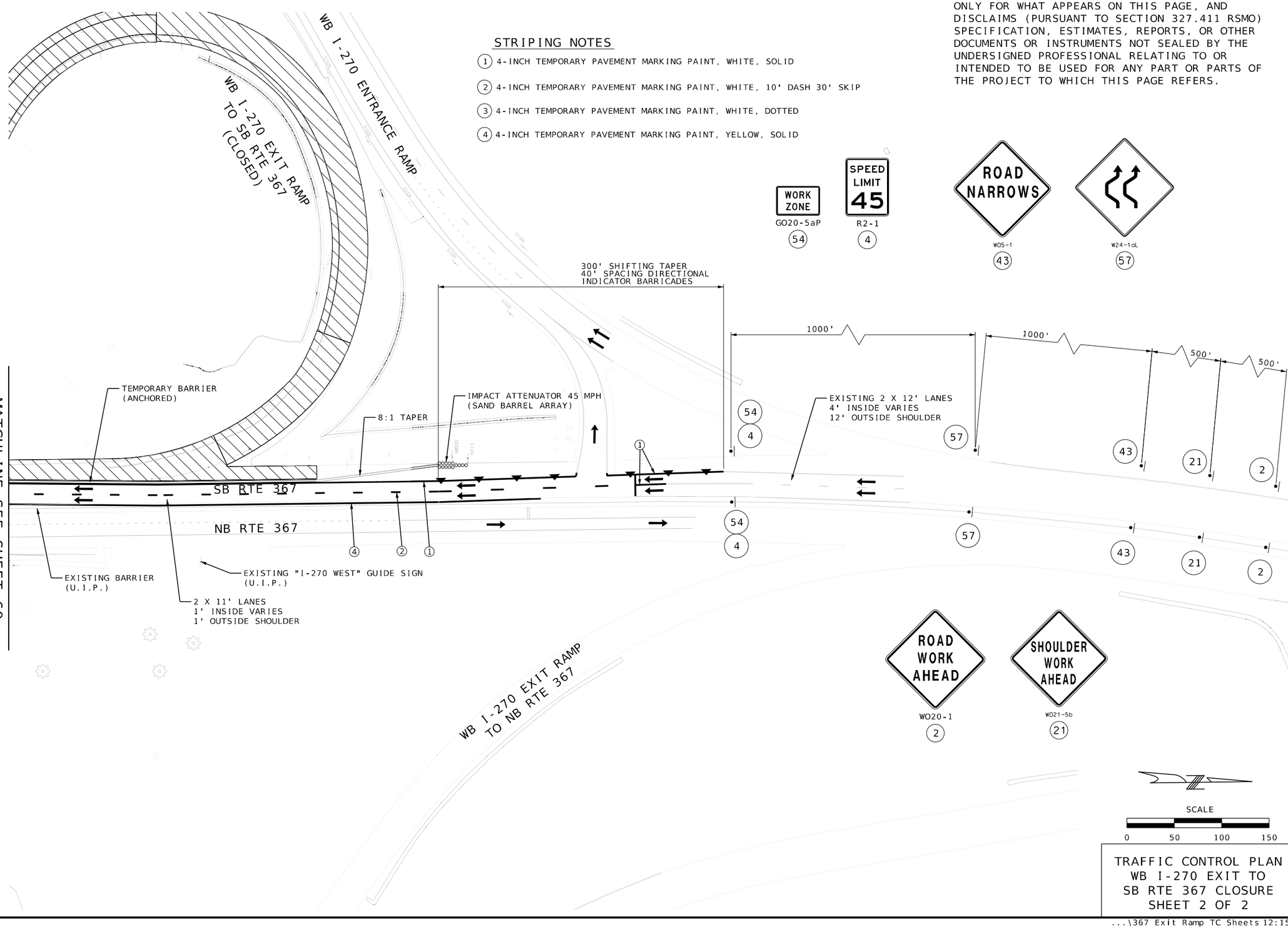

TRAFFIC CONTROL PLAN WB I-270 EXIT TO SB RTE 367 CLOSURE SHEET 2 OF 2

IF A SEAL IS PRESENT ON THIS SHEET IT HAS BEEN ELECTRONICALLY SEALED AND DATED.

JONATHAN R. LODS
NUMBER PE-2017000326
STATE OF MISSOURI
PROFESSIONAL ENGINEER

DATE PREPARED: 3/20/2026

ROUTE	STATE
I-270	MO

DISTRICT	SHEET NO.
STL	73

COUNTY: ST. LOUIS
JOB NO.: JSL0021
CONTRACT ID.:
PROJECT NO.:
BRIDGE NO.:

DESCRIPTION	DATE

MISSOURI HIGHWAYS AND TRANSPORTATION COMMISSION
105 WEST CAPITOL
JEFFERSON CITY, MO 65102
1-888-ASK-MODOT (1-888-275-6636)

HORNER SHIFRIN
401 S. 18TH ST., STE. 400 ST. LOUIS, MO 63103
314.241.1976 FAX 314.241.1988
WWW.HORNERSHIFRIN.COM
DISCIPLINE: PROFESSIONAL ENGINEERING
CERTIFICATE OF AUTHORITY: 000159
EXPIRATION DATE: DECEMBER 31, 2026

...\367 Exit Ramp TC Sheets 12:15:43 PM 3/20/2026

GENERAL TRAFFIC CONTROL NOTES:

1. ANY EXISTING GROUND-MOUNTED SIGN THAT CONFLICTS WITH THE TRAFFIC CONTROL SIGNING SHALL BE COMPLETELY COVERED OR REMOVED AT NO DIRECT PAY. COVERING OF EXISTING OVERHEAD SIGNS SHALL BE AS NOTED IN THE PLANS AND PAID AS EACH UNDER BID ITEM "COVER EXISTING OVERHEAD SIGN".

2. PLACEMENT OF TRAFFIC CONTROL SIGNS ARE APPROXIMATE AND MAY BE ADJUSTED TO FIT FIELD CONDITIONS AS APPROVED BY THE ENGINEER.

3. SIGN AND DEVICE LOCATIONS SHALL BE FIELD VERIFIED AND APPROVED BY THE ENGINEER.

4. NO DIRECT PAY WILL BE MADE FOR THE RELOCATION OR TEMPORARY MOUNTING OF EXISTING SIGNS DISPLACED BY THE TEMPORARY WIDENING. METHOD OF TEMPORARY MOUNTING AND LOCATION OF THESE SIGNS TO BE APPROVED BY THE ENGINEER.

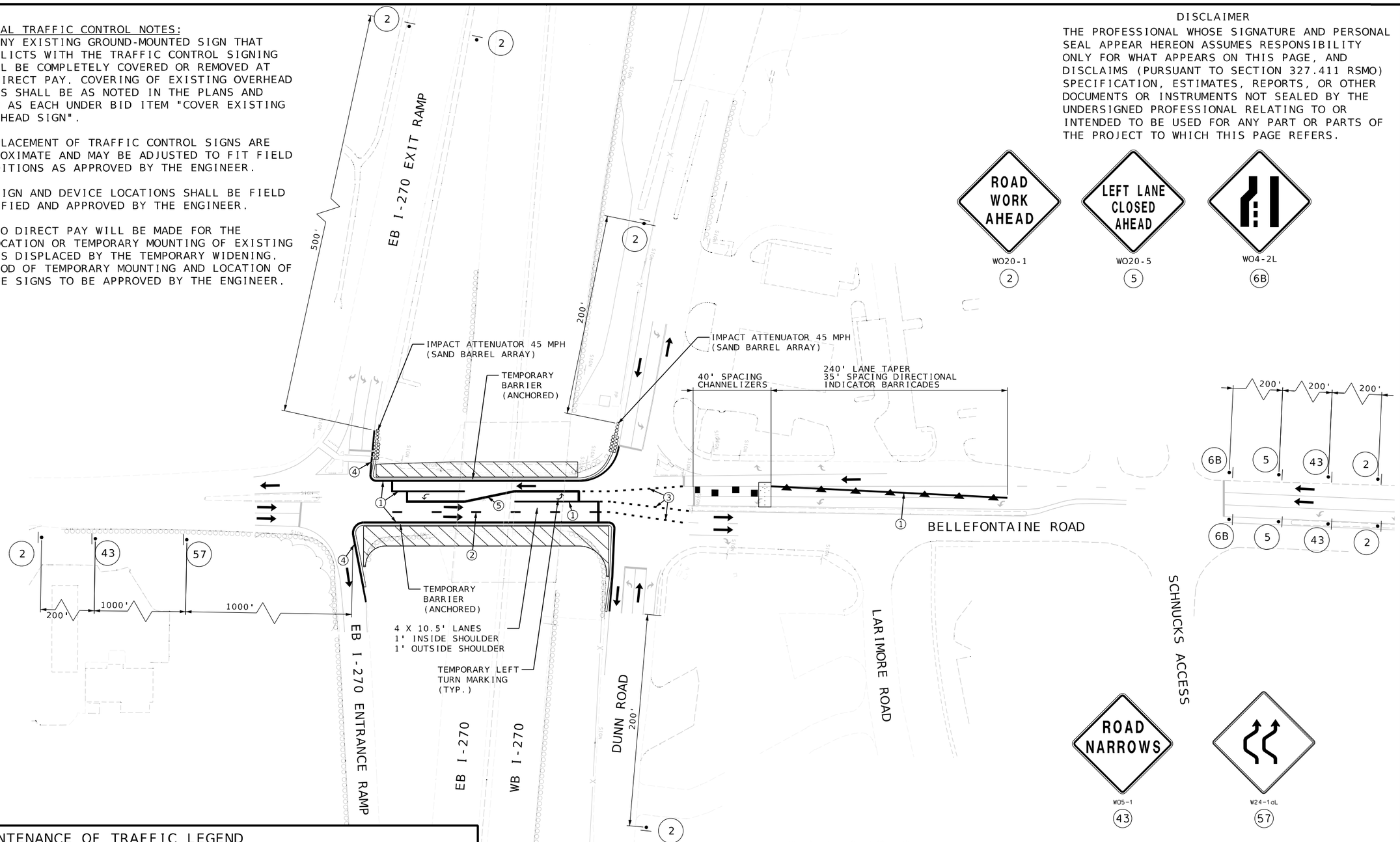

DISCLAIMER

THE PROFESSIONAL WHOSE SIGNATURE AND PERSONAL SEAL APPEAR HEREON ASSUMES RESPONSIBILITY ONLY FOR WHAT APPEARS ON THIS PAGE, AND DISCLAIMS (PURSUANT TO SECTION 327.411 RSMO) SPECIFICATION, ESTIMATES, REPORTS, OR OTHER DOCUMENTS OR INSTRUMENTS NOT SEALED BY THE UNDERSIGNED PROFESSIONAL RELATING TO OR INTENDED TO BE USED FOR ANY PART OR PARTS OF THE PROJECT TO WHICH THIS PAGE REFERS.

WO20-1 (2)

WO20-5 (5)

WO4-2L (6B)

WO5-1 (43)

W24-1aL (57)

MAINTENANCE OF TRAFFIC LEGEND

- COMPLETED CONSTRUCTION
- WORK ZONE
- TEMPORARY PAVEMENT
- TEMPORARY PAVEMENT PLACED IN PREVIOUS STAGE
- TEMPORARY PAVEMENT TO BE REMOVED IN CURRENT STAGE
- TRAFFIC FLOW
- TEMPORARY LONG-TERM RUMBLE STRIP
- TYPE III MOVEABLE BARRICADE
- DIRECTONAL INDICATOR BARRICADE
- CHANNELIZER
- SIGN (SINGLE SIDED)
- CHANGEABLE MESSAGE SIGN
- FLASHING ARROW PANEL

STRIPING NOTES

1. 4-INCH TEMPORARY PAVEMENT MARKING PAINT, WHITE, SOLID
2. 4-INCH TEMPORARY PAVEMENT MARKING PAINT, WHITE, 10' DASH 30' SKIP
3. 4-INCH TEMPORARY PAVEMENT MARKING PAINT, WHITE, DOTTED
4. 4-INCH TEMPORARY PAVEMENT MARKING PAINT, YELLOW, SOLID
5. 4-INCH TEMPORARY PAVEMENT MARKING PAINT, YELLOW, DOUBLE SOLID

SCALE

0 50 100 150

TRAFFIC CONTROL PLAN BELLEFONTAINE ROAD BRIDGE RECONSTRUCTION

STATE OF MISSOURI
JONATHAN R. LOOS
NUMBER PE-2017000326
PROFESSIONAL ENGINEER

DATE PREPARED 5/1/2026

ROUTE	STATE
I-270	MO
DISTRICT	SHEET NO.
STL	74

COUNTY: ST LOUIS
JOB NO.: J5S1000211
CONTRACT ID.:
PROJECT NO.:
BRIDGE NO.:

DESCRIPTION	DATE

IF A SEAL IS PRESENT ON THIS SHEET IT HAS BEEN ELECTRONICALLY SEALED AND DATED.

MISSOURI HIGHWAYS AND TRANSPORTATION COMMISSION
105 WEST CAPITOL
JEFFERSON CITY, MO 65102
1-888-ASK-MODOT (1-888-275-6636)

HORNER SHIFRIN
401 S. 18TH ST., STE. 400 ST. LOUIS, MO 63103
314.241.1976 FAX 314.241.1986
WWW.HORNERSHIFRIN.COM
DISCIPLINE: PROFESSIONAL ENGINEERING
CERTIFICATE OF AUTHORITY: 000159
EXPIRATION DATE: DECEMBER 31, 2026

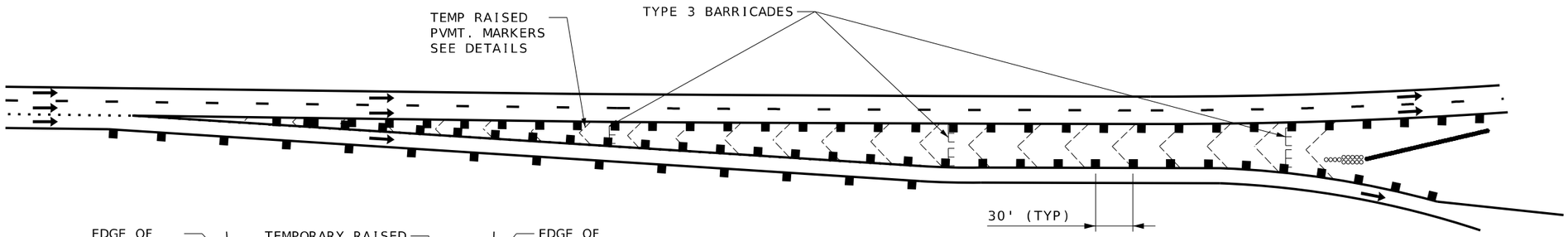

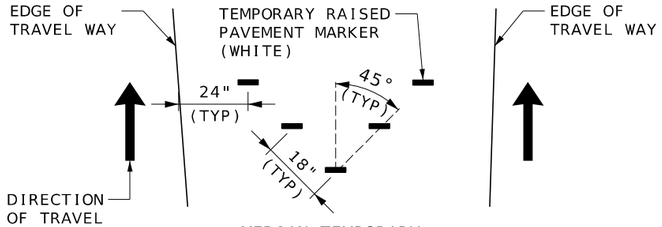

MEDIAN TEMPORARY
RAISED PAVEMENT MARKERS
SEE STANDARD PLAN 620.10 FOR
STANDARD SHOULDER DELINEATION

TRAFFIC SPLIT DETAILS

(NOT TO SCALE)

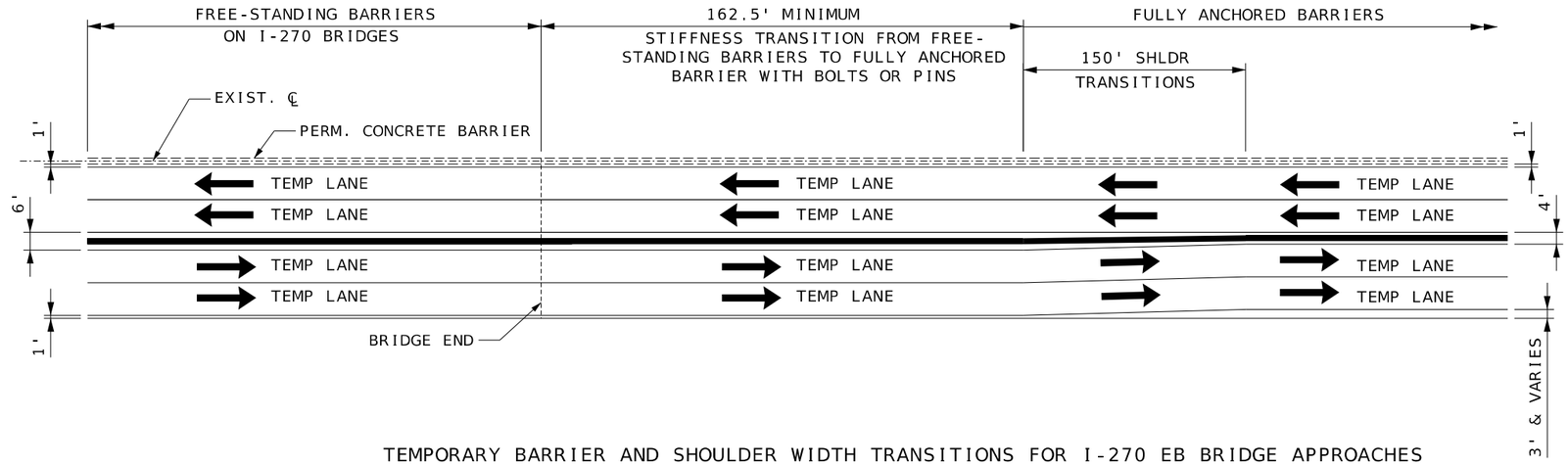

TEMPORARY BARRIER AND SHOULDER WIDTH TRANSITIONS FOR I-270 EB BRIDGE APPROACHES

(NOT TO SCALE)

NOTE: DETAIL DEPICTS TRANSITION ON THE EASTERN SIDE OF THE I-270 EB BRIDGES.
THE TRANSITION LENGTHS ARE APPLICABLE IN BOTH EASTBOUND AND WESTBOUND DIRECTIONS.
SEE BRIDGE PLANS FOR LANE AND SHOULDER WIDTHS.

TEMPORARY TRAFFIC CONTROL
DETAIL SHEET 1 OF 2

IF A SEAL IS PRESENT ON THIS SHEET IT HAS BEEN ELECTRONICALLY SEALED AND DATED.

STATE OF MISSOURI
JONATHAN R. LOOS NUMBER PE-2010020726
PROFESSIONAL ENGINEER

DATE PREPARED
3/20/2026

ROUTE	STATE
I-270	MO
DISTRICT	SHEET NO.
STL	75

COUNTY
ST. LOUIS

JOB NO.
JSL0021

CONTRACT ID.
.

PROJECT NO.
.

BRIDGE NO.
.

DESCRIPTION	DATE
.	.
.	.
.	.
.	.
.	.
.	.
.	.
.	.

REV.

MISSOURI HIGHWAYS AND TRANSPORTATION COMMISSION
105 WEST CAPITOL
JEFFERSON CITY, MO 65102
1-888-ASK-MODOT (1-888-275-6636)

HORNER SHIFRIN
401 S. 18TH ST., STE. 400 ST. LOUIS, MO 63103
314-241-1976 FAX 314-241-1988
WWW.HORNERSHIFRIN.COM
DISCIPLINE: PROFESSIONAL ENGINEERING
CERTIFICATE OF AUTHORITY: 000159
EXPIRATION DATE: DECEMBER 31, 2026

...\Traffic Control Detail Sheets 1 12:16:00 PM 3/20/2026

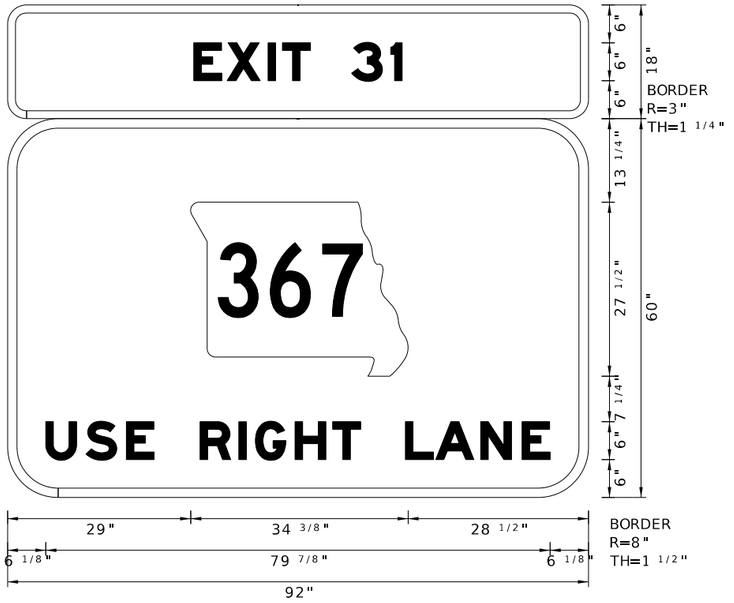

Panel Style: guide_fwy_gore.ssi
M.U.T.C.D.:: 2023 Edition

101

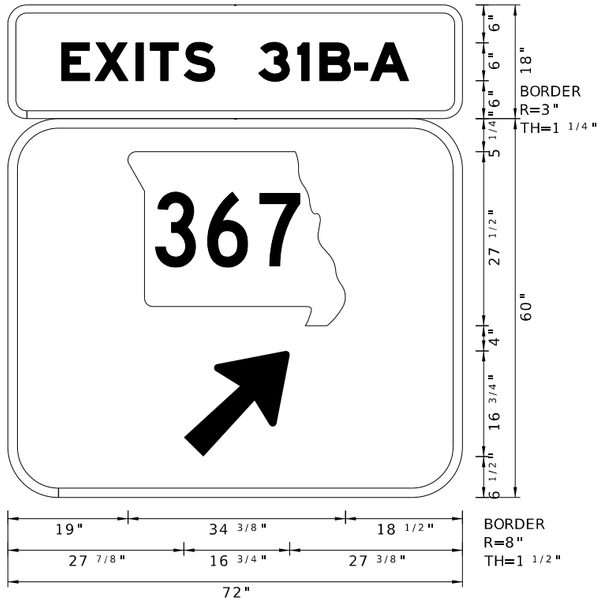

Panel Style: guide_fwy_gore.ssi
M.U.T.C.D.:: 2023 Edition

103

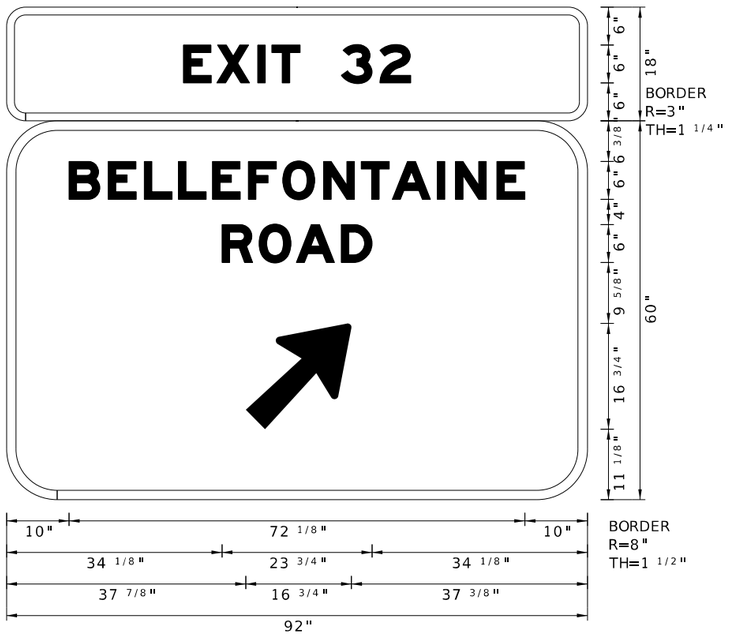

Panel Style: guide_fwy_gore.ssi
M.U.T.C.D.:: 2023 Edition

102

TEMPORARY TRAFFIC CONTROL
DETAIL SHEET 2 OF 2

STATE OF MISSOURI
JONATHAN R. LOOS
NUMBER
PE 2017030326
PROFESSIONAL ENGINEER

DATE PREPARED	3/20/2026
ROUTE	I-270
STATE	MO
DISTRICT	STL
SHEET NO.	76
COUNTY	ST. LOUIS
JOB NO.	JSL0021
CONTRACT ID.	.
PROJECT NO.	.
BRIDGE NO.	.

DATE	DESCRIPTION
.	.
.	.
.	.
.	.
.	.
.	.
.	.

MISSOURI HIGHWAYS AND TRANSPORTATION COMMISSION

MoDOT

105 WEST CAPITOL
JEFFERSON CITY, MO 65102
1-888-ASK-MODOT (1-888-275-6636)

HORNER SHIFRIN

401 S. 18TH ST., STE. 400 ST. LOUIS, MO 63103
314-531-4321 • FAX 314-531-6966
WWW.HORNERSHIFRIN.COM
DISCIPLINE: PROFESSIONAL ENGINEERING
CERTIFICATE OF AUTHORITY: 000159
EXPIRATION DATE: DECEMBER 31, 2026

IF A SEAL IS PRESENT ON THIS SHEET IT HAS BEEN ELECTRONICALLY SEALED AND DATED.

REV.

...\SL0021 MOT\Custom Sign Details 12:16:06 PM 3/20/2026

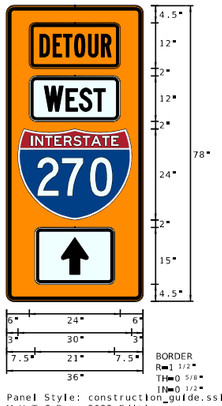

Panel Style: construction_guide.ssl
M.U.T.C.D.:: 2023 Edition

63A

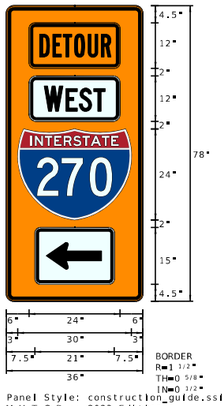

Panel Style: construction_guide.ssl
M.U.T.C.D.:: 2023 Edition

63B



Panel Style: construction_guide.ssl
M.U.T.C.D.:: 2023 Edition

63C



Panel Style: construction_guide.ssl
M.U.T.C.D.:: 2023 Edition

63D



Panel Style: construction_guide.ssl
M.U.T.C.D.:: 2023 Edition

64A



Panel Style: construction_guide.ssl
M.U.T.C.D.:: 2023 Edition

64B



Panel Style: construction_guide.ssl
M.U.T.C.D.:: 2023 Edition

64C



Panel Style: construction_guide.ssl
M.U.T.C.D.:: 2023 Edition

64D

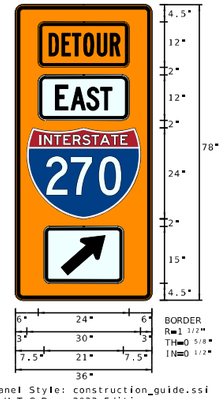

Panel Style: construction_guide.ssl
M.U.T.C.D.:: 2023 Edition

64E

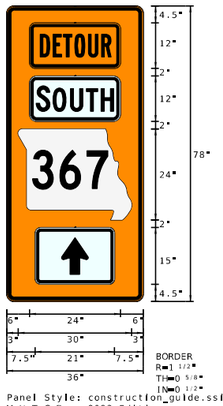

Panel Style: construction_guide.ssl
M.U.T.C.D.:: 2023 Edition

62A

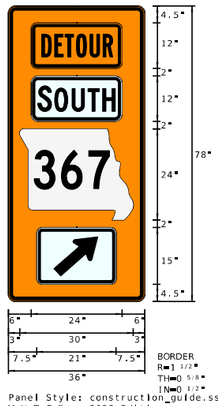

Panel Style: construction_guide.ssl
M.U.T.C.D.:: 2023 Edition

62B

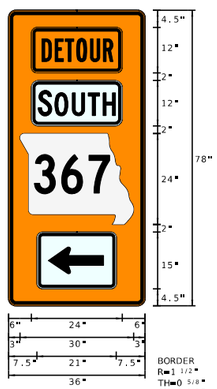

Panel Style: construction_guide.ssl
M.U.T.C.D.:: 2023 Edition

62C

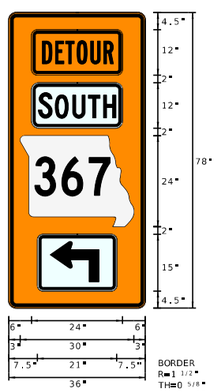

Panel Style: construction_guide.ssl
M.U.T.C.D.:: 2023 Edition

62D



Panel Style: construction_guide.ssl
M.U.T.C.D.:: 2023 Edition

64G

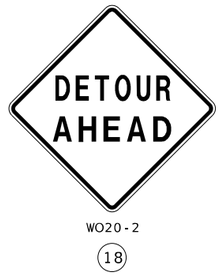

WO20-2

18

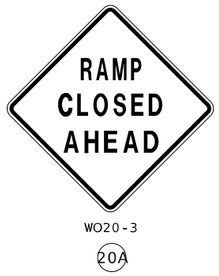

WO20-3

20A



WO20-3

20

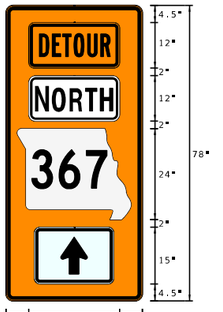

Panel Style: construction_guide.ssl
M.U.T.C.D.:: 2023 Edition

65A

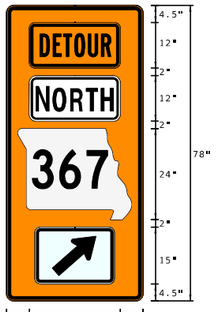

Panel Style: construction_guide.ssl
M.U.T.C.D.:: 2023 Edition

65B

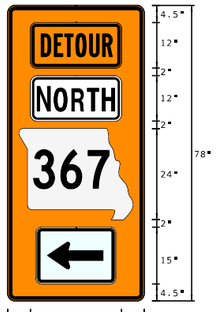

Panel Style: construction_guide.ssl
M.U.T.C.D.:: 2023 Edition

65C

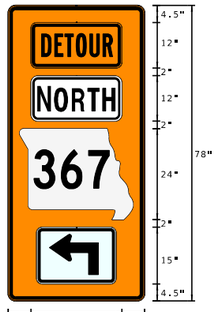

Panel Style: construction_guide.ssl
M.U.T.C.D.:: 2023 Edition

65D

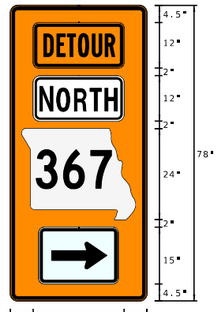

Panel Style: construction_guide.ssl
M.U.T.C.D.:: 2023 Edition

65E

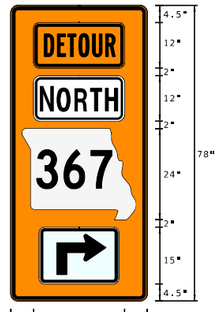

Panel Style: construction_guide.ssl
M.U.T.C.D.:: 2023 Edition

65F



R11-2

29



E05-2a

30



MO4-8a

52

TEMPORARY TRAFFIC CONTROL
DETOUR SIGN LEGEND
DETOUR SHEET 1 OF 10

STATE OF MISSOURI
JONATHAN R. LOOS NUMBER PE-2010020226
PROFESSIONAL ENGINEER

DATE PREPARED
3/20/2026

ROUTE	STATE
I-270	MO
DISTRICT	SHEET NO.
STL	77

COUNTY
ST. LOUIS

JOB NO.
JSL0021

CONTRACT ID.
.

PROJECT NO.
.

BRIDGE NO.
.

IF A SEAL IS PRESENT ON THIS SHEET IT HAS BEEN ELECTRONICALLY SEALED AND DATED.

DATE	DESCRIPTION	REV.
.	.	.

MISSOURI HIGHWAYS AND TRANSPORTATION COMMISSION
105 WEST CAPITOL
JEFFERSON CITY, MO 65102
1-888-ASK-MODOT (1-888-275-6636)

HORNER SHIFRIN
401 S. 18TH ST., STE. 400 ST. LOUIS, MO 63103
314.241.1976 FAX 314.241.1505
WWW.HORNERSHIFRIN.COM
DISCIPLINE: PROFESSIONAL ENGINEERING
CERTIFICATE OF AUTHORITY: 000159
EXPIRATION DATE: DECEMBER 31, 2026

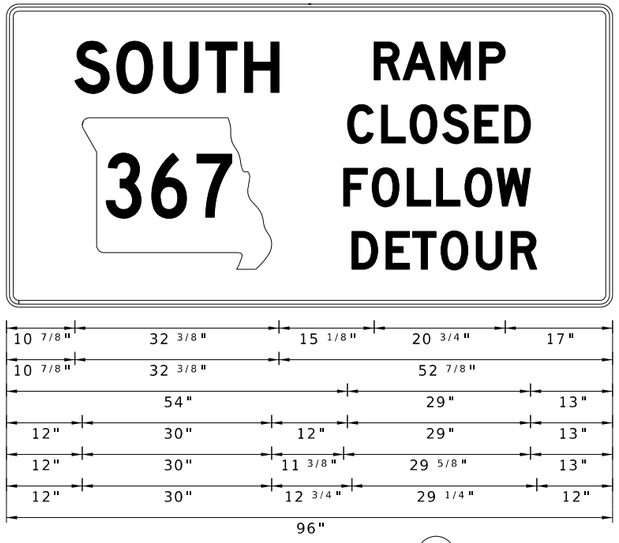

Panel Style: construction_guide.ssi
M.U.T.C.D.:: 2023 Edition

104

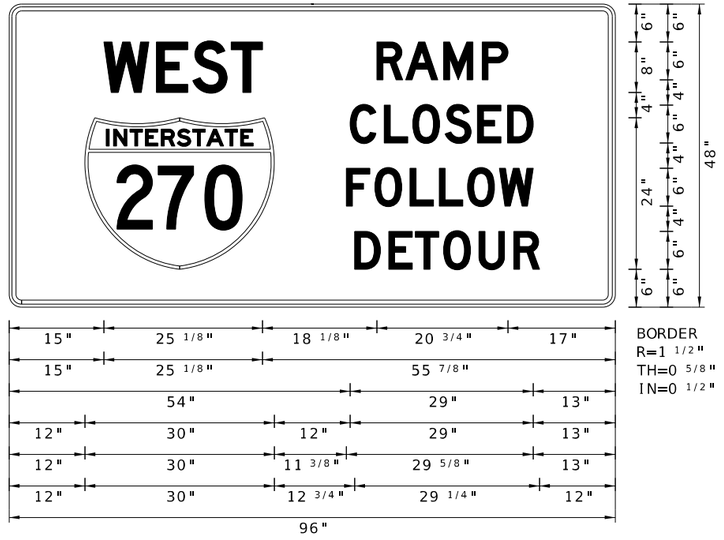

Panel Style: construction_guide.ssi
M.U.T.C.D.:: 2023 Edition

106

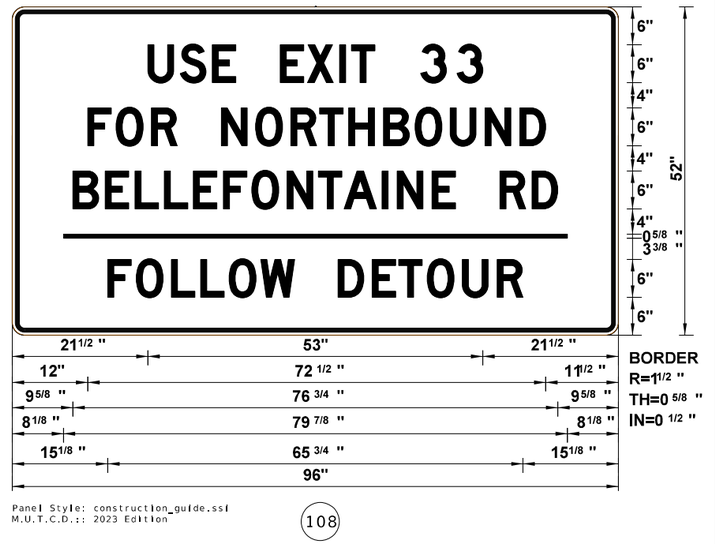

Panel Style: construction_guide.ssi
M.U.T.C.D.:: 2023 Edition

108

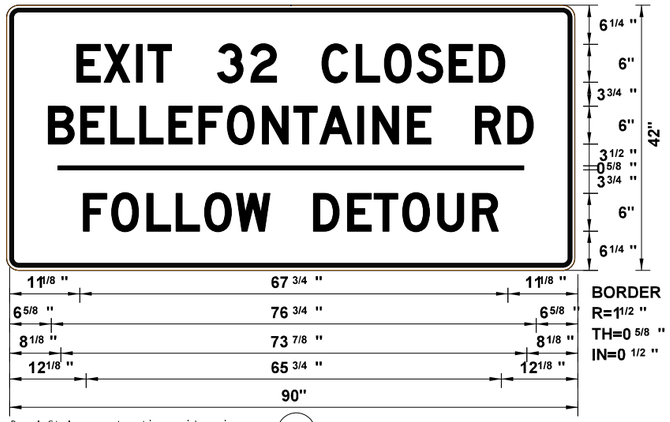

Panel Style: construction_guide.ssi
M.U.T.C.D.:: 2023 Edition

105

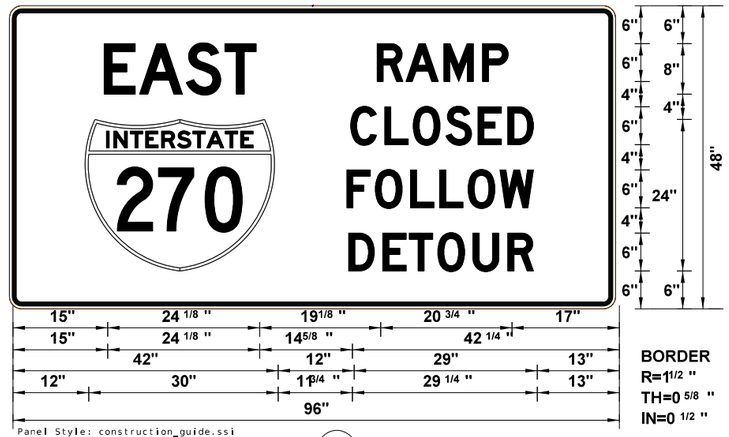

Panel Style: construction_guide.ssi
M.U.T.C.D.:: 2023 Edition

107

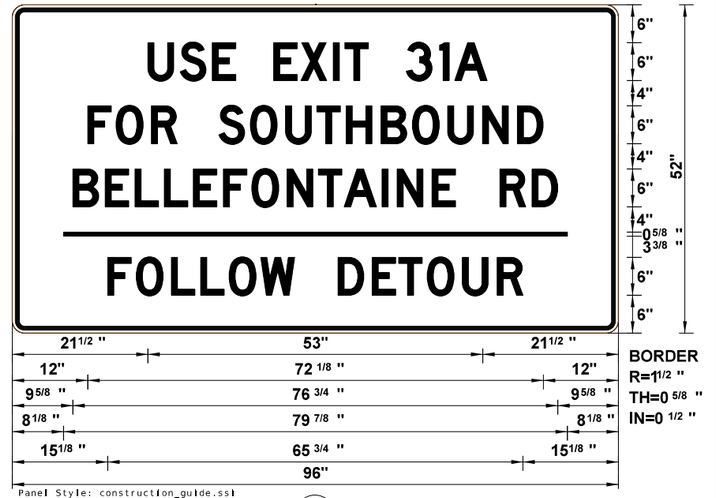

Panel Style: construction_guide.ssi
M.U.T.C.D.:: 2023 Edition

109

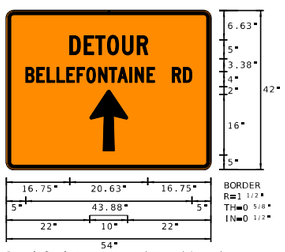

Panel Style: construction_guide.ssi
M.U.T.C.D.:: 2023 Edition

61A

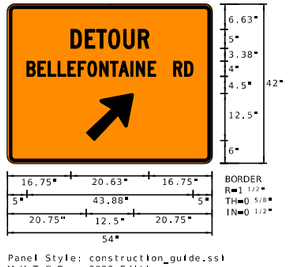

Panel Style: construction_guide.ssi
M.U.T.C.D.:: 2023 Edition

61B

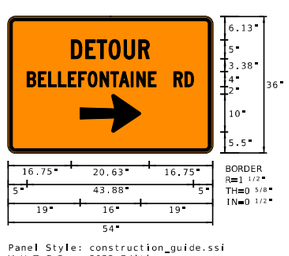

Panel Style: construction_guide.ssi
M.U.T.C.D.:: 2023 Edition

61C

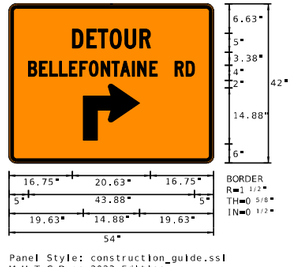

Panel Style: construction_guide.ssi
M.U.T.C.D.:: 2023 Edition

61D

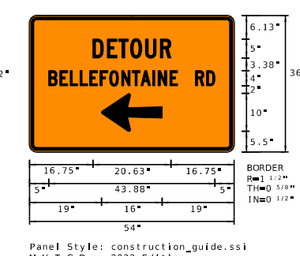

Panel Style: construction_guide.ssi
M.U.T.C.D.:: 2023 Edition

61E

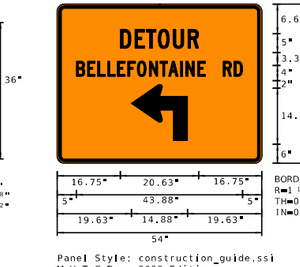

Panel Style: construction_guide.ssi
M.U.T.C.D.:: 2023 Edition

61F

TEMPORARY TRAFFIC CONTROL
DETOUR SIGN LEGEND
DETOUR SHEET 2 OF 10

STATE OF MISSOURI
JONATHAN R. LOOS NUMBER PE-2010020226
PROFESSIONAL ENGINEER

DATE PREPARED 3/20/2026
ROUTE I-270 | STATE MO
DISTRICT STL | SHEET NO. 7-8
COUNTY ST. LOUIS
JOB NO. JSL0021
CONTRACT ID. .
PROJECT NO. .
BRIDGE NO. .

DESCRIPTION | DATE

MISSOURI HIGHWAYS AND TRANSPORTATION COMMISSION
105 WEST CAPITOL
JEFFERSON CITY, MO 65102
1-888-ASK-MODOT (1-888-275-6636)

HORNER SHIFRIN
401 S. 18TH ST., STE. 400 ST. LOUIS, MO 63103
314-241-1976 FAX 314-241-1966
WWW.HORNERSHIFRIN.COM
DISCIPLINE: PROFESSIONAL ENGINEERING
CERTIFICATE OF AUTHORITY: 000159
EXPIRATION DATE: DECEMBER 31, 2026

IF A SEAL IS PRESENT ON THIS SHEET IT HAS BEEN ELECTRONICALLY SEALED AND DATED.

REV.

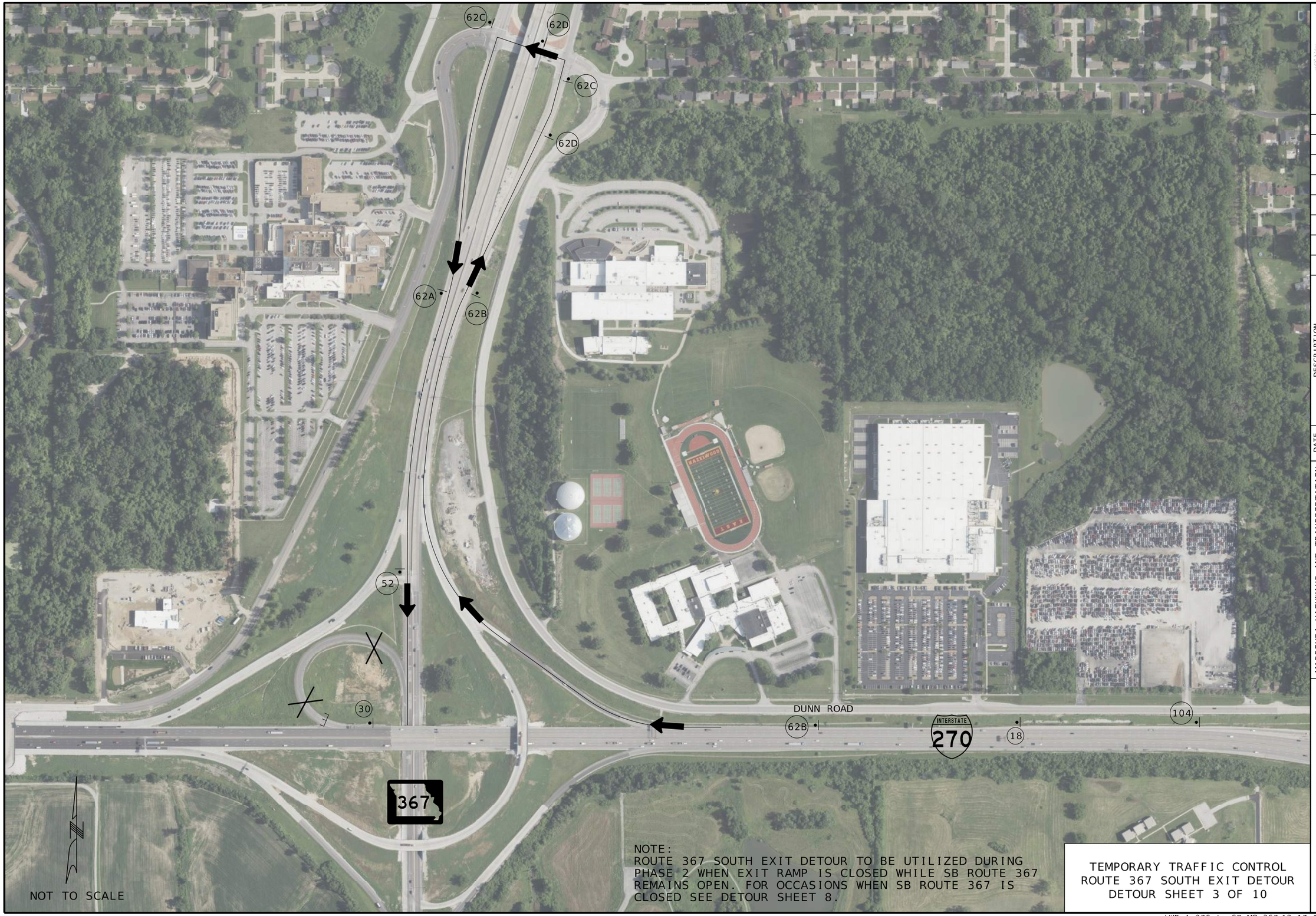

NOTE:
ROUTE 367 SOUTH EXIT DETOUR TO BE UTILIZED DURING PHASE 2 WHEN EXIT RAMP IS CLOSED WHILE SB ROUTE 367 REMAINS OPEN. FOR OCCASIONS WHEN SB ROUTE 367 IS CLOSED SEE DETOUR SHEET 8.

TEMPORARY TRAFFIC CONTROL
ROUTE 367 SOUTH EXIT DETOUR
DETOUR SHEET 3 OF 10

STATE OF MISSOURI
JONATHAN R. LOOS
NUMBER
PE 2017000326
PROFESSIONAL ENGINEER

DATE PREPARED	3/20/2026
ROUTE	I-270
STATE	MO
DISTRICT	STL
SHEET NO.	79
COUNTY	ST. LOUIS
JOB NO.	JSL0021
CONTRACT ID.	.
PROJECT NO.	.
BRIDGE NO.	.

DATE	DESCRIPTION
.	.
.	.
.	.
.	.
.	.
.	.

IF A SEAL IS PRESENT ON THIS SHEET IT HAS BEEN ELECTRONICALLY SEALED AND DATED.

MISSOURI HIGHWAYS AND TRANSPORTATION COMMISSION
MoDOT
105 WEST CAPITOL
JEFFERSON CITY, MO 65102
1-888-ASK-MODOT (1-888-275-6636)

HORNER SHIFRIN
401 S. 18TH ST., STE. 400 ST. LOUIS, MO 63103
314-531-4321 - FAX 314-531-6966
WWW.HORNERSHIFRIN.COM
DISCIPLINE: PROFESSIONAL ENGINEERING
CERTIFICATE OF AUTHORITY: 000159
EXPIRATION DATE: DECEMBER 31, 2026

...\WB I-270 to SB MO 367 12:17:19 PM 3/20/2026



NOTE:
BELLEFONTAINE EXIT DETOUR TO BE UTILIZED DURING PHASE 2.

TEMPORARY TRAFFIC CONTROL
BELLEFONTAINE ROAD EXIT DETOUR
DETOUR SHEET 4 OF 10

STATE OF MISSOURI
JONATHAN R. LOOS
NUMBER PE-2010020326
PROFESSIONAL ENGINEER

DATE PREPARED
3/23/2026

ROUTE	STATE
I-270	MO
DISTRICT	SHEET NO.
STL	80

COUNTY
ST. LOUIS

JOB NO.
JSL0021

CONTRACT ID.
.

PROJECT NO.
.

BRIDGE NO.
.

DESCRIPTION	DATE
.	.
.	.
.	.
.	.
.	.
.	.
.	.
.	.

IF A SEAL IS PRESENT ON THIS SHEET IT HAS BEEN ELECTRONICALLY SEALED AND DATED.

MISSOURI HIGHWAYS AND TRANSPORTATION COMMISSION

MoDOT

105 WEST CAPITOL
JEFFERSON CITY, MO 65102
1-888-ASK-MODOT (1-888-275-6636)

HORNER SHIFRIN
401 S. 18TH ST., STE. 400 ST. LOUIS, MO 63103
314-241-1976 FAX: 314-241-1406
WWW.HORNERSHIFRIN.COM
DISCIPLINE: PROFESSIONAL ENGINEERING
CERTIFICATE OF AUTHORITY: 000159
EXPIRATION DATE: DECEMBER 31, 2026

...\WB I-270 to Bellefontaine Rd 2:47:20 PM 3/23/2026



NOTE:
I-270 WEST ENTRANCE DETOUR APPLICABLE TO PHASES 1A, 1B, & 2 WHILE WEST ENTRANCE FROM ROUNDABOUT REMAINS CLOSED.

TEMPORARY TRAFFIC CONTROL
I-270 WEST ENTRANCE DETOUR
DETOUR SHEET 5 OF 10

STATE OF MISSOURI
JONATHAN R. LOOS
NUMBER
PE 2017000326
PROFESSIONAL ENGINEER

DATE PREPARED	3/20/2026
ROUTE	I-270
STATE	MO
DISTRICT	STL
SHEET NO.	81
COUNTY	ST. LOUIS
JOB NO.	JSL0021
CONTRACT ID.	.
PROJECT NO.	.
BRIDGE NO.	.

DATE	DESCRIPTION
.	.
.	.
.	.
.	.
.	.
.	.

IF A SEAL IS PRESENT ON THIS SHEET IT HAS BEEN ELECTRONICALLY SEALED AND DATED.

MISSOURI HIGHWAYS AND TRANSPORTATION COMMISSION

MoDOT

105 WEST CAPITOL
JEFFERSON CITY, MO 65102
1-888-ASK-MODOT (1-888-275-6636)

HORNER SHIFRIN

401 S. 18TH ST., STE. 400 ST. LOUIS, MO 63103
314-531-4321 - FAX 314-531-6966
WWW.HORNERSHIFRIN.COM
DISCIPLINE: PROFESSIONAL ENGINEERING
CERTIFICATE OF AUTHORITY: 000159
EXPIRATION DATE: DECEMBER 31, 2026

...\Detour Bellefontaine Rd Roundabout to WB I-270 12:19:42 PM 3/20/2026



TEMPORARY TRAFFIC CONTROL
EASTBOUND I-270 ENTRANCE
RAMP FROM 367 DETOUR
SHEET 6 OF 10

STATE OF MISSOURI
JONATHAN R. LOOS NUMBER PE-2010020326
PROFESSIONAL ENGINEER

DATE PREPARED
3/20/2026

ROUTE	STATE
I-270	MO
DISTRICT	SHEET NO.
STL	82

COUNTY
ST. LOUIS

JOB NO.
JSL0021

CONTRACT ID.
.

PROJECT NO.
.

BRIDGE NO.
.

DESCRIPTION	DATE
.	.
.	.
.	.
.	.
.	.
.	.
.	.

IF A SEAL IS PRESENT ON THIS SHEET IT HAS BEEN ELECTRONICALLY SEALED AND DATED.

MISSOURI HIGHWAYS AND TRANSPORTATION COMMISSION

MoDOT

105 WEST CAPITOL
JEFFERSON CITY, MO 65102
1-888-ASK-MODOT (1-888-275-6636)

HORNER SHIFRIN

401 S. 18TH ST., STE. 400 ST. LOUIS, MO 63103
314-241-1976 FAX 314-241-1406
WWW.HORNERSHIFRIN.COM
DISCIPLINE: PROFESSIONAL ENGINEERING
CERTIFICATE OF AUTHORITY: 000159
EXPIRATION DATE: DECEMBER 31, 2026

...\EB I-270 Entrance Ramp Closure 12:20:58 PM 3/20/2026



NOTE:
NORTHBOUND ROUTE 367 DETOUR TO BE UTILIZED DURING PORTIONS OF PHASES 1A AND 2 WHEN I-270 BRIDGE WORK REQUIRES A CLOSURE OF ROUTE 367.

TEMPORARY TRAFFIC CONTROL
NORTHBOUND 367 CLOSURE FOR
PHASED 1-270 BRIDGE DEMO
SHEET 7 OF 10

STATE OF MISSOURI
JONATHAN R. LOOS
NUMBER
PE 2017000326
PROFESSIONAL ENGINEER

DATE PREPARED	3/20/2026
ROUTE	I-270
STATE	MO
DISTRICT	STL
SHEET NO.	83
COUNTY	ST. LOUIS
JOB NO.	JSL0021
CONTRACT ID.	.
PROJECT NO.	.
BRIDGE NO.	.

DATE	DESCRIPTION
.	.
.	.
.	.
.	.
.	.
.	.

IF A SEAL IS PRESENT ON THIS SHEET IT HAS BEEN ELECTRONICALLY SEALED AND DATED.

MISSOURI HIGHWAYS AND TRANSPORTATION COMMISSION

MoDOT

105 WEST CAPITOL
JEFFERSON CITY, MO 65102
1-888-ASK-MODOT (1-888-275-6636)

HORNER SHIFRIN

401 S. 18TH ST., STE. 400 ST. LOUIS, MO 63103
314-531-4321 - FAX 314-531-6966
WWW.HORNERSHIFRIN.COM
DISCIPLINE: PROFESSIONAL ENGINEERING
CERTIFICATE OF AUTHORITY: 000159
EXPIRATION DATE: DECEMBER 31, 2026

...\NB 367 Closure for Phased I-270 Bridge demo 12:22:19 PM 3/20/2026



NOTE:
SOUTHBOUND ROUTE 367 CLOSURE DETOUR TO BE UTILIZED DURING THE PORTIONS OF PHASES 1A AND 2 WHEN THE I-270 BRIDGE WORK REQUIRES A CLOSRE OF ROUTE 367.

TEMPORARY TRAFFIC CONTROL
SOUTHBOUND 367 CLOSURE FOR
PHASED I-270 BRIDGE DEMO
DETOUR SHEET 8 OF 10

STATE OF MISSOURI
JONATHAN R. LOOS
NUMBER
PE 2017000326
PROFESSIONAL ENGINEER

DATE PREPARED	3/20/2026
ROUTE	I-270
STATE	MO
DISTRICT	STL
SHEET NO.	84
COUNTY	ST. LOUIS
JOB NO.	JSL0021
CONTRACT ID.	.
PROJECT NO.	.
BRIDGE NO.	.

DATE	DESCRIPTION
.	.
.	.
.	.
.	.
.	.
.	.

IF A SEAL IS PRESENT ON THIS SHEET IT HAS BEEN ELECTRONICALLY SEALED AND DATED.

MISSOURI HIGHWAYS AND TRANSPORTATION COMMISSION

MoDOT

105 WEST CAPITOL
JEFFERSON CITY, MO 65102
1-888-ASK-MODOT (1-888-275-6636)

HORNER SHIFRIN

401 S. 18TH ST., STE. 400 ST. LOUIS, MO 63103
314-531-4321 - FAX 314-531-6966
WWW.HORNERSHIFRIN.COM
DISCIPLINE: PROFESSIONAL ENGINEERING
CERTIFICATE OF AUTHORITY: 000159
EXPIRATION DATE: DECEMBER 31, 2026

...\SB 367 Closure for Phased I-270 Bridge demo 12:23:37 PM 3/20/2026

NOTE TO SCALE

LARIMORE ROAD

DUNN ROAD

BELLEFONTAINE ROAD

LILAC AVE

INTERSTATE 270

108 29 52 61C 61D 29 61C 61D 18 20 61B 61E 61F 61A 61F 61E

NOTE:
DETOUR FOR NORTHBOUND BELLEFONTAINE CLOSURE TO BE USED DURING PORTIONS OF PHASES 1A AND 2 THAT REQUIRE BELLEFONTAINE TO BE CLOSED.

TEMPORARY TRAFFIC CONTROL
NORTHBOUND BELLEFONTAINE CLOSURE
FOR PHASED I-270 BRIDGE DEMO
DETOUR SHEET 9 OF 10

STATE OF MISSOURI
JONATHAN R. LOOS NUMBER PE-2010020326
PROFESSIONAL ENGINEER

DATE PREPARED: 3/20/2026

ROUTE	STATE
I-270	MO

DISTRICT	SHEET NO.
STL	85

COUNTY: ST. LOUIS

JOB NO.: JSL0021

CONTRACT ID.: .

PROJECT NO.: .

BRIDGE NO.: .

DESCRIPTION	DATE
.	.

IF A SEAL IS PRESENT ON THIS SHEET IT HAS BEEN ELECTRONICALLY SEALED AND DATED.

MISSOURI HIGHWAYS AND TRANSPORTATION COMMISSION

105 WEST CAPITOL
JEFFERSON CITY, MO 65102
1-888-ASK-MODOT (1-888-275-6636)

HORNER SHIFRIN

401 S. 18TH ST., STE. 400 ST. LOUIS, MO 63103
314.241.1976 FAX 314.241.1988
WWW.HORNERSHIFRIN.COM
DISCIPLINE: PROFESSIONAL ENGINEERING
CERTIFICATE OF AUTHORITY: 000159
EXPIRATION DATE: DECEMBER 31, 2026

...\NB Bellefontaine for Phase I-270 Bridge Demo 12:24:59 PM 3/20/2026



NOTE:
DETOUR FOR SOUTHBOUND BELLEFONTAINE CLOSURE TO BE USED DURING PORTIONS OF PHASES 1A AND 2 THAT REQUIRE BELLEFONTAINE ROAD TO BE CLOSED AT I-270.

TEMPORARY TRAFFIC CONTROL
SOUTHBOUND BELLEFONTAINE FOR
PHASED I-270 BRIDGE DEMO
SHEET 10 OF 10

STATE OF MISSOURI
JONATHAN R. LOOS
NUMBER
PE 2017000326
PROFESSIONAL ENGINEER

DATE PREPARED	3/20/2026
ROUTE	I-270
STATE	MO
DISTRICT	STL
SHEET NO.	86
COUNTY	ST. LOUIS
JOB NO.	JSL0021
CONTRACT ID.	.
PROJECT NO.	.
BRIDGE NO.	.

DATE	DESCRIPTION
.	.
.	.
.	.
.	.
.	.
.	.

IF A SEAL IS PRESENT ON THIS SHEET IT HAS BEEN ELECTRONICALLY SEALED AND DATED.

MISSOURI HIGHWAYS AND TRANSPORTATION COMMISSION

MoDOT

105 WEST CAPITOL
JEFFERSON CITY, MO 65102
1-888-ASK-MODOT (1-888-275-6636)

HORNER SHIFRIN

401 S. 18TH ST., STE. 400 ST. LOUIS, MO 63103
314-531-4321 - FAX 314-531-6966
WWW.HORNERSHIFRIN.COM
DISCIPLINE: PROFESSIONAL ENGINEERING
CERTIFICATE OF AUTHORITY: 000159
EXPIRATION DATE: DECEMBER 31, 2026

© 2026 Horner Corporation Inc. All Rights Reserved. CNSS 2026 Design Plan Set Ver. 1.0

...\SB Bellefontaine for Phase I-270 Bridge Demo 12:26:13 PM 3/20/2026

NOTES:

ALL DEVICES SHALL COMPLY WITH THE MUTCD, 11TH EDITION.

CONCRETE BARRIER MAY BE INSTALLED AT AN 8:1 FLARE RATE FROM THE SHOULDER POINT TO THE LIMITS OF THE CLEAR ZONE WHERE THE SIDE SLOPE IS 6:1 OR FLATTER.

FINAL SIGN AND DEVICE LOCATIONS WILL BE FIELD VERIFIED AND MAY BE ADJUSTED ACCORDING TO FIELD CONDITIONS.

TAPER LENGTHS AND SPACING OF CHANNELIZING DEVICES

SPEED (P) MPH	MINIMUM TAPER LENGTHS (L) FOR LANE WIDTHS (W)			MINIMUM SHOULDER TAPER LENGTH BASED ON 10' SHOULDER (T1)	MAXIMUM CHANNELIZER SPACING	
	10 FT	11 FT	12 FT		TAPERS	BUFFER/ WORK AREA
0-35	205 FT	225 FT	245 FT	70	35 FT	40 FT
40-45	450 FT	495 FT	540 FT	150	40 FT	80 FT
50-55	550 FT	605 FT	660 FT	185	50 FT	80 FT
60-70	700 FT	770 FT	840 FT	235	60 FT	120 FT

SIGN SPACING FOR ADVANCE SIGN SERIES (1) (2)

SPEED (P) MPH	NON-DIVIDED HIGHWAYS (S)	DIVIDED HIGHWAYS (S)
0-35	200 FT	200 FT
40-45	350 FT	500 FT
50-55	500 FT	1000 FT
60-70	SA-1000 FT, SB-1500 FT, SC-2640 FT **	

(1) SPACING BETWEEN SIGNS AND SPACING BETWEEN LAST SIGN AND FLAGGER, BEGINNING OF TAPER, OR SIGNED CONDITION

(2) SPACINGS MAY BE ADJUSTED AS NECESSARY TO MEET FIELD CONDITIONS

LONGITUDINAL BUFFER SPACE

SPEED (P) MPH	BUFFER SPACE (FEET)
0-35	280
40-45	400
50-55	560
60-70	840

TAPER LENGTH (L)

L = W X P FOR 40 MPH OR MORE

$L = \frac{WP^2}{60}$ FOR 35 MPH OR LESS

L = TAPER LENGTH IN FEET

W = LATERAL SHIFT IN FEET

P = POSTED SPEED PRIOR TO ROAD WORK IN MPH

NOT TO SCALE

STATE OF MISSOURI
JONATHAN R. LOOS
NUMBER
PE 2017000326
PROFESSIONAL ENGINEER

DATE PREPARED 3/20/2026

ROUTE I-270 | STATE MO

DISTRICT STL | SHEET NO. 87

COUNTY ST. LOUIS

JOB NO. JSL0021

CONTRACT ID. .

PROJECT NO. .

BRIDGE NO. .

DATE	DESCRIPTION
.	.
.	.
.	.
.	.
.	.
.	.
.	.

MISSOURI HIGHWAYS AND TRANSPORTATION COMMISSION

MoDOT

105 WEST CAPITOL
JEFFERSON CITY, MO 65102
1-888-ASK-MODOT (1-888-275-6636)

HORNER SHIFRIN

401 S. 18TH ST., STE. 400 ST. LOUIS, MO 63103
314-531-4321 - FAX 314-531-6966
WWW.HORNERSHIFRIN.COM
DISCIPLINE: PROFESSIONAL ENGINEERING
CERTIFICATE OF AUTHORITY: 000159
EXPIRATION DATE: DECEMBER 31, 2026

IF A SEAL IS PRESENT ON THIS SHEET IT HAS BEEN ELECTRONICALLY SEALED AND DATED.

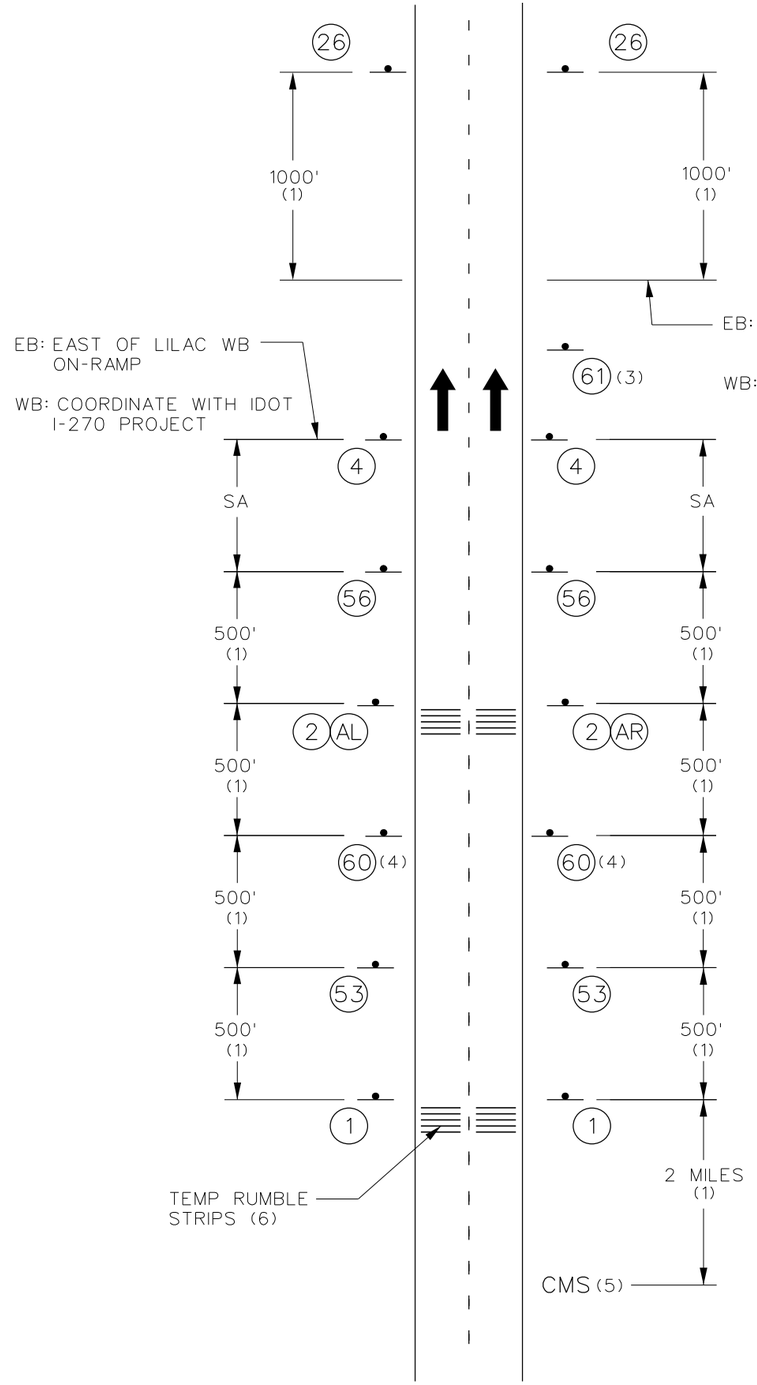

MULTI-LANE DIVIDED
BEGIN/END OF PROJECT SIGNING

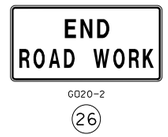

G020-2
26



W020-1
2



CONST-8
60

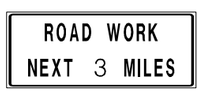

G020-1
1



W03-5
56



R2-1
4



CONST-3A
53



CONST-5-96
61

NOTES:

SIGN 1 IS REQUIRED.

SIGN 26 IS USED ON ALL PROJECTS WHERE SIGN 1 IS USED.

OTHER SIGNS SUCH AS DETOUR OR ALTERNATE ROUTE SIGNING MAY BE USED OUTSIDE THE PROJECT LIMITS.

UNLESS NOTED ON PLANS, ANY EXISTING SIGNING THAT CONFLICTS WITH THE TRAFFIC CONTROL SIGNING SHALL BE COMPLETELY COVERED OR REMOVED.

SIGNS 4 AND 56 TO BE COVERED WHEN CONDITIONS REQUIRING THE REDUCED SPEED NO LONGER EXIST.

(1) DISTANCE MAY BE ADJUSTED ACCORDING TO FIELD CONDITIONS. WHERE TRAFFIC BACKUPS ARE EXPECTED BEYOND THE ADVANCE WARNING AREA, ADDITIONAL SIGNING MAY BE NEEDED.

(3) SIGN CONST-5-96 IS PLACED IN A VISIBLE AREA WITHIN THE PROJECT LIMITS PROVIDED ITS PLACEMENT DOES NOT DISRUPT A SEQUENCE OF SIGNS. IF A VISIBLE LOCATION WITHIN THE PROJECT IS NOT AVAILABLE, THE SIGN MAY BE PLACED 500 FEET BEFORE SIGN CONST-7-72 OR CONST-7-48.

(4) THE "WORK ZONE NO PHONE ZONE" SIGN IS PLACED A MINIMUM OF 500 FEET BEFORE THE ROAD WORK AHEAD SIGN.

(5) CHANGEABLE MESSAGE SIGN SHALL BE CONNECTED TO SMART WORK ZONE TECHNOLOGY.

(6) TEMPORARY RUMBLE STRIPS ARE LONG-TERM WITH FIVE (5) STRIPS SPACED 10 - 12 FT. ON CENTER. FIRST SET IS PLACED 200' IN FRONT OF SIGN 2. SECOND SET IS PLACED 1500' IN FRONT OF SIGN 2.

NOT TO SCALE

STATE OF MISSOURI
JONATHAN R. LOOS NUMBER PE-2010030256
PROFESSIONAL ENGINEER

DATE PREPARED
3/20/2026

ROUTE	STATE
I-270	MO
DISTRICT	SHEET NO.
STL	88

COUNTY
ST. LOUIS

JOB NO.
JSL0021

CONTRACT ID.
.

PROJECT NO.
.

BRIDGE NO.
.

DESCRIPTION	DATE
.	.
.	.
.	.
.	.
.	.
.	.
.	.
.	.

IF A SEAL IS PRESENT ON THIS SHEET IT HAS BEEN ELECTRONICALLY SEALED AND DATED.

MISSOURI HIGHWAYS AND TRANSPORTATION COMMISSION
105 WEST CAPITOL
JEFFERSON CITY, MO 65102
1-888-ASK-MODOT (1-888-275-6636)

HORNER SHIFRIN
401 S. 18TH ST., STE. 400 ST. LOUIS, MO 63103
314-241-1976 FAX 314-241-1988
WWW.HORNERSHIFRIN.COM
DISCIPLINE: PROFESSIONAL ENGINEERING
CERTIFICATE OF AUTHORITY: 000159
EXPIRATION DATE: DECEMBER 31, 2026

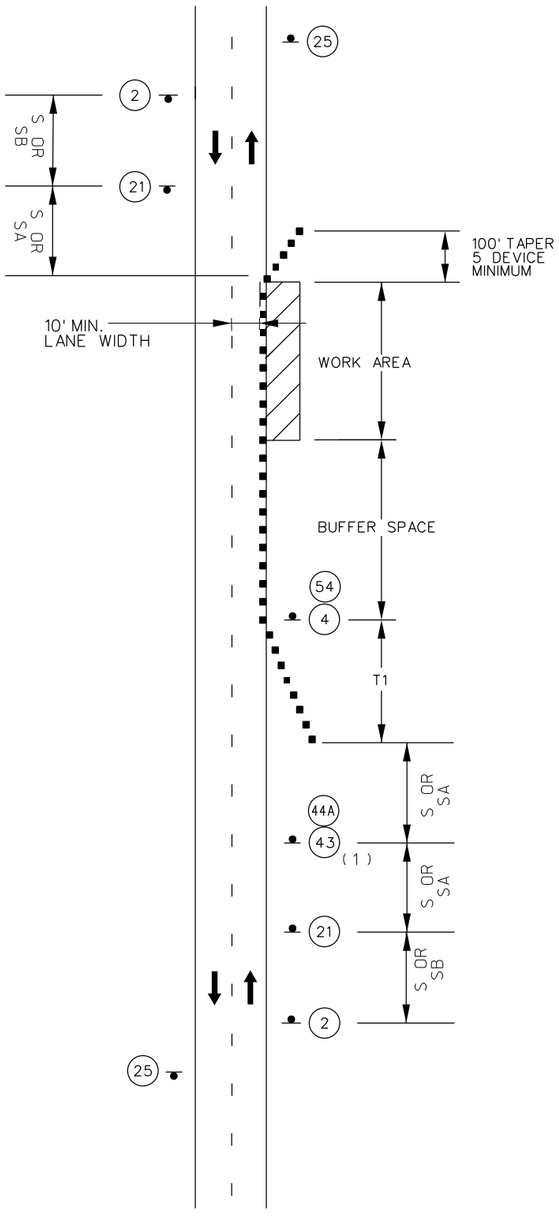

TWO LANE UNDIVIDED
SHOULDER WORK
MINOR TRAVELWAY ENCROACHMENT

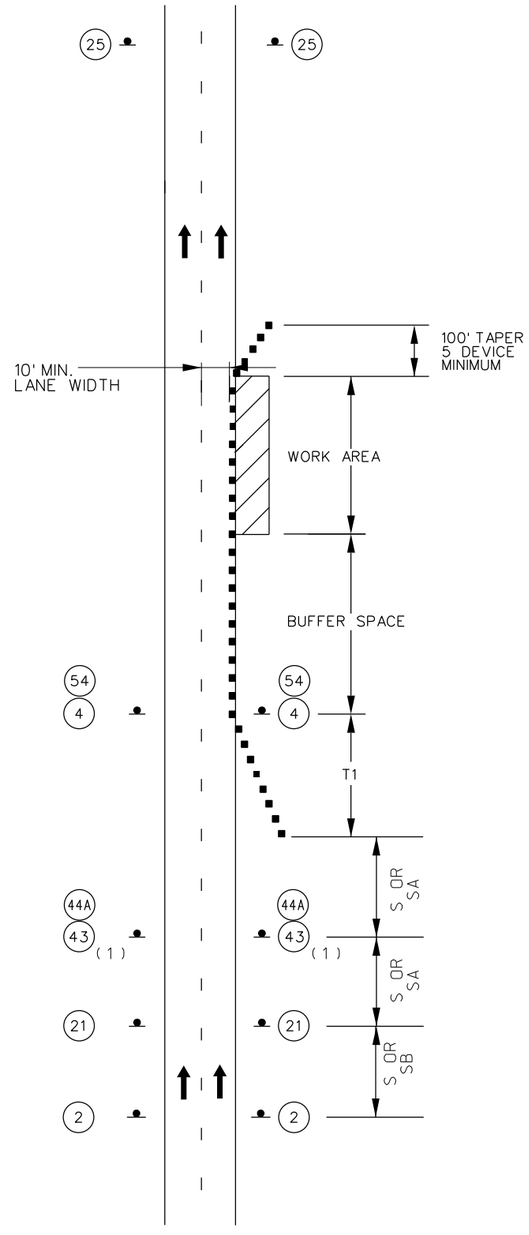

MULTI-LANE DIVIDED
SHOULDER WORK
MINOR TRAVELWAY ENCROACHMENT



W020-1
2



W025-6



W021-5b
21



W05-1
43



W07-3a
44A



R2-1
4



R2-1
NORMAL SPEED
25



G020-5aP
54

CHANNELIZERS

NOTES:

REFER TO SHEET 84 FOR SIGN SPACING, DEVICE SPACING AND CHANNELIZING TAPER LENGTHS.

SIGN 2 NOT REQUIRED IF SHOULDER WORK IS LOCATED WITHIN THE LIMITS OF AN ACTIVITY AREA WHERE ANOTHER SIGN 2 IS ALREADY USED.

THE PROTECTIVE VEHICLE MAY BE OMITTED IF A TAPER AND CHANNELIZING DEVICES ARE USED.

VEHICLE- MOUNTED SIGNS SHALL BE MOUNTED IN A MANNER SUCH THAT THEY ARE NOT OBSCURED BY EQUIPMENT OR SUPPLIES. SIGN LEGEND ON VEHICLE-MOUNTED SIGNS SHALL BE COVERED OR TURNED FROM VIEW WHEN WORK IS NOT IN PROGRESS.

VEHICLE HAZARD WARNING SIGNALS SHALL NOT BE USED INSTEAD OF THE VEHICLE'S HIGH -INTENSITY ROTATING FLASHING, FLASHING, OSCILLATING, OR STROBE LIGHTS.

SHADOW AND WORK VEHICLES SHALL DISPLAY HIGH-DENSITY ROTATING, FLASHING, OSCILLATING, OR STROBE LIGHTS.

(1). SIGN 44A NOT REQUIRED FOR NARROW LANE SECTIONS LESS THAN ONE MILE.

NOT TO SCALE

STATE OF MISSOURI
JONATHAN R. LOOS NUMBER PE-2010035226
PROFESSIONAL ENGINEER

DATE PREPARED
3/20/2026

ROUTE	STATE
I-270	MO
DISTRICT	SHEET NO.
STL	89

COUNTY
ST. LOUIS

JOB NO.
JSL0021

CONTRACT ID.
.

PROJECT NO.
.

BRIDGE NO.
.

DESCRIPTION	DATE
.	.
.	.
.	.
.	.
.	.
.	.
.	.
.	.

IF A SEAL IS PRESENT ON THIS SHEET IT HAS BEEN ELECTRONICALLY SEALED AND DATED.

MISSOURI HIGHWAYS AND TRANSPORTATION COMMISSION
105 WEST CAPITOL
JEFFERSON CITY, MO 65102
1-888-ASK-MODOT (1-888-275-6636)

HORNER SHIFRIN
401 S. 18TH ST., STE. 400 ST. LOUIS, MO 63103
314-241-1976 FAX 314-241-1988
WWW.HORNERSHIFRIN.COM
DISCIPLINE: PROFESSIONAL ENGINEERING
CERTIFICATE OF AUTHORITY: 000159
EXPIRATION DATE: DECEMBER 31, 2026

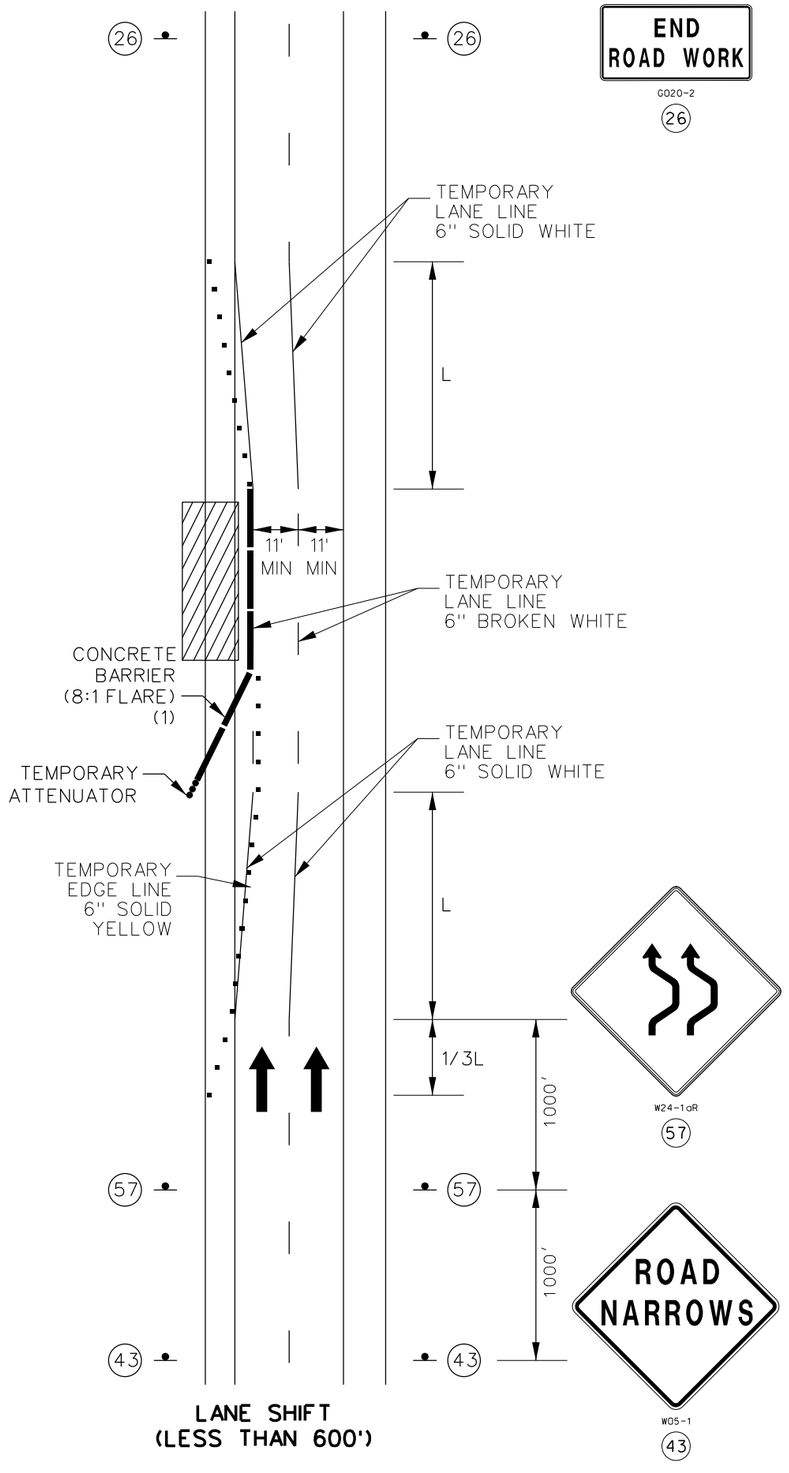

LANE SHIFT
(LESS THAN 600')

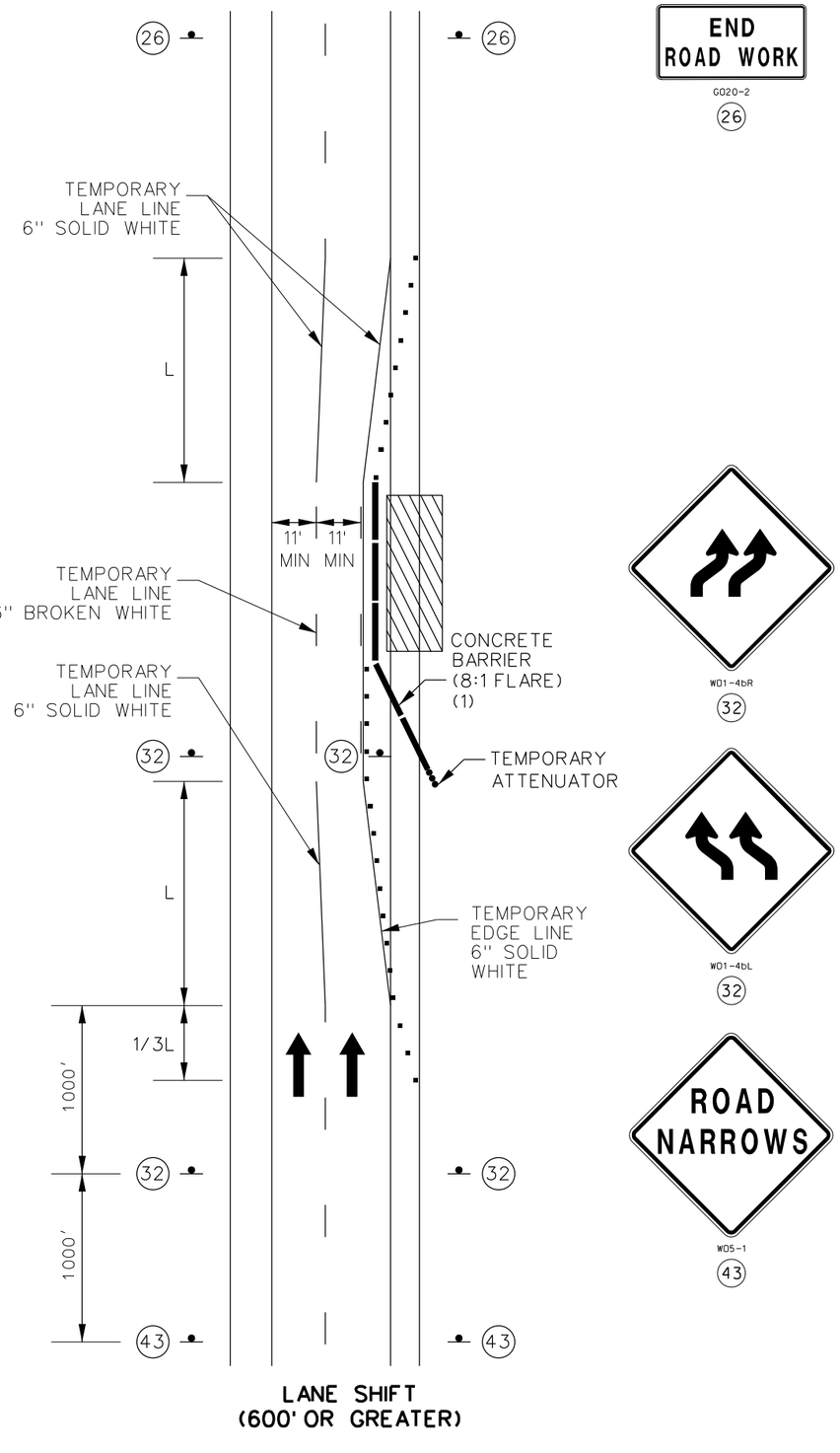

LANE SHIFT
(600' OR GREATER)

NOTES:

EXISTING STRIPING IN CONFLICT WITH TEMPORARY STRIPING SHALL BE REMOVED.

THE NUMBER OF LANES ILLUSTRATED ON THE REVERSE CURVE SIGNS SHALL BE THE SAME AS THE NUMBER OF THROUGH LANES AVAILABLE TO ROAD USERS, AND THE DIRECTION OF THE REVERSE CURVES SHALL BE APPROPRIATELY ILLUSTRATED.

WHERE TWO OR MORE LANES ARE BEING SHIFTED, A W1-4 (OR W1-3) SIGN WITH AN ALL LANES (W24-1cP) PLAQUE MAY BE USED INSTEAD OF A SIGN THAT ILLUSTRATES THE NUMBER OF LANES.

REFER TO SHEET 84 FOR SIGN SPACING, DEVICE SPACING AND CHANNELIZING TAPER LENGTHS.

CHANNELIZERS

NOT TO SCALE

STATE OF MISSOURI
JONATHAN R. LOOS
NUMBER
PE 2017000326
PROFESSIONAL ENGINEER

DATE PREPARED	3/20/2026
ROUTE	I-270
STATE	MO
DISTRICT	STL
SHEET NO.	90
COUNTY	ST. LOUIS
JOB NO.	JSL0021
CONTRACT ID.	.
PROJECT NO.	.
BRIDGE NO.	.

DATE	DESCRIPTION
.	.

MISSOURI HIGHWAYS AND TRANSPORTATION COMMISSION

MoDOT

105 WEST CAPITOL
JEFFERSON CITY, MO 65102
1-888-ASK-MODOT (1-888-275-6636)

HORNER SHIFRIN

401 S. 18TH ST., STE. 400 ST. LOUIS, MO 63103
314-531-4321 - FAX 314-531-6966
WWW.HORNERSHIFRIN.COM
DISCIPLINE: PROFESSIONAL ENGINEERING
CERTIFICATE OF AUTHORITY: 000159
EXPIRATION DATE: DECEMBER 31, 2026

IF A SEAL IS PRESENT ON THIS SHEET IT HAS BEEN ELECTRONICALLY SEALED AND DATED.

...\Typical Applications 1-6 12:27:31 PM 3/20/2026

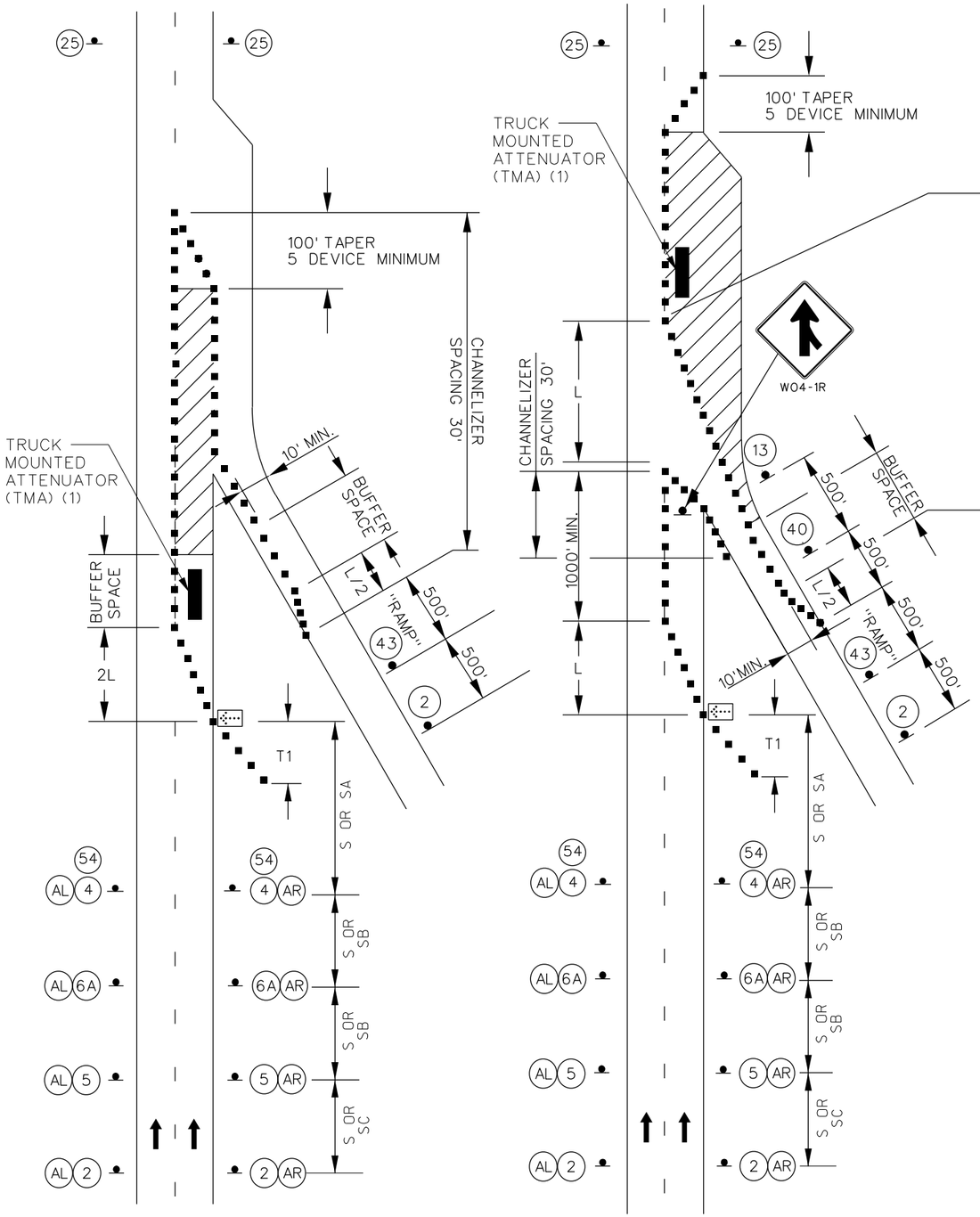

LANE CLOSURE
ENTRANCE RAMP AREAS

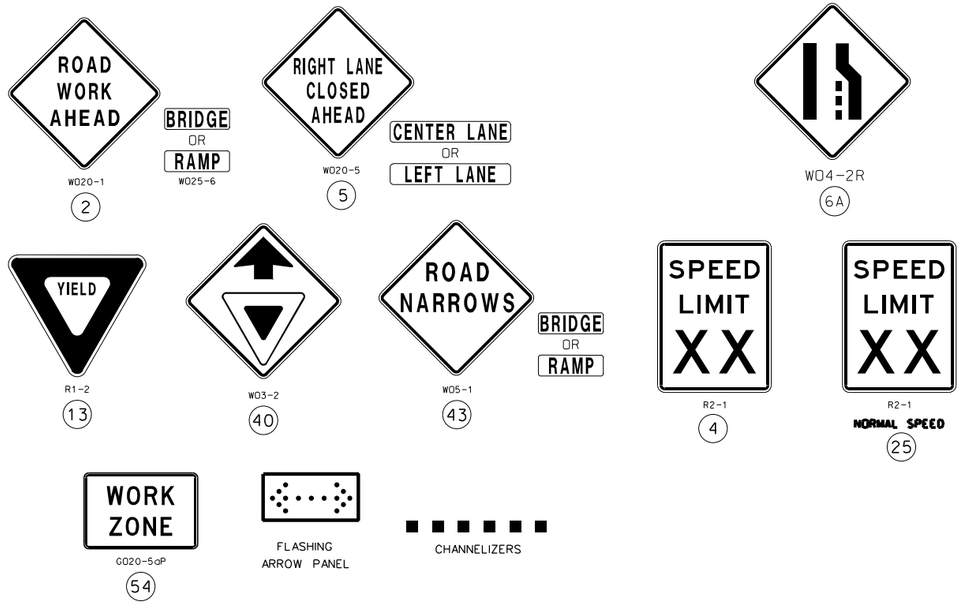

NOTES:

SEE SHEET 84 FOR SIGN SPACING, DEVICE SPACING AND CHANNELIZING TAPER LENGTHS.

SIGN 2 NOT REQUIRED IF SHOULDER WORK IS LOCATED WITHIN THE LIMITS OF AN ACTIVITY AREA WHERE ANOTHER SIGN 2 IS ALREADY USED.

REMOVE AND/OR MODIFY EXISTING PAVEMENT MARKING AS NEEDED.

TEMPORARY PAVEMENT MARKING REQUIRED WITH LONG TERM LANE CLOSURES.

RAMP NARROWS SIGN IS REQUIRED WHEN RAMP WIDTH IS REDUCED.

YIELD SIGN SHOULD BE PLACED ON THE RAMP TO PROVIDE ADEQUATE VISIBILITY OF MAINLINE TRAFFIC. WHERE INADEQUATE ACCELERATION DISTANCE EXISTS FOR THE TEMPORARY ENTRANCE, THE YIELD SIGN SHALL BE REPLACED WITH STOP SIGNS (ONE EACH SIDE OF THE APPROACH).

THE LOCATION OF THE SIGN SEQUENCE AND MERGE TAPER SHOULD BE ADJUSTED SO THAT THE ARROW PANEL LOCATION IS NOT CONFUSING TO MOTORISTS ON THE RAMP.

THE YIELD SIGN SHOULD BE PLACED ON THE RAMP TO PROVIDE ADEQUATE VISIBILITY OF MAINLINE TRAFFIC.

FOR WORK ZONES WHERE DEVICES ARE IN PLACE OVER NIGHT, USE TRIM-LINE CHANNELIZERS.

(1). PROTECTIVE VEHICLE SHALL CONSIST OF TMA WITH WITH FLASHING ARROW PANEL. POSITION TMA AT LEAST 150' IN ADVANCE OF WORK SPACE. TMA LOCATION TO BE MODIFIED PER LOCATION OF CONSTRUCTION ACTIVITIES, IF REQUIRED.

STATE OF MISSOURI
JONATHAN H. LOOS NUMBER PE-2010020326
PROFESSIONAL ENGINEER

DATE PREPARED 5/1/2026
ROUTE I-270 | STATE MO
DISTRICT STL | SHEET NO. 91
COUNTY ST. LOUIS
JOB NO. JSL0021
CONTRACT ID.
PROJECT NO.
BRIDGE NO.

DATE	DESCRIPTION

IF A SEAL IS PRESENT ON THIS SHEET IT HAS BEEN ELECTRONICALLY SEALED AND DATED.

MISSOURI HIGHWAYS AND TRANSPORTATION COMMISSION
105 WEST CAPITOL
JEFFERSON CITY, MO 65102
1-888-ASK-MODOT (1-888-275-6636)

HORNER SHIFRIN
401 S. 18TH ST., STE. 400 ST. LOUIS, MO 63103
314-241-4844 FAX 314-241-4895
WWW.HORNERSHIFRIN.COM
DISCIPLINE: PROFESSIONAL ENGINEERING
CERTIFICATE OF AUTHORITY: 000159
EXPIRATION DATE: DECEMBER 31, 2026

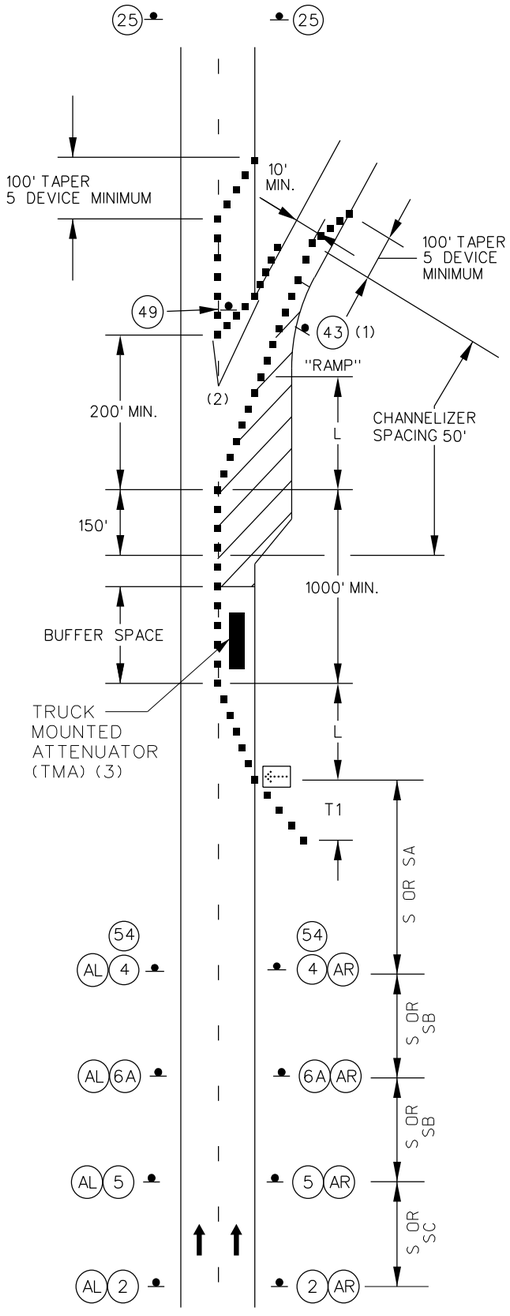

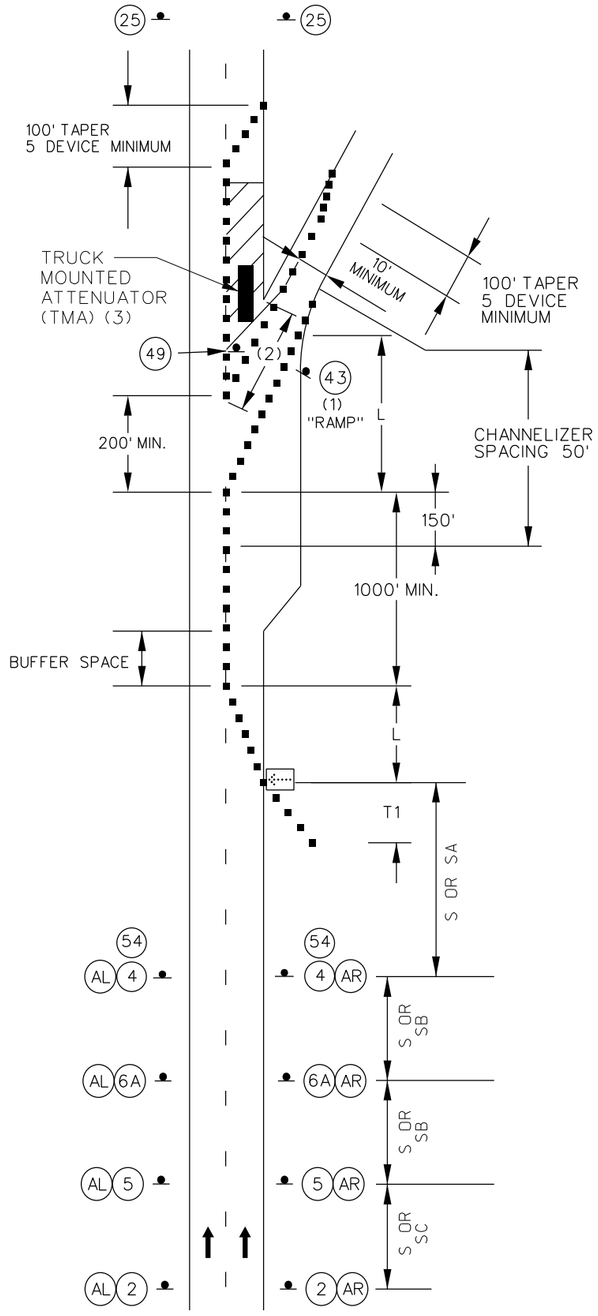

WORK IN THE VICINITY
OF A EXIT RAMP AREAS











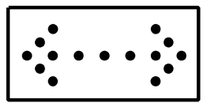















NOTES:

SEE SHEET 84 FOR SIGN SPACING, DEVICE SPACING AND CHANNELIZING TAPER LENGTHS.

SIGN 2 NOT REQUIRED IF SHOULDER WORK IS LOCATED WITHIN THE LIMITS OF AN ACTIVITY AREA WHERE ANOTHER SIGN 2 IS ALREADY USED.

REMOVE AND/OR MODIFY EXISTING PAVEMENT MARKING AS NEEDED.

TEMPORARY PAVEMENT MARKING REQUIRED WITH LONG TERM LANE CLOSURES.

(1). SIGN 43 REQUIRED WHEN RAMP WIDTH IS REDUCED.

(2). FIVE CHANNELIZER DEVICE MINIMUM.

(3). PROTECTIVE VEHICLE SHALL CONSIST OF TMA WITH WITH FLASHING ARROW PANEL. POSITION TMA AT LEAST 150' IN ADVANCE OF WORK SPACE, IF REQUIRED.



DATE PREPARED
5/1/2026

ROUTE	STATE
I-270	MO
DISTRICT	SHEET NO.
STL	92

COUNTY
ST. LOUIS

JOB NO.
JSL0021

CONTRACT ID.
.

PROJECT NO.
.

BRIDGE NO.
.

DATE	DESCRIPTION
.	.
.	.
.	.
.	.
.	.
.	.
.	.
.	.

IF A SEAL IS PRESENT ON THIS SHEET IT HAS BEEN ELECTRONICALLY SEALED AND DATED.

MISSOURI HIGHWAYS AND TRANSPORTATION COMMISSION

105 WEST CAPITOL
JEFFERSON CITY, MO 65102
1-888-ASK-MODOT (1-888-275-6636)

HORNER SHIFRIN
401 S. 18TH ST., STE. 400 ST. LOUIS, MO 63103
314.241.1976 FAX 314.241.1988
WWW.HORNERSHIFRIN.COM
DISCIPLINE: PROFESSIONAL ENGINEERING
CERTIFICATE OF AUTHORITY: 000159
EXPIRATION DATE: DECEMBER 31, 2026

TEMPORARY EROSION CONTROL LEGEND

- (A) ALTERNATE DITCH CHECK
- (C) INLET CHECK
- (R) ROCK DITCH CHECK
- (S) SEDIMENT TRAP
- SILT FENCE

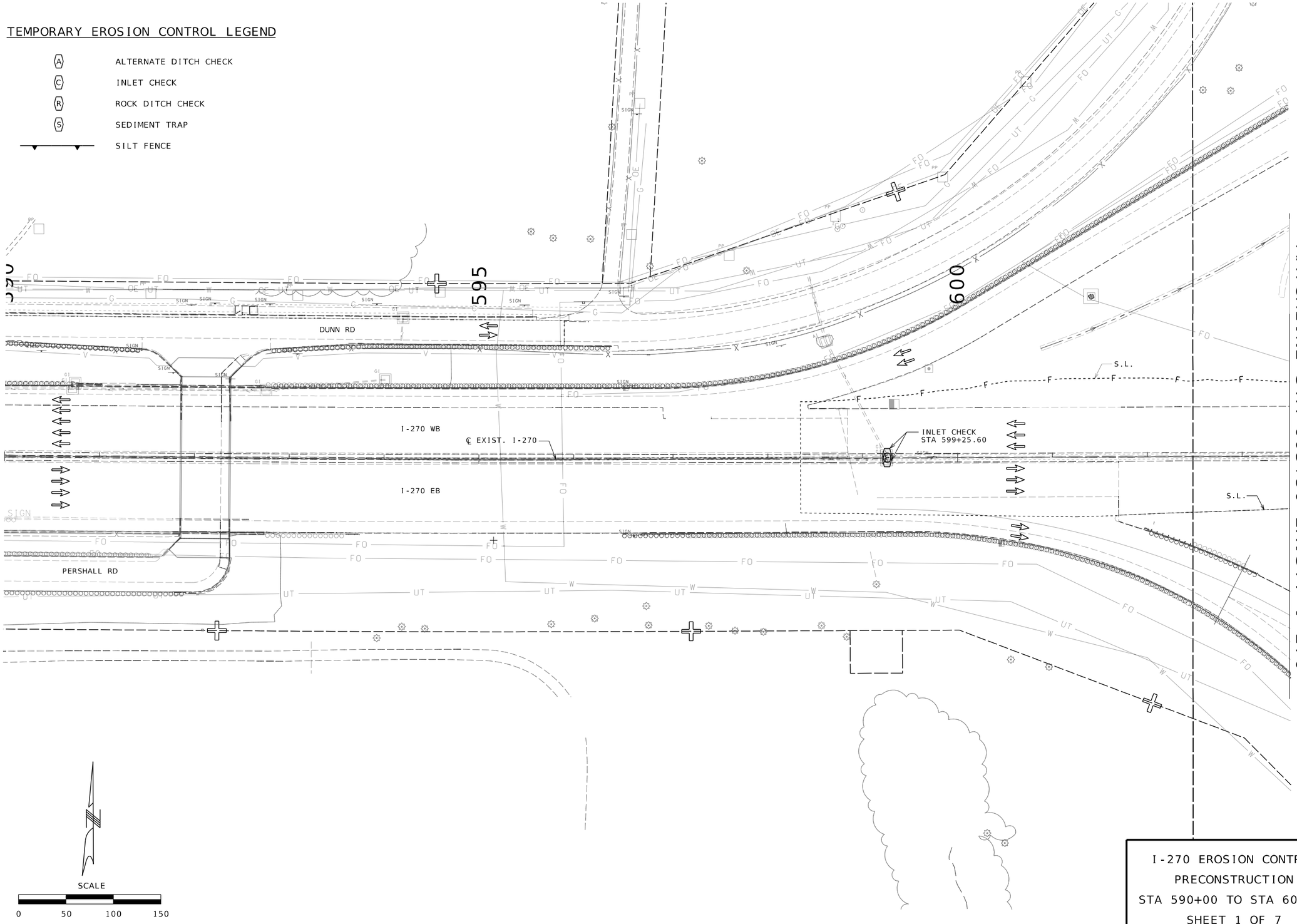

SCALE

0 50 100 150

I-270 EROSION CONTROL
PRECONSTRUCTION
STA 590+00 TO STA 603+50
SHEET 1 OF 7

STATE OF MISSOURI
EUGENE LOUIS KUEKER JR.
NUMBER PE-2011009912
PROFESSIONAL ENGINEER

THIS SHEET HAS BEEN SIGNED, SEALED, AND DATED ELECTRONICALLY.

DATE PREPARED 3/25/2026

ROUTE	STATE
I-270	MO
DISTRICT	SHEET NO.
SL	93

COUNTY: ST. LOUIS
JOB NO.: JSL0021
CONTRACT ID.:
PROJECT NO.:
BRIDGE NO.:

DESCRIPTION	DATE

IF A SEAL IS PRESENT ON THIS SHEET IT HAS BEEN ELECTRONICALLY SEALED AND DATED.

MISSOURI HIGHWAYS AND TRANSPORTATION COMMISSION
105 WEST CAPITOL
JEFFERSON CITY, MO 65102
1-888-ASK-MODOT (1-888-275-6636)

HDR Engineering, Inc.
1001 Highlands Plaza Drive
Suite 200
St. Louis, MO 63110-1337
314-425-8300
Certificate of Authority: 000856

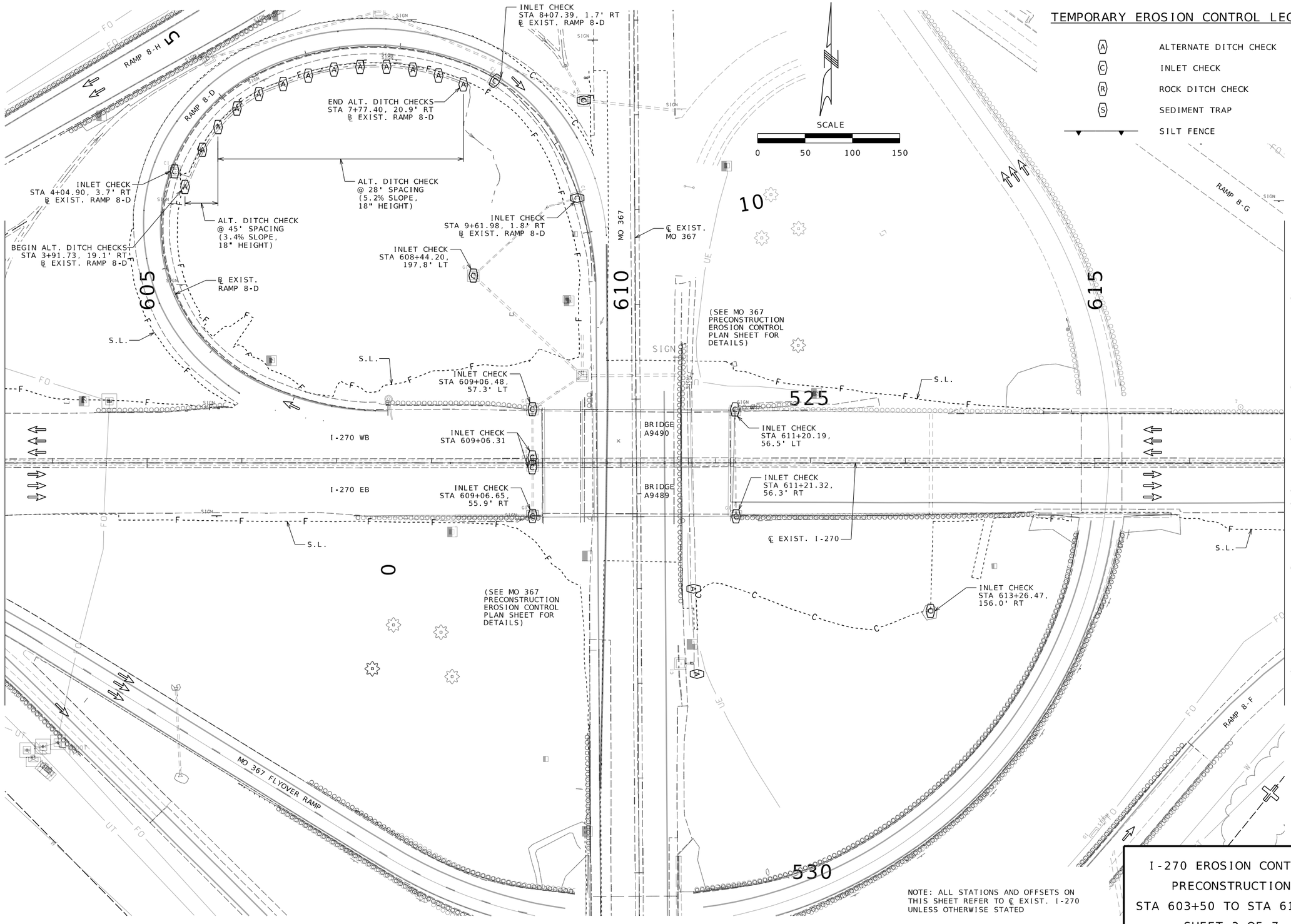

TEMPORARY EROSION CONTROL LEGEND

- (A) ALTERNATE DITCH CHECK
- (C) INLET CHECK
- (R) ROCK DITCH CHECK
- (S) SEDIMENT TRAP
- SILT FENCE

NOTE: ALL STATIONS AND OFFSETS ON THIS SHEET REFER TO ℄ EXIST. I-270 UNLESS OTHERWISE STATED

I-270 EROSION CONTROL PRECONSTRUCTION STA 603+50 TO STA 617+00 SHEET 2 OF 7

STATE OF MISSOURI
EUGENE LOUIS KUEKER JR.
NUMBER PE-2010009912
PROFESSIONAL ENGINEER

THIS SHEET HAS BEEN SIGNED, SEALED, AND DATED ELECTRONICALLY.

IF A SEAL IS PRESENT ON THIS SHEET IT HAS BEEN ELECTRONICALLY SEALED AND DATED.

DATE PREPARED	
3/25/2026	
ROUTE	STATE
I-270	MO
DISTRICT	SHEET NO.
SL	94
COUNTY	
ST. LOUIS	
JOB NO.	
JSL0021	
CONTRACT ID.	
PROJECT NO.	
BRIDGE NO.	

DESCRIPTION	DATE

MISSOURI HIGHWAYS AND TRANSPORTATION COMMISSION
105 WEST CAPITOL
JEFFERSON CITY, MO 65102
1-888-ASK-MODOT (1-888-275-6636)

HDR Engineering, Inc.
1001 Highlands Plaza Drive
Suite 200
St. Louis, MO 63110-1337
314-425-8300
Certificate of Authority: 000856

MATCHLINE STA 617+00 EXIST. I-270

620

625

630

MATCHLINE STA 630+50 EXIST. I-270

DUNN RD

RAMP 8-G

RAMP 8-F

℄ EXIST. I-270

I-270 WB

I-270 EB

S89°54'40"E

S.L.

S.L.

S.L.

TEMPORARY EROSION CONTROL LEGEND

A	ALTERNATE DITCH CHECK
C	INLET CHECK
R	ROCK DITCH CHECK
S	SEDIMENT TRAP
	SILT FENCE

SCALE

0 50 100 150

I-270 EROSION CONTROL PRECONSTRUCTION STA 617+00 TO STA 630+50 SHEET 3 OF 7

STATE OF MISSOURI
EUGENE LOUIS KUEKER JR.
NUMBER PE-2010000912
PROFESSIONAL ENGINEER

THIS SHEET HAS BEEN SIGNED, SEALED, AND DATED ELECTRONICALLY.

IF A SEAL IS PRESENT ON THIS SHEET IT HAS BEEN ELECTRONICALLY SEALED AND DATED.

DATE PREPARED 3/25/2026

ROUTE	STATE
I-270	MO
DISTRICT	SHEET NO.
SL	95

COUNTY: ST. LOUIS

JOB NO.: JSL0021

CONTRACT ID.:

PROJECT NO.:

BRIDGE NO.:

DESCRIPTION	DATE

MISSOURI HIGHWAYS AND TRANSPORTATION COMMISSION
105 WEST CAPITOL
JEFFERSON CITY, MO 65102
1-888-ASK-MODOT (1-888-275-6636)

HDR Engineering, Inc.
1001 Highlands Plaza Drive
Suite 200
St. Louis, MO 63110-1337
314-425-8300
Certificate of Authority: 000856

c:\pwworking\central01\d4324513\090_EC03_JSL0021_I50_I-270.dgn 2:43:33 PM 3/25/2026

MATCHLINE STA 630+50 EXIST. I-270

635

640

DUNN RD

S.L.

℄ EXIST. I-270

I-270 WB

I-270 EB

S.L.

BEGIN ALT. DITCH CHECKS
STA 640+77.32, 59.0' RT

ALT. DITCH CHECK
@ 75' SPACING
(1.0% SLOPE,
18" HEIGHT)

END ALT. DITCH CHECKS
STA 641+82.19, 58.7' RT

MATCHLINE STA 642+50 EXIST. I-270

TEMPORARY EROSION CONTROL LEGEND

(A)	ALTERNATE DITCH CHECK
(C)	INLET CHECK
(R)	ROCK DITCH CHECK
(S)	SEDIMENT TRAP
	SILT FENCE

SCALE

0 50 100 150

I-270 EROSION CONTROL
PRECONSTRUCTION
STA 617+00 TO STA 630+50
SHEET 4 OF 7

STATE OF MISSOURI
EUGENE LOUIS KUEKER JR.
NUMBER PE-2011002912
PROFESSIONAL ENGINEER

THIS SHEET HAS BEEN SIGNED, SEALED, AND DATED ELECTRONICALLY.

IF A SEAL IS PRESENT ON THIS SHEET IT HAS BEEN ELECTRONICALLY SEALED AND DATED.

DATE PREPARED
3/25/2026

ROUTE	STATE
I-270	MO
DISTRICT	SHEET NO.
SL	96

COUNTY
ST. LOUIS

JOB NO.
JSL0021

CONTRACT ID.

PROJECT NO.

BRIDGE NO.

REV.	DATE	DESCRIPTION

MISSOURI HIGHWAYS AND TRANSPORTATION COMMISSION

105 WEST CAPITOL
JEFFERSON CITY, MO 65102
1-888-ASK-MODOT (1-888-275-6636)

HDR Engineering, Inc.
1001 Highlands Plaza Drive
Suite 200
St. Louis, MO 63110-1337
314-425-8300
Certificate of Authority: 000856

MATCHLINE STA 642+50 EXIST. I-270

MATCHLINE STA 656+00 EXIST. I-270

DUNN RD

S68°02'41"E

℄ EXIST. DUNN RD

S.L.

℄ EXIST. I-270

I-270 WB

I-270 EB

INLET CHECK
STA 655+53.95

S82°15'31"E

S.L.

ALT. DITCH CHECK
@ 40' SPACING
(3.7% SLOPE,
18" HEIGHT)

℄ EXIST.
RAMP 2

RAMP 2

BEGIN ALT. DITCH CHECKS
STA 653+89.01, 60.9' RT

SECTION 33

SECTION 34

TEMPORARY EROSION CONTROL LEGEND

- (A) ALTERNATE DITCH CHECK
- (C) INLET CHECK
- (R) ROCK DITCH CHECK
- (S) SEDIMENT TRAP
- SILT FENCE

SCALE
0 50 100 150

I-270 EROSION CONTROL
PRECONSTRUCTION
STA 642+50 TO STA 656+00
SHEET 5 OF 7

STATE OF MISSOURI
EUGENE LOUIS KUELKER JR.
NUMBER PE-2010000912
PROFESSIONAL ENGINEER

THIS SHEET HAS BEEN SIGNED, SEALED, AND DATED ELECTRONICALLY.

IF A SEAL IS PRESENT ON THIS SHEET IT HAS BEEN ELECTRONICALLY SEALED AND DATED.

DATE PREPARED	
3/25/2026	
ROUTE	STATE
I-270	MO
DISTRICT	SHEET NO.
SL	97
COUNTY	
ST. LOUIS	
JOB NO.	
JSL0021	
CONTRACT ID.	
PROJECT NO.	
BRIDGE NO.	

NO.	DESCRIPTION	DATE

MISSOURI HIGHWAYS AND TRANSPORTATION COMMISSION

105 WEST CAPITOL
JEFFERSON CITY, MO 65102
1-888-ASK-MODOT (1-888-275-6636)

HDR Engineering, Inc.
1001 Highlands Plaza Drive
Suite 200
St. Louis, MO 63110-1337
314-425-8300
Certificate of Authority: 000856

c:\pwworking\central01\d4324513\092_EC05_JSL0021_I50_I-270.dgn 2:43:48 PM 3/25/2026

TEMPORARY EROSION CONTROL LEGEND

- (A) ALTERNATE DITCH CHECK
- (C) INLET CHECK
- (R) ROCK DITCH CHECK
- (S) SEDIMENT TRAP
- SILT FENCE

MATCHLINE STA 656+00

MATCHLINE STA 669+50 EXIST. I-270

ALT. DITCH CHECK @ 75' SPACING (2.0% SLOPE, 18" HEIGHT)

℄ EXIST. BELLEFONTAINE RD

(SEE BELLEFONTAINE RD PRECONSTRUCTION EROSION CONTROL SHEET FOR DETAILS)

BELLEFONTAINE RD

BEGIN ALT. DITCH CHECKS STA 656+20.10, 134.2' LT

END ALT. DITCH CHECKS STA 656+92.56, 119.4' LT

S77°57'25"E

℄ EXIST. DUNN RD

DUNN RD

S.L.

INLET CHECK STA 657+55.65, 106.5' LT

INLET CHECK STA 658+53.05

INLET CHECK STA 659+52.20

BRIDGE A9494

BRIDGE A9493

INLET CHECK STA 661+64.78, 50.5' LT

INLET CHECK STA 661+72.05, 49.9' RT

I-270 WB

I-270 EB

INLET CHECK STA 664+02.24

℄ EXIST. I-270

ALT. DITCH CHECK @ 30' SPACING (5.1% SLOPE, 18" HEIGHT)

(SEE BELLEFONTAINE RD PRECONSTRUCTION EROSION CONTROL SHEET FOR DETAILS)

S.L.

RAMP 4

S85°43'01"E

℄ EXIST. RAMP 4

RAMP 2

S70°41'14"E

℄ EXIST. RAMP 2

SEDIMENT TRAP STA 659+48.72, 108.5' RT

ALT. DITCH CHECK @ 40' SPACING (3.7% SLOPE, 18" HEIGHT)

ALT. DITCH CHECK @ 70' SPACING (2.2% SLOPE, 18" HEIGHT)

INLET CHECK STA 659+46.13, 123.5' RT

END ALT. DITCH CHECKS STA 659+25.57, 120.9' RT

SECTION 34

US SURVEY 2713

S07°21'58"W

SCALE

0 50 100 150

I-270 EROSION CONTROL PRECONSTRUCTION STA 656+00 TO STA 669+50 SHEET 6 OF 7

STATE OF MISSOURI
EUGENE LOUIS KUEBLER JR.
NUMBER PE-2011000912
PROFESSIONAL ENGINEER

THIS SHEET HAS BEEN SIGNED, SEALED, AND DATED ELECTRONICALLY.

DATE PREPARED	3/25/2026
ROUTE	STATE
I-270	MO
DISTRICT	SHEET NO.
SL	98
COUNTY	ST. LOUIS
JOB NO.	JSL0021
CONTRACT ID.	
PROJECT NO.	
BRIDGE NO.	

DESCRIPTION | DATE

IF A SEAL IS PRESENT ON THIS SHEET IT HAS BEEN ELECTRONICALLY SEALED AND DATED.

MISSOURI HIGHWAYS AND TRANSPORTATION COMMISSION

105 WEST CAPITOL
JEFFERSON CITY, MO 65102
1-888-ASK-MODOT (1-888-275-6636)

HDR Engineering, Inc.
1001 Highlands Plaza Drive
Suite 200
St. Louis, MO 63110-1337
314-425-8300
Certificate of Authority: 000856

MATCHLINE STA 669+50 EXIST. I-270

670

675

680

DUNN RD

S.L.

℄ EXIST. I-270

I-270 WB

S77°57'25"E

I-270 EB

S77°57'26"E

℄ EXIST. RAMP 4

S.L.

PERSHALL RD

US SURVEY 2713

US SURVEY 142

10

SCALE

0 50 100 150

TEMPORARY EROSION CONTROL LEGEND

A	ALTERNATE DITCH CHECK
C	INLET CHECK
R	ROCK DITCH CHECK
S	SEDIMENT TRAP
	SILT FENCE

I-270 EROSION CONTROL
PRECONSTRUCTION
STA 669+50 TO STA 683+00
SHEET 7 OF 7

STATE OF MISSOURI
EUGENE LOUIS KUELKER JR.
NUMBER PE-2010000912
PROFESSIONAL ENGINEER

THIS SHEET HAS BEEN SIGNED, SEALED, AND DATED ELECTRONICALLY.

IF A SEAL IS PRESENT ON THIS SHEET IT HAS BEEN ELECTRONICALLY SEALED AND DATED.

DATE PREPARED: 3/25/2026

ROUTE	STATE
I-270	MO

DISTRICT	SHEET NO.
SL	99

COUNTY: ST. LOUIS

JOB NO.: JSL0021

CONTRACT ID.:

PROJECT NO.:

BRIDGE NO.:

DESCRIPTION	DATE

MISSOURI HIGHWAYS AND TRANSPORTATION COMMISSION

105 WEST CAPITOL
JEFFERSON CITY, MO 65102
1-888-ASK-MODOT (1-888-275-6636)

HDR Engineering, Inc.
1001 Highlands Plaza Drive
Suite 200
St. Louis, MO 63110-1337
314-425-8300
Certificate of Authority: 000856

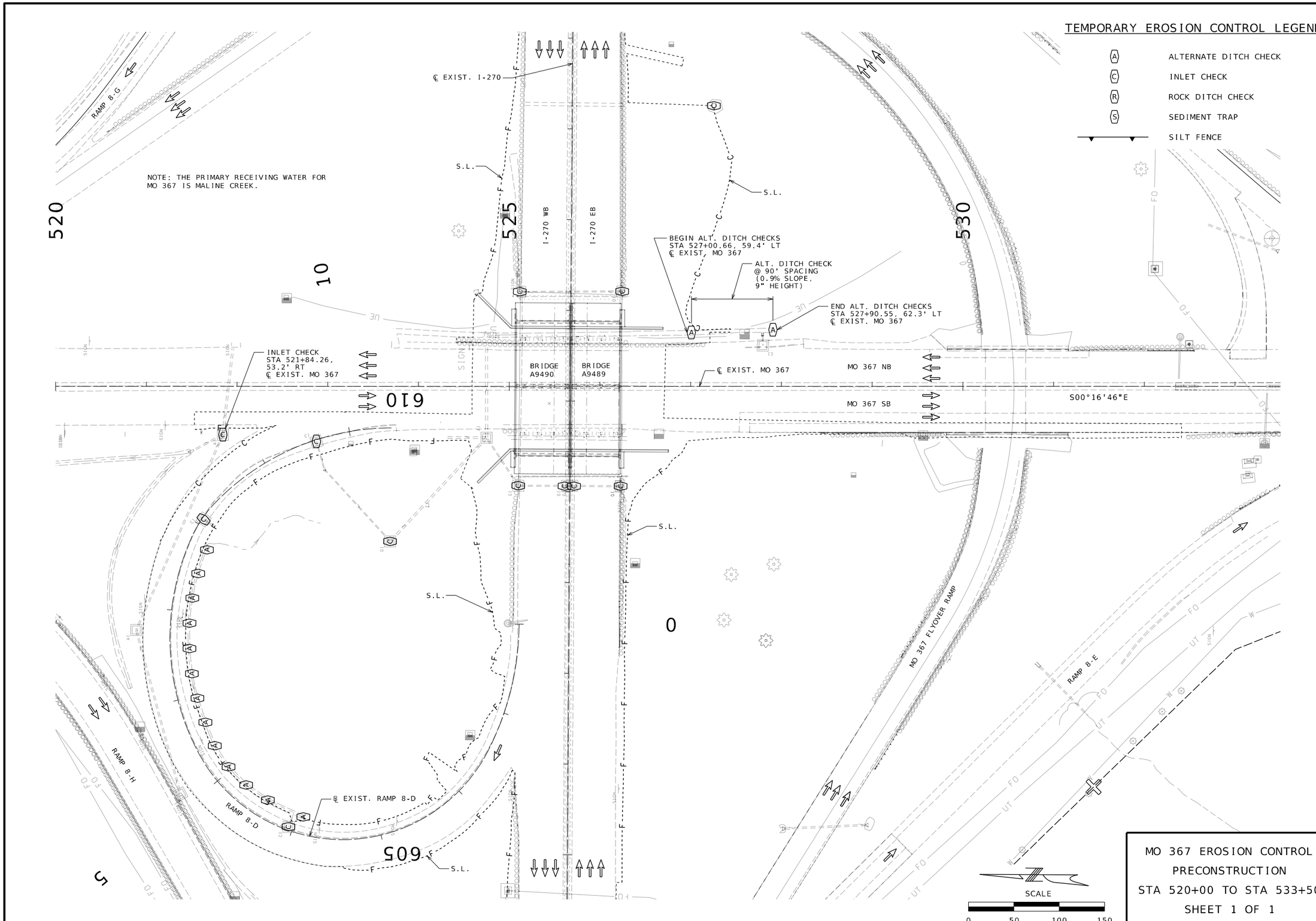

MO 367 EROSION CONTROL
PRECONSTRUCTION
STA 520+00 TO STA 533+50
SHEET 1 OF 1

STATE OF MISSOURI
EUGENE LOUIS KUELKER JR.
NUMBER PE-2011000912
PROFESSIONAL ENGINEER

THIS SHEET HAS BEEN SIGNED, SEALED, AND DATED ELECTRONICALLY.

DATE PREPARED	3/25/2026
ROUTE	I-270
STATE	MO
DISTRICT	SL
SHEET NO.	100
COUNTY	ST. LOUIS
JOB NO.	JSL0021
CONTRACT ID.	
PROJECT NO.	
BRIDGE NO.	

DATE	DESCRIPTION

IF A SEAL IS PRESENT ON THIS SHEET IT HAS BEEN ELECTRONICALLY SEALED AND DATED.

MISSOURI HIGHWAYS AND TRANSPORTATION COMMISSION

MoDOT

105 WEST CAPITOL
JEFFERSON CITY, MO 65102
1-888-ASK-MODOT (1-888-275-6636)

HDR Engineering, Inc.
1001 Highlands Plaza Drive
Suite 200
St. Louis, MO 63110-1337
314-425-8300
Certificate of Authority: 000856

c:\pwworking\central01\d4324513\095_EC08_JSL0021_I50_MO-367.dgn 2:44:22 PM 3/25/2026

SCALE

0 50 100 150

℄ EXIST. DUNN RD

℄ EXIST. RAMP 4

RAMP 4

S85°43'01"E

DUNN RD

℄ EXIST I-270

I-270 WB

I-270 EB

S.L.

S77°57'25"E

665

10

15

20

INLET CHECK
STA 13+65.06
43.1' LT
℄ EXIST. BELLEFONTAINE RD

℄ EXIST.
BELLEFONTAINE RD

BELLEFONTAINE RD NB

BELLEFONTAINE RD SB

BRIDGE
A9493

BRIDGE
A9494

0

S07°21'58"W

660

INLET CHECK
STA 13+64.92
45.0' RT
℄ EXIST. BELLEFONTAINE RD

US SURVEY 2713

SECTION 34

RAMP 2

℄ EXIST.
RAMP 2

S70°41'14"E

S68°02'41"E

15

NOTE: THE PRIMARY RECEIVING WATER FOR BELLEFONTAINE RD IS MALINE CREEK.

TEMPORARY EROSION CONTROL LEGEND

A	ALTERNATE DITCH CHECK
C	INLET CHECK
R	ROCK DITCH CHECK
S	SEDIMENT TRAP
	SILT FENCE

BELLEFONTAINE RD
EROSION CONTROL
PRECONSTRUCTION
STA 8+00 TO STA 21+50
SHEET 1 OF 1

STATE OF MISSOURI
EUGENE LOUIS KUEKER JR.
NUMBER PE-2010000912
PROFESSIONAL ENGINEER

THIS SHEET HAS BEEN SIGNED, SEALED, AND DATED ELECTRONICALLY.

IF A SEAL IS PRESENT ON THIS SHEET IT HAS BEEN ELECTRONICALLY SEALED AND DATED.

DATE PREPARED: 3/25/2026

ROUTE	STATE
I-270	MO

DISTRICT	SHEET NO.
SL	101

COUNTY: ST. LOUIS

JOB NO.: JSL0021

CONTRACT ID.:

PROJECT NO.:

BRIDGE NO.:

DESCRIPTION	DATE

MISSOURI HIGHWAYS AND TRANSPORTATION COMMISSION

105 WEST CAPITOL
JEFFERSON CITY, MO 65102
1-888-ASK-MODOT (1-888-275-6636)

HDR Engineering, Inc.
1001 Highlands Plaza Drive
Suite 200
St. Louis, MO 63110-1337
314-425-8300
Certificate of Authority: 000856

TEMPORARY EROSION CONTROL LEGEND

- (A) ALTERNATE DITCH CHECK
- (C) INLET CHECK
- (R) ROCK DITCH CHECK
- (S) SEDIMENT TRAP
- PLACED IN PREVIOUS PHASE
- SILT FENCE
- TEMPORARY SEEDING & MULCHING

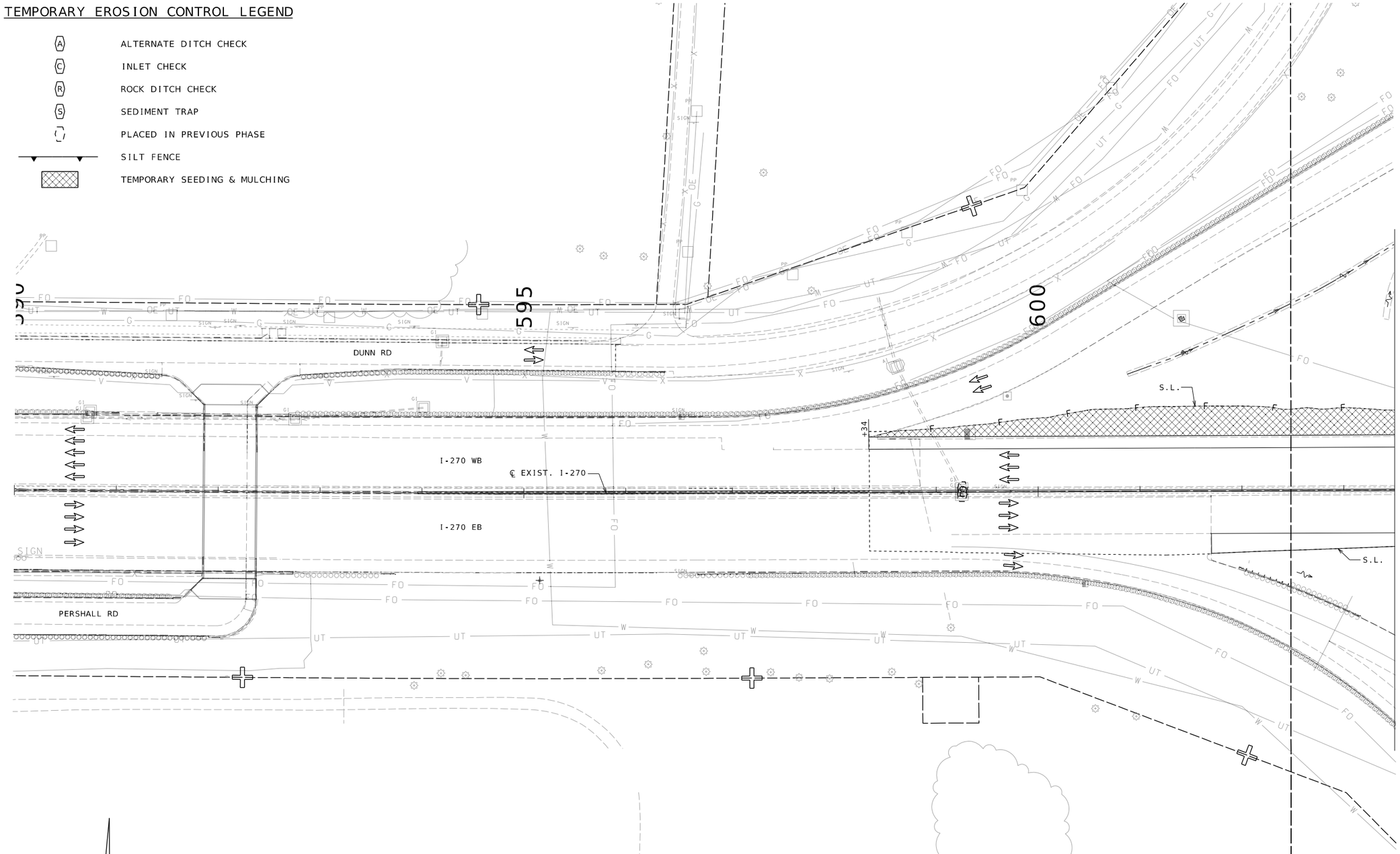

MATCHLINE STA 603+50 EXIST. I-270

SCALE
0 50 100 150

I-270 EROSION CONTROL
DURING CONSTRUCTION
STA 590+00 TO STA 603+50
SHEET 1 OF 7

STATE OF MISSOURI
EUGENE LOUIS KUEKER JR.
NUMBER PE-2011000912
PROFESSIONAL ENGINEER

THIS SHEET HAS BEEN SIGNED, SEALED, AND DATED ELECTRONICALLY.

IF A SEAL IS PRESENT ON THIS SHEET IT HAS BEEN ELECTRONICALLY SEALED AND DATED.

DATE PREPARED	3/25/2026
ROUTE	I-270
STATE	MO
DISTRICT	SL
SHEET NO.	102
COUNTY	ST. LOUIS
JOB NO.	JSL0021
CONTRACT ID.	
PROJECT NO.	
BRIDGE NO.	

DESCRIPTION | DATE

MISSOURI HIGHWAYS AND TRANSPORTATION COMMISSION
105 WEST CAPITOL
JEFFERSON CITY, MO 65102
1-888-ASK-MODOT (1-888-275-6636)

HDR Engineering, Inc.
1001 Highlands Plaza Drive
Suite 200
St. Louis, MO 63110-1337
314-425-8300
Certificate of Authority: 000856

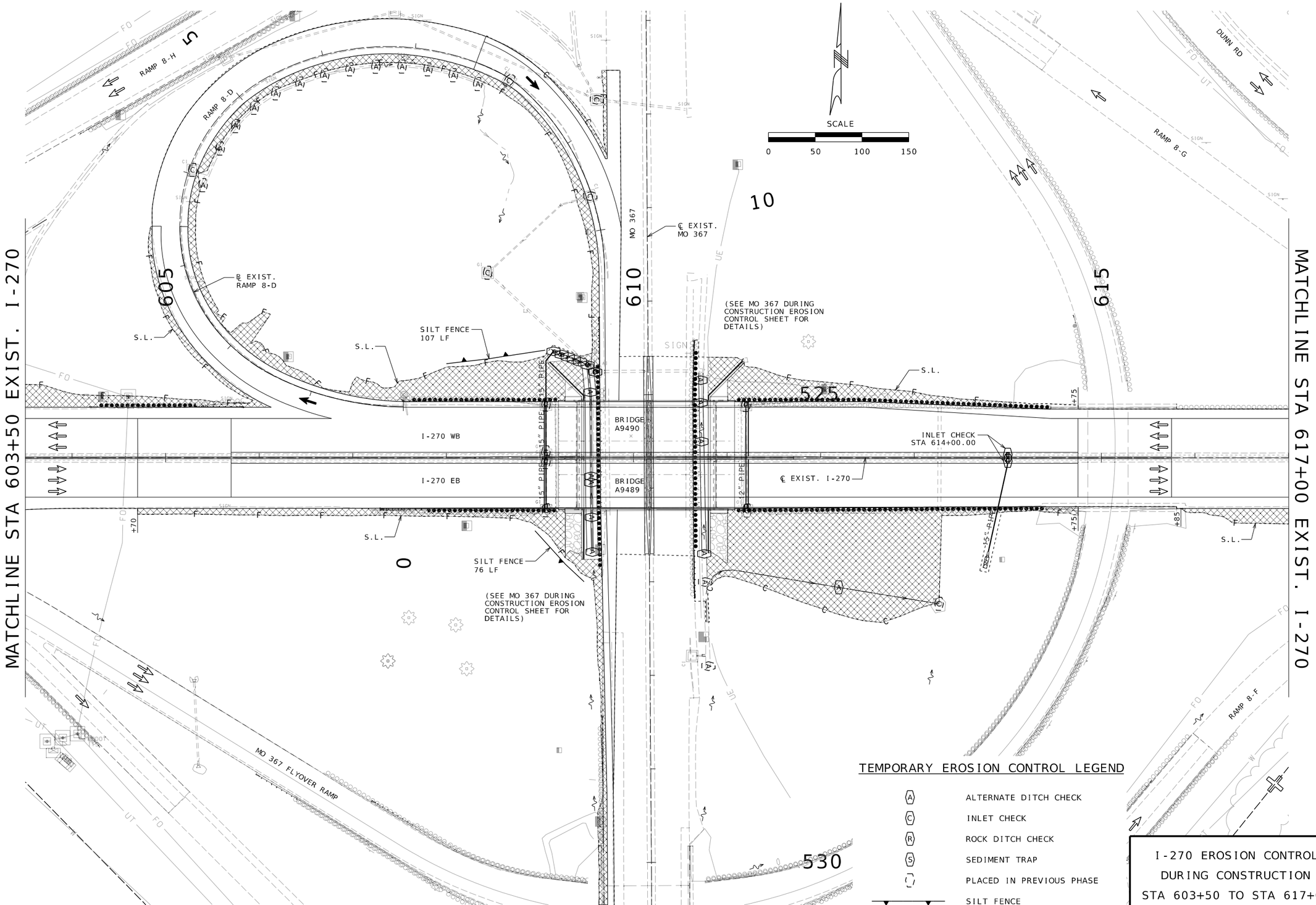

TEMPORARY EROSION CONTROL LEGEND

A	ALTERNATE DITCH CHECK
C	INLET CHECK
R	ROCK DITCH CHECK
S	SEDIMENT TRAP
	PLACED IN PREVIOUS PHASE
	SILT FENCE
	TEMPORARY SEEDING & MULCHING

I-270 EROSION CONTROL
DURING CONSTRUCTION
STA 603+50 TO STA 617+00
SHEET 2 OF 7

STATE OF MISSOURI
EUGENE LOUIS KUELKER JR.
NUMBER PE-2011000912
PROFESSIONAL ENGINEER

THIS SHEET HAS BEEN SIGNED, SEALED, AND DATED ELECTRONICALLY.

DATE PREPARED	3/25/2026
ROUTE	I-270
STATE	MO
DISTRICT	SL
SHEET NO.	103
COUNTY	ST. LOUIS
JOB NO.	JSL0021
CONTRACT ID.	
PROJECT NO.	
BRIDGE NO.	

DATE	DESCRIPTION

IF A SEAL IS PRESENT ON THIS SHEET IT HAS BEEN ELECTRONICALLY SEALED AND DATED.

MISSOURI HIGHWAYS AND TRANSPORTATION COMMISSION
MoDOT
105 WEST CAPITOL
JEFFERSON CITY, MO 65102
1-888-ASK-MODOT (1-888-275-6636)

HDR Engineering, Inc.
1001 Highlands Plaza Drive
Suite 200
St. Louis, MO 63110-1337
314-425-8300
Certificate of Authority: 000856

c:\pwworking\central01\d4324513\098_EC11_JSL0021_I50_I-270.dgn 2:44:45 PM 3/25/2026

MATCHLINE STA 617+00 EXIST. I-270

620

625

630

MATCHLINE STA 630+50 EXIST. I-270

DUNN RD

RAMP 8-G

RAMP 8-F

℄ EXIST. I-270

I-270 WB

I-270 EB

S89°54'40"E

S.L.

S.L.

S.L.

+81.0

TEMPORARY EROSION CONTROL LEGEND

- (A) ALTERNATE DITCH CHECK
- (C) INLET CHECK
- (R) ROCK DITCH CHECK
- (S) SEDIMENT TRAP
- PLACED IN PREVIOUS PHASE
- SILT FENCE
- TEMPORARY SEEDING & MULCHING

SCALE

0 50 100 150

I-270 EROSION CONTROL
DURING CONSTRUCTION
STA 617+00 TO STA 630+50
SHEET 3 OF 7

STATE OF MISSOURI
EUGENE LOUIS KUEKER JR.
NUMBER PE-2010000912
PROFESSIONAL ENGINEER

THIS SHEET HAS BEEN SIGNED, SEALED, AND DATED ELECTRONICALLY.

IF A SEAL IS PRESENT ON THIS SHEET IT HAS BEEN ELECTRONICALLY SEALED AND DATED.

DATE PREPARED
3/25/2026

ROUTE	STATE
I-270	MO
DISTRICT	SHEET NO.
SL	104

COUNTY
ST. LOUIS

JOB NO.
JSL0021

CONTRACT ID.

PROJECT NO.

BRIDGE NO.

DESCRIPTION	DATE

MISSOURI HIGHWAYS AND TRANSPORTATION COMMISSION

105 WEST CAPITOL
JEFFERSON CITY, MO 65102
1-888-ASK-MODOT (1-888-275-6636)

HDR Engineering, Inc.
1001 Highlands Plaza Drive
Suite 200
St. Louis, MO 63110-1337
314-425-8300
Certificate of Authority: 000856

MATCHLINE STA 630+50 EXIST. I-270

MATCHLINE STA 642+50 EXIST. I-270

635

640

DUNN RD

I-270 WB

℄ EXIST. I-270

I-270 EB

S.L.

+40

+99

+14

+38

+52

+26

TEMPORARY EROSION CONTROL LEGEND

- (A) ALTERNATE DITCH CHECK
- (C) INLET CHECK
- (R) ROCK DITCH CHECK
- (S) SEDIMENT TRAP
- [ ] PLACED IN PREVIOUS PHASE
- SILT FENCE
- TEMPORARY SEEDING & MULCHING

SCALE

0 50 100 150

I-270 EROSION CONTROL
DURING CONSTRUCTION
STA 630+50 TO STA 642+50
SHEET 4 OF 7

STATE OF MISSOURI
EUGENE LOUIS KUEKER JR.
NUMBER PE-2011000912
PROFESSIONAL ENGINEER

THIS SHEET HAS BEEN SIGNED, SEALED, AND DATED ELECTRONICALLY.

DATE PREPARED
3/25/2026

ROUTE	STATE
I-270	MO
DISTRICT	SHEET NO.
SL	105

COUNTY
ST. LOUIS

JOB NO.
JSL0021

CONTRACT ID.

PROJECT NO.

BRIDGE NO.

DESCRIPTION	DATE

IF A SEAL IS PRESENT ON THIS SHEET IT HAS BEEN ELECTRONICALLY SEALED AND DATED.

MISSOURI HIGHWAYS AND TRANSPORTATION COMMISSION

105 WEST CAPITOL
JEFFERSON CITY, MO 65102
1-888-ASK-MODOT (1-888-275-6636)

HDR Engineering, Inc.
1001 Highlands Plaza Drive
Suite 200
St. Louis, MO 63110-1337
314-425-8300
Certificate of Authority: 000856

REV.

MATCHLINE STA 642+50 EXIST. I-270

MATCHLINE STA 656+00 EXIST. I-270

SECTION 33

SECTION 34

645

650

655

DUNN RD

℄ EXIST. DUNN RD

S68°02'41"E

S82°15'31"E

S.L.

+32

+85

+14

+44

+70

℄ EXIST. I-270

I-270 WB

I-270 EB

℄ EXIST. RAMP 2

RAMP 2

0

5

10

TEMPORARY EROSION CONTROL LEGEND

- (A) ALTERNATE DITCH CHECK
- (C) INLET CHECK
- (R) ROCK DITCH CHECK
- (S) SEDIMENT TRAP
- PLACED IN PREVIOUS PHASE
- SILT FENCE
- TEMPORARY SEEDING & MULCHING

SCALE

0 50 100 150

I-270 EROSION CONTROL DURING CONSTRUCTION STA 642+50 TO STA 656+00

SHEET 5 OF 7

STATE OF MISSOURI
EUGENE LOUIS KUELKER JR.
NUMBER PE-2011000912
PROFESSIONAL ENGINEER

THIS SHEET HAS BEEN SIGNED, SEALED, AND DATED ELECTRONICALLY.

IF A SEAL IS PRESENT ON THIS SHEET IT HAS BEEN ELECTRONICALLY SEALED AND DATED.

DATE PREPARED
3/25/2026

ROUTE	STATE
I-270	MO
DISTRICT	SHEET NO.
SL	106

COUNTY
ST. LOUIS

JOB NO.
JSL0021

CONTRACT ID.

PROJECT NO.

BRIDGE NO.

NO.	DESCRIPTION	DATE

MISSOURI HIGHWAYS AND TRANSPORTATION COMMISSION

105 WEST CAPITOL
JEFFERSON CITY, MO 65102
1-888-ASK-MODOT (1-888-275-6636)

HDR Engineering, Inc.
1001 Highlands Plaza Drive
Suite 200
St. Louis, MO 63110-1337
314-425-8300
Certificate of Authority: 000856

TEMPORARY EROSION CONTROL LEGEND

- (A) ALTERNATE DITCH CHECK
- (C) INLET CHECK
- (R) ROCK DITCH CHECK
- (S) SEDIMENT TRAP
- PLACED IN PREVIOUS PHASE
- SILT FENCE
- TEMPORARY SEEDING & MULCHING

MATCHLINE STA 656+00 EXIST. I-270

MATCHLINE STA 669+50 EXIST. I-270

BELLEFONTAINE RD

℄ EXIST. BELLEFONTAINE RD

(SEE BELLEFONTAINE RD PRECONSTRUCTION EROSION CONTROL SHEET FOR DETAILS)

SILT FENCE 192 LF

S77°57'25"E

℄ EXIST. DUNN RD

DUNN RD

SILT FENCE 750 LF

S.L.

INLET CHECK STA 657+11.29

INLET CHECK STA 657+61.29

INLET CHECK STA 658+11.31

BRIDGE A9494

BRIDGE A9493

I-270 WB

I-270 EB

INLET CHECK STA 664+02.01

℄ EXIST. I-270

RAMP 2 S.L.

SILT FENCE 154 LF

S70°41'14"E

SILT FENCE 183 LF

℄ EXIST. RAMP 2

SEDIMENT TRAP STA 658+11.30, 104.1' RT

RAMP 4

S85°43'01"E

SILT FENCE 185 LF

℄ EXIST. RAMP 4

(SEE BELLEFONTAINE RD PRECONSTRUCTION EROSION CONTROL SHEET FOR DETAILS)

S07°21'58"W

SECTION 34

US SURVEY 2713

SCALE

0 50 100 150

I-270 EROSION CONTROL
DURING CONSTRUCTION
STA 656+00 TO STA 669+50
SHEET 6 OF 7

STATE OF MISSOURI
EUGENE LOUIS KUEKER JR.
NUMBER PE-2010000912
PROFESSIONAL ENGINEER

THIS SHEET HAS BEEN SIGNED, SEALED, AND DATED ELECTRONICALLY.

IF A SEAL IS PRESENT ON THIS SHEET IT HAS BEEN ELECTRONICALLY SEALED AND DATED.

DATE PREPARED	
3/25/2026	
ROUTE	STATE
I-270	MO
DISTRICT	SHEET NO.
SL	107
COUNTY	
ST. LOUIS	
JOB NO.	
JSL0021	
CONTRACT ID.	
PROJECT NO.	
BRIDGE NO.	

DATE	DESCRIPTION

MISSOURI HIGHWAYS AND TRANSPORTATION COMMISSION

105 WEST CAPITOL
JEFFERSON CITY, MO 65102
1-888-ASK-MODOT (1-888-275-6636)

HDR Engineering, Inc.
1001 Highlands Plaza Drive
Suite 200
St. Louis, MO 63110-1337
314-425-8300
Certificate of Authority: 000856

MATCHLINE STA 669+50 EXIST. I-270

670

675

680

SILT FENCE
493 LF

DUNN RD

S.L.

℄ EXIST. I-270

I-270 WB

S77°57'25"E

I-270 EB

℄ EXIST. RAMP 4

S77°57'26"E

S.L.

PERSHALL RD

US SURVEY 2713

US SURVEY 112

10

SCALE

0 50 100 150

TEMPORARY EROSION CONTROL LEGEND

A	ALTERNATE DITCH CHECK
C	INLET CHECK
R	ROCK DITCH CHECK
S	SEDIMENT TRAP
[ ]	PLACED IN PREVIOUS PHASE
	SILT FENCE
	TEMPORARY SEEDING & MULCHING

I-270 EROSION CONTROL DURING CONSTRUCTION STA 669+50 TO STA 683+00

SHEET 7 OF 7

STATE OF MISSOURI
EUGENE LOUIS KUELKER JR.
NUMBER PE-2010000912
PROFESSIONAL ENGINEER

THIS SHEET HAS BEEN SIGNED, SEALED, AND DATED ELECTRONICALLY.

IF A SEAL IS PRESENT ON THIS SHEET IT HAS BEEN ELECTRONICALLY SEALED AND DATED.

DATE PREPARED
3/25/2026

ROUTE	STATE
I-270	MO

DISTRICT	SHEET NO.
SL	108

COUNTY
ST. LOUIS

JOB NO.
JSL0021

CONTRACT ID.

PROJECT NO.

BRIDGE NO.

DESCRIPTION	DATE

MISSOURI HIGHWAYS AND TRANSPORTATION COMMISSION

105 WEST CAPITOL
JEFFERSON CITY, MO 65102
1-888-ASK-MODOT (1-888-275-6636)

HDR Engineering, Inc.
1001 Highlands Plaza Drive
Suite 200
St. Louis, MO 63110-1337
314-425-8300
Certificate of Authority: 000856

TEMPORARY EROSION CONTROL LEGEND

- ALTERNATE DITCH CHECK
- INLET CHECK
- ROCK DITCH CHECK
- SEDIMENT TRAP
- PLACED IN PREVIOUS PHASE
- SILT FENCE
- TEMPORARY SEEDING & MULCHING

℄ EXIST. I-270

I-270 WB

I-270 EB

S.L.

END ALT. DITCH CHECKS
STA 527+07.22, 202.1' LT
℄ EXIST. MO 367

ALT. DITCH CHECK
@ 120' SPACING
(0.7% SLOPE,
9" HEIGHT)
℄ EXIST. MO 367

ALT. DITCH CHECK
@ 24' SPACING
(3.1% SLOPE,
9" HEIGHT)
℄ EXIST. MO 367

ALT. DITCH CHECK
@ 150' SPACING
(0.9% SLOPE,
9" HEIGHT)

+60 ℄ EXIST. MO 367

+02 ℄ EXIST. MO 367

BEGIN ALT. DITCH CHECKS
STA 524+85.73, 55.9' LT

BRIDGE A9490

BRIDGE A9489

℄ EXIST. MO 367

MO 367 NB

MO 367 SB

S00°16'46"E

INLET CHECK
STA 524+75.50,
56.6' RT
℄ EXIST. MO 367

END ALT. DITCH CHECKS
STA 526+68.61, 60.8' RT
℄ EXIST. MO 367

ALT. DITCH CHECK
@ 37' SPACING
(2.0% SLOPE,
9" HEIGHT)

SEDIMENT TRAP
STA 524+67.90
64.8' RT
℄ EXIST. MO 367

BEGIN ALT. DITCH CHECKS
STA 524+52.96, 101.1' RT

ALT. DITCH CHECK
@ 7' SPACING
(33.3% SLOPE,
9" HEIGHT)

ALT. DITCH CHECK
@ 90' SPACING
(0.9% SLOPE,
9" HEIGHT)

+41 ℄ EXIST. MO 367

MO 367 FLYOVER RAMP

RAMP 8-E

RAMP 8-H

RAMP 8-D

℄ EXIST. RAMP 8-D

520 525 530 10 610 0 605

SCALE
0 50 100 150

MO 367 EROSION CONTROL
DURING CONSTRUCTION
STA 520+00 TO STA 533+50
SHEET 1 OF 1

STATE OF MISSOURI
EUGENE LOUIS KUEKER JR.
NUMBER PE-2011000912
PROFESSIONAL ENGINEER

THIS SHEET HAS BEEN SIGNED, SEALED, AND DATED ELECTRONICALLY.

IF A SEAL IS PRESENT ON THIS SHEET IT HAS BEEN ELECTRONICALLY SEALED AND DATED.

DATE PREPARED	
3/25/2026	
ROUTE	STATE
I-270	MO
DISTRICT	SHEET NO.
SL	109
COUNTY	
ST. LOUIS	
JOB NO.	
JSL0021	
CONTRACT ID.	
PROJECT NO.	
BRIDGE NO.	

DATE	DESCRIPTION

MISSOURI HIGHWAYS AND TRANSPORTATION COMMISSION

105 WEST CAPITOL
JEFFERSON CITY, MO 65102
1-888-ASK-MODOT (1-888-275-6636)

HDR Engineering, Inc.
1001 Highlands Plaza Drive
Suite 200
St. Louis, MO 63110-1337
314-425-8300
Certificate of Authority: 000856

c:\pwworking\central01\d4324513\104_EC17_JSL0021_I50_MO-367.dgn 2:45:28 PM 3/25/2026

SCALE

0 50 100 150

TEMPORARY EROSION CONTROL LEGEND

- (A) ALTERNATE DITCH CHECK
- (C) INLET CHECK
- (R) ROCK DITCH CHECK
- (S) SEDIMENT TRAP
- (7) PLACED IN PREVIOUS PHASE
- SILT FENCE
- TEMPORARY SEEDING & MULCHING

℄ EXIST. DUNN RD

℄ EXIST. RAMP 4

RAMP 4

S85°43'01"E

I-270 WB

I-270 EB

DUNN RD

S.L.

℄ EXIST. I-270

ALT. DITCH CHECK @ 135' SPACING (0.6% SLOPE, 9" HEIGHT)

S77°57'25"E

BEGIN ALT. DITCH CHECKS STA 12+35.78, 52.8' LT ℄ EXIST. BELLEFONTAINE RD

INLET CHECK STA 10+95.26, 48.6' LT ℄ EXIST. BELLEFONTAINE RD

INLET CHECK STA 13+42.07, 42.8' LT ℄ EXIST. BELLEFONTAINE RD

INLET CHECK STA 13+65.16, 49.4' LT ℄ EXIST. BELLEFONTAINE RD

INLET CHECK STA 13+88.07, 42.8' LT ℄ EXIST. BELLEFONTAINE RD

℄ EXIST. BELLEFONTAINE RD

BELLEFONTAINE RD NB

BELLEFONTAINE RD SB

BRIDGE A9493

BRIDGE A9494

S07°21'58"W

END ALT. DITCH CHECKS STA 18+47.46, 39.6' RT ℄ EXIST. BELLEFONTAINE RD

INLET CHECK STA 10+91.99, 44.9' RT ℄ EXIST. BELLEFONTAINE RD

BEGIN ALT. DITCH CHECKS STA 12+17.00, 51.0' RT ℄ EXIST. BELLEFONTAINE RD

ALT. DITCH CHECK @ 105' SPACING (0.8% SLOPE, 9" HEIGHT)

BEGIN ALT. DITCH CHECKS STA 15+20.23, 62.3' RT ℄ EXIST. BELLEFONTAINE RD

ALT. DITCH CHECK @ 40' SPACING (4.0% SLOPE, 18" HEIGHT)

INLET CHECK STA 13+88.07, 29.0' RT ℄ EXIST. BELLEFONTAINE RD

INLET CHECK STA 13+65.18, 29.0' RT ℄ EXIST. BELLEFONTAINE RD

INLET CHECK STA 13+42.08, 29.0' RT ℄ EXIST. BELLEFONTAINE RD

BEGIN ALT. DITCH CHECKS STA 13+22.09, 46.1' RT ℄ EXIST. BELLEFONTAINE RD

℄ EXIST. RAMP 2

RAMP 2

US SURVEY 2713

SECTION 34

S70°41'14"E

BELLEFONTAINE RD
EROSION CONTROL
DURING CONSTRUCTION
STA 8+00 TO STA 21+50
SHEET 1 OF 1

STATE OF MISSOURI
EUGENE LOUIS KUEKER JR.
NUMBER PE-2011000912
PROFESSIONAL ENGINEER

THIS SHEET HAS BEEN SIGNED, SEALED, AND DATED ELECTRONICALLY.

IF A SEAL IS PRESENT ON THIS SHEET IT HAS BEEN ELECTRONICALLY SEALED AND DATED.

DATE PREPARED: 3/25/2026

ROUTE	STATE
I-270	MO
DISTRICT	SHEET NO.
SL	110

COUNTY: ST. LOUIS

JOB NO.: JSL0021

CONTRACT ID.:

PROJECT NO.:

BRIDGE NO.:

DESCRIPTION	DATE

MISSOURI HIGHWAYS AND TRANSPORTATION COMMISSION

105 WEST CAPITOL
JEFFERSON CITY, MO 65102
1-888-ASK-MODOT (1-888-275-6636)

HDR Engineering, Inc.
1001 Highlands Plaza Drive
Suite 200
St. Louis, MO 63110-1337
314-425-8300
Certificate of Authority: 000856

EROSION CONTROL LEGEND

SEEDING - COOL SEASON MIXTURE

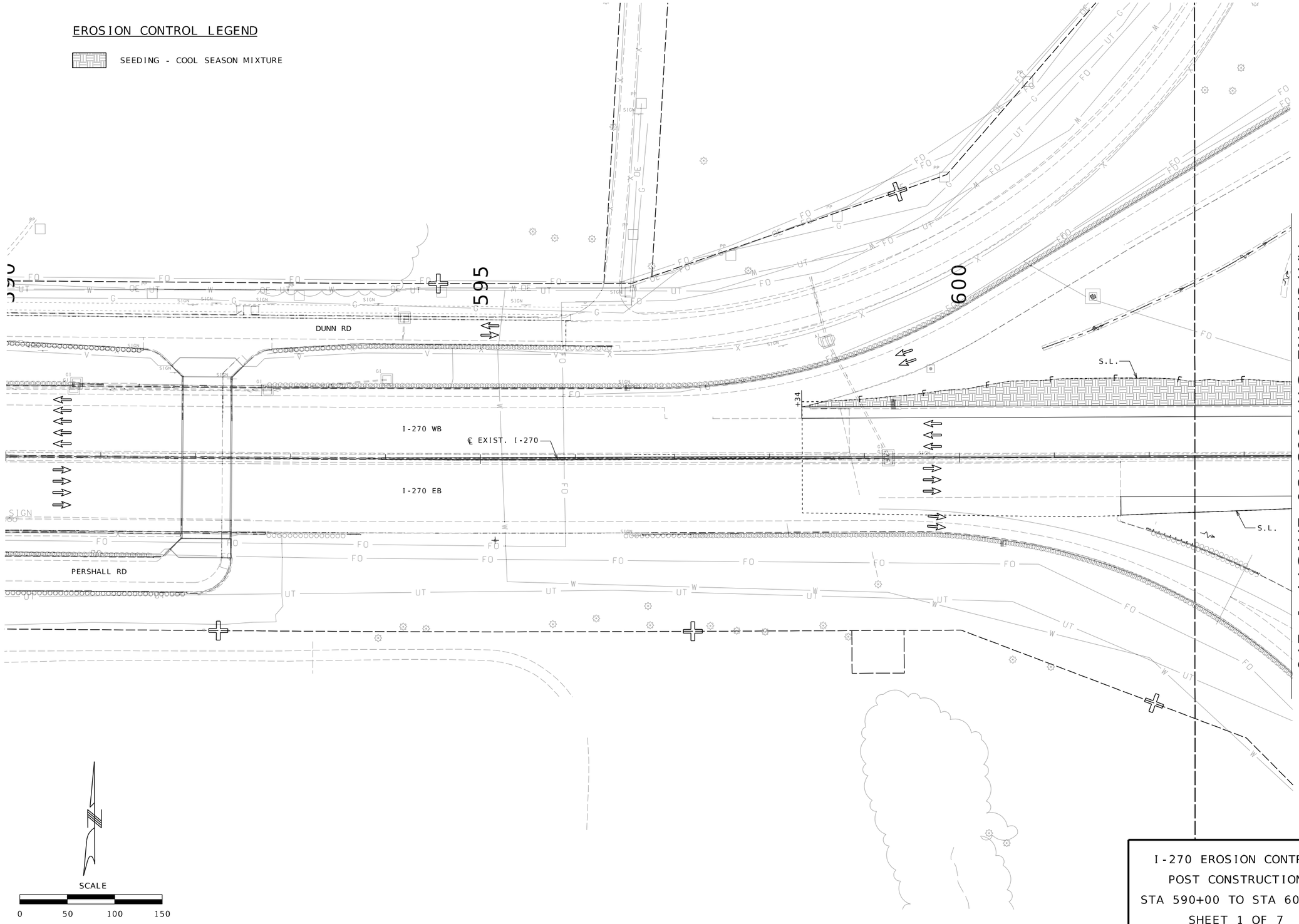

SCALE

0 50 100 150

I-270 EROSION CONTROL
POST CONSTRUCTION
STA 590+00 TO STA 603+50
SHEET 1 OF 7

STATE OF MISSOURI
EUGENE LOUIS KUEKER JR.
NUMBER PE-2011000912
PROFESSIONAL ENGINEER

THIS SHEET HAS BEEN SIGNED, SEALED, AND DATED ELECTRONICALLY.

DATE PREPARED 3/25/2026

ROUTE	STATE
I-270	MO
DISTRICT	SHEET NO.
SL	111

COUNTY: ST. LOUIS

JOB NO.: JSL0021

CONTRACT ID.:

PROJECT NO.:

BRIDGE NO.:

DESCRIPTION	DATE

IF A SEAL IS PRESENT ON THIS SHEET IT HAS BEEN ELECTRONICALLY SEALED AND DATED.

MISSOURI HIGHWAYS AND TRANSPORTATION COMMISSION

105 WEST CAPITOL
JEFFERSON CITY, MO 65102
1-888-ASK-MODOT (1-888-275-6636)

HDR Engineering, Inc.
1001 Highlands Plaza Drive
Suite 200
St. Louis, MO 63110-1337
314-425-8300
Certificate of Authority: 000856

MATCHLINE STA 603+50 EXIST. I-270

MATCHLINE STA 617+00 EXIST. I-270

SCALE
0 50 100 150

RAMP 8-H
RAMP 8-D
RAMP 8-G
RAMP 8-F
DUNN RD
MO 367 FLYOVER RAMP

℄ EXIST. MO 367
℄ EXIST. I-270
℄ EXIST. RAMP 8-D
+42 ℄ EXIST. RAMP 8-D

PROPOSED TURF TYPE TALL FESCUE SODDING
ROCK LINING FOR CULVERT OUTLET
(SEE MO 367 POST CONSTRUCTION EROSION CONTROL PLAN SHEET FOR DETAILS)
TYPE 1 ROCK BLANKET
TYPE 2 ROCK DITCH LINER (14.5' WIDTH)
S.L.

BRIDGE A9490
BRIDGE A9489
I-270 WB
I-270 EB

5" PIPE
15" PIPE
2" PIPE
15"-15" RCP

605 610 615 525 530

+70 +30 +27 +04 +39 +50 +88 +14 +26 +64 +75 +73 +80 +85

EROSION CONTROL LEGEND

SEEDING - COOL SEASON MIXTURE

I-270 EROSION CONTROL
POST CONSTRUCTION
STA 603+50 TO STA 617+00
SHEET 2 OF 7

STATE OF MISSOURI
EUGENE LOUIS KUELKER JR.
NUMBER PE-2010009912
PROFESSIONAL ENGINEER

THIS SHEET HAS BEEN SIGNED, SEALED, AND DATED ELECTRONICALLY.

IF A SEAL IS PRESENT ON THIS SHEET IT HAS BEEN ELECTRONICALLY SEALED AND DATED.

DATE PREPARED	
3/25/2026	
ROUTE	STATE
I-270	MO
DISTRICT	SHEET NO.
SL	112
COUNTY	
ST. LOUIS	
JOB NO.	
JSL0021	
CONTRACT ID.	
PROJECT NO.	
BRIDGE NO.	

DATE	DESCRIPTION

MISSOURI HIGHWAYS AND TRANSPORTATION COMMISSION
105 WEST CAPITOL
JEFFERSON CITY, MO 65102
1-888-ASK-MODOT (1-888-275-6636)

HDR Engineering, Inc.
1001 Highlands Plaza Drive
Suite 200
St. Louis, MO 63110-1337
314-425-8300
Certificate of Authority: 000856

c:\pwworking\central01\d4324513\107_EC20_JSL0021_I50_I-270.dgn 2:45:47 PM 3/25/2026

EROSION CONTROL LEGEND

SEEDING - COOL SEASON MIXTURE

MATCHLINE STA 617+00 EXIST. I-270

MATCHLINE STA 630+50 EXIST. I-270

620

625

630

DUNN RD

RAMP 8-G

RAMP 8-F

S.L.

℄ EXIST. I-270

I-270 WB

I-270 EB

S89°54'40"E

+81.5

SCALE

0 50 100 150

I-270 EROSION CONTROL
POST CONSTRUCTION
STA 617+00 TO STA 630+50
SHEET 3 OF 7

STATE OF MISSOURI
EUGENE LOUIS KUELKER JR.
NUMBER PE-2010000912
PROFESSIONAL ENGINEER

THIS SHEET HAS BEEN SIGNED, SEALED, AND DATED ELECTRONICALLY.

IF A SEAL IS PRESENT ON THIS SHEET IT HAS BEEN ELECTRONICALLY SEALED AND DATED.

DATE PREPARED
3/25/2026

ROUTE	STATE
I-270	MO

DISTRICT	SHEET NO.
SL	113

COUNTY
ST. LOUIS

JOB NO.
JSL0021

CONTRACT ID.

PROJECT NO.

BRIDGE NO.

DESCRIPTION	DATE

MISSOURI HIGHWAYS AND TRANSPORTATION COMMISSION
105 WEST CAPITOL
JEFFERSON CITY, MO 65102
1-888-ASK-MODOT (1-888-275-6636)

HDR Engineering, Inc.
1001 Highlands Plaza Drive
Suite 200
St. Louis, MO 63110-1337
314-425-8300
Certificate of Authority: 000856

MATCHLINE STA 630+50 EXIST. I-270

635

640

DUNN RD

S.L.

+40

+99

+14

I-270 WB

I-270 EB

℄ EXIST. I-270

+38

+52

S.L.

±26

MATCHLINE STA 642+50 EXIST. I-270

℄

EROSION CONTROL LEGEND

SEEDING - COOL SEASON MIXTURE

SCALE

0 50 100 150

I-270 EROSION CONTROL
POST CONSTRUCTION
STA 630+50 TO STA 642+50
SHEET 4 OF 7

STATE OF MISSOURI
EUGENE LOUIS KUELKER JR.
NUMBER PE-2011000912
PROFESSIONAL ENGINEER

THIS SHEET HAS BEEN SIGNED, SEALED, AND DATED ELECTRONICALLY.

IF A SEAL IS PRESENT ON THIS SHEET IT HAS BEEN ELECTRONICALLY SEALED AND DATED.

DATE PREPARED
3/25/2026

ROUTE	STATE
I-270	MO
DISTRICT	SHEET NO.
SL	114

COUNTY
ST. LOUIS

JOB NO.
JSL0021

CONTRACT ID.

PROJECT NO.

BRIDGE NO.

DESCRIPTION	DATE

MISSOURI HIGHWAYS AND TRANSPORTATION COMMISSION
105 WEST CAPITOL
JEFFERSON CITY, MO 65102
1-888-ASK-MODOT (1-888-275-6636)

HDR Engineering, Inc.
1001 Highlands Plaza Drive
Suite 200
St. Louis, MO 63110-1337
314-425-8300
Certificate of Authority: 000856

MATCHLINE STA 642+50 EXIST. I-270

MATCHLINE STA 656+00 EXIST. I-270

SECTION 33

SECTION 34

DUNN RD

S68°02'41"E

℄ EXIST. DUNN RD

S.L.

+32

+85

+14

℄ EXIST. I-270

I-270 WB

I-270 EB

S82°15'31"E

S.L.

℄ EXIST. RAMP 2

+44

+70

RAMP 2

EROSION CONTROL LEGEND

SEEDING - COOL SEASON MIXTURE

SCALE

0 50 100 150

I-270 EROSION CONTROL
POST CONSTRUCTION
STA 642+50 TO STA 656+00
SHEET 5 OF 7

STATE OF MISSOURI
EUGENE LOUIS KUEKER JR.
NUMBER PE-2010000912
PROFESSIONAL ENGINEER

THIS SHEET HAS BEEN SIGNED, SEALED, AND DATED ELECTRONICALLY.

IF A SEAL IS PRESENT ON THIS SHEET IT HAS BEEN ELECTRONICALLY SEALED AND DATED.

DATE PREPARED
3/25/2026

ROUTE	STATE
I-270	MO
DISTRICT	SHEET NO.
SL	115

COUNTY
ST. LOUIS

JOB NO.
JSL0021

CONTRACT ID.

PROJECT NO.

BRIDGE NO.

DESCRIPTION	DATE

MISSOURI HIGHWAYS AND TRANSPORTATION COMMISSION

105 WEST CAPITOL
JEFFERSON CITY, MO 65102
1-888-ASK-MODOT (1-888-275-6636)

HDR Engineering, Inc.
1001 Highlands Plaza Drive
Suite 200
St. Louis, MO 63110-1337
314-425-8300
Certificate of Authority: 000856

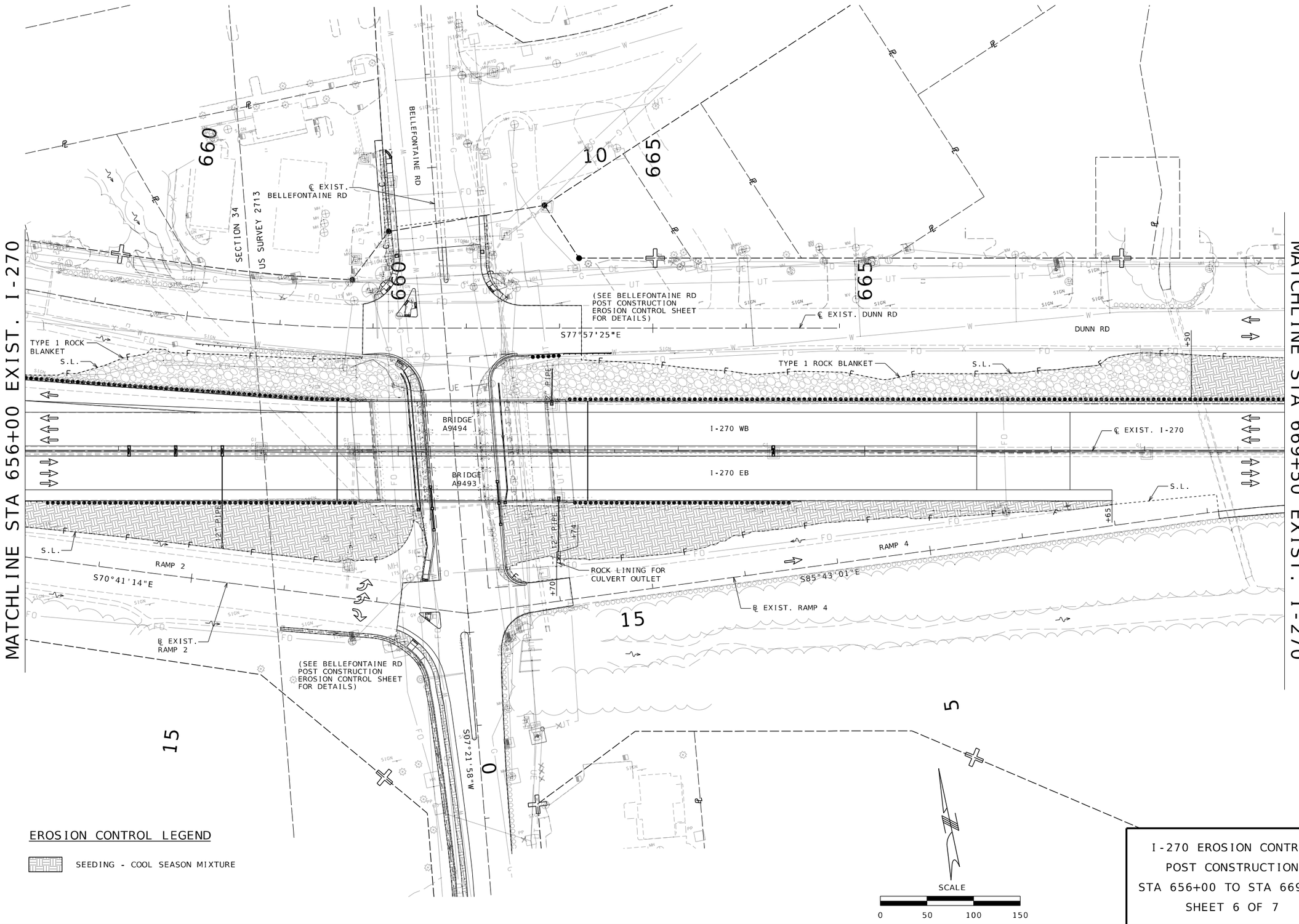

EROSION CONTROL LEGEND

SEEDING - COOL SEASON MIXTURE

I-270 EROSION CONTROL
POST CONSTRUCTION
STA 656+00 TO STA 669+50
SHEET 6 OF 7

STATE OF MISSOURI
EUGENE LOUIS KUELKER JR.
NUMBER PE-2011000912
PROFESSIONAL ENGINEER

THIS SHEET HAS BEEN SIGNED, SEALED, AND DATED ELECTRONICALLY.

DATE PREPARED	3/25/2026
ROUTE I-270	STATE MO
DISTRICT SL	SHEET NO. 116
COUNTY	ST. LOUIS
JOB NO.	JSL0021
CONTRACT ID.	
PROJECT NO.	
BRIDGE NO.	

DATE	DESCRIPTION

IF A SEAL IS PRESENT ON THIS SHEET IT HAS BEEN ELECTRONICALLY SEALED AND DATED.

MISSOURI HIGHWAYS AND TRANSPORTATION COMMISSION

MoDOT

105 WEST CAPITOL
JEFFERSON CITY, MO 65102
1-888-ASK-MODOT (1-888-275-6636)

HDR Engineering, Inc.
1001 Highlands Plaza Drive
Suite 200
St. Louis, MO 63110-1337
314-425-8300
Certificate of Authority: 000856

c:\pwworking\central01\d4324513\111_EC24_JSL0021_I50_I-270.dgn 2:46:17 PM 3/25/2026

MATCHLINE STA 669+50 EXIST. I-270

670

675

680

DUNN RD

S.L.

℄ EXIST. I-270

I-270 WB

S77°57'25"E

I-270 EB

℄ EXIST. RAMP 4

S77°57'26"E

S.L.

PERSHALL RD

US SURVEY 2713

US SURVEY 112

10

SCALE

0 50 100 150

EROSION CONTROL LEGEND

SEEDING - COOL SEASON MIXTURE

I-270 EROSION CONTROL
POST CONSTRUCTION
STA 669+50 TO STA 683+00
SHEET 7 OF 7

STATE OF MISSOURI
EUGENE LOUIS KUELKER JR.
NUMBER PE-2011000912
PROFESSIONAL ENGINEER

THIS SHEET HAS BEEN SIGNED, SEALED, AND DATED ELECTRONICALLY.

IF A SEAL IS PRESENT ON THIS SHEET IT HAS BEEN ELECTRONICALLY SEALED AND DATED.

DATE PREPARED
3/25/2026

ROUTE	STATE
I-270	MO

DISTRICT	SHEET NO.
SL	117

COUNTY
ST. LOUIS

JOB NO.
JSL0021

CONTRACT ID.

PROJECT NO.

BRIDGE NO.

DESCRIPTION	DATE

MISSOURI HIGHWAYS AND TRANSPORTATION COMMISSION

105 WEST CAPITOL
JEFFERSON CITY, MO 65102
1-888-ASK-MODOT (1-888-275-6636)

HDR Engineering, Inc.
1001 Highlands Plaza Drive
Suite 200
St. Louis, MO 63110-1337
314-425-8300
Certificate of Authority: 000856

c:\pwworking\central01\d4324513\112_EC25_JSL0021_I50_I-270.dgn 2:46:23 PM 3/25/2026

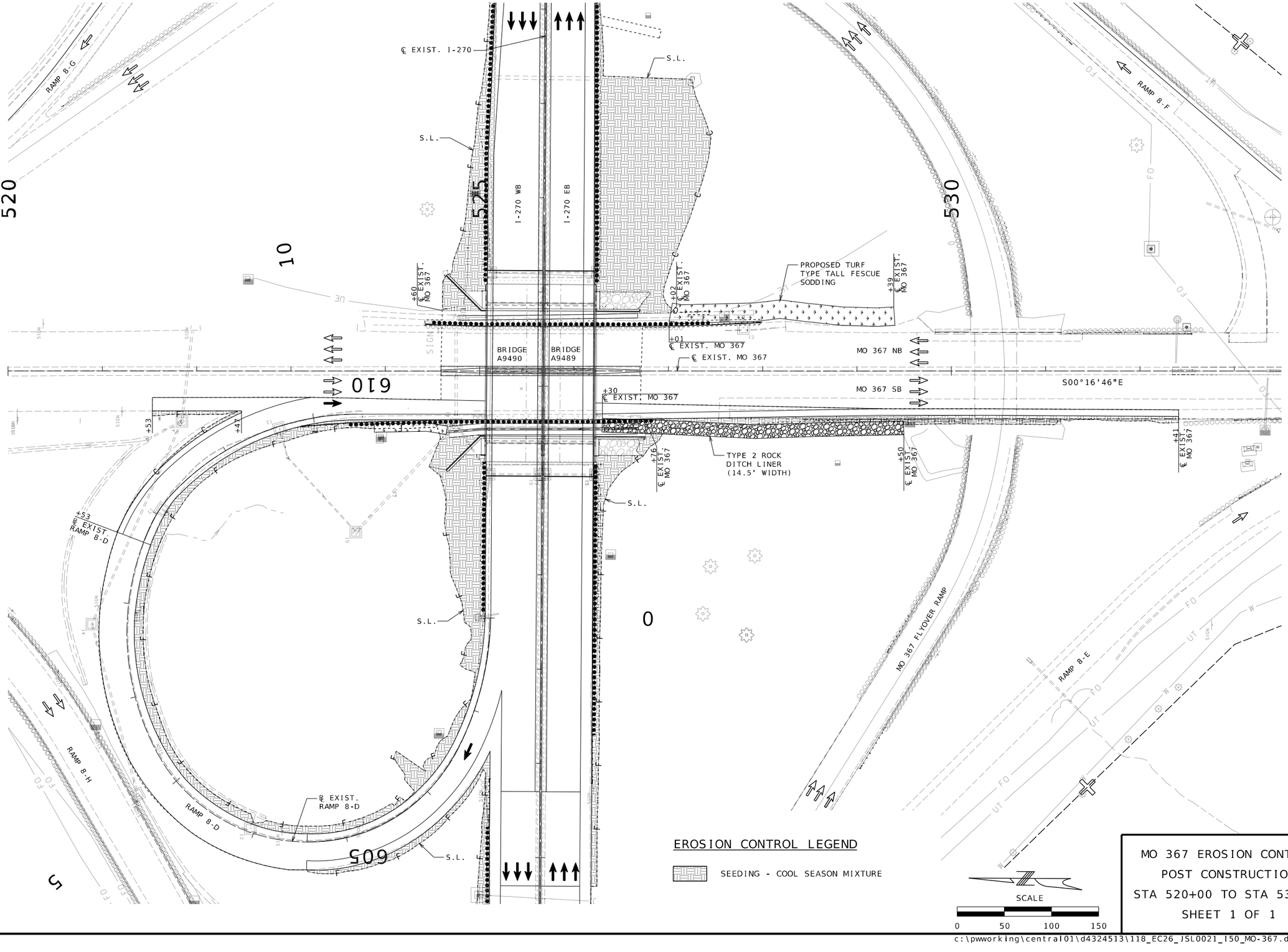

EROSION CONTROL LEGEND

SEEDING - COOL SEASON MIXTURE

SCALE

0 50 100 150

MO 367 EROSION CONTROL
POST CONSTRUCTION
STA 520+00 TO STA 533+50
SHEET 1 OF 1

STATE OF MISSOURI
EUGENE LOUD KUELKER JR.
NUMBER PE-2010008912
PROFESSIONAL ENGINEER

THIS SHEET HAS BEEN SIGNED, SEALED, AND DATED ELECTRONICALLY.

DATE PREPARED 3/25/2026

ROUTE	STATE
I-270	MO
DISTRICT	SHEET NO.
SL	118

COUNTY: ST. LOUIS
JOB NO.: JSL0021
CONTRACT ID.:
PROJECT NO.:
BRIDGE NO.:

DATE	DESCRIPTION

IF A SEAL IS PRESENT ON THIS SHEET IT HAS BEEN ELECTRONICALLY SEALED AND DATED.

MISSOURI HIGHWAYS AND TRANSPORTATION COMMISSION
105 WEST CAPITOL
JEFFERSON CITY, MO 65102
1-888-ASK-MODOT (1-888-275-6636)

HDR Engineering, Inc.
1001 Highlands Plaza Drive
Suite 200
St. Louis, MO 63110-1337
314-425-8300
Certificate of Authority: 000856

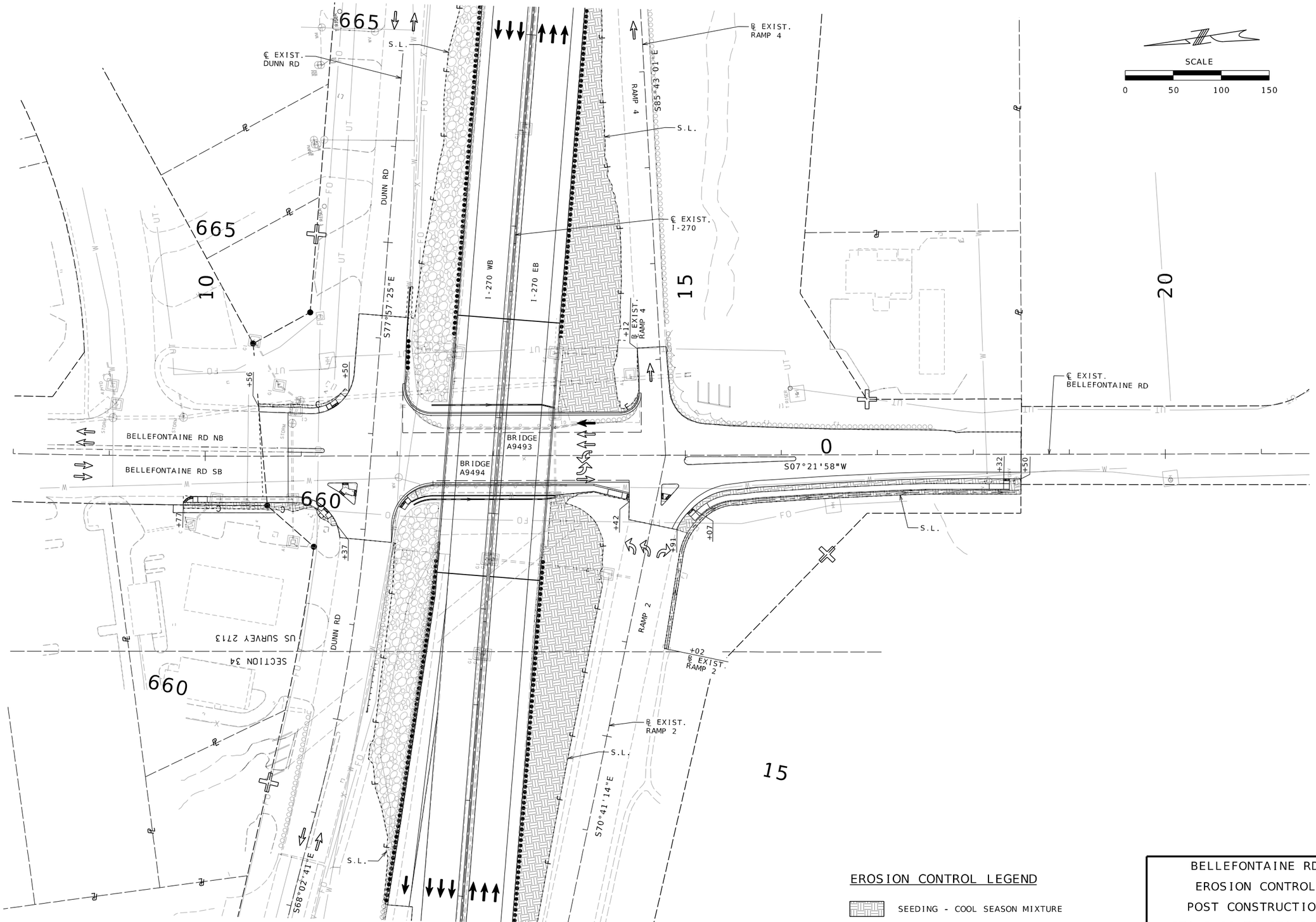

EROSION CONTROL LEGEND

SEEDING - COOL SEASON MIXTURE

BELLEFONTAINE RD
EROSION CONTROL
POST CONSTRUCTION
STA 8+00 TO STA 21+50
SHEET 1 OF 1

STATE OF MISSOURI
EUGENE LOUIS KUEKER JR.
NUMBER PE-2011009912
PROFESSIONAL ENGINEER

THIS SHEET HAS BEEN SIGNED, SEALED, AND DATED ELECTRONICALLY.

IF A SEAL IS PRESENT ON THIS SHEET IT HAS BEEN ELECTRONICALLY SEALED AND DATED.

DATE PREPARED	3/25/2026
ROUTE	STATE
I-270	MO
DISTRICT	SHEET NO.
SL	119
COUNTY	ST. LOUIS
JOB NO.	JSL0021
CONTRACT ID.	
PROJECT NO.	
BRIDGE NO.	

DESCRIPTION | DATE

MISSOURI HIGHWAYS AND TRANSPORTATION COMMISSION
105 WEST CAPITOL
JEFFERSON CITY, MO 65102
1-888-ASK-MODOT (1-888-275-6636)

HDR Engineering, Inc.
1001 Highlands Plaza Drive
Suite 200
St. Louis, MO 63110-1337
314-425-8300
Certificate of Authority: 000856

GENERAL NOTES:

1. THE HORIZONTAL STATION REFERENCE POINT (SEE DETAIL A, THIS SHEET) FOR ALL DRAINAGE STRUCTURES IS AS FOLLOWS:

TYPE A INLET	CENTER POINT OF VAULT
TYPE B INLET	CENTER POINT OF VAULT
TYPE C INLET	CENTER POINT OF VAULT
TYPE D INLET	CENTER POINT OF VAULT
TYPE E INLET	CENTER POINT OF VAULT
TYPE G INLET	CENTER POINT OF VAULT
TYPE J INLET	CENTER POINT OF VAULT
TYPE N INLET	CENTER POINT OF GRATE
EXTENSION	CENTERLINE OF PIPE
FLARED END SECTION	CENTERLINE AT PIPE CONNECTION
HEADWALL	CENTERLINE AT OUTSIDE WALL FACE
MANHOLE	CENTER POINT OF VAULT
ABANDON	CENTERLINE
SPECIAL STRUCTURE	CENTER POINT OF VAULT OR AS SPECIFIED
TYPE S INLET	CENTER POINT OF VAULT
TYPE T INLET	CENTER POINT OF VAULT
TYPE V INLET	CENTER OF STRUCTURE
TYPE W INLET	CENTER POINT OF VAULT
TYPE Y INLET	CENTER POINT OF VAULT
REMOVAL	CENTER POINT OF VAULT
PIPE COLLAR	CENTERLINE AT PIPE CONNECTION
SLOTTED DRAIN	CENTERLINE OF PIPE
MSD GRATE INLET	CENTER POINT OF VAULT (MSD STD)

2. EACH DRAINAGE SYSTEM HAS A SYSTEM IDENTIFIER SUCH AS LINE XXX-A, B, C, ETC. XXX IS THE SYSTEM OUTFALL LOCATION IN RELATION TO THE ROUNDED I-270 STATION, AS NOTED ON THE DRAINAGE PROFILE. A, B, C, ETC. ARE EACH OF THE DRAINAGE SYSTEMS THAT OUTFALL AT OR NEAR THE SAME STATION.

3. THE PIPE LENGTH SPECIFIED ON THE DRAINAGE PROFILES IS THE ACTUAL PIPE LENGTH, LP, AS SHOWN IN DETAIL A.

4. MANHOLES SHALL BE PRECAST SLAB BASE PER MODOT STD PLAN 731.00T, UNLESS OTHERWISE NOTED. SIZE IS GIVEN AS THE MANHOLE INNER DIAMETER.

5. ROCK LINING FOR CULVERTS SHALL BE APPLIED AT EACH OUTLET PER MODOT STANDARD PLAN 609.70, UNLESS OTHERWISE NOTED.

6. ALL STORM SEWER CONSTRUCTION WITHIN MODOT RIGHT OF WAY SHALL BE IN ACCORDANCE WITH PROJECT CONSTRUCTION SPECIFICATIONS AND APPLICABLE MODOT STANDARD DRAWINGS.

7. TYPE A & B GUTTERS SHALL FOLLOW PROPOSED OR EXISTING GRADES UNLESS OTHERWISE NOTED.

8. PIPE COLLARS SHALL BE PER MODOT STANDARD PLAN 604.40, UNLESS OTHERWISE NOTED.

9. ROCK DITCH LINERS SHALL BE APPLIED PER MODOT STANDARD PLAN 609.60, UNLESS OTHERWISE NOTED.

10. EXISTING CONCRETE BOX CULVERTS TO BE EXTENDED SHALL BE PER MODOT STANDARD PLAN 703.38, UNLESS OTHERWISE NOTED.

LEGEND

XXXT#	DRAINAGE STRUCTURE ID
XXX	I-270 STATION
T	TYPE OF STRUCTURE: WHERE
	A TYPE A INLET
	B TYPE B INLET
	C TYPE C INLET
	D TYPE D INLET
	S TYPE S INLET
	F FLARED END SECTION
	H HEADWALL
	M MANHOLE
	P PIPE EXTENSION AND FITTINGS
	Q SPECIAL STRUCTURE
	J GUTTER SCUPPER (SEE PLANS FOR DETAIL)
	R TEE CONNECTION
#	NUMERIC IDENTIFIER AS NEEDED TO CREATE A UNIQUE STRUCTURE NAME
_EX	EXISTING STRUCTURE
	PROPOSED ROCK LINING FOR CULVERT OUTLETS
	PROPOSED STORM DRAIN
	PROPOSED DRAINAGE DITCH/SWALE
	EXISTING STORM DRAIN
	EXISTING DRAINAGE DITCH/SWALE

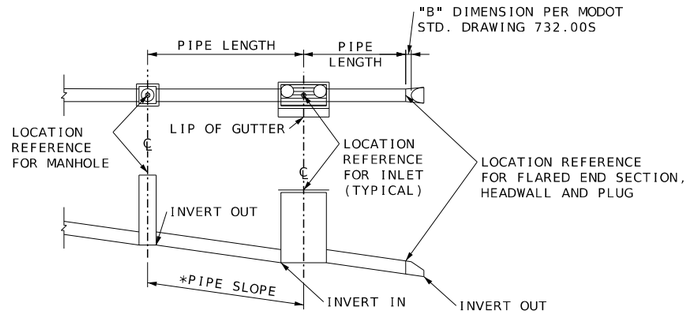

PIPE LAYOUT DETAIL

*SLOPE SHOWN IS CALCULATED FROM CENTER OF STRUCTURE TO CENTER OF STRUCTURE

DRAINAGE GENERAL NOTES SHEET

STATE OF MISSOURI
DAVID RIECHMANN
NUMBER PE-2011009548
PROFESSIONAL ENGINEER

DATE PREPARED 3/25/2026

ROUTE	STATE
I-270	MO
DISTRICT	SHEET NO.
SL	120

COUNTY ST. LOUIS

JOB NO. JSL0021

CONTRACT ID.

PROJECT NO.

BRIDGE NO.

DATE	DESCRIPTION

IF A SEAL IS PRESENT ON THIS SHEET IT HAS BEEN ELECTRONICALLY SEALED AND DATED.

MISSOURI HIGHWAYS AND TRANSPORTATION COMMISSION
105 WEST CAPITOL
JEFFERSON CITY, MO 65102
1-888-ASK-MODOT (1-888-275-6636)

HORNER SHIFRIN
401 S. 18TH ST., STE. 400 ST. LOUIS, MO 63103
314.430.1000 FAX 314.436.2686
WWW.HORNERSHIFRIN.COM
DISCIPLINE: PROFESSIONAL ENGINEERING
CERTIFICATE OF AUTHORITY: 000159
EXPIRATION DATE: DECEMBER 31, 2026

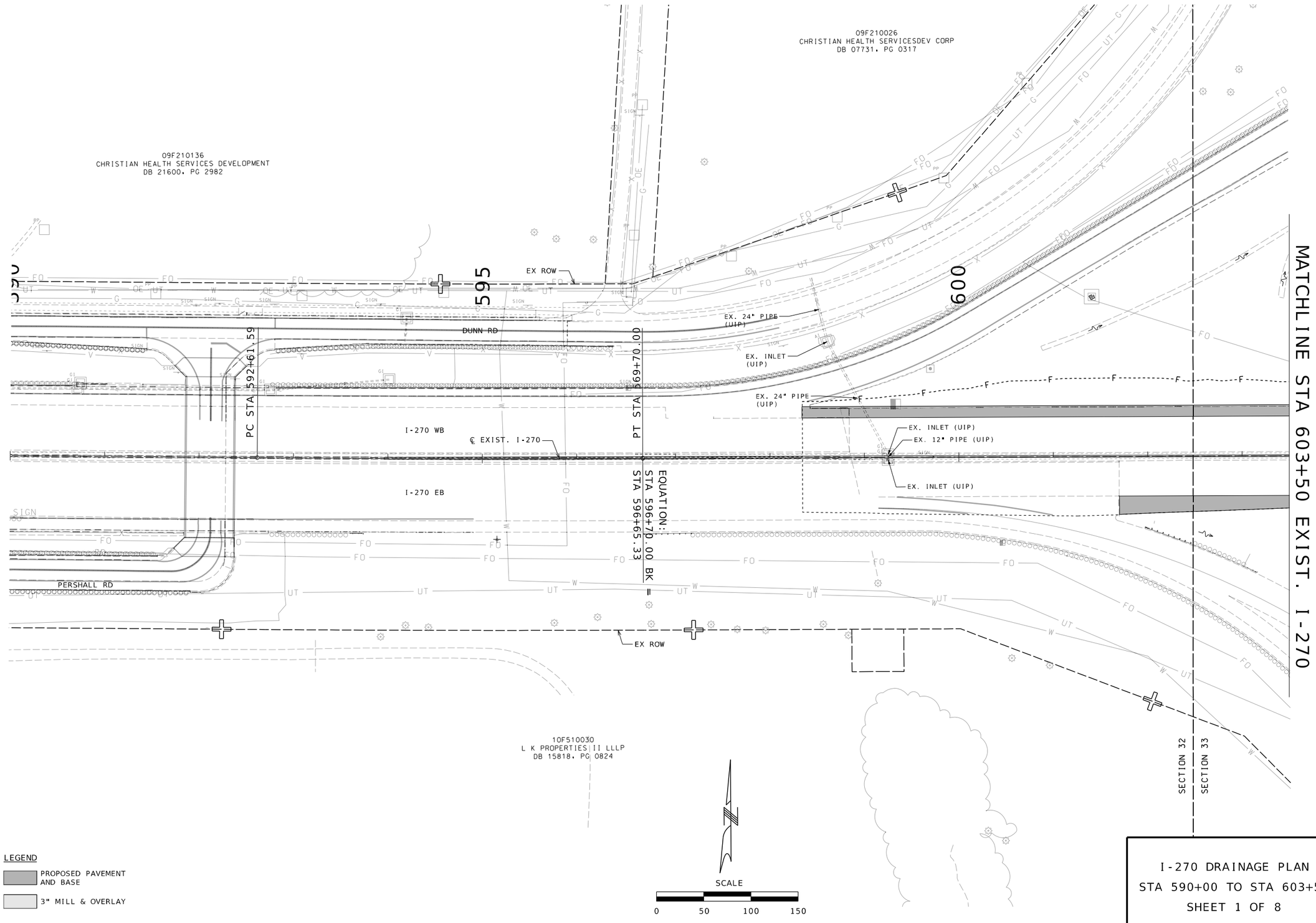

LEGEND

PROPOSED PAVEMENT AND BASE

3" MILL & OVERLAY

I-270 DRAINAGE PLAN
STA 590+00 TO STA 603+50
SHEET 1 OF 8

STATE OF MISSOURI
DAVID RIECHMANN
NUMBER
PE-2011000948
PROFESSIONAL ENGINEER

DATE PREPARED	3/25/2026
ROUTE	I-270
STATE	MO
DISTRICT	SL
SHEET NO.	121
COUNTY	ST. LOUIS
JOB NO.	JSL0021
CONTRACT ID.	
PROJECT NO.	
BRIDGE NO.	

DATE	DESCRIPTION

IF A SEAL IS PRESENT ON THIS SHEET IT HAS BEEN ELECTRONICALLY SEALED AND DATED.

MISSOURI HIGHWAYS AND TRANSPORTATION COMMISSION

MoDOT

105 WEST CAPITOL
JEFFERSON CITY, MO 65102
1-888-ASK-MODOT (1-888-275-6636)

HORNER SHIFRIN

401 S. 18TH ST., STE. 400 ST. LOUIS, MO 63103
314-531-4321 - FAX 314-531-6966
WWW.HORNERSHIFRIN.COM
DISCIPLINE: PROFESSIONAL ENGINEERING
CERTIFICATE OF AUTHORITY: 000159
EXPIRATION DATE: DECEMBER 31, 2026

c:\pwworking\central01\d4597463\002_DR01_SL0021_I50.dgn 10:28:37 AM 3/25/2026

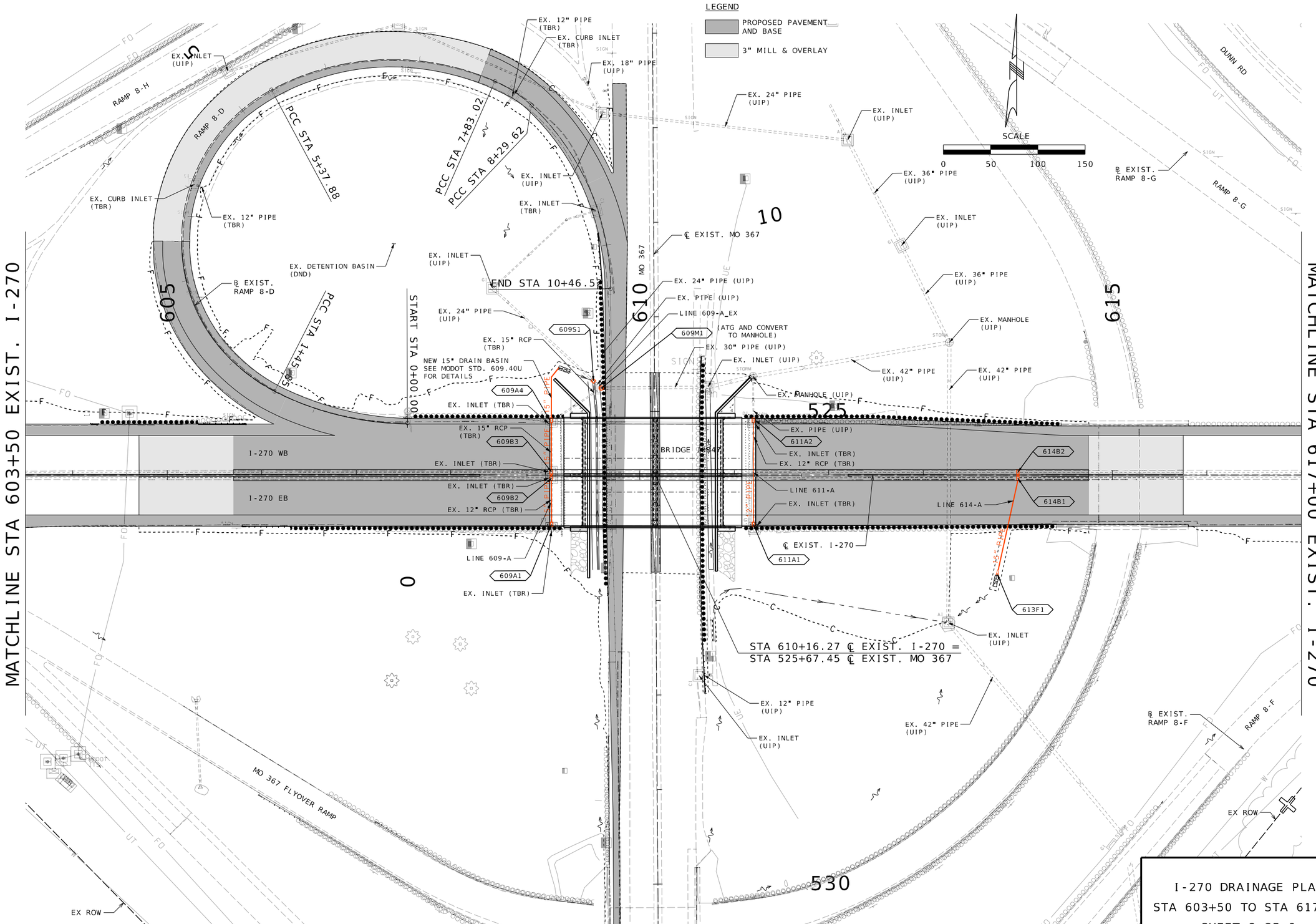

I-270 DRAINAGE PLAN
STA 603+50 TO STA 617+00
SHEET 2 OF 8

STATE OF MISSOURI
DAVID RIECHMANN
NUMBER
PE-2011000948
PROFESSIONAL ENGINEER

DATE PREPARED	3/25/2026
ROUTE	I-270
STATE	MO
DISTRICT	SL
SHEET NO.	122
COUNTY	ST. LOUIS
JOB NO.	JSL0021
CONTRACT ID.	
PROJECT NO.	
BRIDGE NO.	

DESCRIPTION

DATE

MISSOURI HIGHWAYS AND TRANSPORTATION COMMISSION

MoDOT

105 WEST CAPITOL
JEFFERSON CITY, MO 65102
1-888-ASK-MODOT (1-888-275-6636)

HORNER SHIFRIN

401 S. 18TH ST., STE. 400 ST. LOUIS, MO 63103
314-531-4321 • FAX 314-531-6966
WWW.HORNERSHIFRIN.COM
DISCIPLINE: PROFESSIONAL ENGINEERING
CERTIFICATE OF AUTHORITY: 000159
EXPIRATION DATE: DECEMBER 31, 2026

IF A SEAL IS PRESENT ON THIS SHEET IT HAS BEEN ELECTRONICALLY SEALED AND DATED.

c:\pwworking\central01\d4597463\003_DR02_SL0021_I50.dgn 10:28:44 AM 3/25/2026

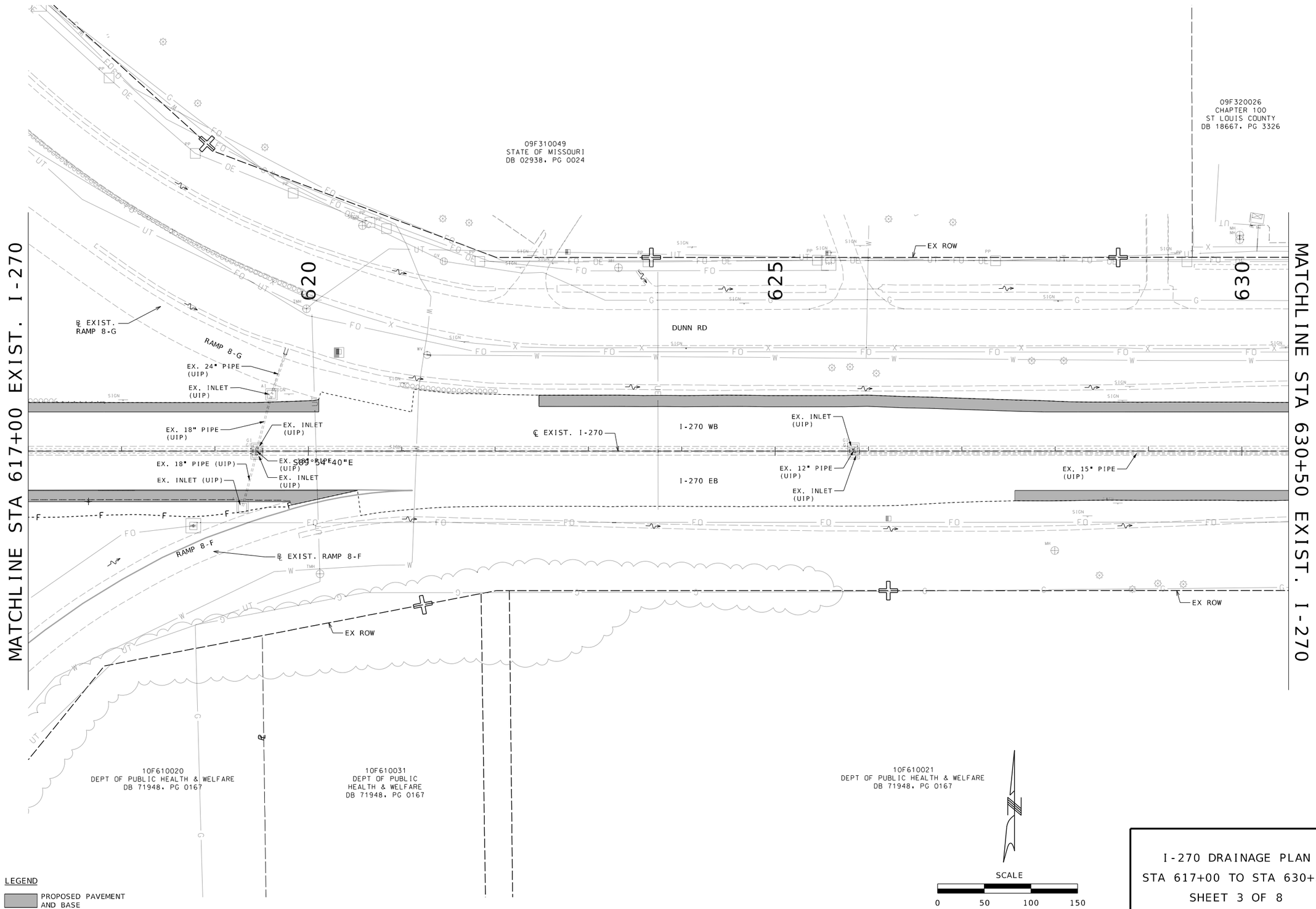

LEGEND

PROPOSED PAVEMENT AND BASE

I-270 DRAINAGE PLAN
STA 617+00 TO STA 630+50
SHEET 3 OF 8

STATE OF MISSOURI
DAVID RIECHMANN
NUMBER
PE-2011000948
PROFESSIONAL ENGINEER

DATE PREPARED	3/25/2026
ROUTE	I-270
STATE	MO
DISTRICT	SL
SHEET NO.	123
COUNTY	ST. LOUIS
JOB NO.	JSL0021
CONTRACT ID.	
PROJECT NO.	
BRIDGE NO.	

DATE	DESCRIPTION

IF A SEAL IS PRESENT ON THIS SHEET IT HAS BEEN ELECTRONICALLY SEALED AND DATED.

MISSOURI HIGHWAYS AND TRANSPORTATION COMMISSION

MoDOT

105 WEST CAPITOL
JEFFERSON CITY, MO 65102
1-888-ASK-MODOT (1-888-275-6636)

HORNER SHIFRIN

401 S. 18TH ST., STE. 400 ST. LOUIS, MO 63103
314-531-4321 - FAX 314-531-6966
WWW.HORNERSHIFRIN.COM
DISCIPLINE: PROFESSIONAL ENGINEERING
CERTIFICATE OF AUTHORITY: 000159
EXPIRATION DATE: DECEMBER 31, 2026

c:\pwworking\central01\d4597463\004_DR03_SL0021_I50.dgn 10:28:52 AM 3/25/2026

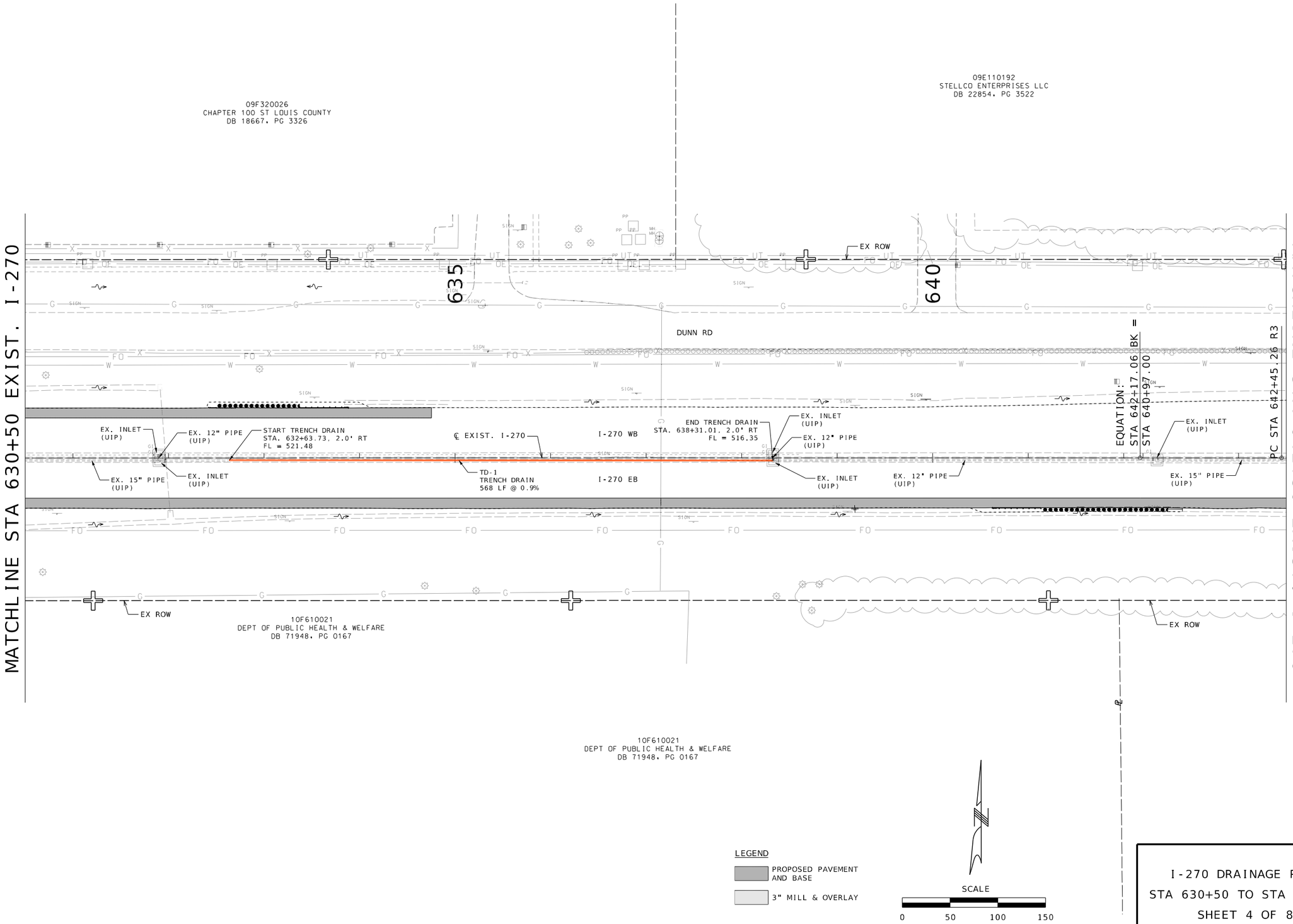

I-270 DRAINAGE PLAN
STA 630+50 TO STA 642+50
SHEET 4 OF 8

STATE OF MISSOURI
DAVID RIECHMANN
NUMBER
PE-2011000948
PROFESSIONAL ENGINEER

DATE PREPARED	3/25/2026
ROUTE	I-270
STATE	MO
DISTRICT	SL
SHEET NO.	124
COUNTY	ST. LOUIS
JOB NO.	JSL0021
CONTRACT ID.	
PROJECT NO.	
BRIDGE NO.	

DATE	DESCRIPTION

MISSOURI HIGHWAYS AND TRANSPORTATION COMMISSION

MoDOT

105 WEST CAPITOL
JEFFERSON CITY, MO 65102
1-888-ASK-MODOT (1-888-275-6636)

HORNER SHIFRIN

401 S. 18TH ST., STE. 400 ST. LOUIS, MO 63103
314-531-4321 - FAX 314-531-6966
WWW.HORNERSHIFRIN.COM
DISCIPLINE: PROFESSIONAL ENGINEERING
CERTIFICATE OF AUTHORITY: 000159
EXPIRATION DATE: DECEMBER 31, 2026

IF A SEAL IS PRESENT ON THIS SHEET IT HAS BEEN ELECTRONICALLY SEALED AND DATED.

c:\pwworking\central01\d4597463\005_DR04_SL0021_I50.dgn 10:29:00 AM 3/25/2026

09E110192
STELLCO ENTERPRISES LLC
DB 22854, PG 3522

10E430061
1703 DUNN LLC
DB 20575, PG 1285

10E430050
BESSELMAN KAREN ETAL
DB 18642, PG 4266

10E430041
BESSELMAN KAREN ETAL
DB 18642, PG 4266

10E430023
BESSELMAN KAREN ETAL
DB 18642, PG 4266

10E440107
BESSELMAN KAREN ETAL
DB 18642, PG 4266

10E440235
HWRT MANAGEMENT
COMPANY LLC
DB 17655, PG 3858

10E440244
DDI MEDIA
DB 18041, PG 2004

SECTION 33

SECTION 34

DUNN RD

MATCHLINE STA 642+50 EXIST. I-270

MATCHLINE STA 656+00 EXIST. I-270

650

655

EX. INLET (UIP)

EX. 12" PIPE (UIP)

EX. 24" PIPE (UIP)

EX. 15" PIPE (UIP)

EX. 18" PIPE (UIP)

℄ EXIST. I-270

I-270 WB

I-270 EB

S68°02'41"E

PT STA 12+19.62 R3

65582_EX (ATG)

65581_EX (ATG)

S82°15'31"E

START STA 0+00.00

PT STA 3+81.22

PC STA 5+82.60

PT STA 10+55.74

EX ROW

RAMP 2

℄ EXIST. RAMP 2

0

5

10

1OF610021
DEPT OF PUBLIC HEALTH & WELFARE
DB 71948, PG 0167

10E420031
DEPT OF PUBLIC HEALTH & WELFARE
DB 71948, PG 0167

SCALE
0 50 100 150

LEGEND
PROPOSED PAVEMENT AND BASE
3" MILL & OVERLAY

I-270 DRAINAGE PLAN
STA 642+50 TO STA 656+00
SHEET 5 OF 8

STATE OF MISSOURI
DAVID RIECHMANN
NUMBER PE-2011000948
PROFESSIONAL ENGINEER

DATE PREPARED
3/25/2026

ROUTE	STATE
I-270	MO
DISTRICT	SHEET NO.
SL	125

COUNTY
ST. LOUIS

JOB NO.
JSL0021

CONTRACT ID.

PROJECT NO.

BRIDGE NO.

DESCRIPTION	DATE

IF A SEAL IS PRESENT ON THIS SHEET IT HAS BEEN ELECTRONICALLY SEALED AND DATED.

MISSOURI HIGHWAYS AND TRANSPORTATION COMMISSION
105 WEST CAPITOL
JEFFERSON CITY, MO 65102
1-888-ASK-MODOT (1-888-275-6636)

HORNER SHIFRIN
401 S. 18TH ST., STE. 400 ST. LOUIS, MO 63103
314-241-1976 FAX 314-241-1988
WWW.HORNERSHIFRIN.COM
DISCIPLINE: PROFESSIONAL ENGINEERING
CERTIFICATE OF AUTHORITY: 000159
EXPIRATION DATE: DECEMBER 31, 2026

MATCHLINE STA 656+00 EXIST. I-270

MATCHLINE STA 669+50 EXIST. I-270

10E440060
HUSTON KENNETH L ETAL
DB 6882, PG 1345

10E440262
CROSS FAMILY REAL ESTATE
LIMITED PARTNERSHIP
DB 17018, PG 2747

10E440253
FRANKE RUTH
TRUSTEE
DB 16018, PG 0899

10E440271
DARYA TAL PC LLC
DB 24378, PG 2942

10E440033
WALLIS OIL CO INC
DB 16830, PG 1072

10E530114
AMI KUSH INC
DB 20965, PG 1096

10E530453
EXCHANGE RIGHT
NET LEASED
PORTFLIO 39 DST
DB 241388, PG 82

10E530051
D&T COLE
PROPERTIES LLC
DB 17196, PG 2965

10E530444
RJCA LLC
DB 22216, PG 796

10E440161
JOE'S SPH LLC
DB 20448, PG 1133

10E440170
CIRCLE OF LIGHT CHURCH
DB 18541, PG 2648

10E420031
DEPT OF PUBLIC HEALTH & WELFARE
DB 71948, PG 0167

EX ROW

PC STA 658+50.17

SECTION 34
US SURVEY 2713

BELLEFONTAINE RD

PT STA 662+18.38

PT STA 10+78.25

POT STA 665+27.18

DUNN RD

℄ EXIST. BELLEFONTAINE RD

℄ EXIST. I-270

℄ EXIST. RAMP 2

℄ EXIST. RAMP 4

PC STA 7+79.06

RAMP 2

RAMP 4

10T3_EX (ATG)

10T1_EX (ATG)

10T2_EX (ATG)

EX. INLET (UIP)

EX. INLET (TBR)

NEW 12" DRAIN BASIN
SEE MODOT STD. 609.40U
FOR DETAILS

NEW PAVED DITCH

LINE 658-B

LINE 657-A

LINE 658-A

LINE 13-A

LINE 13-C

LINE 13-B

LINE 664-B

NEW 12" PIPE

NEW 15" PIPE

EX. 12" PIPE (TBR)

EX. 12" PIPE (UIP)

EX. 12" PIPE (UIP)

EX. 15" PIPE (UIP)

EX. 18" PIPE (UIP)

EX. 42" PIPE (UIP)

EX. PIPE (TBR)

EX. FES (TBR)

15" PIPE

12" PIPE

I-270 WB

I-270 EB

BRIDGE A02

STA 660+60.39 ℄ EXIST. I-270 =
STA 13+04.79 ℄ EXIST. BELLEFONTAINE RD

STA 17+98.89 ℄ EXIST. RAMP 2 =
STA 14+79.56 ℄ EXIST. BELLEFONTAINE RD

STA 0+00.00 ℄ EXIST. RAMP 4 =
STA 14+79.56 ℄ EXIST. BELLEFONTAINE RD

LEGEND

PROPOSED PAVEMENT AND BASE

3" MILL & OVERLAY

SCALE

0 50 100 150

I-270 DRAINAGE PLAN
STA 656+00 TO STA 669+50
SHEET 6 OF 8

STATE OF MISSOURI
DAVID RECHMANN
NUMBER PE-2011009048
PROFESSIONAL ENGINEER

DATE PREPARED
3/25/2026

ROUTE	STATE
I-270	MO
DISTRICT	SHEET NO.
SL	126

COUNTY
ST. LOUIS

JOB NO.
JSL0021

CONTRACT ID.

PROJECT NO.

BRIDGE NO.

DATE	DESCRIPTION

IF A SEAL IS PRESENT ON THIS SHEET IT HAS BEEN ELECTRONICALLY SEALED AND DATED.

MISSOURI HIGHWAYS AND TRANSPORTATION COMMISSION

105 WEST CAPITOL
JEFFERSON CITY, MO 65102
1-888-ASK-MODOT (1-888-275-6636)

HORNER SHIFRIN

401 S. 18TH ST., STE. 400 ST. LOUIS, MO 63103
314.241.1976 FAX 314.241.1988
WWW.HORNERSHIFRIN.COM

DISCIPLINE: PROFESSIONAL ENGINEERING
CERTIFICATE OF AUTHORITY: 000159
EXPIRATION DATE: DECEMBER 31, 2026

c:\pwworking\central01\d4597463\007_DR06_SL0021_I50.dgn 10:29:14 AM 3/25/2026

MATCHLINE STA 669+50 EXIST. I-270

MATCHLINE STA 683+00 EXIST. I-270

10E530392
270 PROPERTIES LLC
DB 19646, PG 3156

10E530444
RJCA LLC
DB 22216, PG 796

10E530013
CRYSTAL FOODS
& GAS INC
DB 17973, PG 1260

10E530031
CRYSTAL FOODS
& GAS INC
DB 17973, PG 1260

10E530316
S S & CO OF
DUNN STREET INC
DB 17688, PG 3606

10E540072
PFITZNER EBERHARD
REV LIVING TRUST
DB 21885, PG 410

10E540061
ADAMS JOHN G
PATRICIA A H/W
DB 08611, PG 2437

10E540050
MASON DONNY RAY
& JO ANN H/W
DB 21734, PG 1624

10E540032
BUSKEN CONSTRUCTION
COMPANY
DB 13571, PG 2060

EX ROW

670

675

689

DUNN RD

EX. INLET
(UIP)

START TRENCH DRAIN
STA. 670+56.36, 3.7' RT
FL = 487.89

EX. 18" PIPE
(UIP)

EX. INLET
(UIP)

EX. 18" PIPE
(UIP)

TD-2
TRENCH DRAIN
495 LF @ 0.8%

℄ EXIST. I-270

EX. INLET
(UIP)

EX. 12" PIPE
(UIP)

END TRENCH DRAIN
STA. 675+50.58, 3.7' RT
FL = 483.80

I-270 WB

EX. 18" PIPE
(UIP)

I-270 EB

EX. INLET
(UIP)

EX. INLET
(UIP)

EX. 18" PIPE
(UIP)

EX. 12" PIPE
(UIP)

EX. INLET
(UIP)

EX. INLET
(UIP)

EX. 12" PIPE
(UIP)

EX. 12" PIPE
(UIP)

℄ EXIST. RAMP 4

PT STA 10+00.80

END STA 14+10.80

10

US SURVEY 2713

US SURVEY 112

PERSHALL RD

EX ROW

10E510163
RAFTERY GREGORY D
DB 21965, PG 348

10E520074
B&P PARTNERSHIP LLC
DB 18041, PG 1287

10E520113
WEISE MICHAEL G
& MCLAUGHLIN SUSAN H/W TRS
DB 17818, PG 1039

10E510163
RAFTERY GREGORY D
DB 21965, PG 354

10E520063
RAFTERY GREGORY D
DB 21472, PG 3523

10E510174
GRAVES RONALD R
DB 17989, PG 684

10E510204
KNICHEL JAMES RICHARDSON
& MARY LEE H
DB 6372, PG 2018

SCALE
0 50 100 150

LEGEND
PROPOSED PAVEMENT AND BASE
3" MILL & OVERLAY

I-270 DRAINAGE PLAN
STA 669+50 TO STA 683+00
SHEET 7 OF 8

IF A SEAL IS PRESENT ON THIS SHEET IT HAS BEEN ELECTRONICALLY SEALED AND DATED.

STATE OF MISSOURI
DAVID RIECHMANN
NUMBER PE-2011005948
PROFESSIONAL ENGINEER

DATE PREPARED: 3/25/2026
ROUTE: I-270 | STATE: MO
DISTRICT: SL | SHEET NO.: 127
COUNTY: ST. LOUIS
JOB NO.: JSL0021
CONTRACT ID.:
PROJECT NO.:
BRIDGE NO.:

DATE	DESCRIPTION

MISSOURI HIGHWAYS AND TRANSPORTATION COMMISSION
105 WEST CAPITOL
JEFFERSON CITY, MO 65102
1-888-ASK-MODOT (1-888-275-6636)

HORNER SHIFRIN
401 S. 18TH ST., STE. 400 ST. LOUIS, MO 63103
314-241-1976 FAX 314-241-1988
SHWEB.COM
DISCIPLINE: PROFESSIONAL ENGINEERING
CERTIFICATE OF AUTHORITY: 000159
EXPIRATION DATE: DECEMBER 31, 2026

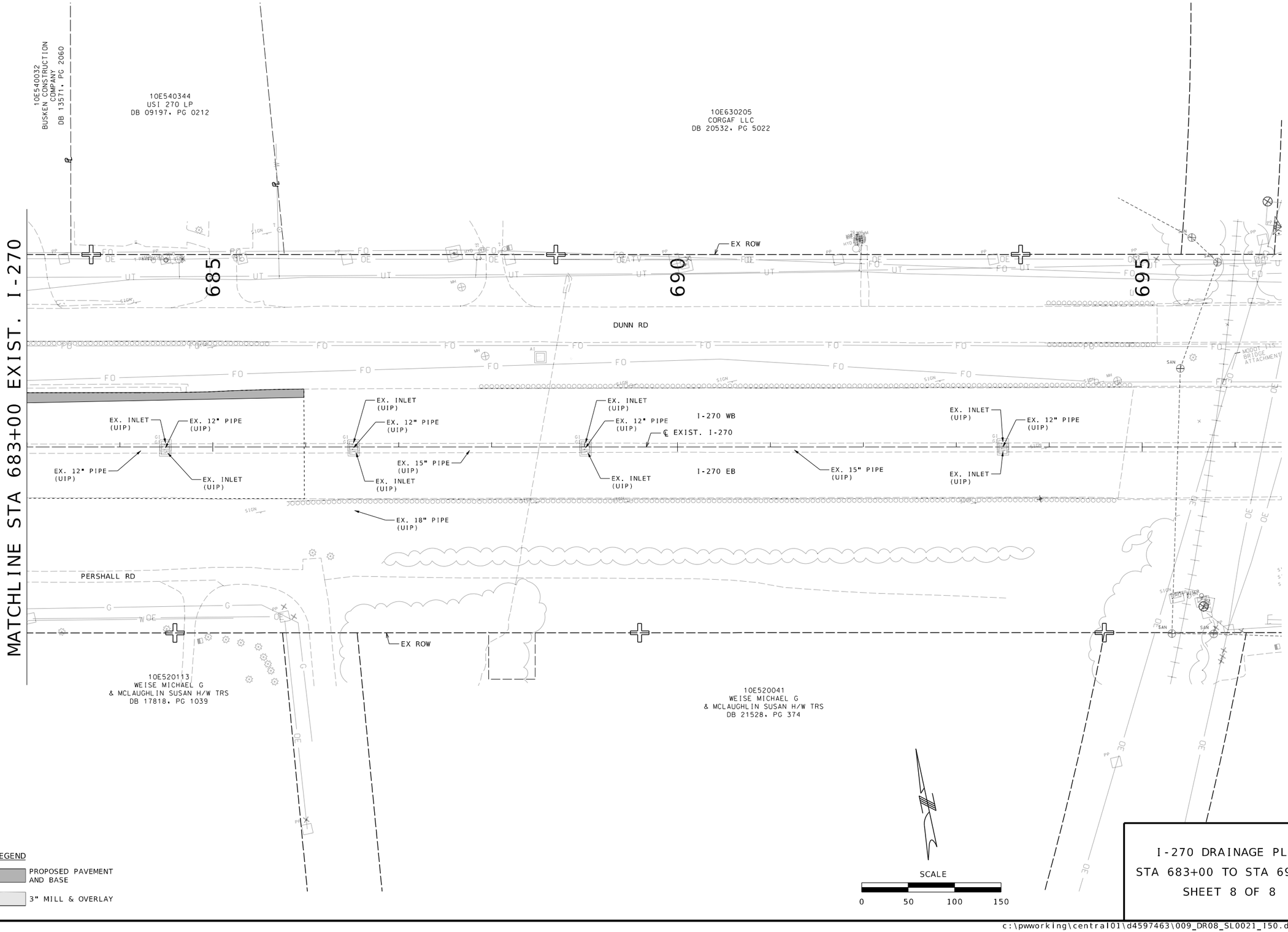

I-270 DRAINAGE PLAN
STA 683+00 TO STA 696+50
SHEET 8 OF 8

STATE OF MISSOURI
DAVID RIECHMANN
NUMBER PE-2011009948
PROFESSIONAL ENGINEER

DATE PREPARED
3/25/2026

ROUTE	STATE
I-270	MO
DISTRICT	SHEET NO.
SL	128

COUNTY
ST. LOUIS

JOB NO.
JSL0021

CONTRACT ID.

PROJECT NO.

BRIDGE NO.

DESCRIPTION	DATE

IF A SEAL IS PRESENT ON THIS SHEET IT HAS BEEN ELECTRONICALLY SEALED AND DATED.

MISSOURI HIGHWAYS AND TRANSPORTATION COMMISSION
105 WEST CAPITOL
JEFFERSON CITY, MO 65102
1-888-ASK-MODOT (1-888-275-6636)

HORNER SHIFRIN
401 S. 18TH ST., STE. 400 ST. LOUIS, MO 63103
314-241-1020 FAX: 314-241-1666
WWW.HORNERSHIFRIN.COM
DISCIPLINE: PROFESSIONAL ENGINEERING
CERTIFICATE OF AUTHORITY: 000159
EXPIRATION DATE: DECEMBER 31, 2026

LEGEND

PROPOSED PAVEMENT AND BASE

3" MILL & OVERLAY

614B2 | LINE 614-A | 613F1 | 614B1 | NEW 15" PIPE | EX. 42" PIPE (UIP) | EX. MANHOLE (UIP) | EX. 36" PIPE (UIP) | EX. INLET (UIP) | EX. 36" PIPE (UIP) | EX. INLET (UIP) | ℄ EXIST. I-270 | I-270 WB | I-270 EB | EX. INLET (UIP) | END V-DITCH STA. 613+26.36, 156.1' RT. EL. 550.33 | EX ROW | ℄ EXIST. RAMP 8-F | RAMP 8-F | RAMP 8-G

525 | 530 | 10 | 610 | 605 | 0

EX. INLET (TBR) | 611A2 | EX. MANHOLE (UIP) | EX. INLET (UIP) | EX. 30" PIPE (UIP) | EX. 24" PIPE (UIP) | (ATG AND CONVERT TO MANHOLE) | 609M1 | LINE 609-A_EX | EX. PIPE (UIP) | EX. 24" PIPE (UIP) | EX. 12" RCP (TBR) | LINE 611-A | EX. INLET (TBR) | 611A1 | BEGIN V-DITCH STA. 610+79.80, 134.7' RT. EL. 550.50 | EX. 12" PIPE (UIP) | EX. INLET (UIP) | ℄ EXIST. MO 367 | MO 367 NB | MO 367 SB | S00°16'46"E | STA 610+16.27 ℄ EXIST. I-270 = STA 525+67.45 ℄ EXIST. MO 367 | BRIDGE NO. 08054

EX. INLET (UIP) | EX. INLET (TBR) | EX. 18" PIPE (UIP) | EX. INLET (TBR) | EX. 12" PIPE (TBR) | PCC STA 8+29.62 | PCC STA 7+83.02 | EX. FES (TBR) | EX. 18" PIPE (UIP) | EX. INLET (UIP) | EX. 18" PIPE (UIP) | PCC STA 5+37.88 | EX. INLET (UIP) | EX. 12" PIPE (TBR) | ℄ EXIST. RAMP 8-D | RAMP 8-D | RAMP 8-H | EX. CURB INLET (TBR)

609S1 | EX. 15" RCP (TBR) | END STA 10+46.5 | EX. INLET (UIP) | EX. 24" PIPE (UIP) | NEW 15" DRAIN BASIN SEE MODOT STD. 609.40U FOR DETAILS | 609A4 | EX. INLET (TBR) | EX. 15" RCP (TBR) | 609B3 | EX. INLET (TBR) | START STA 0+00.00 | EX. 12" RCP (TBR) | EX. INLET (TBR) | 609A1 | LINE 609-A | 609B2 | EX. INLET (TBR) | PCC STA 1+45.85

MO 367 FLYOVER RAMP | RAMP 8-E | EX ROW

SCALE

0 50 100 150

MO 367 DRAINAGE PLAN
STA 520+00 TO STA 533+50
SHEET 1 OF 1

STATE OF MISSOURI
DAVID RIECHMANN
NUMBER PE-2011000948
PROFESSIONAL ENGINEER

DATE PREPARED 3/25/2026

ROUTE	STATE
I-270	MO
DISTRICT	SHEET NO.
SL	129

COUNTY ST. LOUIS

JOB NO. JSL0021

CONTRACT ID.

PROJECT NO.

BRIDGE NO.

DATE	DESCRIPTION

IF A SEAL IS PRESENT ON THIS SHEET IT HAS BEEN ELECTRONICALLY SEALED AND DATED.

MISSOURI HIGHWAYS AND TRANSPORTATION COMMISSION
105 WEST CAPITOL
JEFFERSON CITY, MO 65102
1-888-ASK-MODOT (1-888-275-6636)

HORNER SHIFRIN
401 S. 18TH ST., STE. 400 ST. LOUIS, MO 63103
314-241-1976 FAX 314-241-1988
WWW.HORNERSHIFRIN.COM
DISCIPLINE: PROFESSIONAL ENGINEERING
CERTIFICATE OF AUTHORITY: 000159
EXPIRATION DATE: DECEMBER 31, 2026

c:\pwworking\central01\d4597463\010_DR09_SL0021_I50.dgn 10:29:37 AM 3/25/2026

SCALE
0 50 100 150

LEGEND
PROPOSED PAVEMENT AND BASE
3" MILL & OVERLAY

10E530282
WALLIS OIL CO INC
DB 18177, PG 0633

10E440033
WALLIS OIL CO INC
DB 16830, PG 0072

10E440192
FOX SAMUEL TRUSTEE
DB 10316, PG 1387

10E440024
WALLIS OIL CO INC
DB 16845, PG 0689

10E440262
CROSS FAMILY REAL ESTATE LIMITED PARTNERSHIP
DB 17018, PG 2747

10E440060
HUSTON KENNETH L ETAL
DB 6882, PG 1345

10E440273
FRANKE RUTH TRUSTEE
DB 16018, PG 0899

10E440170
CIRCLE OF LIGHT CHURCH
DB 18541, PG 2648

10E440161
JOE'S SPH LLC
DB 20448, PG 1133

POT STA 665+27.18

PT STA 662+18.20

PT STA 10+78.25

PC STA 658+80.17

STA 660+60.39 ℄ EXIST. I-270 =
STA 13+04.79 ℄ EXIST. BELLEFONTAINE RD

STA 0+00.00 ℄ EXIST. RAMP 4 =
STA 14+79.56 ℄ EXIST. BELLEFONTAINE RD

START STA 0+00.00

END STA 17+98.89

STA 17+98.89 ℄ EXIST. RAMP 2 =
STA 14+79.56 ℄ EXIST. BELLEFONTAINE RD

℄ EXIST. I-270

℄ EXIST. BELLEFONTAINE RD

BELLEFONTAINE RD NB

BELLEFONTAINE RD SB

DUNN RD

BRIDGE ABUT

EX ROW

EX. 15" PIPE (UIP)

NEW 12" PIPE

LINE 664-B

664B1

664B2

661B2

661B1

NEW 12" DRAIN BASIN
SEE MODOT STD. 609.40U
FOR DETAILS

EX. INLET (TBR)

EX. INLET (UIP)

EX. 42" PIPE (UIP)

13S2

EX. 15" PIPE (UIP)

EX. INLET (TBR)

13C4

13C6

NEW 15" PIPE

LINE 13-B

LINE 13-A

NEW 15" PIPE

LINE 13-C

13C11

13C5

EX. 15" PIPE (UIP)

NEW 15" PIPE

13C3

EX. 15" PIPE (UIP)

13S1

EX. INLET (UIP)

EX. FES (TBR)

EX. PIPE (TBR)

NEW PAVED DITCH

EX. INLET (TBR)

EX. 12" PIPE (TBR)

EX. INLET (TBR)

EX. 12" PIPE (TBR)

EX. INLET (TBR)

EX. 12" PIPE (TBR)

658B2

LINE 658-B

NEW 12" PIPE

658B1

LINE 658-A

658F1

EX. 12" PIPE (UIP)

657B4

LINE 657-A

657B3

NEW 12" PIPE

EX. 12" PIPE (UIP)

657B2

657B1

NEW 12" PIPE

EX. 12" PIPE (UIP)

10T2_EX (ATG)

10T1_EX (ATG)

BELLEFONTAINE RD
DRAINAGE PLAN
STA 8+00 TO STA 21+50
SHEET 1 OF 1

STATE OF MISSOURI
DAVID RIECHMANN
NUMBER PE-2011000948
PROFESSIONAL ENGINEER

DATE PREPARED	
3/25/2026	
ROUTE	STATE
I-270	MO
DISTRICT	SHEET NO.
SL	130
COUNTY	
ST. LOUIS	
JOB NO.	
JSL0021	
CONTRACT ID.	
PROJECT NO.	
BRIDGE NO.	

IF A SEAL IS PRESENT ON THIS SHEET IT HAS BEEN ELECTRONICALLY SEALED AND DATED.

DATE	DESCRIPTION

MISSOURI HIGHWAYS AND TRANSPORTATION COMMISSION
105 WEST CAPITOL
JEFFERSON CITY, MO 65102
1-888-ASK-MODOT (1-888-275-6636)

HORNER SHIFRIN
401 S. 18TH ST., STE. 400 ST. LOUIS, MO 63103
314-241-1976 FAX 314-241-1988
WWW.HORNERSHIFRIN.COM
DISCIPLINE: PROFESSIONAL ENGINEERING
CERTIFICATE OF AUTHORITY: 000159
EXPIRATION DATE: DECEMBER 31, 2026

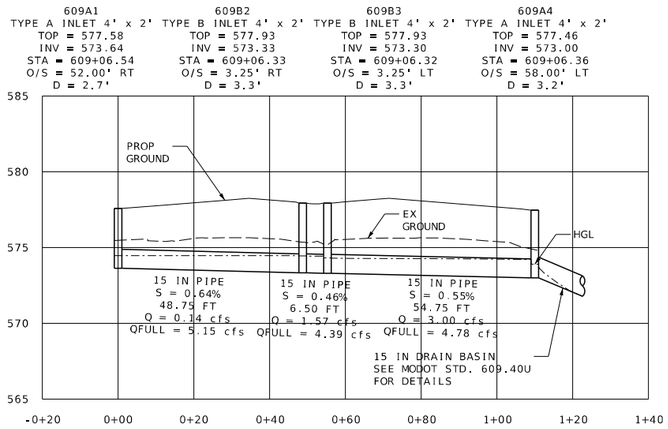

LINE 609-A

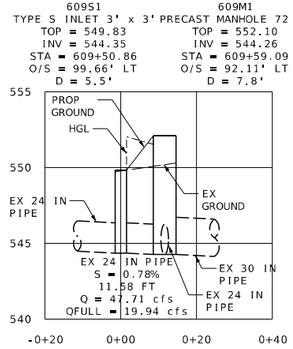

LINE 609-A_EX

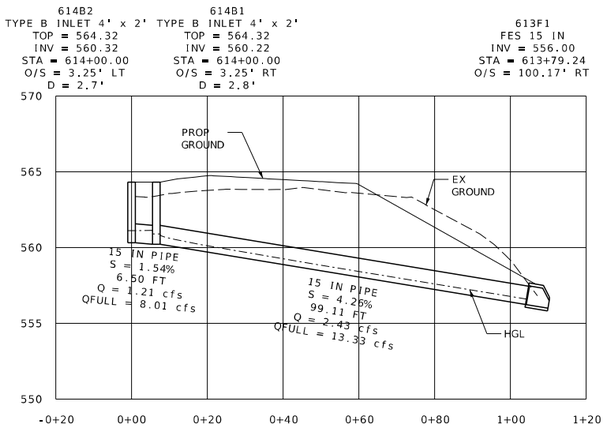

LINE 614-A

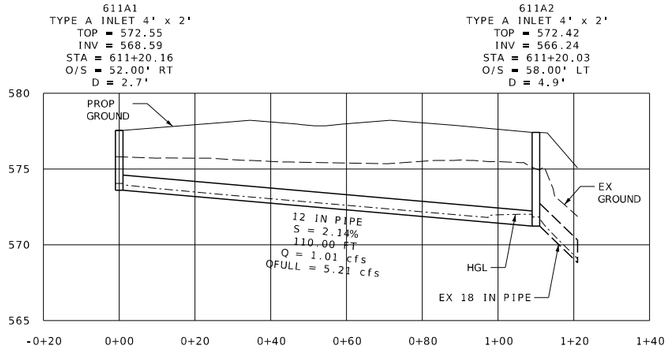

LINE 611-A

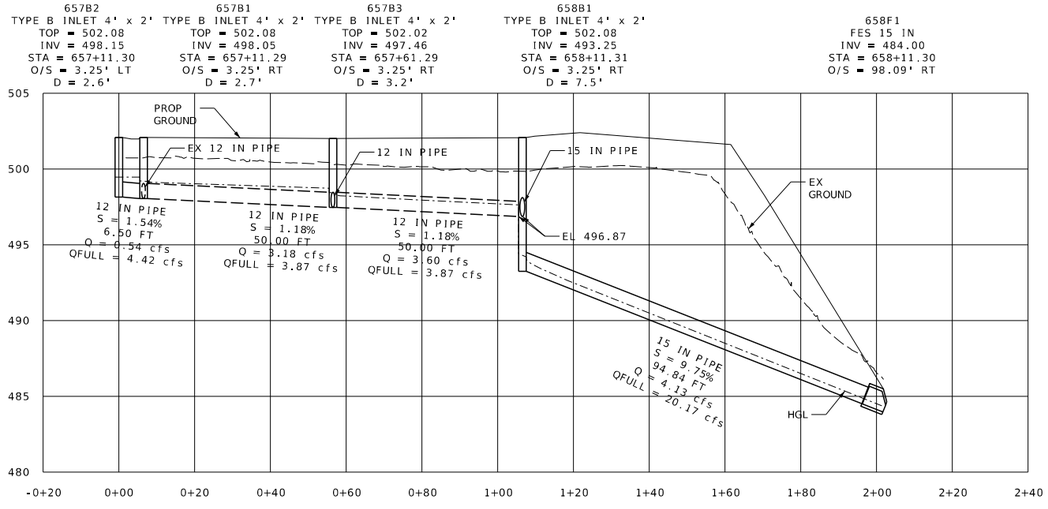

LINE 658-A

NOTES:
1) ALL PIPES TO BE GROUP A UNLESS OTHERWISE NOTED.
2) REFER TO PIPE LAYOUT DETAIL ON DRAINAGE GENERAL NOTES SHEET.
3) ALL SEWERS SHOWN SHALL BE MAINTAINED BY MODOT UNLESS OTHERWISE NOTED.
4) INLET STRUCTURE BASE TO BE SIZED APPROPRIATELY FOR INCOMING AND OUTGOING PIPES. SHOP DRAWINGS TO BE PROVIDED PRIOR TO CONSTRUCTION.

I-270 DRAINAGE PROFILES
SHEET 1 OF 2

STATE OF MISSOURI
DAVID RIECHMANN
NUMBER PE-2011000948
PROFESSIONAL ENGINEER

DATE PREPARED
3/25/2026

ROUTE	STATE
I-270	MO
DISTRICT	SHEET NO.
SL	131

COUNTY
ST. LOUIS

JOB NO.
JSL0021

CONTRACT ID.

PROJECT NO.

BRIDGE NO.

DATE	DESCRIPTION

IF A SEAL IS PRESENT ON THIS SHEET IT HAS BEEN ELECTRONICALLY SEALED AND DATED.

MISSOURI HIGHWAYS AND TRANSPORTATION COMMISSION
105 WEST CAPITOL
JEFFERSON CITY, MO 65102
1-888-ASK-MODOT (1-888-275-6636)

HORNER & SHIFRIN
401 S. 18TH ST., STE. 400 ST. LOUIS, MO 63103
314-241-1976 FAX 314-241-1988
WWW.HORNERSHIFRIN.COM
DISCIPLINE: PROFESSIONAL ENGINEERING
CERTIFICATE OF AUTHORITY: 000159
EXPIRATION DATE: DECEMBER 31, 2026

c:\pwworking\central01\d4597463\012_DP01_SL0021_I50.dgn 10:29:51 AM 3/25/2026

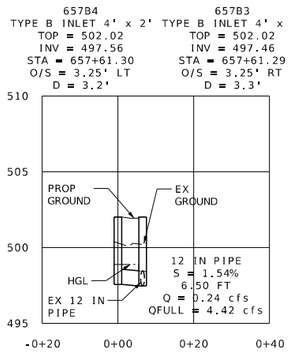

LINE 657-A

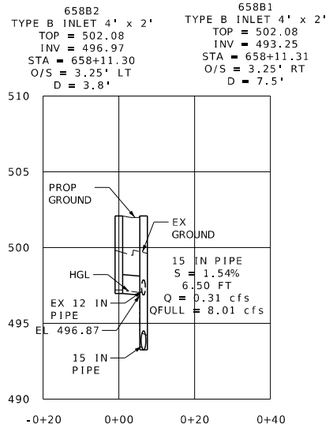

LINE 658-B

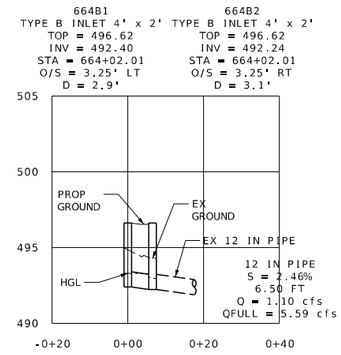

LINE 664-B

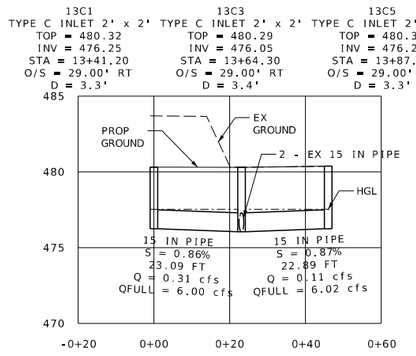

LINE 13-A

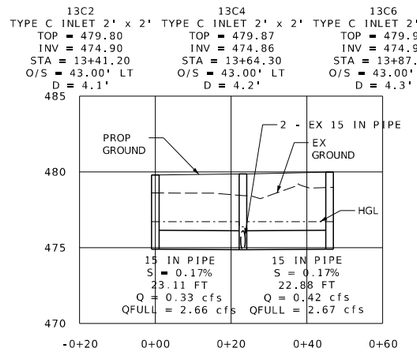

LINE 13-B

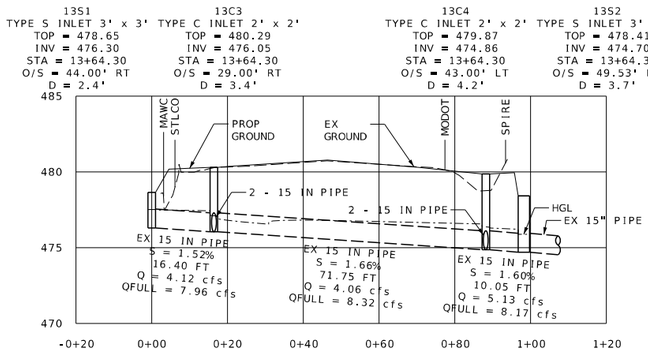

LINE 13-C

NOTES:
1) ALL PIPES TO BE GROUP A UNLESS OTHERWISE NOTED.
2) REFER TO PIPE LAYOUT DETAIL ON DRAINAGE GENERAL NOTES SHEET.
3) ALL SEWERS SHOWN SHALL BE MAINTAINED BY MODOT UNLESS OTHERWISE NOTED.
4) INLET STRUCTURE BASE TO BE SIZED APPROPRIATELY FOR INCOMING AND OUTGOING PIPES. SHOP DRAWINGS TO BE PROVIDED PRIOR TO CONSTRUCTION.

I-270 DRAINAGE PROFILES
SHEET 2 OF 2

STATE OF MISSOURI
DAVID RIECHMANN
NUMBER PE-2011000948
PROFESSIONAL ENGINEER

DATE PREPARED: 3/25/2026
ROUTE: I-270 | STATE: MO
DISTRICT: SL | SHEET NO.: 132
COUNTY: ST. LOUIS
JOB NO.: JSL0021
CONTRACT ID.:
PROJECT NO.:
BRIDGE NO.:

DESCRIPTION	DATE

IF A SEAL IS PRESENT ON THIS SHEET IT HAS BEEN ELECTRONICALLY SEALED AND DATED.

MISSOURI HIGHWAYS AND TRANSPORTATION COMMISSION
105 WEST CAPITOL
JEFFERSON CITY, MO 65102
1-888-ASK-MODOT (1-888-275-6636)

HORNER & SHIFRIN
401 S. 18TH ST., STE. 400 ST. LOUIS, MO 63103
314-241-1976 FAX 314-241-1988
WWW.HORNERSHIFRIN.COM
DISCIPLINE: PROFESSIONAL ENGINEERING
CERTIFICATE OF AUTHORITY: 000159
EXPIRATION DATE: DECEMBER 31, 2026

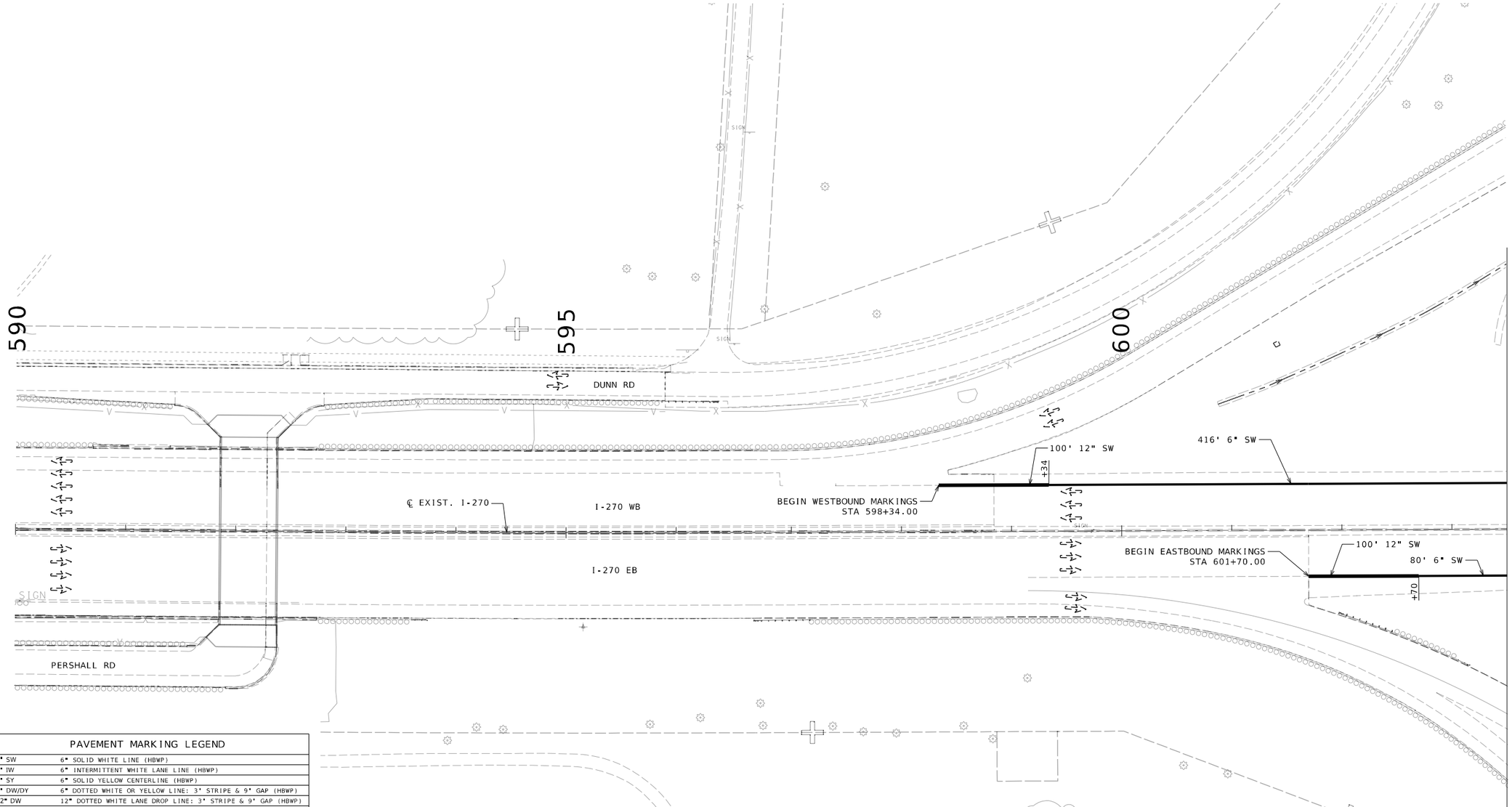

PAVEMENT MARKING LEGEND	
6" SW	6" SOLID WHITE LINE (HBWP)
6" IW	6" INTERMITTENT WHITE LANE LINE (HBWP)
6" SY	6" SOLID YELLOW CENTERLINE (HBWP)
6" DW/DY	6" DOTTED WHITE OR YELLOW LINE: 3' STRIPE & 9' GAP (HBWP)
12" DW	12" DOTTED WHITE LANE DROP LINE: 3' STRIPE & 9' GAP (HBWP)
4" SY	4" SOLID YELLOW CENTERLINE (WB)
4" DSY	4" DOUBLE SOLID YELLOW CENTERLINE (WB)
4" IY	4" INTERMITTENT YELLOW CENTERLINE (WB)
4" SW	4" SOLID WHITE LANE LINE (WB)
4" IW	4" INTERMITTENT WHITE LANE LINE (WB)
4" DW	4" DASHED WHITE LINE: 2' STRIPE & 4' GAP (WB)
24" SY	24" SOLID YELLOW HATCHING (WB)
24" SW	24" SOLID WHITE HATCHING (HBWP)
6" SWT	6" SOLID WHITE (SPRAY THERMOPLASTIC)
6" SYT	6" SOLID YELLOW (SPRAY THERMOPLASTIC)
12" SWT	12" SOLID WHITE (SPRAY THERMOPLASTIC)
24" WSB	24" SOLID WHITE STOP BAR (PREFORMED THERMOPLASTIC)
24" WYT	24" X 36" SOLID WHITE YIELD TRIANGLES (PREFORMED THERMOPLASTIC)
▮▮▮	2' X 6" WHITE CROSSWALK MARKINGS (PREFORMED THERMOPLASTIC)
↰	TURN ARROW PAVEMENT MARKING (PREFORMED THERMOPLASTIC)
ONLY	5'-10" X 8' ONLY PAVEMENT MARKING (PERFORMED THERMOPLASTIC)
⇨	LANE USAGE ARROW

NOTES:
1) BLACK CONTRAST MARKINGS ARE REQUIRED FOR ALL LANE LINES ON CONCRETE PAVEMENT (NO DIRECT PAY)
2) HBWP: HIGH BUILD WATERBORNE PAINT WITH TYPE L BEADS
3) WB: STANDARD WATERBORNE PAINT WITH TYPE P BEADS
4) FOR LOCATIONS OF PROPOSED RUMBLE STRIPS SEE MODOT STANDARD PLAN 626.00H AND STATION RANGES ON QUANTITY TABLE

NOTE: PAVEMENT MARKING PLANS ONLY COVER AREAS WITHIN THE LIMITS OF IMPROVEMENTS OF THE JSL0021 PROJECT. PLEASE SEE PLANS FOR J6I3580B FOR AREAS OUTSIDE OF THOSE IMPROVEMENTS. IT IS INTENDED THAT THE FINAL PAVEMENT MARKINGS FOR JSL0021 AND J6I3580B BE CONSTRUCTED TOGETHER.

SCALE
0 50 100 150

I-270 STRIPING PLAN
STA 590+00 TO STA 603+50
SHEET 1 OF 8

STATE OF MISSOURI
EUGENE LOUIS KUEKER JR.
NUMBER PE-2011000912
PROFESSIONAL ENGINEER
THIS SHEET HAS BEEN SIGNED, SEALED, AND DATED ELECTRONICALLY.

IF A SEAL IS PRESENT ON THIS SHEET IT HAS BEEN ELECTRONICALLY SEALED AND DATED.

DATE PREPARED: 3/25/2026
ROUTE: I-270 | STATE: MO
DISTRICT: SL | SHEET NO.: 133
COUNTY: ST. LOUIS
JOB NO.: JSL0021
CONTRACT ID.:
PROJECT NO.:
BRIDGE NO.:

DESCRIPTION	DATE

MISSOURI HIGHWAYS AND TRANSPORTATION COMMISSION
105 WEST CAPITOL
JEFFERSON CITY, MO 65102
1-888-ASK-MODOT (1-888-275-6636)

HDR Engineering, Inc.
1001 Highlands Plaza Drive
Suite 200
St. Louis, MO 63110-1337
314-425-8300
Certificate of Authority: 000856

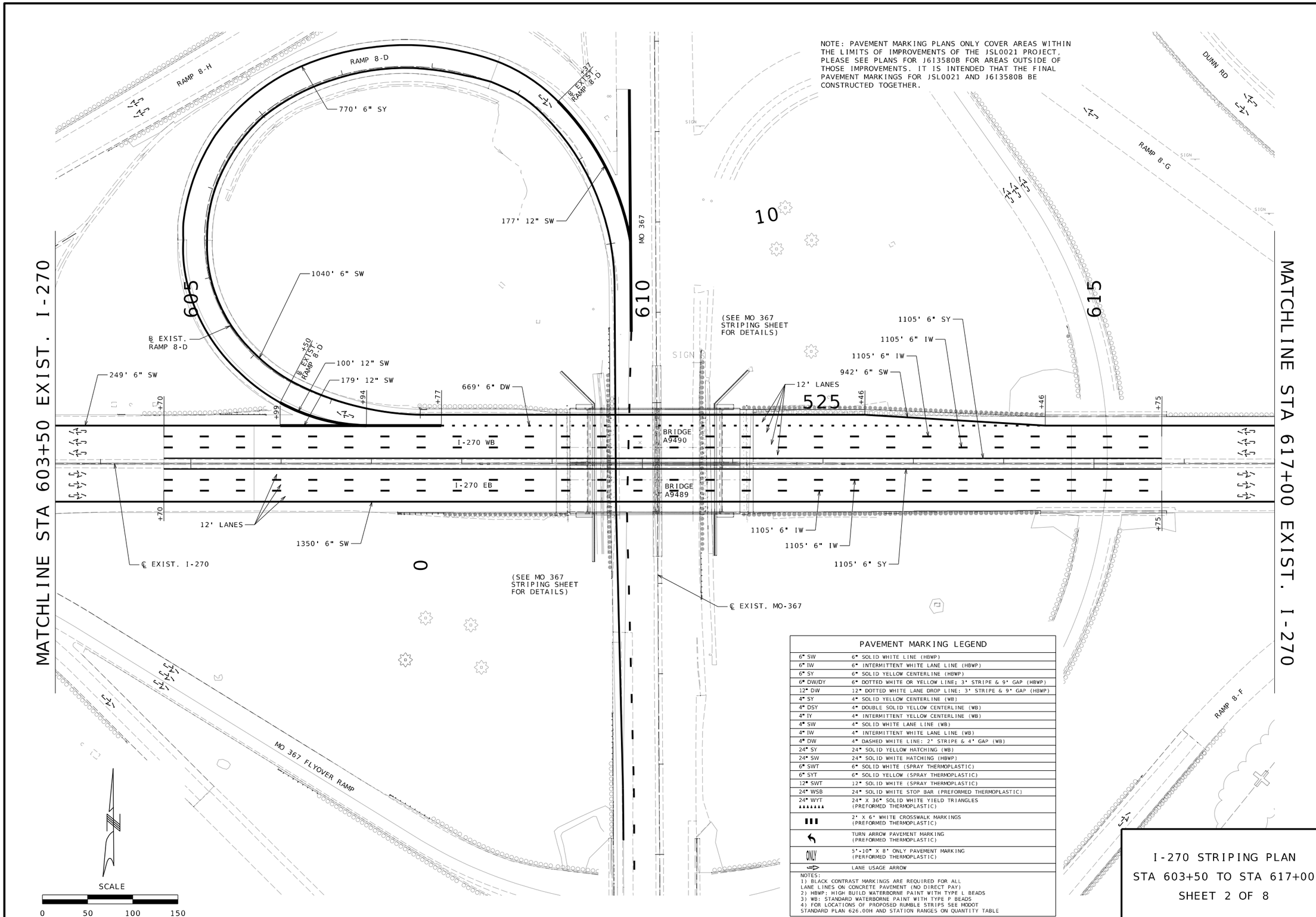

NOTE: PAVEMENT MARKING PLANS ONLY COVER AREAS WITHIN THE LIMITS OF IMPROVEMENTS OF THE JSL0021 PROJECT, PLEASE SEE PLANS FOR J6I3580B FOR AREAS OUTSIDE OF THOSE IMPROVEMENTS. IT IS INTENDED THAT THE FINAL PAVEMENT MARKINGS FOR JSL0021 AND J6I3580B BE CONSTRUCTED TOGETHER.

PAVEMENT MARKING LEGEND

6" SW	6" SOLID WHITE LINE (HBWP)
6" IW	6" INTERMITTENT WHITE LANE LINE (HBWP)
6" SY	6" SOLID YELLOW CENTERLINE (HBWP)
6" DW/DY	6" DOTTED WHITE OR YELLOW LINE; 3' STRIPE & 9' GAP (HBWP)
12" DW	12" DOTTED WHITE LANE DROP LINE; 3' STRIPE & 9' GAP (HBWP)
4" SY	4" SOLID YELLOW CENTERLINE (WB)
4" DSY	4" DOUBLE SOLID YELLOW CENTERLINE (WB)
4" IY	4" INTERMITTENT YELLOW CENTERLINE (WB)
4" SW	4" SOLID WHITE LANE LINE (WB)
4" IW	4" INTERMITTENT WHITE LANE LINE (WB)
4" DW	4" DASHED WHITE LINE: 2' STRIPE & 4' GAP (WB)
24" SY	24" SOLID YELLOW HATCHING (WB)
24" SW	24" SOLID WHITE HATCHING (HBWP)
6" SWT	6" SOLID WHITE (SPRAY THERMOPLASTIC)
6" SYT	6" SOLID YELLOW (SPRAY THERMOPLASTIC)
12" SWT	12" SOLID WHITE (SPRAY THERMOPLASTIC)
24" WSB	24" SOLID WHITE STOP BAR (PREFORMED THERMOPLASTIC)
24" WYT	24" X 36" SOLID WHITE YIELD TRIANGLES (PREFORMED THERMOPLASTIC)
	2' X 6' WHITE CROSSWALK MARKINGS (PREFORMED THERMOPLASTIC)
	TURN ARROW PAVEMENT MARKING (PREFORMED THERMOPLASTIC)
ONLY	5'-10" X 8' ONLY PAVEMENT MARKING (PERFORMED THERMOPLASTIC)
	LANE USAGE ARROW

NOTES:
1) BLACK CONTRAST MARKINGS ARE REQUIRED FOR ALL LANE LINES ON CONCRETE PAVEMENT (NO DIRECT PAY)
2) HBWP: HIGH BUILD WATERBORNE PAINT WITH TYPE L BEADS
3) WB: STANDARD WATERBORNE PAINT WITH TYPE P BEADS
4) FOR LOCATIONS OF PROPOSED RUMBLE STRIPS SEE MODOT STANDARD PLAN 626.00H AND STATION RANGES ON QUANTITY TABLE

I-270 STRIPING PLAN
STA 603+50 TO STA 617+00
SHEET 2 OF 8

STATE OF MISSOURI
EUGENE LOUIS KUELKER JR.
NUMBER PE-2011000912
PROFESSIONAL ENGINEER

THIS SHEET HAS BEEN SIGNED, SEALED, AND DATED ELECTRONICALLY.

DATE PREPARED	3/25/2026
ROUTE	I-270
STATE	MO
DISTRICT	SL
SHEET NO.	134
COUNTY	ST. LOUIS
JOB NO.	JSL0021
CONTRACT ID.	
PROJECT NO.	
BRIDGE NO.	

DATE	DESCRIPTION

IF A SEAL IS PRESENT ON THIS SHEET IT HAS BEEN ELECTRONICALLY SEALED AND DATED.

MISSOURI HIGHWAYS AND TRANSPORTATION COMMISSION
MoDOT
105 WEST CAPITOL
JEFFERSON CITY, MO 65102
1-888-ASK-MODOT (1-888-275-6636)

HDR Engineering, Inc.
1001 Highlands Plaza Drive
Suite 200
St. Louis, MO 63110-1337
314-425-8300
Certificate of Authority: 000856

c:\pwworking\central01\d4324513\129_PM02_JSL0021_I50_I-270.dgn 2:46:54 PM 3/25/2026

NOTE: PAVEMENT MARKING PLANS ONLY COVER AREAS WITHIN THE LIMITS OF IMPROVEMENTS OF THE JSL0021 PROJECT. PLEASE SEE PLANS FOR J6I3580B FOR AREAS OUTSIDE OF THOSE IMPROVEMENTS. IT IS INTENDED THAT THE FINAL PAVEMENT MARKINGS FOR JSL0021 AND J6I3580B BE CONSTRUCTED TOGETHER.

MATCHLINE STA 617+00 EXIST. I-270

MATCHLINE STA 630+50 EXIST. I-270

620 625 630

DUNN RD

RAMP 8-G

RAMP 8-F

211' 6" SW

100' 12" SW

804' 6" SW

253' 6" SW

100' 12" SW

294' 6" SW

+11 +11 +47 +55 +88 +53 +53 +57

℄ EXIST. I-270

I-270 WB

I-270 EB

S89°54'40"E

SIGN

SCALE

0 50 100 150

PAVEMENT MARKING LEGEND

6" SW	6" SOLID WHITE LINE (HBWP)
6" IW	6" INTERMITTENT WHITE LANE LINE (HBWP)
6" SY	6" SOLID YELLOW CENTERLINE (HBWP)
6" DW/DY	6" DOTTED WHITE OR YELLOW LINE; 3' STRIPE & 9' GAP (HBWP)
12" DW	12" DOTTED WHITE LANE DROP LINE; 3' STRIPE & 9' GAP (HBWP)
4" SY	4" SOLID YELLOW CENTERLINE (WB)
4" DSY	4" DOUBLE SOLID YELLOW CENTERLINE (WB)
4" IY	4" INTERMITTENT YELLOW CENTERLINE (WB)
4" SW	4" SOLID WHITE LANE LINE (WB)
4" IW	4" INTERMITTENT WHITE LANE LINE (WB)
4" DW	4" DASHED WHITE LINE: 2' STRIPE & 4' GAP (WB)
24" SY	24" SOLID YELLOW HATCHING (WB)
24" SW	24" SOLID WHITE HATCHING (HBWP)
6" SWT	6" SOLID WHITE (SPRAY THERMOPLASTIC)
6" SYT	6" SOLID YELLOW (SPRAY THERMOPLASTIC)
12" SWT	12" SOLID WHITE (SPRAY THERMOPLASTIC)
24" WSB	24" SOLID WHITE STOP BAR (PREFORMED THERMOPLASTIC)
24" WYT	24" X 36" SOLID WHITE YIELD TRIANGLES (PREFORMED THERMOPLASTIC)
	2' X 6' WHITE CROSSWALK MARKINGS (PREFORMED THERMOPLASTIC)
	TURN ARROW PAVEMENT MARKING (PREFORMED THERMOPLASTIC)
ONLY	5'-10" X 8' ONLY PAVEMENT MARKING (PERFORMED THERMOPLASTIC)
	LANE USAGE ARROW

NOTES:
1) BLACK CONTRAST MARKINGS ARE REQUIRED FOR ALL LANE LINES ON CONCRETE PAVEMENT (NO DIRECT PAY)
2) HBWP: HIGH BUILD WATERBORNE PAINT WITH TYPE L BEADS
3) WB: STANDARD WATERBORNE PAINT WITH TYPE P BEADS
4) FOR LOCATIONS OF PROPOSED RUMBLE STRIPS SEE MODOT STANDARD PLAN 626.00H AND STATION RANGES ON QUANTITY TABLE

I-270 STRIPING PLAN
STA 617+00 TO STA 630+50
SHEET 3 OF 8

STATE OF MISSOURI
EUGENE LOUIS KUEKER JR.
NUMBER PE-2011000912
PROFESSIONAL ENGINEER

THIS SHEET HAS BEEN SIGNED, SEALED, AND DATED ELECTRONICALLY.

DATE PREPARED 3/25/2026

ROUTE	STATE
I-270	MO
DISTRICT	SHEET NO.
SL	135

COUNTY: ST. LOUIS
JOB NO.: JSL0021
CONTRACT ID.:
PROJECT NO.:
BRIDGE NO.:

IF A SEAL IS PRESENT ON THIS SHEET IT HAS BEEN ELECTRONICALLY SEALED AND DATED.

DESCRIPTION	DATE

MISSOURI HIGHWAYS AND TRANSPORTATION COMMISSION
105 WEST CAPITOL
JEFFERSON CITY, MO 65102
1-888-ASK-MODOT (1-888-275-6636)

HDR Engineering, Inc.
1001 Highlands Plaza Drive
Suite 200
St. Louis, MO 63110-1337
314-425-8300
Certificate of Authority: 000856

NOTE: PAVEMENT MARKING PLANS ONLY COVER AREAS WITHIN THE LIMITS OF IMPROVEMENTS OF THE JSL0021 PROJECT. PLEASE SEE PLANS FOR J6I3580B FOR AREAS OUTSIDE OF THOSE IMPROVEMENTS. IT IS INTENDED THAT THE FINAL PAVEMENT MARKINGS FOR JSL0021 AND J6I3580B BE CONSTRUCTED TOGETHER.

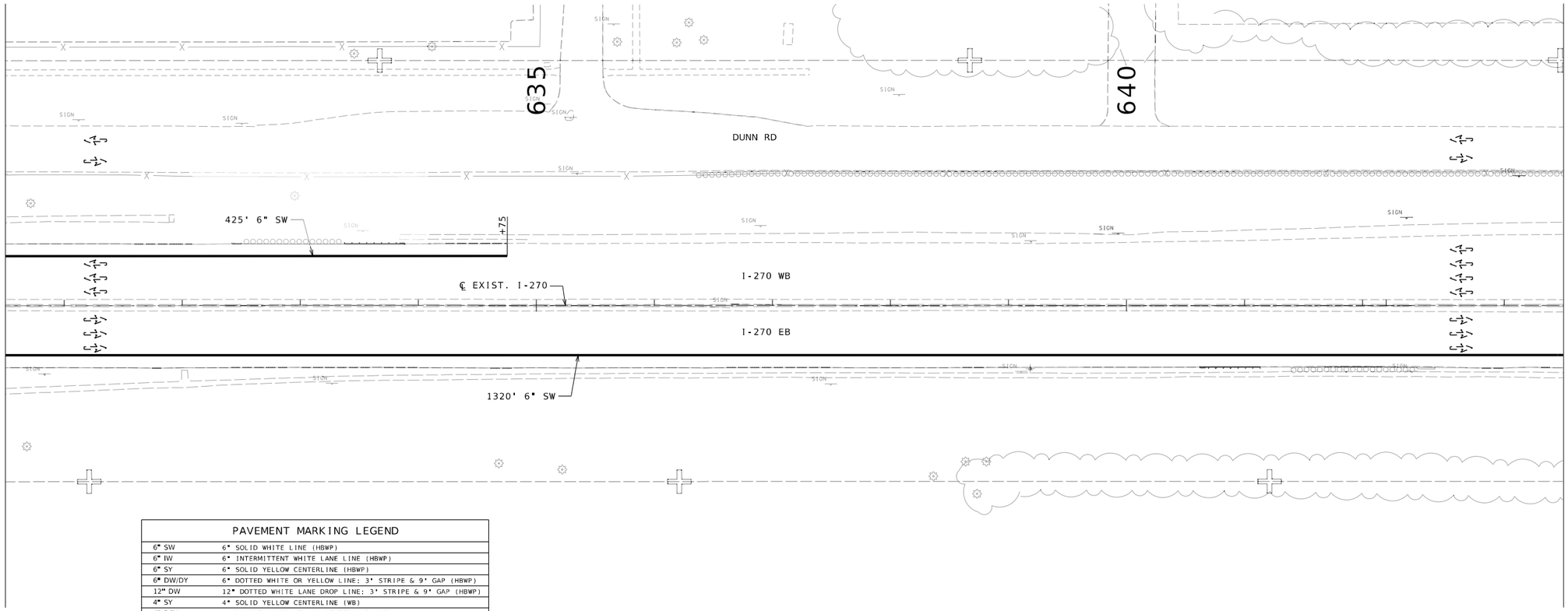

PAVEMENT MARKING LEGEND	
6" SW	6" SOLID WHITE LINE (HBWP)
6" IW	6" INTERMITTENT WHITE LANE LINE (HBWP)
6" SY	6" SOLID YELLOW CENTERLINE (HBWP)
6" DW/DY	6" DOTTED WHITE OR YELLOW LINE: 3' STRIPE & 9' GAP (HBWP)
12" DW	12" DOTTED WHITE LANE DROP LINE: 3' STRIPE & 9' GAP (HBWP)
4" SY	4" SOLID YELLOW CENTERLINE (WB)
4" DSY	4" DOUBLE SOLID YELLOW CENTERLINE (WB)
4" IY	4" INTERMITTENT YELLOW CENTERLINE (WB)
4" SW	4" SOLID WHITE LANE LINE (WB)
4" IW	4" INTERMITTENT WHITE LANE LINE (WB)
4" DW	4" DASHED WHITE LINE: 2' STRIPE & 4' GAP (WB)
24" SY	24" SOLID YELLOW HATCHING (WB)
24" SW	24" SOLID WHITE HATCHING (HBWP)
6" SWT	6" SOLID WHITE (SPRAY THERMOPLASTIC)
6" SYT	6" SOLID YELLOW (SPRAY THERMOPLASTIC)
12" SWT	12" SOLID WHITE (SPRAY THERMOPLASTIC)
24" WSB	24" SOLID WHITE STOP BAR (PREFORMED THERMOPLASTIC)
24" WYT	24" X 36" SOLID WHITE YIELD TRIANGLES (PREFORMED THERMOPLASTIC)
	2' X 6' WHITE CROSSWALK MARKINGS (PREFORMED THERMOPLASTIC)
	TURN ARROW PAVEMENT MARKING (PREFORMED THERMOPLASTIC)
ONLY	5'-10" X 8' ONLY PAVEMENT MARKING (PERFORMED THERMOPLASTIC)
	LANE USAGE ARROW

NOTES:
1) BLACK CONTRAST MARKINGS ARE REQUIRED FOR ALL LANE LINES ON CONCRETE PAVEMENT (NO DIRECT PAY)
2) HBWP: HIGH BUILD WATERBORNE PAINT WITH TYPE L BEADS
3) WB: STANDARD WATERBORNE PAINT WITH TYPE P BEADS
4) FOR LOCATIONS OF PROPOSED RUMBLE STRIPS SEE MODOT STANDARD PLAN 626.00H AND STATION RANGES ON QUANTITY TABLE

SCALE
0 50 100 150

I-270 STRIPING PLAN
STA 630+50 TO STA 642+50
SHEET 4 OF 8

STATE OF MISSOURI
EUGENE LOUIS KUEKER JR.
NUMBER PE-2011000312
PROFESSIONAL ENGINEER
THIS SHEET HAS BEEN SIGNED, SEALED, AND DATED ELECTRONICALLY.

IF A SEAL IS PRESENT ON THIS SHEET IT HAS BEEN ELECTRONICALLY SEALED AND DATED.

DATE PREPARED: 3/25/2026
ROUTE: I-270 | STATE: MO
DISTRICT: SL | SHEET NO.: 136
COUNTY: ST. LOUIS
JOB NO.: JSL0021
CONTRACT ID.:
PROJECT NO.:
BRIDGE NO.:

DESCRIPTION	DATE

MISSOURI HIGHWAYS AND TRANSPORTATION COMMISSION
105 WEST CAPITOL
JEFFERSON CITY, MO 65102
1-888-ASK-MODOT (1-888-275-6636)

HDR Engineering, Inc.
1001 Highlands Plaza Drive
Suite 200
St. Louis, MO 63110-1337
314-425-8300
Certificate of Authority: 000856

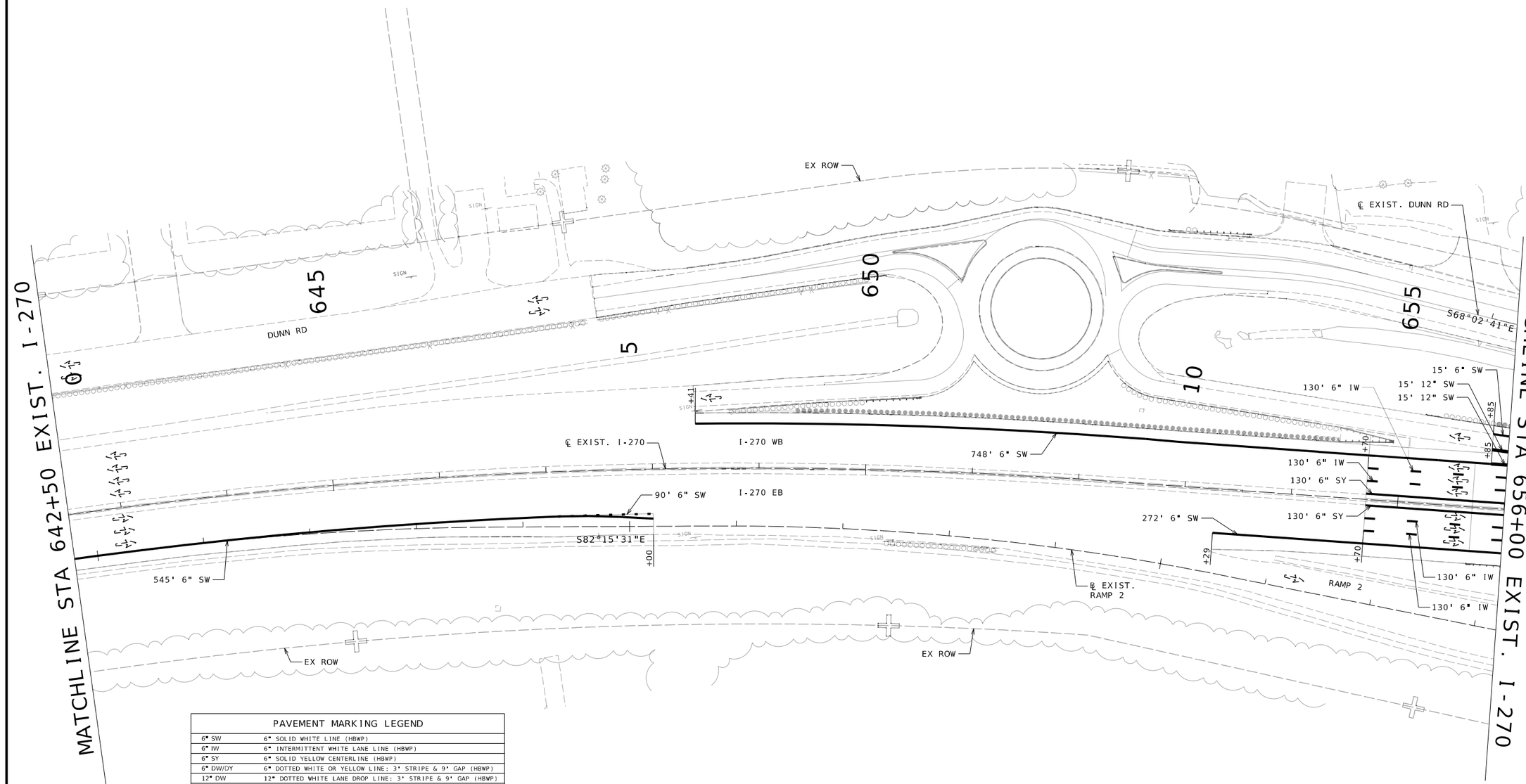

PAVEMENT MARKING LEGEND	
6" SW	6" SOLID WHITE LINE (HBWP)
6" IW	6" INTERMITTENT WHITE LANE LINE (HBWP)
6" SY	6" SOLID YELLOW CENTERLINE (HBWP)
6" DW/DY	6" DOTTED WHITE OR YELLOW LINE: 3' STRIPE & 9' GAP (HBWP)
12" DW	12" DOTTED WHITE LANE DROP LINE: 3' STRIPE & 9' GAP (HBWP)
4" SY	4" SOLID YELLOW CENTERLINE (WB)
4" DSY	4" DOUBLE SOLID YELLOW CENTERLINE (WB)
4" IY	4" INTERMITTENT YELLOW CENTERLINE (WB)
4" SW	4" SOLID WHITE LANE LINE (WB)
4" IW	4" INTERMITTENT WHITE LANE LINE (WB)
4" DW	4" DASHED WHITE LINE: 2' STRIPE & 4' GAP (WB)
24" SY	24" SOLID YELLOW HATCHING (WB)
24" SW	24" SOLID WHITE HATCHING (HBWP)
6" SWT	6" SOLID WHITE (SPRAY THERMOPLASTIC)
6" SYT	6" SOLID YELLOW (SPRAY THERMOPLASTIC)
12" SWT	12" SOLID WHITE (SPRAY THERMOPLASTIC)
24" WSB	24" SOLID WHITE STOP BAR (PREFORMED THERMOPLASTIC)
24" WYT	24" X 36" SOLID WHITE YIELD TRIANGLES (PREFORMED THERMOPLASTIC)
	2' X 6' WHITE CROSSWALK MARKINGS (PREFORMED THERMOPLASTIC)
	TURN ARROW PAVEMENT MARKING (PREFORMED THERMOPLASTIC)
ONLY	5'-10" X 8' ONLY PAVEMENT MARKING (PERFORMED THERMOPLASTIC)
	LANE USAGE ARROW

NOTES:
1) BLACK CONTRAST MARKINGS ARE REQUIRED FOR ALL LANE LINES ON CONCRETE PAVEMENT (NO DIRECT PAY)
2) HBWP: HIGH BUILD WATERBORNE PAINT WITH TYPE L BEADS
3) WB: STANDARD WATERBORNE PAINT WITH TYPE P BEADS
4) FOR LOCATIONS OF PROPOSED RUMBLE STRIPS SEE MODOT STANDARD PLAN 626.00H AND STATION RANGES ON QUANTITY TABLE

NOTE: PAVEMENT MARKING PLANS ONLY COVER AREAS WITHIN THE LIMITS OF IMPROVEMENTS OF THE JSL0021 PROJECT, PLEASE SEE PLANS FOR J613580B FOR AREAS OUTSIDE OF THOSE IMPROVEMENTS. IT IS INTENDED THAT THE FINAL PAVEMENT MARKINGS FOR JSL0021 AND J613580B BE CONSTRUCTED TOGETHER.

SCALE
0 50 100 150

I-270 STRIPING PLAN
STA 642+50 TO STA 656+00
SHEET 5 OF 8

STATE OF MISSOURI
EUGENE LOUIS KUEKER JR.
NUMBER PE-2010000912
PROFESSIONAL ENGINEER
THIS SHEET HAS BEEN SIGNED, SEALED, AND DATED ELECTRONICALLY.

IF A SEAL IS PRESENT ON THIS SHEET IT HAS BEEN ELECTRONICALLY SEALED AND DATED.

DATE PREPARED: 3/25/2026
ROUTE: I-270 | STATE: MO
DISTRICT: SL | SHEET NO.: 137
COUNTY: ST. LOUIS
JOB NO.: JSL0021
CONTRACT ID.:
PROJECT NO.:
BRIDGE NO.:

DESCRIPTION	DATE

MISSOURI HIGHWAYS AND TRANSPORTATION COMMISSION
105 WEST CAPITOL
JEFFERSON CITY, MO 65102
1-888-ASK-MODOT (1-888-275-6636)

HDR Engineering, Inc.
1001 Highlands Plaza Drive
Suite 200
St. Louis, MO 63110-1337
314-425-8300
Certificate of Authority: 000856

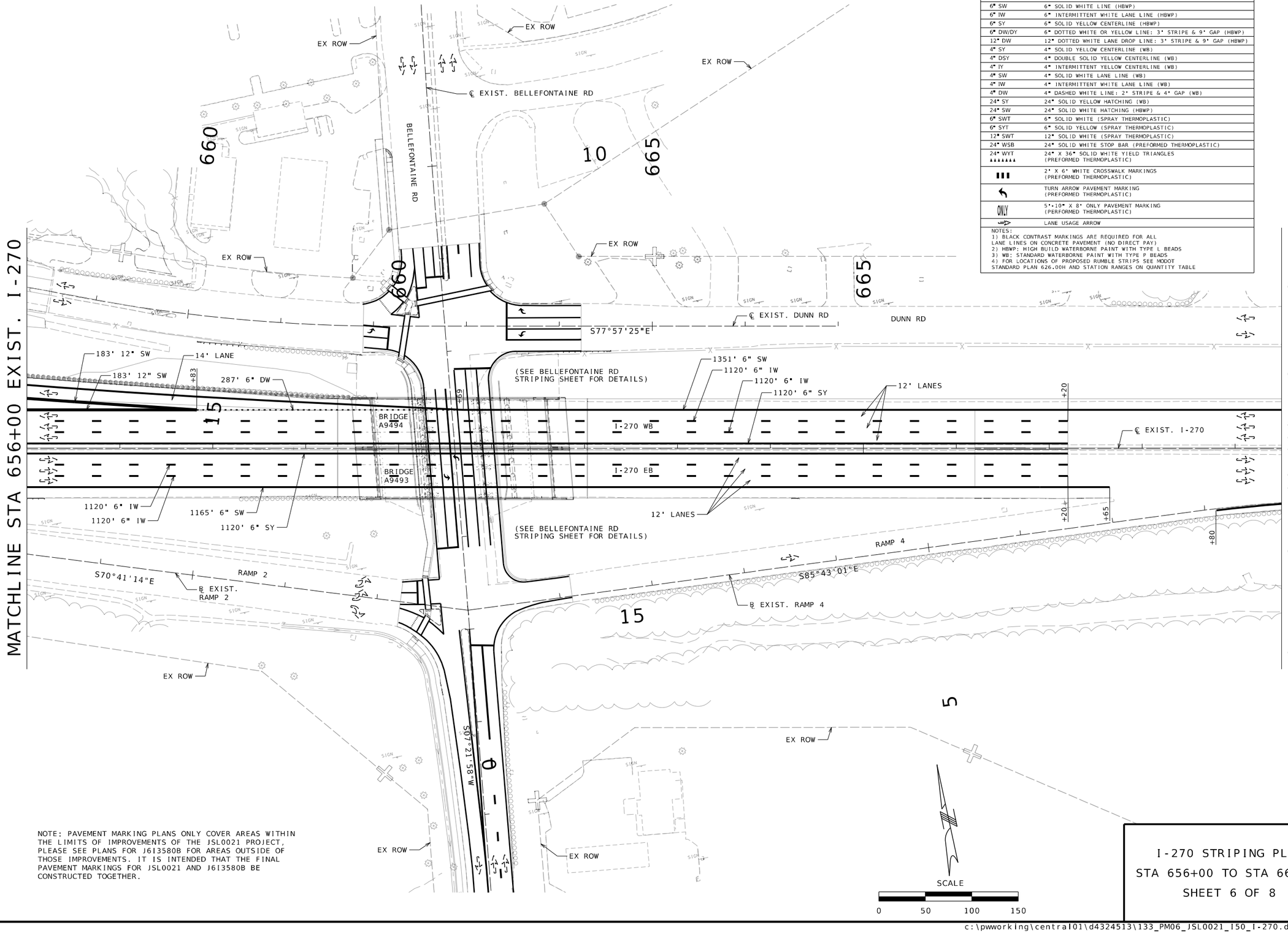

PAVEMENT MARKING LEGEND	
6" SW	6" SOLID WHITE LINE (HBWP)
6" IW	6" INTERMITTENT WHITE LANE LINE (HBWP)
6" SY	6" SOLID YELLOW CENTERLINE (HBWP)
6" DW/DY	6" DOTTED WHITE OR YELLOW LINE: 3' STRIPE & 9' GAP (HBWP)
12" DW	12" DOTTED WHITE LANE DROP LINE: 3' STRIPE & 9' GAP (HBWP)
4" SY	4" SOLID YELLOW CENTERLINE (WB)
4" DSY	4" DOUBLE SOLID YELLOW CENTERLINE (WB)
4" IY	4" INTERMITTENT YELLOW CENTERLINE (WB)
4" SW	4" SOLID WHITE LANE LINE (WB)
4" IW	4" INTERMITTENT WHITE LANE LINE (WB)
4" DW	4" DASHED WHITE LINE: 2' STRIPE & 4' GAP (WB)
24" SY	24" SOLID YELLOW HATCHING (WB)
24" SW	24" SOLID WHITE HATCHING (HBWP)
6" SWT	6" SOLID WHITE (SPRAY THERMOPLASTIC)
6" SYT	6" SOLID YELLOW (SPRAY THERMOPLASTIC)
12" SWT	12" SOLID WHITE (SPRAY THERMOPLASTIC)
24" WSB	24" SOLID WHITE STOP BAR (PREFORMED THERMOPLASTIC)
24" WYT	24" X 36" SOLID WHITE YIELD TRIANGLES (PREFORMED THERMOPLASTIC)
	2' X 6' WHITE CROSSWALK MARKINGS (PREFORMED THERMOPLASTIC)
	TURN ARROW PAVEMENT MARKING (PREFORMED THERMOPLASTIC)
ONLY	5'-10" X 8' ONLY PAVEMENT MARKING (PERFORMED THERMOPLASTIC)
	LANE USAGE ARROW

NOTES:
1) BLACK CONTRAST MARKINGS ARE REQUIRED FOR ALL LANE LINES ON CONCRETE PAVEMENT (NO DIRECT PAY)
2) HBWP: HIGH BUILD WATERBORNE PAINT WITH TYPE L BEADS
3) WB: STANDARD WATERBORNE PAINT WITH TYPE P BEADS
4) FOR LOCATIONS OF PROPOSED RUMBLE STRIPS SEE MODOT STANDARD PLAN 626.00H AND STATION RANGES ON QUANTITY TABLE

NOTE: PAVEMENT MARKING PLANS ONLY COVER AREAS WITHIN THE LIMITS OF IMPROVEMENTS OF THE JSL0021 PROJECT, PLEASE SEE PLANS FOR J6I3580B FOR AREAS OUTSIDE OF THOSE IMPROVEMENTS. IT IS INTENDED THAT THE FINAL PAVEMENT MARKINGS FOR JSL0021 AND J6I3580B BE CONSTRUCTED TOGETHER.

I-270 STRIPING PLAN
STA 656+00 TO STA 669+50
SHEET 6 OF 8

STATE OF MISSOURI
EUGENE LOUIS KUEKER JR.
NUMBER PE-2011000912
PROFESSIONAL ENGINEER

THIS SHEET HAS BEEN SIGNED, SEALED, AND DATED ELECTRONICALLY.

IF A SEAL IS PRESENT ON THIS SHEET IT HAS BEEN ELECTRONICALLY SEALED AND DATED.

DATE PREPARED	3/25/2026
ROUTE	STATE
I-270	MO
DISTRICT	SHEET NO.
SL	138
COUNTY	ST. LOUIS
JOB NO.	JSL0021
CONTRACT ID.	
PROJECT NO.	
BRIDGE NO.	

DESCRIPTION	DATE

MISSOURI HIGHWAYS AND TRANSPORTATION COMMISSION
105 WEST CAPITOL
JEFFERSON CITY, MO 65102
1-888-ASK-MODOT (1-888-275-6636)

HDR Engineering, Inc.
1001 Highlands Plaza Drive
Suite 200
St. Louis, MO 63110-1337
314-425-8300
Certificate of Authority: 000856

NOTE: PAVEMENT MARKING PLANS ONLY COVER AREAS WITHIN THE LIMITS OF IMPROVEMENTS OF THE JSL0021 PROJECT, PLEASE SEE PLANS FOR J613580B FOR AREAS OUTSIDE OF THOSE IMPROVEMENTS. IT IS INTENDED THAT THE FINAL PAVEMENT MARKINGS FOR JSL0021 AND J613580B BE CONSTRUCTED TOGETHER.

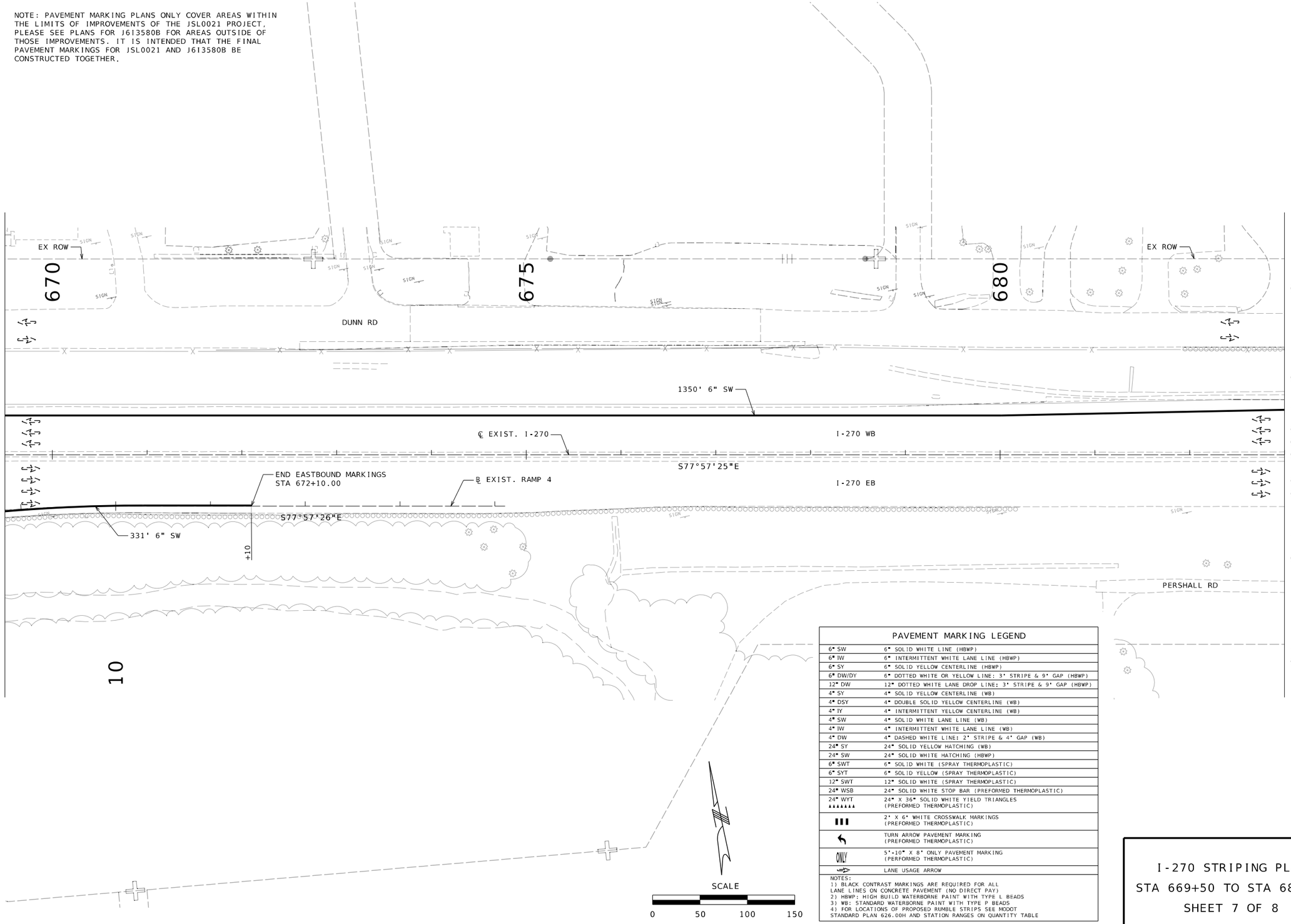

PAVEMENT MARKING LEGEND	
6" SW	6" SOLID WHITE LINE (HBWP)
6" IW	6" INTERMITTENT WHITE LANE LINE (HBWP)
6" SY	6" SOLID YELLOW CENTERLINE (HBWP)
6" DW/DY	6" DOTTED WHITE OR YELLOW LINE: 3' STRIPE & 9' GAP (HBWP)
12" DW	12" DOTTED WHITE LANE DROP LINE: 3' STRIPE & 9' GAP (HBWP)
4" SY	4" SOLID YELLOW CENTERLINE (WB)
4" DSY	4" DOUBLE SOLID YELLOW CENTERLINE (WB)
4" IY	4" INTERMITTENT YELLOW CENTERLINE (WB)
4" SW	4" SOLID WHITE LANE LINE (WB)
4" IW	4" INTERMITTENT WHITE LANE LINE (WB)
4" DW	4" DASHED WHITE LINE: 2' STRIPE & 4' GAP (WB)
24" SY	24" SOLID YELLOW HATCHING (WB)
24" SW	24" SOLID WHITE HATCHING (HBWP)
6" SWT	6" SOLID WHITE (SPRAY THERMOPLASTIC)
6" SYT	6" SOLID YELLOW (SPRAY THERMOPLASTIC)
12" SWT	12" SOLID WHITE (SPRAY THERMOPLASTIC)
24" WSB	24" SOLID WHITE STOP BAR (PREFORMED THERMOPLASTIC)
24" WYT	24" X 36" SOLID WHITE YIELD TRIANGLES (PREFORMED THERMOPLASTIC)
	2' X 6' WHITE CROSSWALK MARKINGS (PREFORMED THERMOPLASTIC)
	TURN ARROW PAVEMENT MARKING (PREFORMED THERMOPLASTIC)
ONLY	5'-10" X 8' ONLY PAVEMENT MARKING (PERFORMED THERMOPLASTIC)
	LANE USAGE ARROW

NOTES:
1) BLACK CONTRAST MARKINGS ARE REQUIRED FOR ALL LANE LINES ON CONCRETE PAVEMENT (NO DIRECT PAY)
2) HBWP: HIGH BUILD WATERBORNE PAINT WITH TYPE L BEADS
3) WB: STANDARD WATERBORNE PAINT WITH TYPE P BEADS
4) FOR LOCATIONS OF PROPOSED RUMBLE STRIPS SEE MODOT STANDARD PLAN 626.00H AND STATION RANGES ON QUANTITY TABLE

I-270 STRIPING PLAN
STA 669+50 TO STA 683+00
SHEET 7 OF 8

STATE OF MISSOURI
EUGENE LOUIS KUEKER JR.
NUMBER PE-2010009912
PROFESSIONAL ENGINEER
THIS SHEET HAS BEEN SIGNED, SEALED, AND DATED ELECTRONICALLY.

DATE PREPARED 3/25/2026

ROUTE	STATE
I-270	MO
DISTRICT	SHEET NO.
SL	139

COUNTY: ST. LOUIS
JOB NO.: JSL0021
CONTRACT ID.:
PROJECT NO.:
BRIDGE NO.:

DESCRIPTION	DATE

IF A SEAL IS PRESENT ON THIS SHEET IT HAS BEEN ELECTRONICALLY SEALED AND DATED.

MISSOURI HIGHWAYS AND TRANSPORTATION COMMISSION
105 WEST CAPITOL
JEFFERSON CITY, MO 65102
1-888-ASK-MODOT (1-888-275-6636)

HDR Engineering, Inc.
1001 Highlands Plaza Drive
Suite 200
St. Louis, MO 63110-1337
314-425-8300
Certificate of Authority: 000856

NOTE: PAVEMENT MARKING PLANS ONLY COVER AREAS WITHIN THE LIMITS OF IMPROVEMENTS OF THE JSL0021 PROJECT. PLEASE SEE PLANS FOR J6I3580B FOR AREAS OUTSIDE OF THOSE IMPROVEMENTS. IT IS INTENDED THAT THE FINAL PAVEMENT MARKINGS FOR JSL0021 AND J6I3580B BE CONSTRUCTED TOGETHER.

PAVEMENT MARKING LEGEND	
6" SW	6" SOLID WHITE LINE (HBWP)
6" IW	6" INTERMITTENT WHITE LANE LINE (HBWP)
6" SY	6" SOLID YELLOW CENTERLINE (HBWP)
6" DW/DY	6" DOTTED WHITE OR YELLOW LINE: 3' STRIPE & 9' GAP (HBWP)
12" DW	12" DOTTED WHITE LANE DROP LINE: 3' STRIPE & 9' GAP (HBWP)
4" SY	4" SOLID YELLOW CENTERLINE (WB)
4" DSY	4" DOUBLE SOLID YELLOW CENTERLINE (WB)
4" IY	4" INTERMITTENT YELLOW CENTERLINE (WB)
4" SW	4" SOLID WHITE LANE LINE (WB)
4" IW	4" INTERMITTENT WHITE LANE LINE (WB)
4" DW	4" DASHED WHITE LINE: 2' STRIPE & 4' GAP (WB)
24" SY	24" SOLID YELLOW HATCHING (WB)
24" SW	24" SOLID WHITE HATCHING (HBWP)
6" SWT	6" SOLID WHITE (SPRAY THERMOPLASTIC)
6" SYT	6" SOLID YELLOW (SPRAY THERMOPLASTIC)
12" SWT	12" SOLID WHITE (SPRAY THERMOPLASTIC)
24" WSB	24" SOLID WHITE STOP BAR (PREFORMED THERMOPLASTIC)
24" WYT	24" X 36" SOLID WHITE YIELD TRIANGLES (PREFORMED THERMOPLASTIC)
	2' X 6' WHITE CROSSWALK MARKINGS (PREFORMED THERMOPLASTIC)
	TURN ARROW PAVEMENT MARKING (PREFORMED THERMOPLASTIC)
ONLY	5'-10" X 8' ONLY PAVEMENT MARKING (PERFORMED THERMOPLASTIC)
	LANE USAGE ARROW

NOTES:
1) BLACK CONTRAST MARKINGS ARE REQUIRED FOR ALL LANE LINES ON CONCRETE PAVEMENT (NO DIRECT PAY)
2) HBWP: HIGH BUILD WATERBORNE PAINT WITH TYPE L BEADS
3) WB: STANDARD WATERBORNE PAINT WITH TYPE P BEADS
4) FOR LOCATIONS OF PROPOSED RUMBLE STRIPS SEE MODOT STANDARD PLAN 626.00H AND STATION RANGES ON QUANTITY TABLE

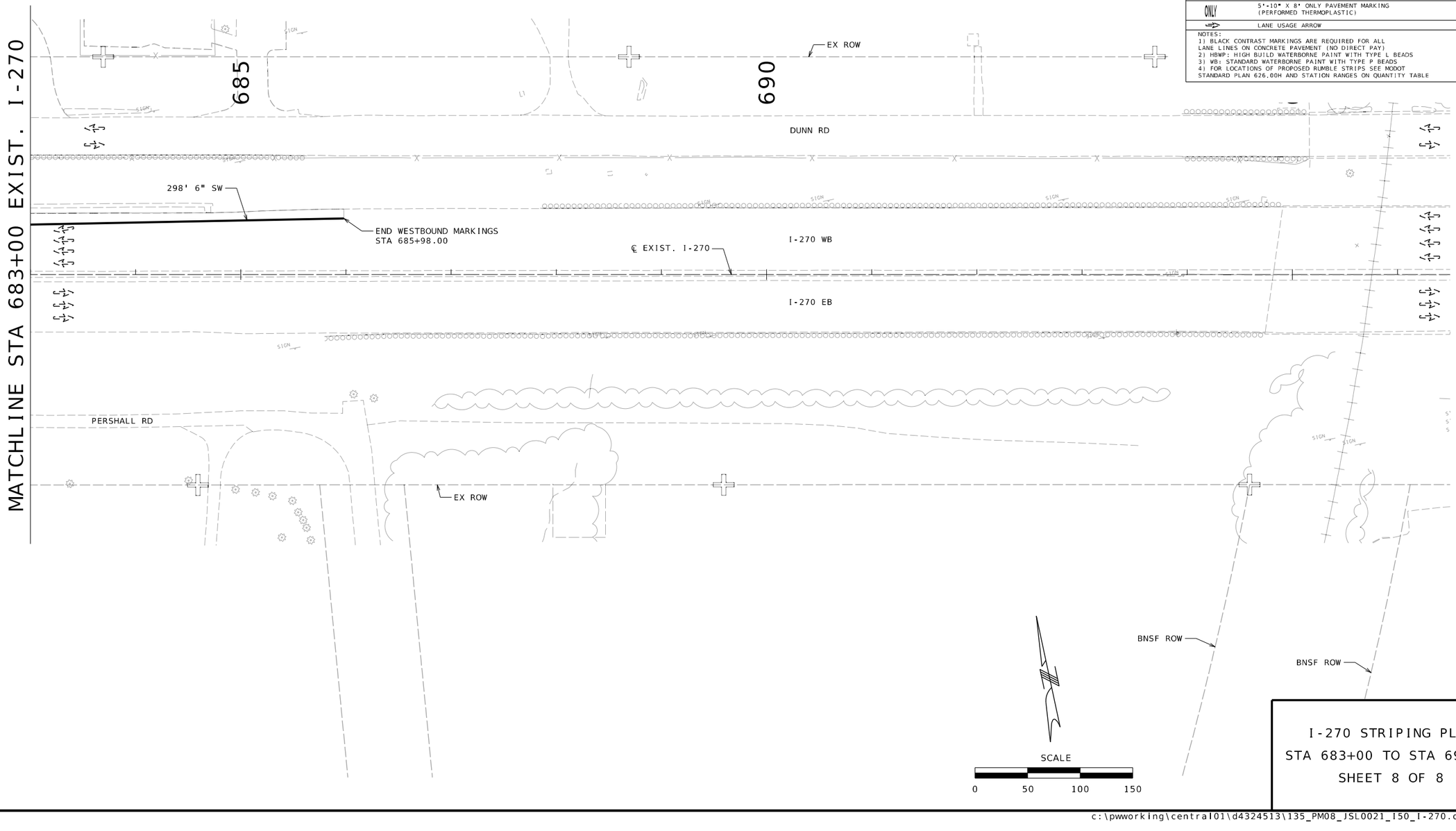

I-270 STRIPING PLAN
STA 683+00 TO STA 696+50
SHEET 8 OF 8

STATE OF MISSOURI
EUGENE LOUIS KUEKER JR.
NUMBER PE-2011000912
PROFESSIONAL ENGINEER

THIS SHEET HAS BEEN SIGNED, SEALED, AND DATED ELECTRONICALLY.

IF A SEAL IS PRESENT ON THIS SHEET IT HAS BEEN ELECTRONICALLY SEALED AND DATED.

DATE PREPARED
3/25/2026

ROUTE	STATE
I-270	MO
DISTRICT	SHEET NO.
SL	140

COUNTY
ST. LOUIS

JOB NO.
JSL0021

CONTRACT ID.

PROJECT NO.

BRIDGE NO.

DESCRIPTION	DATE

MISSOURI HIGHWAYS AND TRANSPORTATION COMMISSION
105 WEST CAPITOL
JEFFERSON CITY, MO 65102
1-888-ASK-MODOT (1-888-275-6636)

HDR Engineering, Inc.
1001 Highlands Plaza Drive
Suite 200
St. Louis, MO 63110-1337
314-425-8300
Certificate of Authority: 000856

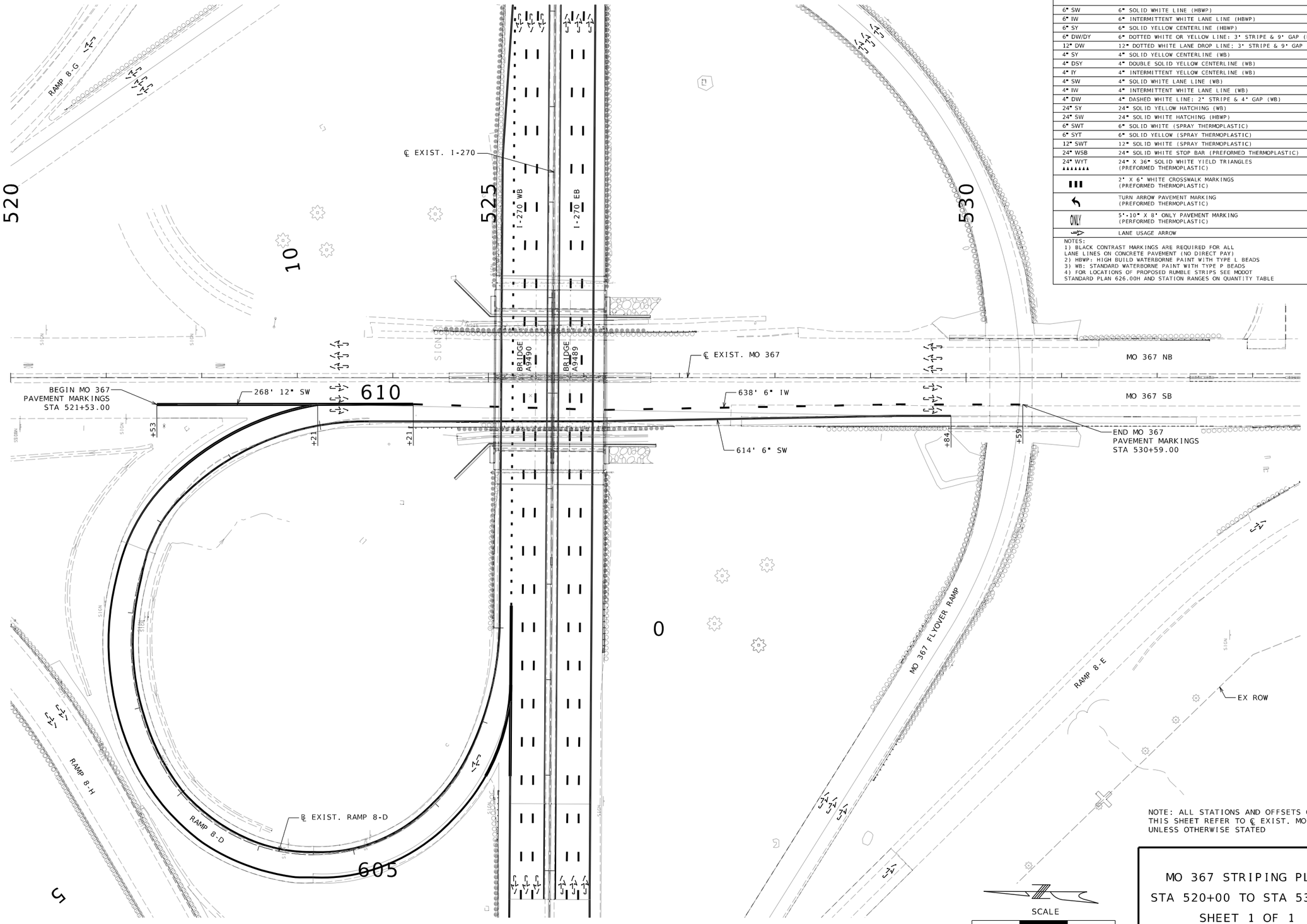

PAVEMENT MARKING LEGEND	
6" SW	6" SOLID WHITE LINE (HBWP)
6" IW	6" INTERMITTENT WHITE LANE LINE (HBWP)
6" SY	6" SOLID YELLOW CENTERLINE (HBWP)
6" DW/DY	6" DOTTED WHITE OR YELLOW LINE: 3' STRIPE & 9' GAP (HBWP)
12" DW	12" DOTTED WHITE LANE DROP LINE: 3' STRIPE & 9' GAP (HBWP)
4" SY	4" SOLID YELLOW CENTERLINE (WB)
4" DSY	4" DOUBLE SOLID YELLOW CENTERLINE (WB)
4" IY	4" INTERMITTENT YELLOW CENTERLINE (WB)
4" SW	4" SOLID WHITE LANE LINE (WB)
4" IW	4" INTERMITTENT WHITE LANE LINE (WB)
4" DW	4" DASHED WHITE LINE: 2' STRIPE & 4' GAP (WB)
24" SY	24" SOLID YELLOW HATCHING (WB)
24" SW	24" SOLID WHITE HATCHING (HBWP)
6" SWT	6" SOLID WHITE (SPRAY THERMOPLASTIC)
6" SYT	6" SOLID YELLOW (SPRAY THERMOPLASTIC)
12" SWT	12" SOLID WHITE (SPRAY THERMOPLASTIC)
24" WSB	24" SOLID WHITE STOP BAR (PREFORMED THERMOPLASTIC)
24" WYT	24" X 36" SOLID WHITE YIELD TRIANGLES (PREFORMED THERMOPLASTIC)
	2' X 6' WHITE CROSSWALK MARKINGS (PREFORMED THERMOPLASTIC)
	TURN ARROW PAVEMENT MARKING (PREFORMED THERMOPLASTIC)
ONLY	5'-10" X 8' ONLY PAVEMENT MARKING (PERFORMED THERMOPLASTIC)
	LANE USAGE ARROW

NOTES:
1) BLACK CONTRAST MARKINGS ARE REQUIRED FOR ALL LANE LINES ON CONCRETE PAVEMENT (NO DIRECT PAY)
2) HBWP: HIGH BUILD WATERBORNE PAINT WITH TYPE L BEADS
3) WB: STANDARD WATERBORNE PAINT WITH TYPE P BEADS
4) FOR LOCATIONS OF PROPOSED RUMBLE STRIPS SEE MODOT STANDARD PLAN 626.00H AND STATION RANGES ON QUANTITY TABLE

NOTE: ALL STATIONS AND OFFSETS ON THIS SHEET REFER TO ℄ EXIST. MO 367 UNLESS OTHERWISE STATED

MO 367 STRIPING PLAN
STA 520+00 TO STA 533+50
SHEET 1 OF 1

STATE OF MISSOURI
EUGENE LOUIS KUEKER JR.
NUMBER PE-2010009012
PROFESSIONAL ENGINEER

THIS SHEET HAS BEEN SIGNED, SEALED, AND DATED ELECTRONICALLY.

IF A SEAL IS PRESENT ON THIS SHEET IT HAS BEEN ELECTRONICALLY SEALED AND DATED.

DATE PREPARED: 3/25/2026
ROUTE: I-270 | STATE: MO
DISTRICT: SL | SHEET NO.: 141
COUNTY: ST. LOUIS
JOB NO.: JSL0021
CONTRACT ID.:
PROJECT NO.:
BRIDGE NO.:

DESCRIPTION	DATE

MISSOURI HIGHWAYS AND TRANSPORTATION COMMISSION
105 WEST CAPITOL
JEFFERSON CITY, MO 65102
1-888-ASK-MODOT (1-888-275-6636)

HDR Engineering, Inc.
1001 Highlands Plaza Drive
Suite 200
St. Louis, MO 63110-1337
314-425-8300
Certificate of Authority: 000856

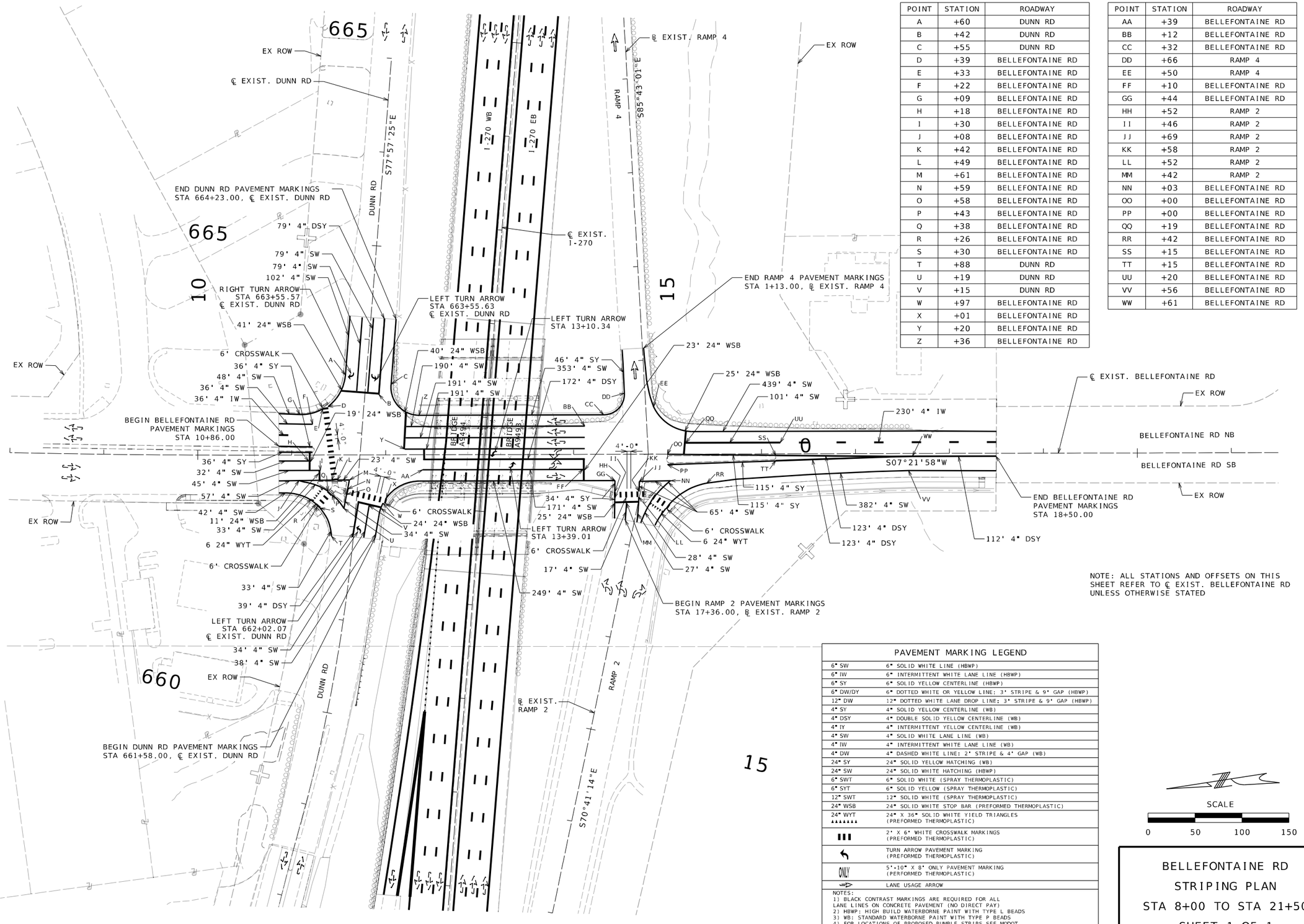

POINT	STATION	ROADWAY
A	+60	DUNN RD
B	+42	DUNN RD
C	+55	DUNN RD
D	+39	BELLEFONTAINE RD
E	+33	BELLEFONTAINE RD
F	+22	BELLEFONTAINE RD
G	+09	BELLEFONTAINE RD
H	+18	BELLEFONTAINE RD
I	+30	BELLEFONTAINE RD
J	+08	BELLEFONTAINE RD
K	+42	BELLEFONTAINE RD
L	+49	BELLEFONTAINE RD
M	+61	BELLEFONTAINE RD
N	+59	BELLEFONTAINE RD
O	+58	BELLEFONTAINE RD
P	+43	BELLEFONTAINE RD
Q	+38	BELLEFONTAINE RD
R	+26	BELLEFONTAINE RD
S	+30	BELLEFONTAINE RD
T	+88	DUNN RD
U	+19	DUNN RD
V	+15	DUNN RD
W	+97	BELLEFONTAINE RD
X	+01	BELLEFONTAINE RD
Y	+20	BELLEFONTAINE RD
Z	+36	BELLEFONTAINE RD

POINT	STATION	ROADWAY
AA	+39	BELLEFONTAINE RD
BB	+12	BELLEFONTAINE RD
CC	+32	BELLEFONTAINE RD
DD	+66	RAMP 4
EE	+50	RAMP 4
FF	+10	BELLEFONTAINE RD
GG	+44	BELLEFONTAINE RD
HH	+52	RAMP 2
II	+46	RAMP 2
JJ	+69	RAMP 2
KK	+58	RAMP 2
LL	+52	RAMP 2
MM	+42	RAMP 2
NN	+03	BELLEFONTAINE RD
OO	+00	BELLEFONTAINE RD
PP	+00	BELLEFONTAINE RD
QQ	+19	BELLEFONTAINE RD
RR	+42	BELLEFONTAINE RD
SS	+15	BELLEFONTAINE RD
TT	+15	BELLEFONTAINE RD
UU	+20	BELLEFONTAINE RD
VV	+56	BELLEFONTAINE RD
WW	+61	BELLEFONTAINE RD

NOTE: ALL STATIONS AND OFFSETS ON THIS SHEET REFER TO ℄ EXIST. BELLEFONTAINE RD UNLESS OTHERWISE STATED

PAVEMENT MARKING LEGEND

6" SW	6" SOLID WHITE LINE (HBWP)
6" IW	6" INTERMITTENT WHITE LANE LINE (HBWP)
6" SY	6" SOLID YELLOW CENTERLINE (HBWP)
6" DW/DY	6" DOTTED WHITE OR YELLOW LINE: 3' STRIPE & 9' GAP (HBWP)
12" DW	12" DOTTED WHITE LANE DROP LINE: 3' STRIPE & 9' GAP (HBWP)
4" SY	4" SOLID YELLOW CENTERLINE (WB)
4" DSY	4" DOUBLE SOLID YELLOW CENTERLINE (WB)
4" IY	4" INTERMITTENT YELLOW CENTERLINE (WB)
4" SW	4" SOLID WHITE LANE LINE (WB)
4" IW	4" INTERMITTENT WHITE LANE LINE (WB)
4" DW	4" DASHED WHITE LINE: 2' STRIPE & 4' GAP (WB)
24" SY	24" SOLID YELLOW HATCHING (WB)
24" SW	24" SOLID WHITE HATCHING (HBWP)
6" SWT	6" SOLID WHITE (SPRAY THERMOPLASTIC)
6" SYT	6" SOLID YELLOW (SPRAY THERMOPLASTIC)
12" SWT	12" SOLID WHITE (SPRAY THERMOPLASTIC)
24" WSB	24" SOLID WHITE STOP BAR (PREFORMED THERMOPLASTIC)
24" WYT	24" X 36" SOLID WHITE YIELD TRIANGLES (PREFORMED THERMOPLASTIC)
	2' X 6' WHITE CROSSWALK MARKINGS (PREFORMED THERMOPLASTIC)
	TURN ARROW PAVEMENT MARKING (PREFORMED THERMOPLASTIC)
ONLY	5'-10" X 8' ONLY PAVEMENT MARKING (PERFORMED THERMOPLASTIC)
	LANE USAGE ARROW

NOTES:
1) BLACK CONTRAST MARKINGS ARE REQUIRED FOR ALL LANE LINES ON CONCRETE PAVEMENT (NO DIRECT PAY)
2) HBWP: HIGH BUILD WATERBORNE PAINT WITH TYPE L BEADS
3) WB: STANDARD WATERBORNE PAINT WITH TYPE P BEADS
4) FOR LOCATIONS OF PROPOSED RUMBLE STRIPS SEE MODOT STANDARD PLAN 626.00H AND STATION RANGES ON QUANTITY TABLE

SCALE
0 50 100 150

BELLEFONTAINE RD
STRIPING PLAN
STA 8+00 TO STA 21+50
SHEET 1 OF 1

STATE OF MISSOURI
EUGENE LOUIS KUELKER JR.
NUMBER PE-2011000912
PROFESSIONAL ENGINEER
THIS SHEET HAS BEEN SIGNED, SEALED, AND DATED ELECTRONICALLY.

IF A SEAL IS PRESENT ON THIS SHEET IT HAS BEEN ELECTRONICALLY SEALED AND DATED.

DATE PREPARED: 3/25/2026
ROUTE: I-270 | STATE: MO
DISTRICT: SL | SHEET NO.: 142
COUNTY: ST. LOUIS
JOB NO.: JSL0021
CONTRACT ID.:
PROJECT NO.:
BRIDGE NO.:

DESCRIPTION | DATE

MISSOURI HIGHWAYS AND TRANSPORTATION COMMISSION
105 WEST CAPITOL
JEFFERSON CITY, MO 65102
1-888-ASK-MODOT (1-888-275-6636)

HDR Engineering, Inc.
1001 Highlands Plaza Drive
Suite 200
St. Louis, MO 63110-1337
314-425-8300
Certificate of Authority: 000856

c:\pwworking\central01\d4324513\136_PM10_JSL0021_I50_Bellefontaine_Rd.dgn 2:47:51 PM 3/25/2026

DETAIL A
NOT TO SCALE

2" PVC
-1/C #6
-1/C #6 BARE GROUND

MATCH EXISTING CAMERA POLE BOLT PATTERN.

MODOT 2" HDPE
-24F FIBER OPTIC CABLE

DETAIL B
NOT TO SCALE

TERMINATE PROPOSED 24F FIBER OPTIC CABLE IN EX. SIGNAL CABINET DURING CONSTRUCTION

EX. MODOT 2" HDPE (UIP)
-24F FIBER OPTIC CABLE (UIP)

MODOT 2" HDPE
-24F FIBER OPTIC CABLE

EX. MODOT 2" HDPE (R)
-24F FIBER OPTIC CABLE (R)

MODOT 2" HDPE
-24F FIBER OPTIC CABLE

ONCE PROPOSED SIGNAL CABINET IS INSTALLED, MOVE AND TERMINATE THE CABLE IN THE PROPOSED SIGNAL CABINET. SEE JSP.

ITS LEGEND

- CONTROLLER
- PULL BOX CLASS 5
- PULL BOX CLASS 2
- PULL BOX EXISTING
- CCTV CAMERA
- RADAR EXISTING
- CONDUIT EXISTING
- CONDUIT PUSHED
- CONDUIT TRENCHED

NOTE: FOR CONDUIT, WIRING AND CONNECTIONS AT SIGNALS, SEE SIGNAL SHEETS

℄ EXIST. BELLEFONTAINE RD.

INSTALL CLASS 2 PULL BOX

2" PVC
-1/C #6
-1/C #6 BARE GROUND

EX. MODOT 2" HDPE (UIP)
-24F FIBER OPTIC CABLE (UIP)
-24F FIBER OPTIC CABLE

INSTALL CLASS 5 PULL BOX

INSTALL CLASS 2 PULL BOX

FIBER OPTIC CABLE (DND)

PROPOSED TYPE II POWER SUPPLY (SEE SIGNAL PLANS)

INSTALL CLASS 5 PULL BOX

EX. PB 3

INSTALL CLASS 2 PULL BOX

INSTALL CLASS 5 PULL BOX

EX. LUMEN FIBER (DND)

INSTALL CLASS 2 PULL BOX

INSTALL CLASS 5 PULL BOX

EX. MODOT 2" HDPE (R)
-24F FIBER OPTIC CABLE (R)

REMOVE AND RELOCATE EXISTING ITS POLE. OR270W033.1C

PLACE RELOCATED POLE AT STA 656+70, SEE CCTV BASE AND FOUNDATION DETAIL SHEETS

EX. MODOT 2" HDPE (UIP)
REPLACE EX. 72 SM WITH 24 SM FIBER CABLE

MODOT 2" HDPE
-24F FIBER OPTIC CABLE

EXIST. ITS PULL BOX (R)

REMOVE EXISTING ITS POLE AND RADAR DETECTOR. SALVAGE POLE.

EX. MODOT 2" HDPE (R)
-72F FIBER OPTIC CABLE (R)

℄ EXIST. I-270

℄ EXIST. RAMP 2

EX. MODOT 2" HDPE (R)
-24F FIBER OPTIC CABLE (R)

EX. MODOT 2" HDPE (UIP)
REPLACE EX. 72 SM WITH 24 SM FIBER CABLE

℄ EXIST. RAMP 4

EX. MODOT 2" HDPE (UIP)
REPLACE EX. 72 SM WITH 24 SM FIBER CABLE

EX. MODOT 2" HDPE (UIP)
REPLACE EX. 72 SM WITH 24 SM FIBER CABLE

DETAIL C
NOT TO SCALE

EX. MODOT 2" HDPE (R)
-24F FIBER OPTIC CABLE (R)

MODOT 2" HDPE
-24F FIBER OPTIC CABLE

MODOT 2" HDPE
-24F FIBER OPTIC CABLE

ITS MH

REMOVE AND INSTALL CLASS 5 PULL BOX

SCALE
0 50 100 150

I-270 AT BELLEFONTAINE
ITS PLAN
SHEET 1 OF 1
STA 656+00 TO STA 669+50

STATE OF MISSOURI
TAYLOR C. McHENRY
NUMBER PE-2020006619
PROFESSIONAL ENGINEER

THIS SHEET HAS BEEN SIGNED, SEALED, AND DATED ELECTRONICALLY.

DATE PREPARED
3/25/2026

ROUTE	STATE
I-270	MO
DISTRICT	SHEET NO.
SL	143

COUNTY
ST. LOUIS

JOB NO.
JSL0021

CONTRACT ID.

PROJECT NO.

BRIDGE NO.

IF A SEAL IS PRESENT ON THIS SHEET IT HAS BEEN ELECTRONICALLY SEALED AND DATED.

DESCRIPTION	DATE

MISSOURI HIGHWAYS AND TRANSPORTATION COMMISSION

105 WEST CAPITOL
JEFFERSON CITY, MO 65102
1-888-ASK-MODOT (1-888-275-6636)

HDR Engineering, Inc.
1001 Highlands Plaza Drive
Suite 200
St. Louis, MO 63110-1337
314-425-8300
Certificate of Authority: 000856

c:\pwworking\central01\d4324513\143_IT01_JSL0021_I50_I-270.dgn 4:41:29 PM 3/25/2026

POLE BASE PLATE ASSEMBLY

POLE HEIGHT L (FT)	BASE PLATE							ANCHOR BOLTS		
	B	C	F	H	S	R	T	P	SIZE DIA. X LENGTH	E
30	15 1/2"	21 1/2"	11"	1 9/16"	17"	3"	1 3/8"	4"	1 1/4" x 3'-6"	7"
40	15 1/2"	21 1/2"	11"	1 9/16"	17"	3"	1 3/8"	4"	1 1/4" x 3'-6"	7"
70	2'-3 1/2"	2'-9 1/2"	19 5/16"	1 13/16"	2'-1 1/2"	3"	2 7/8"	5 1/2"	1 1/2" x 6'-0"	8 1/2"

POLE SHOE PLATE ASSEMBLY

POLE HEIGHT L (FT)	SHOE PLATE							H.S. BOLTS
	B	C	F	H	S	R	T	NO. & SIZE
30	12 1/2"	17 1/2"	8 15/16"	1 3/16"	14"	2 1/2"	1 1/2"	4'-1 1/8" Ø
40	12 1/2"	17 1/2"	8 15/16"	1 3/16"	14"	2 1/2"	1 1/2"	4'-1 1/8" Ø

POLE TABLE

POLE HEIGHT L (FT)	A				B			
	DIA. @ TOP	DIA. @ BOT.	THICKNESS	LENGTH (FT)	DIA. @ TOP	DIA. @ BOT.	THICKNESS	LENGTH (FT)
30	6"	7 1/2"	3/8"	15	7 1/2"	9"	3/8"	15
40	6"	7 1/2"	3/8"	20	7 1/2"	9"	3/8"	20
70	6"	13 1/2"	5/16"	35	13 1/2"	21"	5/16"	35

For Foundation Details see sheet 2 of 2 - CCTV Pole Foundation Details.

The location of erection channels to be determined by the manufacturer of pole.

For Section C-C see sheet 2 of 2 - CCTV Base and Foundation Details.

See Missouri Standard Plans Drawing 901.01 for Transformer Base Details.

Transformer base shall be certified as meeting the breakaway criteria and structural requirements as set by the current "AASHTO Standard Specifications for Structural Supports for Highway Signs Luminaires and Traffic Signals.

All Foundations shall contain a 3/4" diameter copper clad ground rod. Ground rod shall have a minimum of 5' of earth contact except in rock.

Temporary steel casing may be required in each shaft to prevent soil collapse.

All conduits and anchor bolts shall be rigidly installed before the concrete is placed. Anchor bolts shall be spaced by means of template, the center of which shall coincide with the center of the foundation.

See General Construction Notes, sheet 1 of 1 for Anchor Bolt Notes.

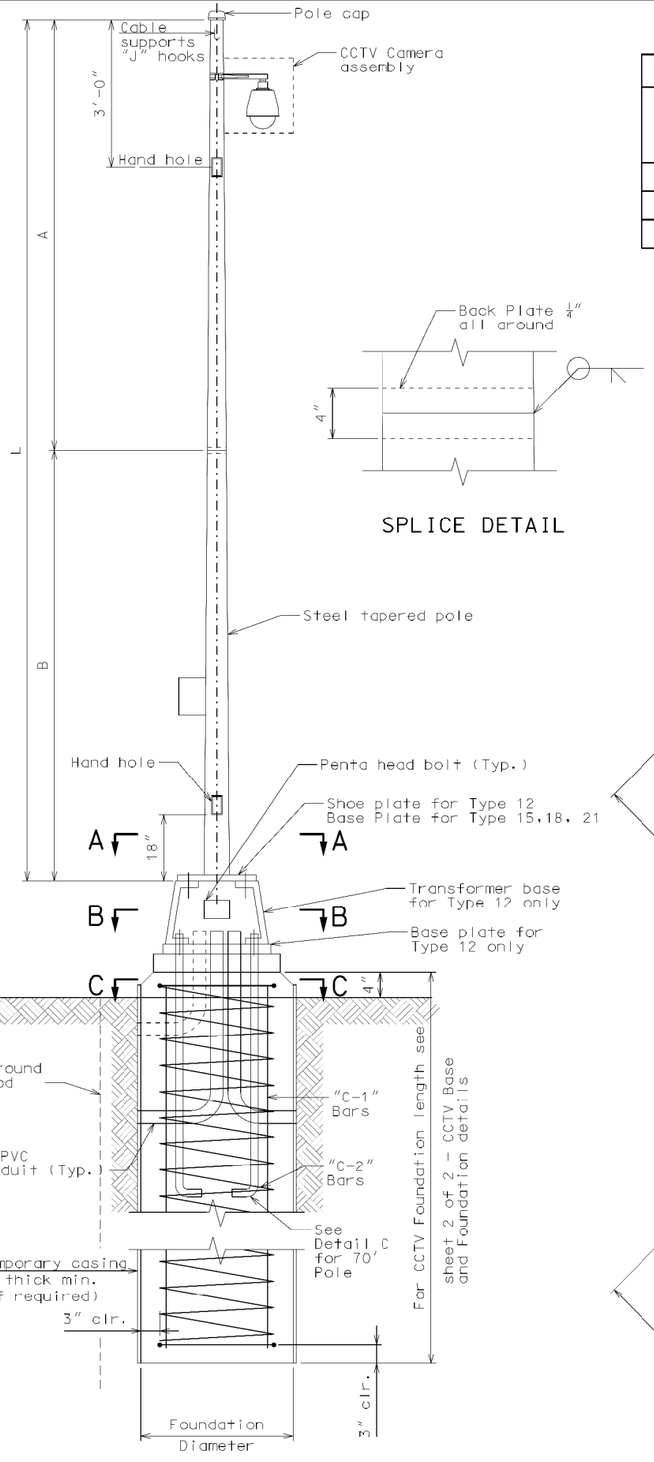

TYPICAL CAMERA POLE

SPLICE DETAIL

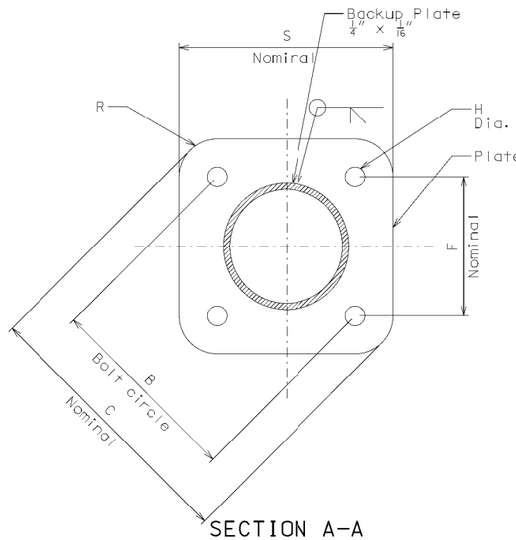

SECTION A-A

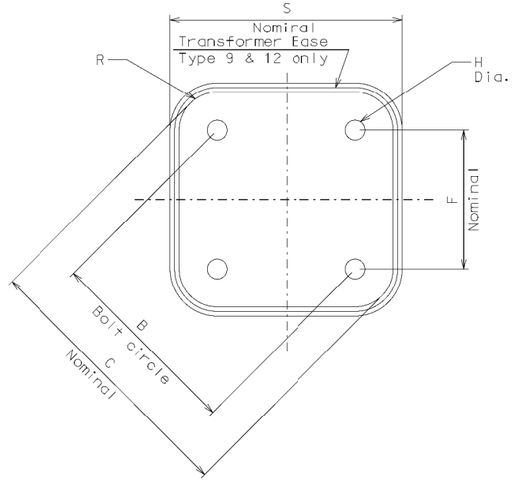

SECTION B-B

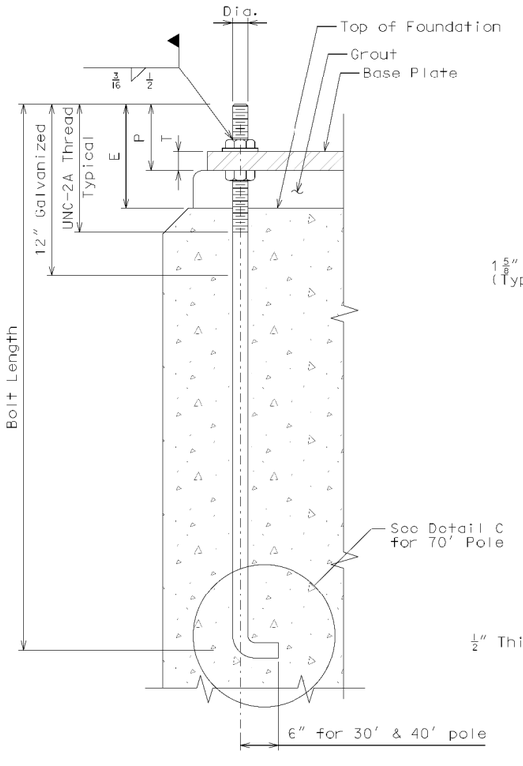

ANCHOR BOLT ASSEMBLY

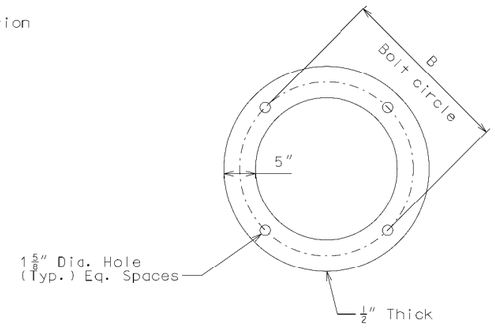

ANCHOR BOLT TEMPLATE - 70' POLE

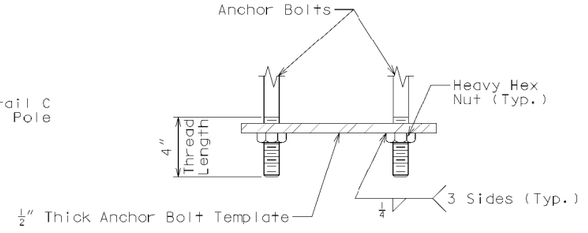

DETAIL C - 70' POLE

CCTV BASE AND FOUNDATION DETAILS SHEET 1 OF 2

STATE OF MISSOURI
TAYLOR C. McHENRY
NUMBER PE-2020006619
PROFESSIONAL ENGINEER

THIS SHEET HAS BEEN SIGNED, SEALED, AND DATED ELECTRONICALLY.

DATE PREPARED 3/25/2026

ROUTE I-270 | STATE MO

DISTRICT SL | SHEET NO. 144

COUNTY ST. LOUIS

JOB NO. JSL0021

CONTRACT ID.

PROJECT NO.

BRIDGE NO.

DESCRIPTION | DATE

IF A SEAL IS PRESENT ON THIS SHEET IT HAS BEEN ELECTRONICALLY SEALED AND DATED.

MISSOURI HIGHWAYS AND TRANSPORTATION COMMISSION
105 WEST CAPITOL
JEFFERSON CITY, MO 65102
1-888-ASK-MODOT (1-888-275-6636)

HDR Engineering, Inc.
1001 Highlands Plaza Drive
Suite 200
St. Louis, MO 63110-1337
314-425-8300
Certificate of Authority: 000856

DRILLED SHAFT AND REINFORCEMENT SCHEDULE									
POST NUMEER	POLE TYPE	POLE HEIGHT (FT)	FOUNDATION LENGTH	FOUNDATION DIAMETER	TYPE "C-1"		✳ TYPE "C-2"		
					NO. & SIZE	LENGTH	NO. & SIZE	RD	LENGTH
1	18	70	18'-0"	3'-0"	11-#9	17'-6"	1-#4	2'-6"	160'-10"

If rock is encountered shallower than foundation length, drill rock socket to design depth or 3ft, whichever is shallower.

✳ Four angle or channel spacers are required for each spiral. Spacers are to be placed on inside of spirals. Length and weight of spirals do not include splices or spacers.

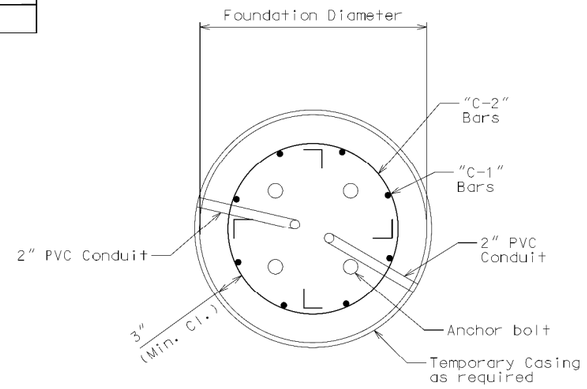

SECTION C-C

FOUNDATIONS FOR CCTV SUPPORT STRUCTURES						
POST NUMEER	STATION ✳	OFFSET	FOUNDATION TYPE	POLE HEIGHT (FT)	TOP OF DRILLED SHAFT ELEVATION	ESTIMATED DRILLED SHAFT LENGTH
1	656+70	97' LT	DRILLED SHAFT	70	491.45	18'-0"

✳ Stationing along ℄ I-270

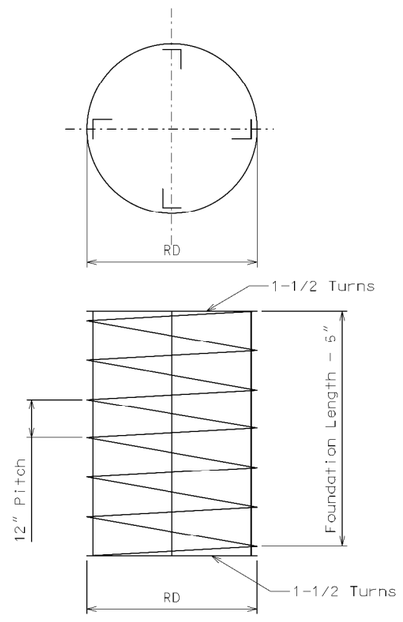

TYPE "C-2" TIE DETAIL

NOTES:

The information provided in schedule of CCTV Pole Foundations is for bidding purposes only. Prior to commencing construction. The contractor shall submit to the engineer a request for soil borings at each CCTV Foundation location. The engineer will use the information obtained from the soil borings to verify foundation type, length and reinforcing shown.

For location of Section C-C see sheet - CCTV Pole Base and Foundation Details.

For Bolt Circle Dimension and Anchor Bolt Detail see sheet - CCTV Pole Base and Foundation Details.

Integrity testing on completed drilled shafts for CCTV Pole Foundations will not be required.

CCTV BASE AND FOUNDATION DETAILS SHEET 2 OF 2

IF A SEAL IS PRESENT ON THIS SHEET IT HAS BEEN ELECTRONICALLY SEALED AND DATED.

STATE OF MISSOURI
TAYLOR C. McHENRY
NUMBER PE-2070006619
PROFESSIONAL ENGINEER

THIS SHEET HAS BEEN SIGNED, SEALED, AND DATED ELECTRONICALLY.

DATE PREPARED 3/25/2026

ROUTE	STATE
I-270	MO
DISTRICT	SHEET NO.
SL	145

COUNTY ST. LOUIS

JOB NO. JSL0021

CONTRACT ID.

PROJECT NO.

BRIDGE NO.

DESCRIPTION	DATE

MISSOURI HIGHWAYS AND TRANSPORTATION COMMISSION
105 WEST CAPITOL
JEFFERSON CITY, MO 65102
1-888-ASK-MODOT (1-888-275-6636)

HDR Engineering, Inc.
1001 Highlands Plaza Drive
Suite 200
St. Louis, MO 63110-1337
314-425-8300
Certificate of Authority: 000856

ITS PULL BOXES WITH CONCRETE PADS

CLASS 2 ITS PULLBOX WITH CONCRETE PAD

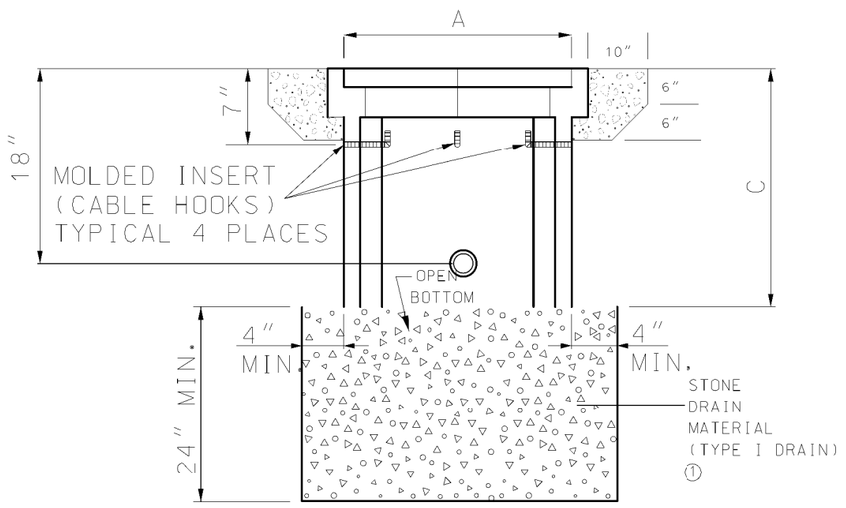

ELEVATION

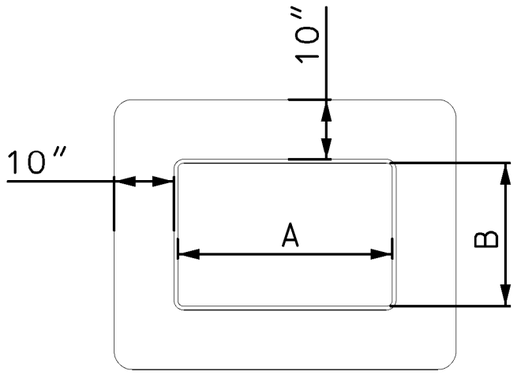

PLAN

FOR PULL BOX DIMENSIONS SEE STANDARD PLAN 902.20

CLASS 5 ITS PULLBOX WITH CONCRETE PAD

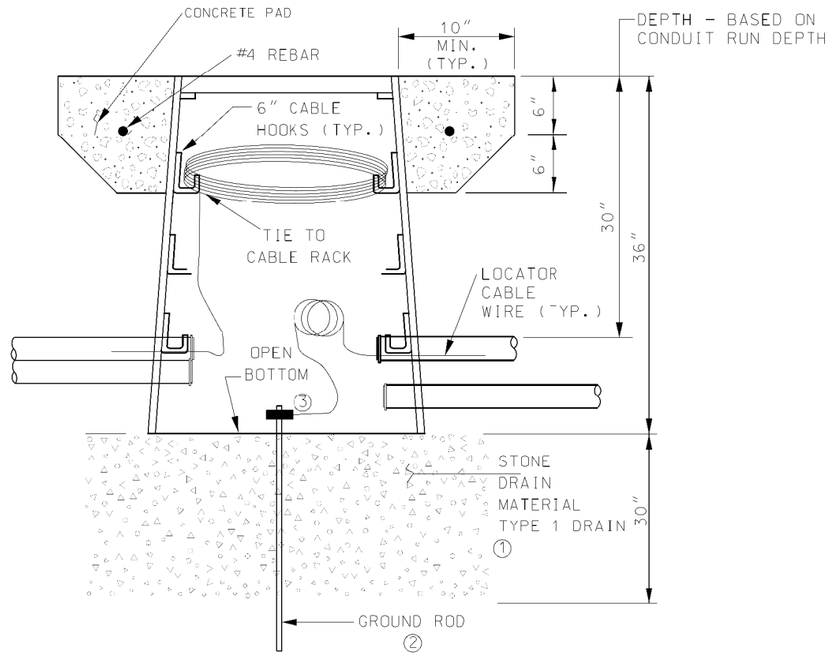

ELEVATION

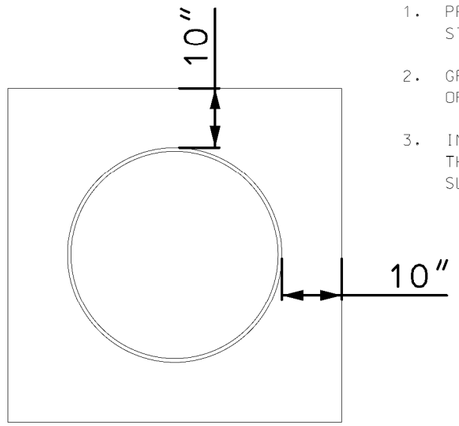

PLAN

1. PROVIDE TYPE II DRAIN AS DIRECTED BY ENGINEER. SEE STANDARD PLAN 902.20 FOR TYPE II DRAIN DETAILS.
2. GROUND ROD ONLY REQUIRED IN PULL BOX NEAREST TO AN ITS OR SIGNAL CABINET.
3. IN THE PULL BOX NEAREST THE ITS OR SIGNAL CABINET, CONNECT THE TRACER WIRE TO A GROUND ROD CLAMP AND PROVIDE 5 FEET OF SLACK.

DISCLAIMER
THE PROFESSIONAL WHOSE SIGNATURE AND PERSONAL SEAL APPEAR HEREON ASSUMES RESPONSIBILITY ONLY FOR WHAT APPEARS ON THIS PAGE, AND DISCLAIMS (PURSUANT TO SECTION 327.411 RSMO) SPECIFICATION, ESTIMATES, REPORTS, OR OTHER DOCUMENTS OR INSTRUMENTS NOT SEALED BY THE UNDERSIGNED PROFESSIONAL RELATING TO OR INTENDED TO BE USED FOR ANY PART OR PARTS OF THE PROJECT TO WHICH THIS PAGE REFERS.

STATE OF MISSOURI
TAYLOR C. McHENRY
NUMBER PE-2020006619
PROFESSIONAL ENGINEER

THIS SHEET HAS BEEN SIGNED, SEALED, AND DATED ELECTRONICALLY.

DATE PREPARED 3/25/2026

ROUTE	STATE
I-270	MO
DISTRICT	SHEET NO.
SL	146

COUNTY: ST. LOUIS

JOB NO.: JSL0021

CONTRACT ID.:

PROJECT NO.:

BRIDGE NO.:

DATE	DESCRIPTION

IF A SEAL IS PRESENT ON THIS SHEET IT HAS BEEN ELECTRONICALLY SEALED AND DATED.

MISSOURI HIGHWAYS AND TRANSPORTATION COMMISSION
105 WEST CAPITOL
JEFFERSON CITY, MO 65102
1-888-ASK-MODOT (1-888-275-6636)

HDR Engineering, Inc.
1001 Highlands Plaza Drive
Suite 200
St. Louis, MO 63110-1337
314-425-8300
Certificate of Authority: 000856

MoDOT BURIED CABLE DRIVEABLE DELINEATOR POST

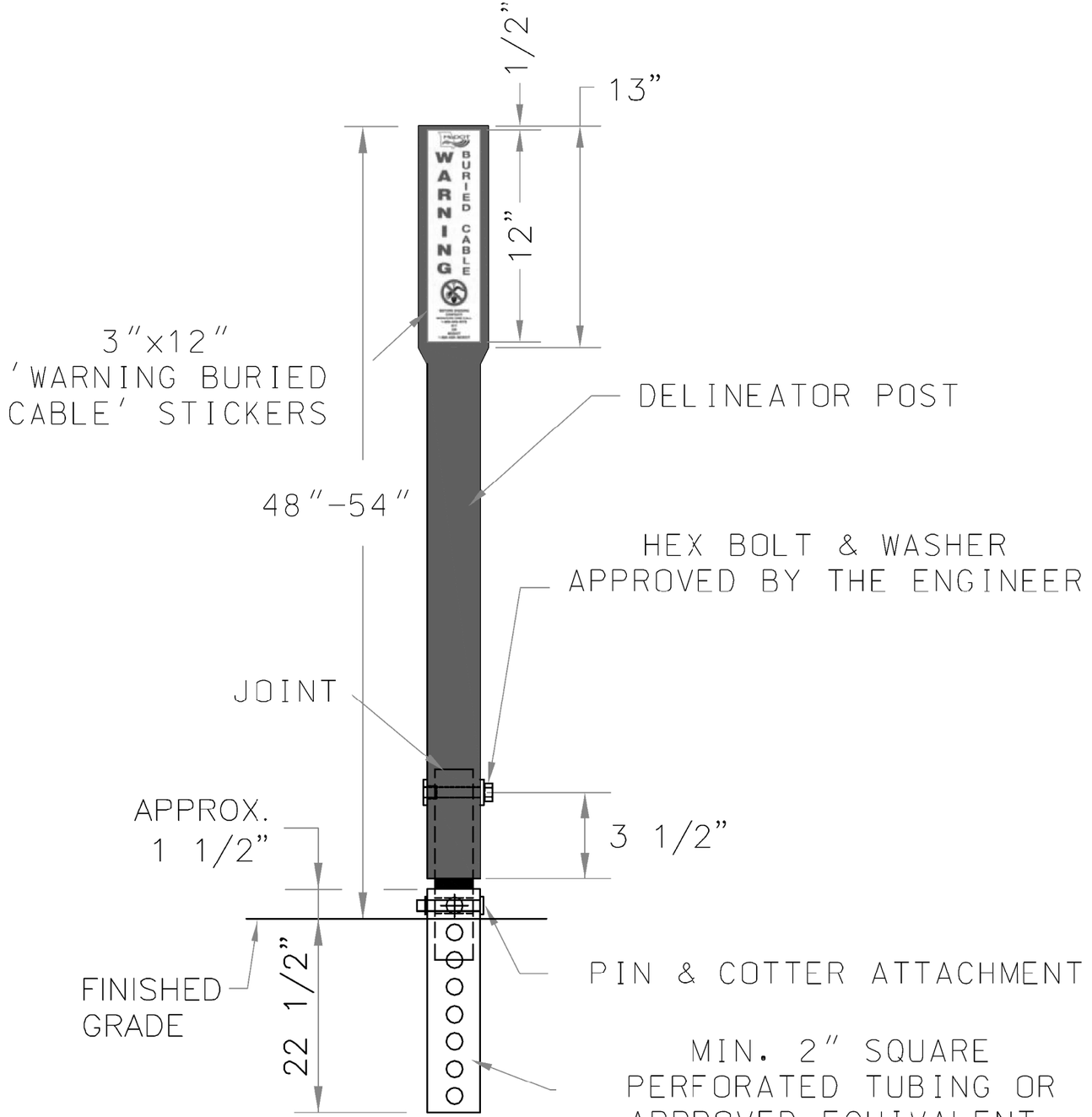

NOTES:
1. STICKERS TO BE OF A NON-REFLECTIVE MATERIAL/SHEETING.
2. STICKERS SHALL BE PROVIDED ON 1 SIDE OF POST FOR INTERSTATE ROUTES UNLESS SPECIFIED BY THE ENGINEER.
3. STICKERS SHALL BE PROVIDED ON BOTH SIDES OF POST FOR ARTERIAL ROUTES UNLESS SPECIFIED BY THE ENGINEER.
4. STICKERS TO BE INCLUDED IN COST OF A DELINEATOR POST.

MoDOT

WARNING BURIED CABLE

BEFORE DIGGING
CONTACT:
MISSOURI ONE CALL
1-800-DIG-RITE
811
OR
MODOT
1-888-ASK-MODOT

STATE OF MISSOURI
TAYLOR C. McHENRY
NUMBER PE-2020006619
PROFESSIONAL ENGINEER

THIS SHEET HAS BEEN SIGNED, SEALED, AND DATED ELECTRONICALLY.

DATE PREPARED
3/25/2026

ROUTE	STATE
I-270	MO
DISTRICT	SHEET NO.
SL	147

COUNTY
ST. LOUIS

JOB NO.
JSL0021

CONTRACT ID.

PROJECT NO.

BRIDGE NO.

DESCRIPTION	DATE

IF A SEAL IS PRESENT ON THIS SHEET IT HAS BEEN ELECTRONICALLY SEALED AND DATED.

MISSOURI HIGHWAYS AND TRANSPORTATION COMMISSION

105 WEST CAPITOL
JEFFERSON CITY, MO 65102
1-888-ASK-MODOT (1-888-275-6636)

HDR Engineering, Inc.
1001 Highlands Plaza Drive
Suite 200
St. Louis, MO 63110-1337
314-425-8300
Certificate of Authority: 000856

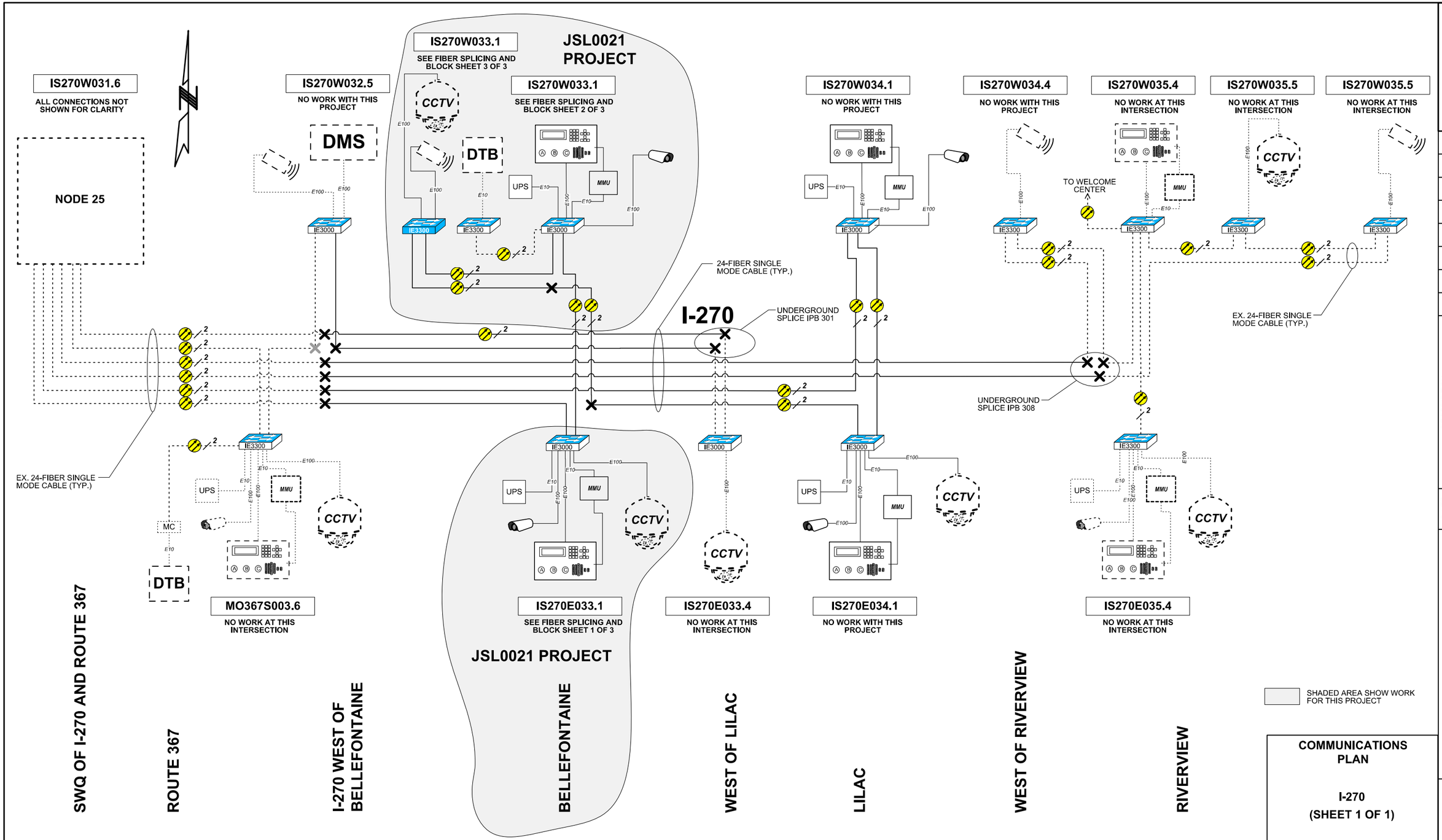

STATE OF MISSOURI
CHARLES A. MILLER
NUMBER E-2002000606
REGISTERED PROFESSIONAL ENGINEER
3/20/2026

IF A SEAL IS PRESENT ON THIS SHEET IT HAS BEEN ELECTRONICALLY SEALED AND DATED.

DATE PREPARED	10/07/2025
ROUTE 270	STATE MO
DISTRICT SL	SHEET NO. 148
COUNTY	ST. LOUIS
JOB NO.	JSL0021
CONTRACT ID.	
PROJECT NO.	
BRIDGE NO.	

DESCRIPTION

DATE

REV.

MISSOURI HIGHWAYS AND TRANSPORTATION COMMISSION

105 WEST CAPITOL
JEFFERSON CITY, MO 65102
1-888-ASK-MODOT (1-888-275-6636)

HNTB
715 KIRK DRIVE
KANSAS CITY, MO 64105
(816) 472-1201

JSL0021_LocalComm_v1.vsd 10/07/2025

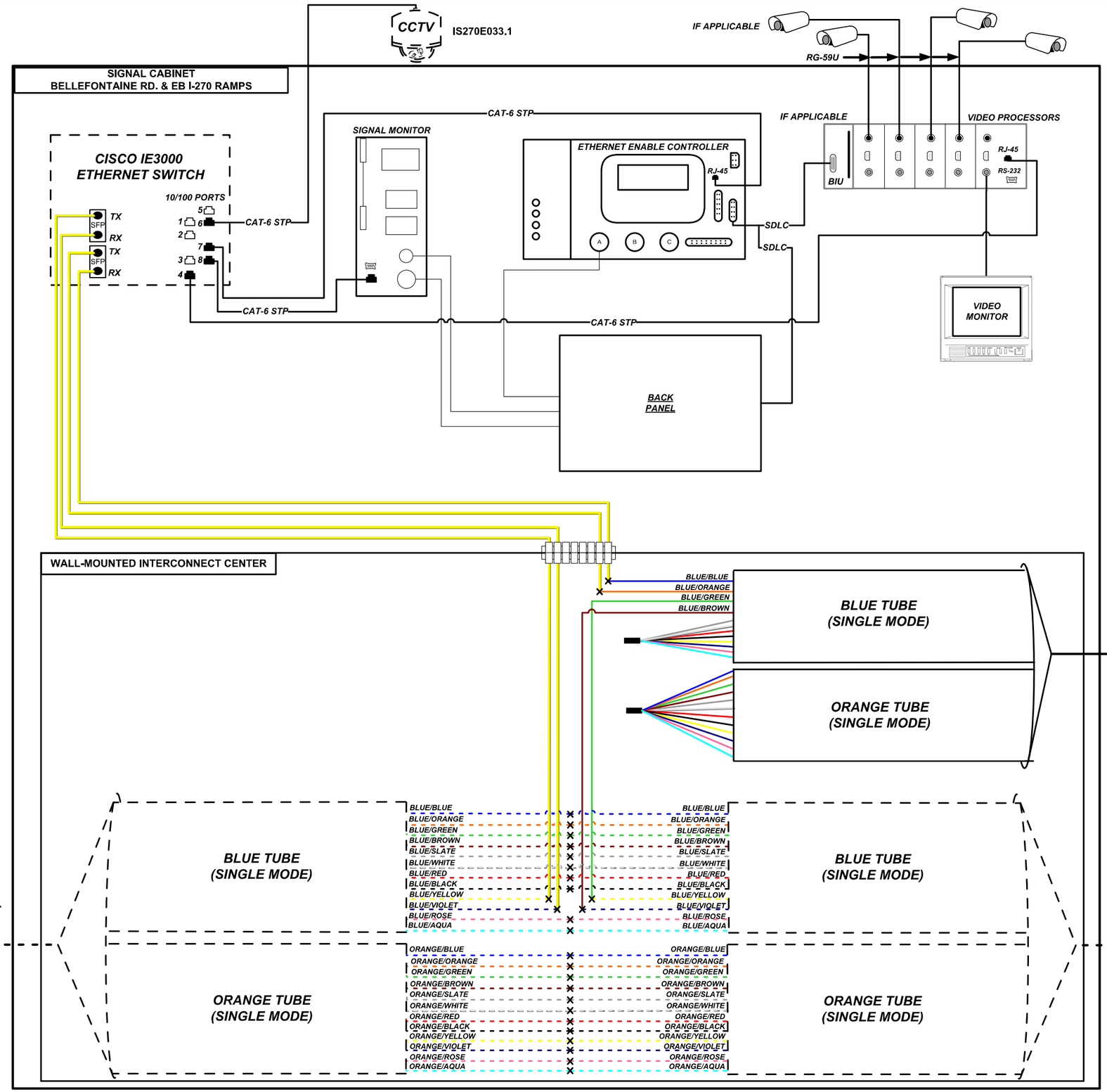

KEY

IS170N123.4	DEVICE IDENTIFIER
CCTV	CCTV CAMERA
CCTV	EXISTING CCTV CAMERA
DMS	DYNAMIC MESSAGE SIGN
	RADAR DETECTION UNIT
	SM PATCH THROUGH FIBER OPTIC JUMPER
	SM EQUIPMENT CONNECTION FIBER OPTIC JUMPER
	SM FIBER OPTIC PIGTAIL
	MM PATCH THROUGH FIBER OPTIC JUMPER
	MM EQUIPMENT CONNECTION FIBER OPTIC JUMPER
	MM FIBER OPTIC PIGTAIL
	BARE FIBER LEFT COILED IN SPLICE TRAY
	EXISTING/PROPOSED FUSION SPLICE
	PATCH PANEL MODULE
	WIRELESS LINK
VDS AP	SENSYS DETECTION SYSTEM

1. MAXIMUM SPLICE LOSS SHALL BE 0.1 dB
2. NO INTERMEDIATE SPLICES ALLOWED
3. ALL SPLICES SHALL BE FUSION SPLICES
4. DASHED LINES INDICATE EXISTING EQUIPMENT OR CABLING.

FIBER SPLICING & BLOCK DIAGRAM IS270E033.1 I-270 AT BELLEFONTAINE EB RAMP SHEET 1 OF 3

STATE OF MISSOURI
CHARLES A. MILLER
NUMBER E-2002000606
REGISTERED PROFESSIONAL ENGINEER
3/20/2026

DATE PREPARED: 10/07/2025
ROUTE: I-270 | STATE: MO
DISTRICT: SL | SHEET NO.: 149
COUNTY: ST. LOUIS
JOB NO.: JSL0021
CONTRACT ID.:
PROJECT NO.:
BRIDGE NO.:

IF A SEAL IS PRESENT ON THIS SHEET IT HAS BEEN ELECTRONICALLY SEALED AND DATED.

DESCRIPTION | DATE | REV.

MISSOURI HIGHWAYS AND TRANSPORTATION COMMISSION
105 WEST CAPITOL
JEFFERSON CITY, MO 65102
1-888-ASK-MODOT (1-888-275-6636)
MoDOT
HNTB
715 KIRK DRIVE
KANSAS CITY, MO 64105
(816) 472-1201

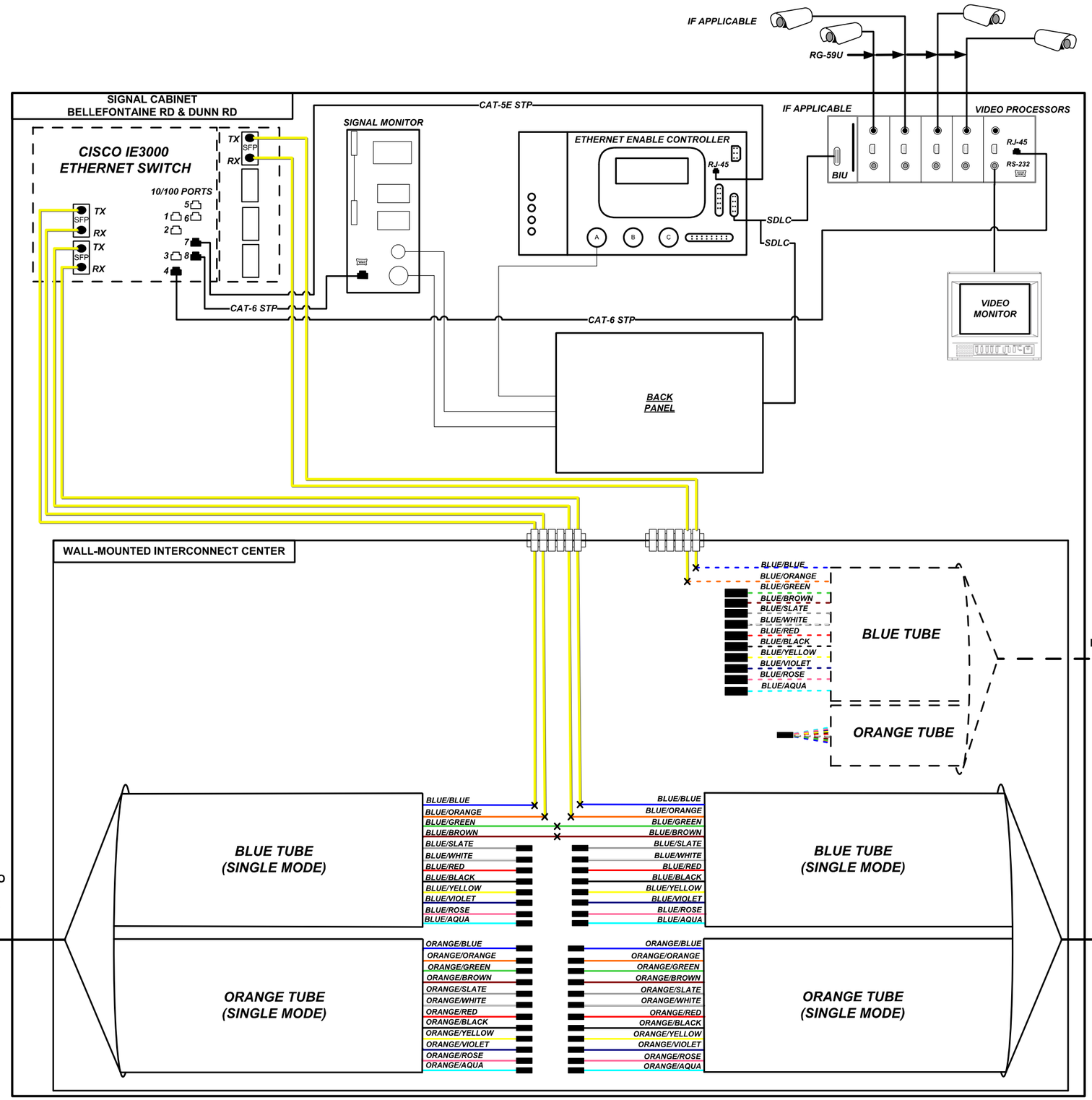

KEY

IS170N123.4	DEVICE IDENTIFIER
CCTV	CCTV CAMERA
CCTV	EXISTING CCTV CAMERA
DMS	DYNAMIC MESSAGE SIGN
	RADAR DETECTION UNIT
	SM PATCH THROUGH FIBER OPTIC JUMPER
	SM EQUIPMENT CONNECTION FIBER OPTIC JUMPER
	SM FIBER OPTIC PIGTAIL
	MM PATCH THROUGH FIBER OPTIC JUMPER
	MM EQUIPMENT CONNECTION FIBER OPTIC JUMPER
	MM FIBER OPTIC PIGTAIL
	BARE FIBER LEFT COILED IN SPLICE TRAY
	EXISTING/PROPOSED FUSION SPLICE
	PATCH PANEL MODULE
	WIRELESS LINK
VDS AP	SENSYS DETECTION SYSTEM

1. MAXIMUM SPLICE LOSS SHALL BE 0.1 dB
2. NO INTERMEDIATE SPLICES ALLOWED
3. ALL SPLICES SHALL BE FUSION SPLICES
4. DASHED LINES INDICATE EXISTING EQUIPMENT OR CABLING.

FIBER SPLICING & BLOCK DIAGRAM

IS270W033.1
BELLEFONTAINE RD AT DUNN RD

SHEET 2 OF 3

STATE OF MISSOURI
CHARLES A. MILLER
NUMBER E-2002000606
REGISTERED PROFESSIONAL ENGINEER
3/20/2026

DATE PREPARED: 10/07/2025
ROUTE: I-270 | STATE: MO
DISTRICT: SL | SHEET NO.: 150
COUNTY: ST. LOUIS
JOB NO.: JSL0021
CONTRACT ID.:
PROJECT NO.:
BRIDGE NO.:

DESCRIPTION | DATE | REV.

IF A SEAL IS PRESENT ON THIS SHEET IT HAS BEEN ELECTRONICALLY SEALED AND DATED.

MISSOURI HIGHWAYS AND TRANSPORTATION COMMISSION
105 WEST CAPITOL
JEFFERSON CITY, MO 65102
1-888-ASK-MODOT (1-888-275-6636)

HNTB
715 KIRK DRIVE
KANSAS CITY, MO 64105
(816) 472-1201

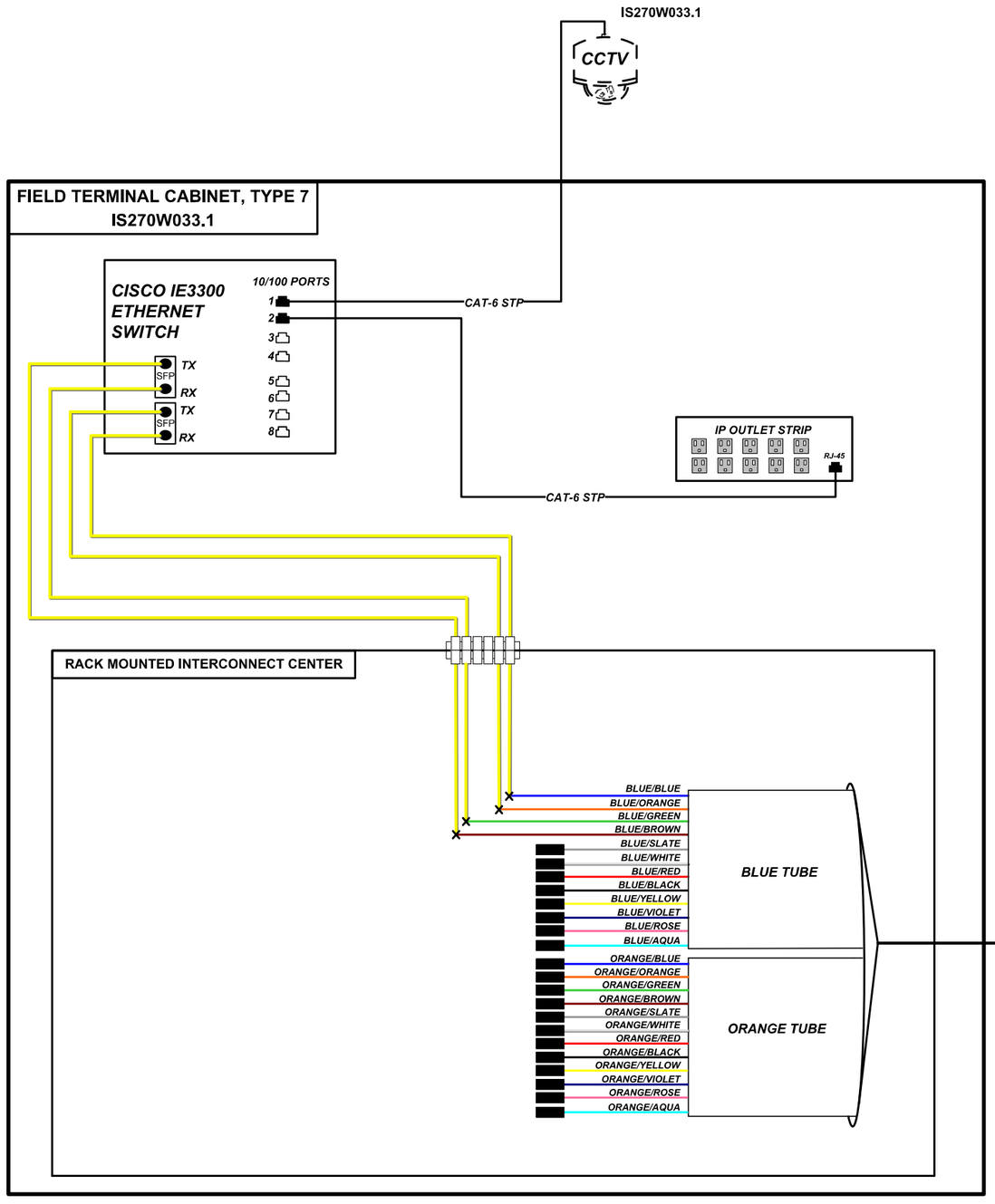

KEY

IS170N123.4	DEVICE IDENTIFIER
CCTV	CCTV CAMERA
CCTV	EXISTING CCTV CAMERA
DMS	DYNAMIC MESSAGE SIGN
	RADAR DETECTION UNIT
	SM PATCH THROUGH FIBER OPTIC JUMPER
	SM EQUIPMENT CONNECTION FIBER OPTIC JUMPER
	SM FIBER OPTIC PIGTAIL
	MM PATCH THROUGH FIBER OPTIC JUMPER
	MM EQUIPMENT CONNECTION FIBER OPTIC JUMPER
	MM FIBER OPTIC PIGTAIL
	BARE FIBER LEFT COILED IN SPLICE TRAY
× ×	EXISTING/PROPOSED FUSION SPLICE
	PATCH PANEL MODULE
	WIRELESS LINK
VDS AP	SENSYS DETECTION SYSTEM

1. MAXIMUM SPLICE LOSS SHALL BE 0.1 dB
2. NO INTERMEDIATE SPLICES ALLOWED
3. ALL SPLICES SHALL BE FUSION SPLICES
4. DASHED LINES INDICATE EXISTING EQUIPMENT OR CABLING.

FIBER SPLICING & BLOCK DIAGRAM

I-270 WEST OF BELLEFONTAINE RD
IS270W033.1

SHEET 3 OF 3

STATE OF MISSOURI
CHARLES A. MILLER
NUMBER E-2002000606
REGISTERED PROFESSIONAL ENGINEER
3/20/2026

DATE PREPARED: 10/07/2025
ROUTE: I-270 | STATE: MO
DISTRICT: SL | SHEET NO.: 151
COUNTY: ST. LOUIS
JOB NO.: JSL0021
CONTRACT ID.:
PROJECT NO.:
BRIDGE NO.:

DESCRIPTION	DATE

IF A SEAL IS PRESENT ON THIS SHEET IT HAS BEEN ELECTRONICALLY SEALED AND DATED.

MISSOURI HIGHWAYS AND TRANSPORTATION COMMISSION
105 WEST CAPITOL
JEFFERSON CITY, MO 65102
1-888-ASK-MODOT (1-888-275-6636)

HNTB
715 KIRK DRIVE
KANSAS CITY, MO 64105
(816) 472-1201

REV.

JSL021_BlockSplice_v3.vsdx 10/07/2025

GENERAL NOTES:

1. SPLICING OF CONDUCTORS SHALL BE IN POLE BASES, JUNCTION BOXES, OR PULL BOXES ONLY.

2. LEVELING NUTS SHALL BE INSTALLED FOR PLUMBING THE POLE. ALL POLES SHALL BE ERECTED PLUMB.

3. LIGHTING CIRCUITS SHALL BE WIRED IN ACCORDANCE WITH THE PLANS. DEVIATIONS SHALL NOT BE PERMITTED WITHOUT PRIOR APPROVAL OF THE ENGINEER.

4. TRENCHED CABLE RUNS SHALL NOT BE IN A STRAIGHT LINE BETWEEN TERMINAL POINTS WHERE FEASIBLE. TO PREVENT EROSION OF EMBANKMENTS INVOLVING HIGH FILLS AND STEEP SIDE SLOPES, THE CONTRACTOR SHALL NOT TRENCH DIRECTLY FROM POLE TO POLE, RATHER, AS DIRECTED BY THE ENGINEER. THE TRENCH SHALL EXTEND FROM THE POLE STRAIGHT DOWN THE SIDE SLOPE RUN ALONG THE TOE OF THE SLOPE, AND THEN STRAIGHT UP THE SIDE SLOPE TO THE NEXT POLE. THE CONTRACTOR WILL BE COMPENSATED FOR THIS ADDITIONAL UNIT DUCT AT ITS AGREED CONTRACT PRICE.

5. ALL CONDUIT TO BE PUSHED UNDER EXISTING PAVEMENT OR TRENCHED UNDER PROPOSED PAVEMENT SHALL BE INSTALLED AT A MINIMUM DEPTH OF 3'-6" TO AVOID CONFLICTS WITH EXISTING OR PROPOSED UNDER DRAIN. THE COST OF INSTALLING THE CONDUIT AT THIS NEW DEPTH SHALL BE INCIDENTAL TO THE CONDUIT.

6. ALL NEW CABLE-CONDUIT AND UNDERGROUND CONDUIT SHALL BE PLACED A MINIMUM OF 2'-6" BELOW THE FLOWLINE OF EXISTING DITCHES AND A MINIMUM OF 2'-0" BENEATH THE GROUND SURFACE AT OTHER LOCATIONS.

7. UNDERGROUND FACILITIES, STRUCTURES, AND UTILITIES HAVE BEEN PLOTTED FROM AVAILABLE SURVEYS AND RECORDS. THE COMMISSION DOES NOT WARRANT THE LOCATIONS OF THESE FACILITIES AS PRECISE. IT IS POSSIBLE THERE MAY BE OTHERS.THE EXISTENCE OF WHICH IS PRESENTLY NOT KNOWN OR SHOWN. IT IS THE CONTRACTOR'S RESPONSIBILITY TO DETERMINE THE EXISTENCE AND PRECISE LOCATION OF ALL FACILITIES AND TO AVOID DAMAGE TO THEM. SEE THE JOB SPECIAL PROVISIONS FOR A LIST OF UTILITY COMPANIES ON OR WITHIN THE VICINITY OF THE PROJECT LIMITS.

8. ANY WORK INDICATED ON THE PLANS THAT EXTENDS BEYOND THE PROJECT LIMITS IS CONSIDERED INCIDENTAL TO AND PART OF THE CONSTRUCTION OF THIS PROJECT.

9. NO DIRECT PAYMENT FOR CLEARING AND GRUBBING.

10. CONTRACTOR TO FIELD VERIFY WITH MODOT STAFF EXISTING LIGHTING CONDUIT PATHWAYS AND CIRCUITS TO BEGINNING REMOVALS. CONTRACTOR TO VERIFY EXISTING LUMINAIRES TO BE UTILIZED IN PLACE WILL REMAIN FED AND OPERATIONAL FOLLOWING INSTALLATION OF THE NEW LIGHTING INFRASTRUCTURE.

11. CONTRACTOR TO REMOVE ANY UNNEEDED JUNCTION BOXES EXCLUDED FROM THIS PLAN THAT WAS BEING USED FOR THE EXISTING LIGHTING CIRCUITS.

12. LIGHTING INFRASTRUCTURE INCLUDING, BUT NOT LIMITED TO, LIGHTING CONTROLLERS, JUNCTION BOXES, AND LUMINAIRES NOT DENOTED ON THE PLANS SHALL BE UTILIZED IN PLACE.

STREET LIGHTING LEGEND

- CONTROLLER, LIGHTING
- CONTROLLER, LIGHTING (EXISTING)
- P.S. POWER SERVICE POLE
- LED-B LUMINAIRE (TYPE 2) ATB0-P303-MVOLT-R2-3K-GRAY-NL-P7-SH
- LED-B LUMINAIRE (TYPE 3) ATB0-P303-MVOLT-R3-3K-GRAY-NL-P7-SH
- UNDERPASS LUMINAIRE HOLOPHANE WCNP-P1-40K-T4M
- EXISTING TOP MOUNT LUMINAIRE
- EXISTING LIGHT POLE w/ ARM
- PULL BOX PREFORMED CLASS 1
- PULL BOX CONCRETE, STANDARD
- PULL BOX (EXISTING)
- POWER SUPPLY ASSEMBLY
- CONDUIT, RIGID (TRENCH)
- CONDUIT, RIGID (PUSHED)
- CONDUIT, RIGID (BRIDGE)
- CABLE-CONDUIT (EXISTING)
- CABLE-CONDUIT
- CONDUIT, RIGID (EXISTING)
- PVC JUNCTION BOX (MOUNTED ON STRUCTURE)

MOUNTING DETAILS FOR UNDERPASS LIGHTING ON BELLEFONTAINE RD

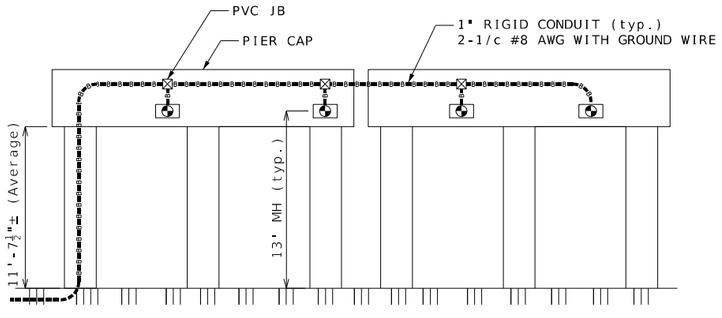

STREET LIGHTING
GENERAL NOTES, AND
WIRING DIAGRAM

STATE OF MISSOURI
JASON LEE HAYNES
NUMBER PE-2004017183
PROFESSIONAL ENGINEER
THIS SHEET HAS BEEN SIGNED, SEALED, AND DATED ELECTRONICALLY

DATE PREPARED 3/25/2026
ROUTE I-270 | STATE MO
DISTRICT SL | SHEET NO. 152
COUNTY ST. LOUIS
JOB NO. JSL0021
CONTRACT ID.
PROJECT NO.
BRIDGE NO.

DESCRIPTION	DATE

IF A SEAL IS PRESENT ON THIS SHEET IT HAS BEEN ELECTRONICALLY SEALED AND DATED.

MISSOURI HIGHWAYS AND TRANSPORTATION COMMISSION
105 WEST CAPITOL
JEFFERSON CITY, MO 65102
1-888-ASK-MODOT (1-888-275-6636)

HDR Engineering, Inc.
1001 Highlands Plaza Drive
Suite 200
St. Louis, MO 63110-1337
314-425-8300
Certificate of Authority: 000856

℄ EXIST. DUNN RD STA. 662+76.80 =
℄ EXIST. BELLEFONTAINE RD STA. 11+72.72

PROPOSED LUMINAIRE A2-1
45' TYPE AT POLE W/ LED-B LUMINAIRE (TOP MOUNT)
STA. 10+95.90, 51.44' RT, ℄ EX. BELLEFONTAINE RD

EXISTING LUMINAIRE

PROPOSED PREFORMED PB4
STA. 11+08.01, 53.03' RT, ℄ EX. BELLEFONTAINE RD

PROPOSED PREFORMED PB5
STA. 662+23.33, 41.92' RT, ℄ EX. DUNN RD

PROPOSED LUMINAIRE A2-2
45' TYPE AT POLE W/ LED-B LUMINAIRE (TOP MOUNT)
STA. 661+60.72, 30.26' RT, ℄ EX. DUNN RD

℄ EX. BELLEFONTAINE RD

EXISTING POWER SERVICE POLE

EXISTING LIGHTING CONTROLLER

INSTALL 120V SIGNAL POWER SUPPLY WITH 2-CIRCUIT 240V LIGHTING DUAL METER
STA. 11+12.86, 70' LT, ℄ EX. BELLEFONTAINE RD

PROPOSED PREFORMED PB1
STA. 11+23.33, 59.54' LT, ℄ EX. BELLEFONTAINE RD

EXISTING LIGHTING CONTROLLER

EXISTING LUMINAIRE

PROPOSED LUMINAIRE A1-1
45' TYPE AT POLE W/ LED-B LUMINAIRE (TOP MOUNT)
STA. 663+82.23, 35.73' LT, ℄ EX. DUNN RD

PROPOSED PREFORMED PB2
STA. 663+43.53, 40.15' RT, ℄ EX. DUNN RD

PROPOSED LUMINAIRE A1-2
45' TYPE AT POLE W/ LED-B LUMINAIRE (TOP MOUNT)
STA. 12+40.92, 48.25' LT, ℄ EX. BELLEFONTAINE RD

EXISTING LUMINAIRE

EXISTING LUMINAIRE

EXISTING LUMINAIRE

EXISTING PB

EXISTING LUMINAIRE

℄ EXIST. DUNN RD

PROPOSED PREFORMED PB3
STA. 12+57.92, 53.81' LT, ℄ EX. BELLEFONTAINE RD

PROPOSED UNDERPASS LUMINAIRES
(SEE GENERAL NOTE SHEET FOR MOUNTING DETAILS)
WPA1-3: STA. 12+77.53, 55.70' LT, ℄ EX. BELLEFONTAINE RD
WPA1-4: STA. 12+98.93, 55.70' LT, ℄ EX. BELLEFONTAINE RD
WPA1-5: STA. 13+20.34, 55.70' LT, ℄ EX. BELLEFONTAINE RD
WPA1-6: STA. 13+41.75, 55.70' LT, ℄ EX. BELLEFONTAINE RD

℄ EXIST. I-270

EXISTING LUMINAIRE

EXISTING PB

PROPOSED PREFORMED PB6
STA. 12+42.32, 43.31' RT, ℄ EX. BELLEFONTAINE RD

PROPOSED UNDERPASS LUMINAIRES
(SEE GENERAL NOTE SHEET FOR MOUNTING DETAILS)
WPA2-3: STA. 12+69.92, 29.26' RT, ℄ EX. BELLEFONTAINE RD
WPA2-4: STA. 12+91.35, 29.26' RT, ℄ EX. BELLEFONTAINE RD
WPA2-5: STA. 13+12.78, 29.26' RT, ℄ EX. BELLEFONTAINE RD
WPA2-6: STA. 13+34.21, 29.26' RT, ℄ EX. BELLEFONTAINE RD

PROPOSED LUMINAIRE B3
45' TYPE AT POLE W/ LED-B LUMINAIRE (TOP MOUNT)
STA. 13+81.85, 48.25' LT, ℄ EX. BELLEFONTAINE RD

EXISTING LUMINAIRE

PROPOSED PREFORMED PB7
STA. 1+00.59, 28.45' LT, ℄ EX. RAMP 4

℄ EXIST. RAMP 4

PROPOSED LUMINAIRE B4
45' TYPE AT POLE W/ LED-B LUMINAIRE (TOP MOUNT)
STA. 17+00.51, 28.47' LT, ℄ EX. RAMP 2

EXISTING LUMINAIRE

℄ EXIST. RAMP 2

PROPOSED LUMINAIRE B2
45' TYPE AT POLE W/ LED-B LUMINAIRE (TOP MOUNT)
STA. 1+16.19, 30.57' LT, ℄ EXIST. RAMP 4

INTERCEPT EXISTING LIGHTING CABLE-CONDUIT
INSTALL NEW PREFORMED PB10 AND SPLICE CABLES IN THE NEW PB
PROPOSED PREFORMED PB8
STA. 0+98.80, 11.55' RT, ℄ EX. RAMP 4

EXISTING LUMINAIRE

EXISTING PB

INTERCEPT EXISTING CABLE-CONDUIT
INSTALL NEW PREFORMED PB12
SPLICE CABLES IN NEW PULLBOX
STA. 15+00, 37.24' RT, ℄ EX. RAMP 2

℄ EXIST. RAMP 4 STA. 0+00.00 =
℄ EXIST. BELLEFONTAINE RD STA. 14+79.56

PROPOSED PREFORMED PB9
STA. 0+44.18, 23.57' RT, ℄ EX. RAMP 4

PROPOSED PREFORMED PB10
STA. 17+18.35, 28.38' LT, ℄ EX. RAMP 2

EXISTING LUMINAIRE

PROPOSED PREFORMED PB11
STA. 17+19.37, 31.72' RT, ℄ EX. RAMP 2

PROPOSED LUMINAIRE B1
45' TYPE AT POLE W/ LED-B LUMINAIRE (TOP MOUNT)
STA. 15+59.60, 33.04' LT, ℄ EX. BELLEFONTAINE RD

EXISTING PB

EXISTING PB
INSTALL NEW 1" CABLE-CONDUIT #8 AWG FROM
THE EXISTING PB TO THE NEW LUMINAIRE B1
SPLICE CABLES IN THIS EXISTING PB

℄ EXIST. RAMP 2 STA. 17+98.89 =
℄ EXIST. BELLEFONTAINE RD STA. 14+79.56

EXISTING LUMINAIRE

EXISTING POWER SERVICE POLE

EXISTING DUAL SIGNAL/LIGHTING METER PEDESTAL
WITH LIGHTING CONTROLLER B

REMOVE EXISTING CABLE-CONDUIT

SCALE
0 50 100 150

I-270 AT BELLEFONTAINE
LIGHTING PLAN
STA 656+00 TO STA 669+50

JASON LEE HAYNES
STATE OF MISSOURI
NUMBER PE-2004017183
PROFESSIONAL ENGINEER
THIS SHEET HAS BEEN SIGNED, SEALED, AND DATED ELECTRONICALLY

DATE PREPARED 3/25/2026
ROUTE I-270 | STATE MO
DISTRICT SL | SHEET NO. 153
COUNTY ST. LOUIS
JOB NO. JSL0021
CONTRACT ID.
PROJECT NO.
BRIDGE NO.

DESCRIPTION | DATE

IF A SEAL IS PRESENT ON THIS SHEET IT HAS BEEN ELECTRONICALLY SEALED AND DATED.

MISSOURI HIGHWAYS AND TRANSPORTATION COMMISSION
105 WEST CAPITOL
JEFFERSON CITY, MO 65102
1-888-ASK-MODOT (1-888-275-6636)

HDR Engineering, Inc.
1001 Highlands Plaza Drive
Suite 200
St. Louis, MO 63110-1337
314-425-8300
Certificate of Authority: 000856

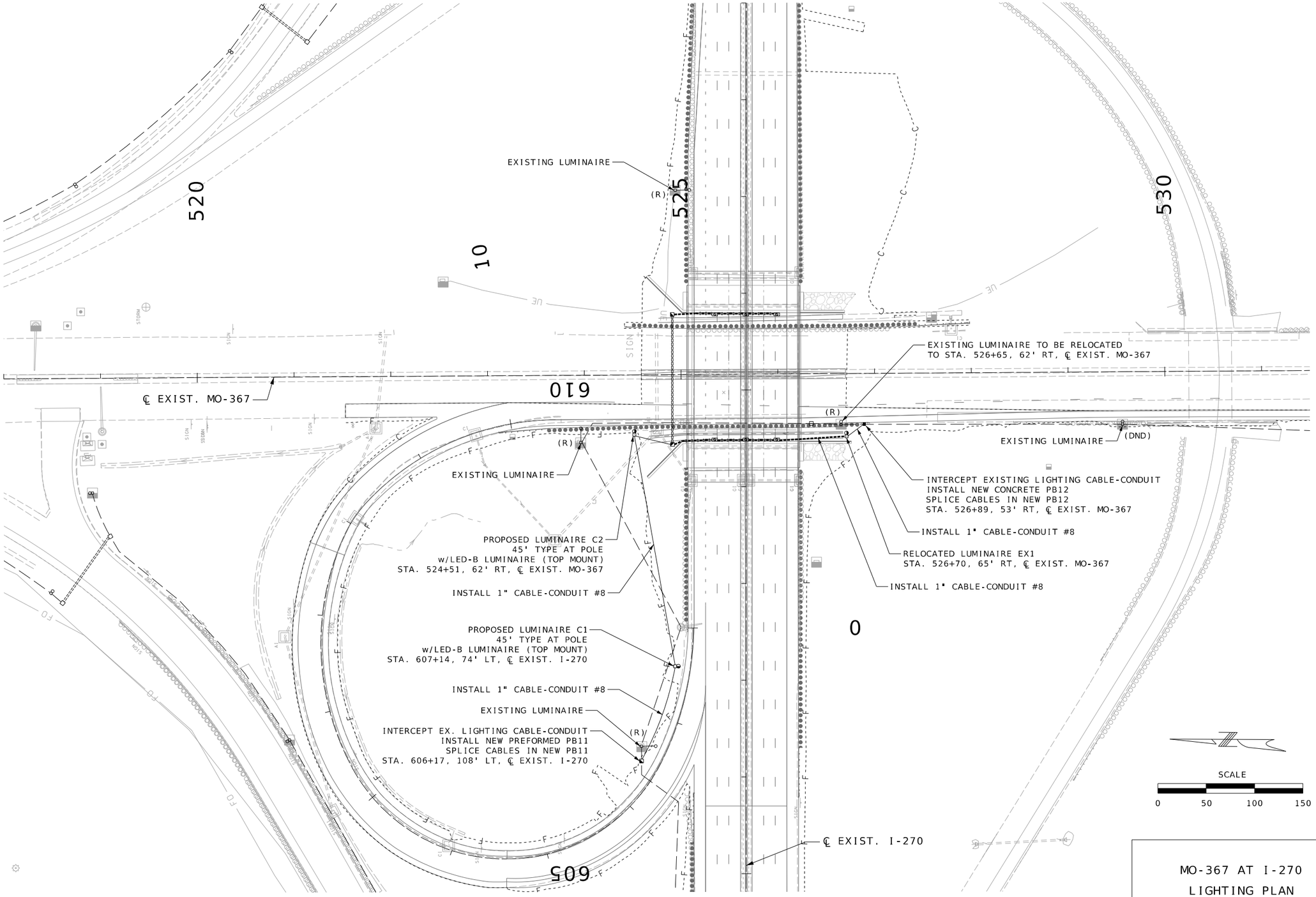

MO-367 AT I-270
LIGHTING PLAN
STA 518+00 TO STA 531+50

STATE OF MISSOURI
JASON LEE HAYNES
NUMBER PE-2004017183
PROFESSIONAL ENGINEER

THIS SHEET HAS BEEN SIGNED, SEALED, AND DATED ELECTRONICALLY

DATE PREPARED	3/25/2026
ROUTE	I-270
STATE	MO
DISTRICT	SL
SHEET NO.	154
COUNTY	ST. LOUIS
JOB NO.	JSL0021
CONTRACT ID.	
PROJECT NO.	
BRIDGE NO.	

DATE	DESCRIPTION

IF A SEAL IS PRESENT ON THIS SHEET IT HAS BEEN ELECTRONICALLY SEALED AND DATED.

MISSOURI HIGHWAYS AND TRANSPORTATION COMMISSION

MoDOT

105 WEST CAPITOL
JEFFERSON CITY, MO 65102
1-888-ASK-MODOT (1-888-275-6636)

HDR Engineering, Inc.
1001 Highlands Plaza Drive
Suite 200
St. Louis, MO 63110-1337
314-425-8300
Certificate of Authority: 000856

c:\pwworking\central01\d4324513\151_LT03_JSL0021_I50_MO-367.dgn 2:52:58 PM 3/25/2026

EXISTING LUMINAIRE
REPLACE WITH 45' TYPE AT POLE
w/LED-B LUMINAIRE D1 (TOP MOUNT)
STA. 251+32, 213' RT, ℄ EXIST. MO-367

EXISTING LUMINAIRE
REPLACE WITH 45' TYPE AT POLE
w/LED-B LUMINAIRE D2 (TOP MOUNT)
STA. 252+60, 209' RT, ℄ EXIST. MO-367

EXISTING LUMINAIRE
REPLACE WITH 45' TYPE AT POLE
w/LED-B LUMINAIRE D3 (TOP MOUNT)
STA. 505+14, 212' RT, ℄ EXIST. MO-367

℄ EXIST. MO-367

PROPOSED LUMINAIRE D5
45' TYPE AT POLE w/LED-B LUMINAIRE (TOP MOUNT)
STA. 513+60, 62' LT, ℄ EXIST. MO-367

INSTALL 1" CABLE-CONDUIT #8

EXISTING LUMINAIRE

INTERCEPT THE EXISTING LIGHTING CABLE-CONDUIT
AND INSTALL NEW LUMINAIRE D4
45' TYPE AT POLE w/LED-B LUMINAIRE (TOP MOUNT)
STA. 515+50, 85' RT, ℄ EXIST. MO-367

EXISTING LUMINAIRE
INSTALL NEW PREFORMED PB14
STA. 514+74, 74' LT, ℄ EXIST. MO-367

EXISTING LUMINAIRE
REPLACE WITH 45' TYPE AT POLE w/LED-B LUMINAIRE D8 (TOP MOUNT)
STA. 638+16, 72' LT, ℄ EXIST. I-270

EXISTING LIGHTING CONTROLLER

EXISTING LUMINAIRE

INSTALL 1" CABLE-CONDUIT #8

PROPOSED LUMINAIRE D6
45' TYPE AT POLE w/LED-B LUMINAIRE (TOP MOUNT)
STA. 622+68, 82' LT, ℄ EXIST. I-270

EXISTING LUMINAIRE

INTERCEPT THE EXISTING LIGHTING CABLE-CONDUIT
AND INSTALL NEW LUMINAIRE D7
45' TYPE AT POLE w/LED-B LUMINAIRE (TOP MOUNT)
STA. 622+39, 67' RT, ℄ EXIST. I-270

℄ EXIST. I-270

NOTE: SEE LIGHTING PLAN 154 FOR DETAILS

EXISTING PB

INTERCEPT EXISTING LIGHTING CABLE-CONDUIT
INSTALL NEW PREFORMED PB13
SPLICE CABLES IN NEW PB13
STA. 536+09, 89' LT, ℄ EXIST. MO-367

INSTALL 1" CABLE-CONDUIT #8

EXISTING LUMINAIRE

EXISTING LUMINAIRE
REPLACE WITH 45' TYPE AT POLE
w/LED-B LUMINAIRE C3 (TOP MOUNT)
STA. 537+03, 64' RT, ℄ EXIST. MO-367

PROPOSED LUMINAIRE D9
45' TYPE AT POLE w/LED-B LUMINAIRE (TENON MOUNT)
STA. 536+50, 79' LT, ℄ EXIST. MO-367

SCALE
0 200 400 600 800 1000

ADDITIONAL
MO-367 AND I-270
LIGHTING PLAN

STATE OF MISSOURI
JASON LEE HAYNES
NUMBER PE-2004017183
PROFESSIONAL ENGINEER
THIS SHEET HAS BEEN SIGNED, SEALED, AND DATED ELECTRONICALLY

DATE PREPARED 3/25/2026
ROUTE I-270 | STATE MO
DISTRICT SL | SHEET NO. 155
COUNTY ST. LOUIS
JOB NO. JSL0021
CONTRACT ID.
PROJECT NO.
BRIDGE NO.

DESCRIPTION | DATE

IF A SEAL IS PRESENT ON THIS SHEET IT HAS BEEN ELECTRONICALLY SEALED AND DATED.

MISSOURI HIGHWAYS AND TRANSPORTATION COMMISSION
105 WEST CAPITOL
JEFFERSON CITY, MO 65102
1-888-ASK-MODOT (1-888-275-6636)

HDR Engineering, Inc.
1001 Highlands Plaza Drive
Suite 200
St. Louis, MO 63110-1337
314-425-8300
Certificate of Authority: 000856

c:\pwworking\central01\d4324513\152_LT04_JSL0021_I200_MO-367.dgn 2:53:06 PM 3/25/2026

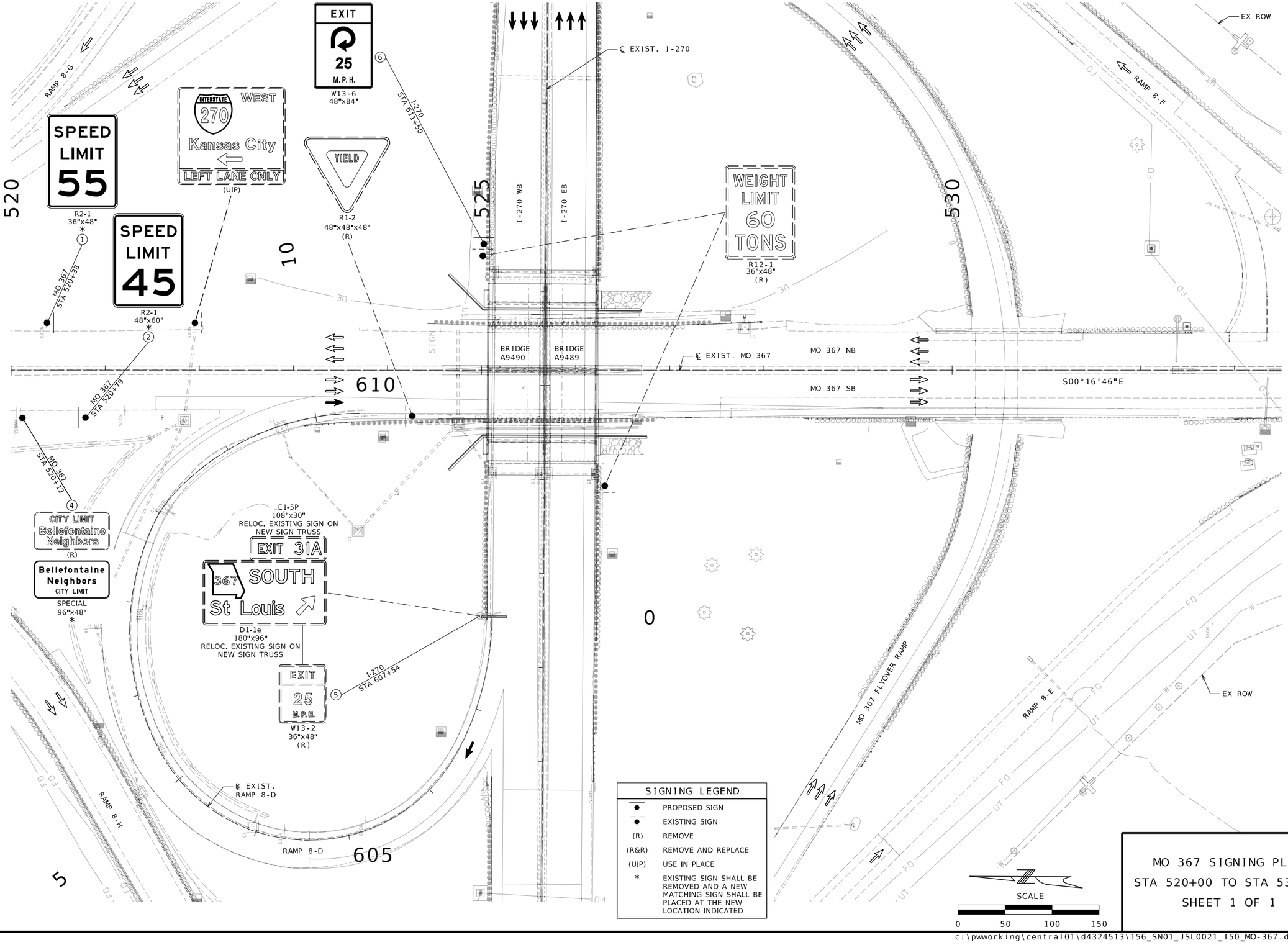

SIGNING LEGEND

●	PROPOSED SIGN
●	EXISTING SIGN
(R)	REMOVE
(R&R)	REMOVE AND REPLACE
(UIP)	USE IN PLACE
*	EXISTING SIGN SHALL BE REMOVED AND A NEW MATCHING SIGN SHALL BE PLACED AT THE NEW LOCATION INDICATED

SCALE
0 50 100 150

MO 367 SIGNING PLAN
STA 520+00 TO STA 533+50
SHEET 1 OF 1

STATE OF MISSOURI
EUGENE LOUIS KUECKER JR.
NUMBER PE-2011000912
PROFESSIONAL ENGINEER
THIS SHEET HAS BEEN SIGNED, SEALED, AND DATED ELECTRONICALLY.

IF A SEAL IS PRESENT ON THIS SHEET IT HAS BEEN ELECTRONICALLY SEALED AND DATED.

DATE PREPARED: 3/25/2026
ROUTE: I-270 | STATE: MO
DISTRICT: SL | SHEET NO.: 156
COUNTY: ST. LOUIS
JOB NO.: JSL0021
CONTRACT ID.:
PROJECT NO.:
BRIDGE NO.:

DESCRIPTION	DATE

MISSOURI HIGHWAYS AND TRANSPORTATION COMMISSION
105 WEST CAPITOL
JEFFERSON CITY, MO 65102
1-888-ASK-MODOT (1-888-275-6636)

HDR Engineering, Inc.
1001 Highlands Plaza Drive
Suite 200
St. Louis, MO 63110-1337
314-425-8300
Certificate of Authority: 000856

c:\pwworking\central01\d4324513\156_SN01_JSL0021_I50_MO-367.dgn 2:53:15 PM 3/25/2026

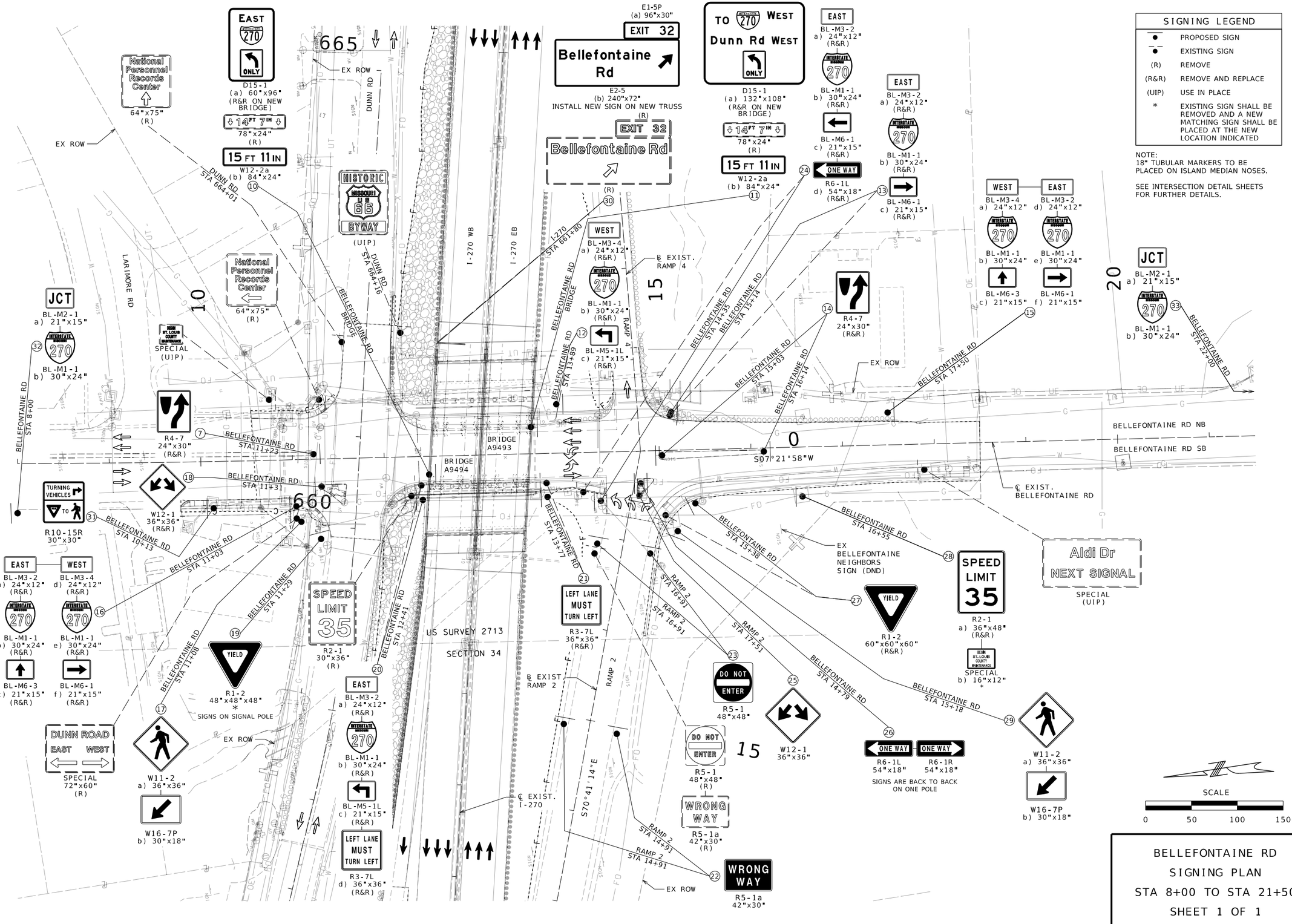

SIGNING LEGEND

●	PROPOSED SIGN
●	EXISTING SIGN
(R)	REMOVE
(R&R)	REMOVE AND REPLACE
(UIP)	USE IN PLACE
*	EXISTING SIGN SHALL BE REMOVED AND A NEW MATCHING SIGN SHALL BE PLACED AT THE NEW LOCATION INDICATED

NOTE:
18" TUBULAR MARKERS TO BE PLACED ON ISLAND MEDIAN NOSES.

SEE INTERSECTION DETAIL SHEETS FOR FURTHER DETAILS.

BELLEFONTAINE RD
SIGNING PLAN
STA 8+00 TO STA 21+50
SHEET 1 OF 1

STATE OF MISSOURI
EUGENE LOUIS KUEKER JR.
NUMBER PE-2010000912
PROFESSIONAL ENGINEER

THIS SHEET HAS BEEN SIGNED, SEALED, AND DATED ELECTRONICALLY.

IF A SEAL IS PRESENT ON THIS SHEET IT HAS BEEN ELECTRONICALLY SEALED AND DATED.

DATE PREPARED	3/25/2026
ROUTE	STATE
I-270	MO
DISTRICT	SHEET NO.
SL	157
COUNTY	ST. LOUIS
JOB NO.	JSL0021
CONTRACT ID.	
PROJECT NO.	
BRIDGE NO.	

DATE	DESCRIPTION

MISSOURI HIGHWAYS AND TRANSPORTATION COMMISSION

105 WEST CAPITOL
JEFFERSON CITY, MO 65102
1-888-ASK-MODOT (1-888-275-6636)

HDR Engineering, Inc.
1001 Highlands Plaza Drive
Suite 200
St. Louis, MO 63110-1337
314-425-8300
Certificate of Authority: 000856

EFFECTIVE: 07-01-2022

SIGNS (902 SIGNAL SIGNS TABULATED ON D-37A SHEET)						CONCRETE EMBEDDED FOOTINGS	STRUCTURAL STEEL POSTS *						PIPE POSTS *					BACKING BARS **				U-CHANNEL POST	PERFORATED SQUARE STEEL TUBE												BREAK-AWAY	REMARKS AND OTHER REQUIRED ITEMS
																							2 IN. POST						2.5 IN. POST							
																										ANCHORS					ANCHORS				
SIGN NO.	SIGN SIZE	STA.	HORZ CLEAR IF NOT STD	LOC.	SIGN STL. SHT. NO.	ITEM NO.	POST DES NO.	POST NO.1	POST NO.2	POST NO.3	LBS PER FT	TOTAL ITEM NO.	PIPE SIZE	POST NO.1	POST NO.2	LBS PER FT	TOTAL ITEM NO.	2" x 3/8" BARS 2.55 LBS PER FT NO.	LGTH	TOTAL	TOTAL	ITEM NO.	POST NO.1	POST NO.2	TOTAL ITEM NO.	DRIVEN 12-GA. ITEM NO.	DRIVEN 7-GA. ITEM NO.	CONCRETE 12-GA. ITEM NO.	POST NO.1	POST NO.2	TOTAL ITEM NO.	2.25" INSERT (6 FT.) ITEM NO.	DRIVEN 7-GA. ITEM NO.	CONCRETE 7-GA. ITEM NO.	ASSEMBLY ITEM NO.	
						CY		LF	LF	LF		LBS	IN.	LF	LF		LBS	EACH	IN.	LF	LBS	LF	LF	LF		EA	EA	EA	LF	LF		EA	EA	EA	EA	
1	36"x48"	520+38		MO 367		0.13							2.5	15.75		5.79	91.19																			
2	48"x60"	520+79		MO 367		0.36							4	15.25		10.79	164.55																			
4	96"x48"	520+12		MO 367		0.72							4	16.5	16.75	10.79	358.77																			
6	48"x84"	611+50		I-270		0.36							4	19.0		10.79	205.01																			
7	24"x30"	11+23		BELLEFONTAINE RD		0.13							2.5	11.75		5.79	68.03																			
10	SEE BRIDGE PLANS																																			
11	SEE BRIDGE PLANS																																			
12	ASSEMBLY	13+89		BELLEFONTAINE RD		0.13							2.5	14.75		5.79	85.40																			
13	ASSEMBLY	15+14		BELLEFONTAINE RD		0.13							2.5	15		5.79	86.85																			
14	24"X30"	15+03		BELLEFONTAINE RD		0.13							2.5	11.75		5.79	68.03																			
14	24"X30"	16+14		BELLEFONTAINE RD		0.13							2.5	11.75		5.79	68.03																			
15	ASSEMBLY	17+50		BELLEFONTAINE RD		0.13							2.5	16.25		5.79	94.09	6	50	25	64															
16	ASSEMBLY	11+03		BELLEFONTAINE RD		0.13							2.5	14.75		5.79	85.40	6	50	25	64															
17	ASSEMBLY	11+08		BELLEFONTAINE RD		0.13							2.5	15.5		5.79	89.75																			
18	36"X36"	11+31		BELLEFONTAINE RD		0.13							2.5	13		5.79	75.27																			
19	48"x48"x48"	11+29		BELLEFONTAINE RD		0.36							4	14		10.79	151.06																			
20	ASSEMBLY	12+41		BELLEFONTAINE RD		0.13							2.5	17.75		5.79	102.77																			
21	36"x36"	13+77		BELLEFONTAINE RD		0.13							2.5	14		5.79	81.06																			
22	42"x30"	14+91		RAMP 2		0.13							2.5	14.75		5.79	85.40																			
22	42"x30"	14+91		RAMP 2		0.13							2.5	15		5.79	86.85																			
23	48"x48"	16+91		RAMP 2		0.36							4	16.5		10.79	178.04																			
23	48"x48"	16+91		RAMP 2		0.36							4	16		10.79	172.64																			
24	ASSEMBLY	14+35		BELLEFONTAINE RD		0.13							2.5	16.25		5.79	94.09																			
25	36"x36"	17+51		RAMP 2		0.13							2.5	13		5.79	75.27																			
26	ASSEMBLY	14+79		BELLEFONTAINE RD		0.13							2.5	10.75		5.79	62.24																			
27	60"x60"x60"	15+38		BELLEFONTAINE RD		0.36							4	15.75		10.79	169.94																			
28	ASSEMBLY	16+55		BELLEFONTAINE RD		0.13							2.5	15		5.79	86.85																			
29	ASSEMBLY	15+18		BELLEFONTAINE RD		0.13							2.5	15.5		5.79	89.75																			
31	30"x30"	10+13		BELLEFONTAINE RD		0.13							2.5	13.75		5.79	79.61																			
32	ASSEMBLY	08+00		BELLEFONTAINE RD		0.13							2.5	13.5		5.79	78.17																			
33	ASSEMBLY	22+00		BELLEFONTAINE RD		0.13							2.5	13.5		5.79	78.17																			
	SUBTOTAL					5.7						0					3212.3				128	0		0	0	0	0		0	0	0	0	0	0		
	TOTAL					5.7						0					3350.0				**	0		0	0	0	0		0	0	0	0	0	0		

* BREAKAWAY ASSEMBLY IS INCIDENTAL FOR STRUCTURAL STEEL AND PIPE POSTS.
** BACKING BARS ARE TOTALED WITH STRUCTURAL STEEL OR PIPE POSTS.

ROUND PIPE POST AND FOOTING DATA TABLE

NOM.SIZE (IN.)	WEIGHT LBS/FT	WEIGHT LBS/IN	STUB LENGTH	FOOTING DIA.	FOOTING DEPTH	CONCRETE C.Y.
2½	5.79	0.48	4'- 3½"	12"	4-6"	0.13
3	7.58	0.63	4'- 3½"	12"	4-6"	0.13
4	10.79	0.90	5'- 3½"	18"	5-6"	0.36

STRUCTURAL STEEL POST AND FOOTING DATA TABLE

POST DES. NO.	NOM. SIZE	POST WEIGHT LBS/FT	POST WEIGHT LBS/IN	STUB LENGTH	FOOTING DIA.	LEVEL GROUND DEPTH	LEVEL GROUND C.Y.	6:1 GRADE DEPTH	6:1 GRADE C.Y.	4:1 GRADE DEPTH	4:1 GRADE C.Y.	3:1 OR 2:1 GRADE DEPTH	3:1 OR 2:1 GRADE C.Y.
1	W6	9.0	0.75	3'-0"	15"	3'-0"	0.14	3'-2"	0.15	3'-3"	0.16	3'-6"	0.17
2	W6	15.0	1.25	4'-0"	24"	4'-0"	0.47	4'-2"	0.50	4'-3"	0.51	4'-6"	0.54
3	W8	18.0	1.50	4'-6"	28"	4'-6"	0.71	4'-8"	0.73	4'-9"	0.74	5'-0"	0.78
4	W10	22.0	1.83	5'-0"	36"	5'-0"	1.31	5'-2"	1.36	5'-3"	1.39	5'-6"	1.45
5	W10	26.0	2.17	5'-0"	36"	5'-0"	1.31	5'-3"	1.37	5'-5"	1.43	5'-9"	1.52
6	W12	35.0	2.92	5'-6"	36"	5'-6"	1.44	5'-9"	1.52	5'-11"	1.56	6'-3"	1.65

STATE OF MISSOURI
EUGENE LOUIS KUEKER JR.
NUMBER PE-2010000912
PROFESSIONAL ENGINEER
THIS SHEET HAS BEEN SIGNED, SEALED, AND DATED ELECTRONICALLY.

IF A SEAL IS PRESENT ON THIS SHEET IT HAS BEEN ELECTRONICALLY SEALED AND DATED.

DATE PREPARED 3/25/2026
ROUTE I-270 | STATE MO
DISTRICT SL | SHEET NO. 158
COUNTY ST. LOUIS
JOB NO. JSL0021
CONTRACT ID.
PROJECT NO.
BRIDGE NO.

DESCRIPTION | DATE

MISSOURI HIGHWAYS AND TRANSPORTATION COMMISSION
105 WEST CAPITOL
JEFFERSON CITY, MO 65102
1-888-ASK-MODOT (1-888-275-6636)

HDR Engineering, Inc.
1001 Highlands Plaza Drive
Suite 200
St. Louis, MO 63110-1337
314-425-8300
Certificate of Authority: 000856

EFFECTIVE: 10-01-2016

STANDARD SIGN ASSEMBLIES

SIGN NO.	STA.	LOCATION	TYPE	SIGN DESCRIPTION, SIZES, AND NUMBER OF EACH																								
			SH	SH	SH	SH	SH	SH	SH	SH	SH	SH	SH	SH	SH	SH	SH	SH	SH	SH	SH	SHF	SHF	SHF	STF	SHF
			M1-1	M2-1	M3-2	M3-4	M5-1L	M6-1	M6-3	R1-2	R1-2	R2-1	R2-1	R3-7L	R4-7	R5-1	R5-1a	R6-1L	R6-1R	R10-15R	W11-2	W12-1	W12-2a	W13-6	W16-7P
			30x24	21x15	24x12	24x12	21x15	21x15	21x15	48x48x48	60x60x60	36x48	48x60	36x36	24x30	48x48	42x30	54x18	54x18	30x30	36x36	36x36	84x24	48x84	30x18
1	520+38	MO 367										1																
2	520+79	MO 367											1															
4	520+12	MO 367																										
6	611+50	I-270																								1		
7	11+23	BELLEFONTAINE RD													1													
10	BRIDGE	BELLEFONTAINE RD																					1					
11	BRIDGE	BELLEFONTAINE RD																					1					
12	13+89	BELLEFONTAINE RD	1			1	1																					
13	15+14	BELLEFONTAINE RD	1		1			1																				
14	15+03	BELLEFONTAINE RD													1													
14	16+14	BELLEFONTAINE RD													1													
15	17+50	BELLEFONTAINE RD	2		1	1		1	1																			
16	11+03	BELLEFONTAINE RD	2		1	1		1	1																			
17	11+08	BELLEFONTAINE RD																			1							1
18	11+31	BELLEFONTAINE RD																				1						
19	11+29	BELLEFONTAINE RD								1																		
20	12+41	BELLEFONTAINE RD	1		1		1							1														
21	13+77	BELLEFONTAINE RD												1														
22	14+91	RAMP 2															1											
22	14+91	RAMP 2															1											
23	16+91	RAMP 2														1												
23	16+91	RAMP 2														1												
24	14+35	BELLEFONTAINE RD	1		1			1										1										
25	17+51	RAMP 2																				1						
26	14+79	BELLEFONTAINE RD																1	1									
27	15+38	BELLEFONTAINE RD									1																	
28	16+55	BELLEFONTAINE RD										1																
29	15+18	BELLEFONTAINE RD																			1							1
30	661+80	I-270																										
31	10+13	BELLEFONTAINE RD																		1								
32	8+00	BELLEFONTAINE RD	1	1																								
33	22+00	BELLEFONTAINE RD	1	1																								
TOTAL			10	2	5	3	2	4	2	1	1	2	1	2	3	2	2	2	1	1	2	2	2	1	2			

IF A SEAL IS PRESENT ON THIS SHEET IT HAS BEEN ELECTRONICALLY SEALED AND DATED.

STATE OF MISSOURI
EUGENE LOUIS KUEKER JR.
NUMBER PE-2011000912
PROFESSIONAL ENGINEER
THIS SHEET HAS BEEN SIGNED, SEALED, AND DATED ELECTRONICALLY.

DATE PREPARED 3/25/2026

ROUTE	STATE
I-270	MO
DISTRICT	SHEET NO.
SL	159

COUNTY: ST. LOUIS
JOB NO.: JSL0021
CONTRACT ID.:
PROJECT NO.:
BRIDGE NO.:

DATE	DESCRIPTION

MISSOURI HIGHWAYS AND TRANSPORTATION COMMISSION
105 WEST CAPITOL
JEFFERSON CITY, MO 65102
1-888-ASK-MODOT (1-888-275-6636)

HDR Engineering, Inc.
1001 Highlands Plaza Drive
Suite 200
St. Louis, MO 63110-1337
314-425-8300
Certificate of Authority: 000856

STANDARD SIGN ASSEMBLIES

STANDARD SIGN OR SPECIAL SIGN NUMBER	SIGN DETAIL SHEET NO.	NO. EACH	SIZE	SIZE, TYPE & SQUARE FEET		
				FLAT SHEET SH ITEM NO. 9035004A	FLAT SHEET FLUORESCENT SHF * ITEM NO. 9035069A	STRUCTURAL ST ITEM NO. 9035011A
I-270 EAST WITH DIRECTIONAL ARROW (LEFT) - D15-1	163	1	60 x 96			40
DUNN RD TO I-270 WEST WITH DIRECTIONAL ARROW (LEFT) - D15-1	163	1	132 x 108			99
EXIT 32 - E1-5P	164	1	96 x 30	20		
BELLEFONTAINE RD EXIT DIRECTION - E2-5	164	1	240 x 72	120		
INTERSTATE ROUTE SIGN - M1-1	STD	10	30 x 24	50		
JUNCTION - M2-1	STD	2	21 x 15	4		
EAST - M3-2	STD	5	24 x 12	10		
WEST - M3-4	STD	3	24 x 12	6		
DIRECTIONAL ARROW (ADVANCE LEFT) - M5-1L	STD	2	21 x 15	4		
DIRECTIONAL ARROW (RIGHT/LEFT) - M6-1	STD	4	21 x 15	8		
DIRECTIONAL ARROW (STRAIGHT) - M6-3	STD	2	21 x 15	4		
YIELD - R1-2	STD	1	48 x 48	8		
YIELD - R1-2	STD	1	60 x 60	13		
SPEED LIMIT - R2-1	STD	2	36 x 48	24		
SPEED LIMIT - R2-1	STD	1	48 x 60	20		
LEFT LANE MUST TURN LEFT - R3-7L	STD	2	36 x 36	18		
KEEP RIGHT - R4-7	STD	3	24 x 30	15		
DO NOT ENTER - R5-1	STD	2	48 x 48	32		
WRONG WAY - R5-1a	STD	2	42 x 30	18		
ONE WAY LEFT - R6-1L	STD	2	54 x 18	14		
ONE WAY RIGHT - R6-1R	STD	1	54 x 18	7		
RIGHT TURNING VEHICLES YIELD TO PEDESTRIANS - R10-15R	STD	1	30 x 30	6		
PEDESTRIAN - W11-2	STD	2	36 x 36		18	
DOUBLE DOWN ARROW - W12-1	STD	2	36 x 36		18	
15'-11" CLEARANCE SIGN - W-12-2a	162	2	84 x 24			28
ADVISORY EXIT/SPEED - W13-6	161	1	48 x 84			28
DIRECTIONAL ARROW (45 DEGREE DOWN LEFT) - W16-7P	STD	2	30 x 18		8	
BEGIN ST. LOUIS COUNTY MAINTENANCE - SPECIAL	STD	1	16 x 12	1		
CITY LIMIT BELLEFONTAINE NEIGHBORS - SPECIAL	161	1	96 x 48			32
		TOTAL		402	44	227

* ORANGE, YELLOW & YELLOW/GREEN

IF A SEAL IS PRESENT ON THIS SHEET IT HAS BEEN ELECTRONICALLY SEALED AND DATED.

STATE OF MISSOURI
EUGENE LOUIS KUEKER JR.
NUMBER PE-2011000912
PROFESSIONAL ENGINEER
THIS SHEET HAS BEEN SIGNED, SEALED, AND DATED ELECTRONICALLY.

DATE PREPARED 3/25/2026
ROUTE I-270 | STATE MO
DISTRICT SL | SHEET NO. 160
COUNTY ST. LOUIS
JOB NO. JSL0021
CONTRACT ID.
PROJECT NO.
BRIDGE NO.

DESCRIPTION | DATE

MISSOURI HIGHWAYS AND TRANSPORTATION COMMISSION
105 WEST CAPITOL
JEFFERSON CITY, MO 65102
1-888-ASK-MODOT (1-888-275-6636)

HDR Engineering, Inc.
1001 Highlands Plaza Drive
Suite 200
St. Louis, MO 63110-1337
314-425-8300
Certificate of Authority: 000856

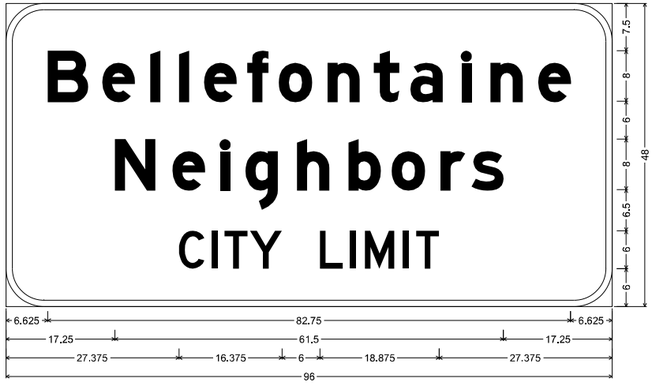

I4-1 ST-STRUCTURAL;
6.000" Radius, 1.000" Border, White on, Green;
"Bellefontaine", E Mod: "Neighbors", E Mod: "CITY LIMIT", D;
Table of letter and object lefts

B	e	l	l	e	f	o	n	t	a	l	n	e		
6.625	15.250	22.875	27.375	31.375	38.250	43.250	50.875	58.250	64.000	72.125	76.750	84.250		
N	e	i	g	h	b	o	r	s						
17.250	28.375	34.000	37.875	46.125	54.250	61.125	68.750	73.750						
C	I	T	Y	L	I	M	I	T						
27.375	32.500	34.625	38.625	49.750	54.500	56.875	62.875	65.000						

SIGN NO.	4
STATION	520+12
ROADWAY	MO 367

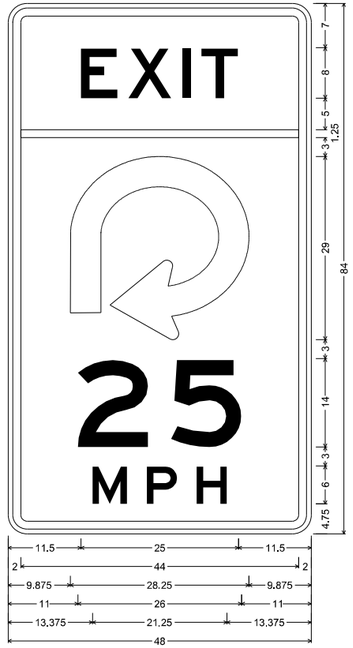

W13-6-48 (Loop Right) SHF-FLAT SHEET FLUORESCENT;
3.000" Radius, 1.250" Border, 0.750" Indent, Black on, Yellow;
"EXIT", E: "25", E: "MPH", E 200% spacing;
Table of letter and object lefts

E	X	I	T
11.500	19.000	27.625	30.625

2.000
9.875

2	5
11.000	25.750

M	P	H
13.375	22.000	29.875

SIGN NO.	6
STATION	611+50
ROADWAY	I-270

STATE OF MISSOURI
EUGENE LOUIS KUEKER JR.
NUMBER PE-2010009912
PROFESSIONAL ENGINEER

THIS SHEET HAS BEEN SIGNED, SEALED, AND DATED ELECTRONICALLY.

IF A SEAL IS PRESENT ON THIS SHEET IT HAS BEEN ELECTRONICALLY SEALED AND DATED.

DATE PREPARED
3/25/2026

ROUTE	STATE
I-270	MO
DISTRICT	SHEET NO.
SL	161

COUNTY
ST. LOUIS

JOB NO.
JSL0021

CONTRACT ID.

PROJECT NO.

BRIDGE NO.

DESCRIPTION

DATE

MISSOURI HIGHWAYS AND TRANSPORTATION COMMISSION

105 WEST CAPITOL
JEFFERSON CITY, MO 65102
1-888-ASK-MODOT (1-888-275-6636)

HDR Engineering, Inc.
1001 Highlands Plaza Drive
Suite 200
St. Louis, MO 63110-1337
314-425-8300
Certificate of Authority: 000856

SIGN NO.	5
STATION	607+54
ROADWAY	I-270

SIGN DETAILS INCLUDED FOR INFORMATION ONLY

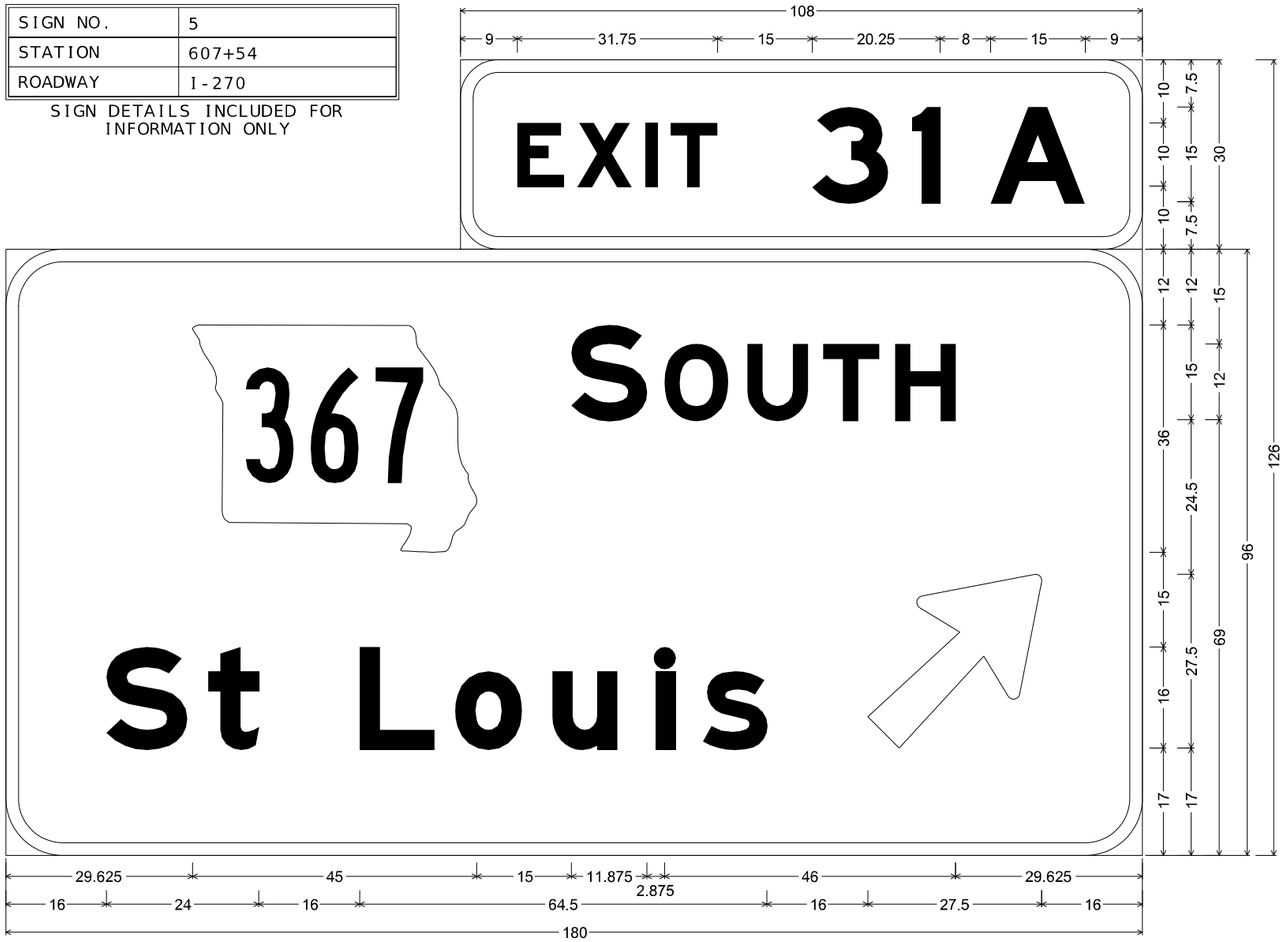

E1-5P ST-STRUCTURAL;
6.000" Radius, 2.000" Border, White on, Green;
"EXIT", E Mod; "31 A", E Mod;

E1-1 ST-STRUCTURAL;
9.000" Radius, 2.000" Border, White on, Green;
State Highway 367 M1-6a4 18.000" B; "SOUTH", E Mod; "St Louis", E Mod; Arrow 160 - 35.000" 45';
Table of letter and object lefts

E 81.000	X 90.500	I 101.250	T 105.250	3 127.750	I 143.500	A 156.000
367 29.625	S 89.625	O 104.375	U 117.375	T 129.500	H 140.875	
S 16.000	t 32.000	L 56.000	o 71.125	u 86.625	i 102.875	s 110.375	136.500

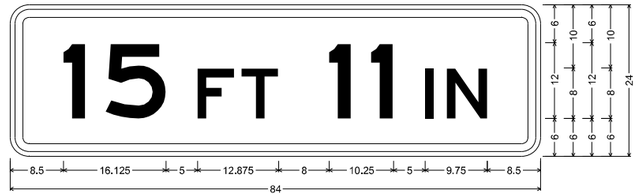

W12-2a SHF-FLAT SHEET FLUORESCENT;
3.000" Radius, 1.250" Border, 0.750" Indent, Black on, Yellow;
"15 FT 11 IN", E;
Table of letter and object lefts

1 8.500	5 15.125	F 29.625	T 36.625	1 50.500	1 57.125	I 65.750	N 69.125

SIGN NO.	10
STATION	BRIDGE
ROADWAY	I-270/BELLEFONTAINE RD

SIGN NO.	30
STATION	BRIDGE
ROADWAY	I-270/BELLEFONTAINE RD

STATE OF MISSOURI
EUGENE LOUIS KUECKER JR.
NUMBER PE-2011000912
PROFESSIONAL ENGINEER

THIS SHEET HAS BEEN SIGNED, SEALED, AND DATED ELECTRONICALLY.

DATE PREPARED 3/25/2026
ROUTE I-270 | STATE MO
DISTRICT SL | SHEET NO. 162
COUNTY ST. LOUIS
JOB NO. JSL0021
CONTRACT ID.
PROJECT NO.
BRIDGE NO.

DESCRIPTION | DATE

IF A SEAL IS PRESENT ON THIS SHEET IT HAS BEEN ELECTRONICALLY SEALED AND DATED.

MISSOURI HIGHWAYS AND TRANSPORTATION COMMISSION
105 WEST CAPITOL
JEFFERSON CITY, MO 65102
1-888-ASK-MODOT (1-888-275-6636)

HDR Engineering, Inc.
1001 Highlands Plaza Drive
Suite 200
St. Louis, MO 63110-1337
314-425-8300
Certificate of Authority: 000856

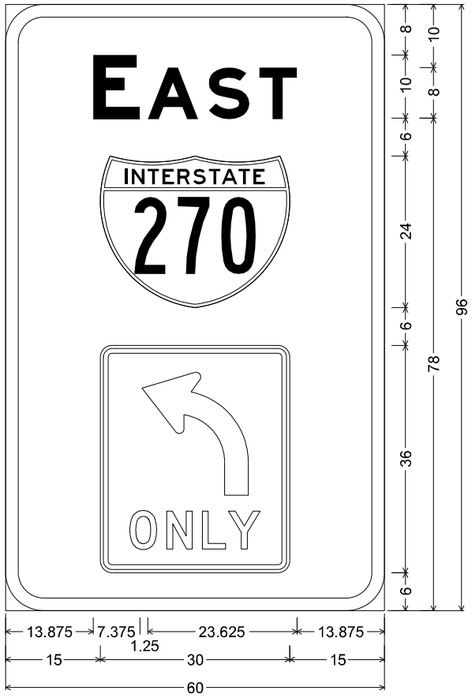

D15-1 ST-STRUCTURAL;
6.000" Radius, 2.000" Border, White on, Green;
"EAST", E Mod; Interstate 270 12.000" B;
R3-5L_Decal;
Table of letter and object lefts

E 13.875	**A** 22.500	**S** 32.125	**T** 40.250
270 15.000			
15.000			

SIGN NO.	10
STATION	BRIDGE
ROADWAY	I-270/BELLEFONTAINE RD

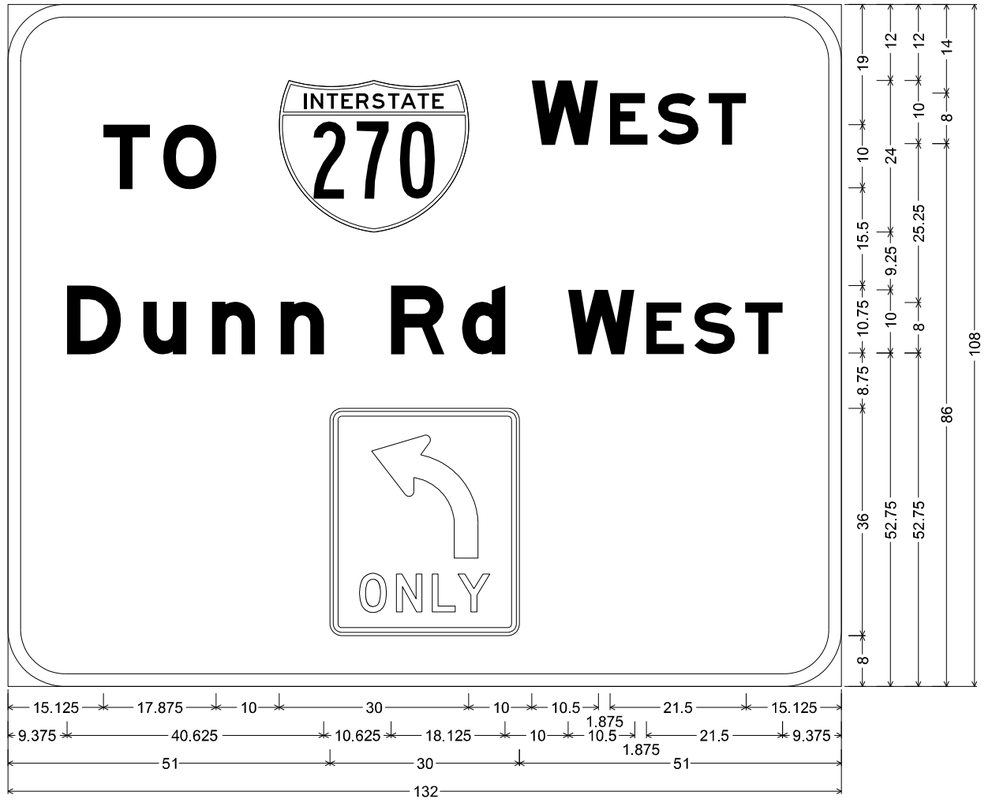

D15-1 ST-STRUCTURAL;
9.000" Radius, 2.000" Border, White on, Green;
"TO", E Mod; Interstate 270 12.000" B; "WEST", E Mod; "Dunn Rd", E Mod; "WEST", E Mod;
R3-5L_Decal;
Table of letter and object lefts

T 15.125	**O** 24.625	270 43.000	**W** 83.000	**E** 95.375	**S** 103.000	**T** 111.000
D 9.375	**u** 21.375	**n** 32.250	**n** 43.125	**R** 60.625	**d** 71.875	**W** 88.750	**E** 101.125	**S** 108.750	**T** 116.750
51.000									

SIGN NO.	11
STATION	BRIDGE
ROADWAY	I-270/BELLEFONTAINE RD

STATE OF MISSOURI
EUGENE LOUIS KUEKER JR.
NUMBER PE-2011000312
PROFESSIONAL ENGINEER
THIS SHEET HAS BEEN SIGNED, SEALED, AND DATED ELECTRONICALLY.

DATE PREPARED 3/25/2026
ROUTE I-270 | STATE MO
DISTRICT SL | SHEET NO. 163
COUNTY ST. LOUIS
JOB NO. JSL0021
CONTRACT ID.
PROJECT NO.
BRIDGE NO.

DESCRIPTION | DATE

IF A SEAL IS PRESENT ON THIS SHEET IT HAS BEEN ELECTRONICALLY SEALED AND DATED.

MISSOURI HIGHWAYS AND TRANSPORTATION COMMISSION
105 WEST CAPITOL
JEFFERSON CITY, MO 65102
1-888-ASK-MODOT (1-888-275-6636)

HDR Engineering, Inc.
1001 Highlands Plaza Drive
Suite 200
St. Louis, MO 63110-1337
314-425-8300
Certificate of Authority: 000856



E1-5P ST-STRUCTURAL;
6.000" Radius, 2.000" Border, White on, Green;
"EXIT", E Mod; "32", E Mod;

E1-1 ST-STRUCTURAL;
9.000" Radius, 2.000" Border, White on, Green;
"Bellefontaine", E Mod; "Rd", E Mod; " ", E Mod; Arrow 160 - 35.000" 45';
Table of letter and object lefts

E 155.125	**X** 164.625	**I** 175.375	**T** 179.375	**3** 201.875	**2** 216.875	

B 17.000	**e** 34.250	**l** 49.375	**l** 58.625	**e** 66.500	**f** 80.125	**o** 90.125	**n** 105.500	**t** 120.250	**a** 131.875	**i** 148.125	**n** 157.250	**e** 172.375	

R 86.250	**d** 103.125	⇗ 195.500

SIGN NO.	30
STATION	661+80
ROADWAY	I-270

STATE OF MISSOURI
EUGENE LOUIS KUEKER JR.
NUMBER PE-2011000912
PROFESSIONAL ENGINEER
THIS SHEET HAS BEEN SIGNED, SEALED, AND DATED ELECTRONICALLY.

IF A SEAL IS PRESENT ON THIS SHEET IT HAS BEEN ELECTRONICALLY SEALED AND DATED.

DATE PREPARED: 3/25/2026
ROUTE: I-270 | STATE: MO
DISTRICT: SL | SHEET NO.: 164
COUNTY: ST. LOUIS
JOB NO.: JSL0021
CONTRACT ID.:
PROJECT NO.:
BRIDGE NO.:

DESCRIPTION	DATE

MISSOURI HIGHWAYS AND TRANSPORTATION COMMISSION
105 WEST CAPITOL
JEFFERSON CITY, MO 65102
1-888-ASK-MODOT (1-888-275-6636)

HDR Engineering, Inc.
1001 Highlands Plaza Drive
Suite 200
St. Louis, MO 63110-1337
314-425-8300
Certificate of Authority: 000856

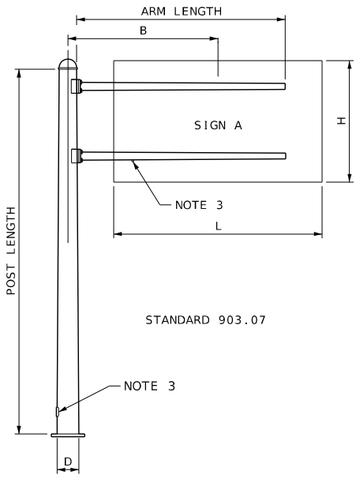

STANDARD 903.07

TWO TUBE - TYPE C

TUBULAR STEEL SUPPORT NUMBERING SYSTEM

THE FIRST SYMBOL (LETTER) INDICATES TYPE AS, C FOR CANTILEVER, B FOR BUTTERFLY, S FOR SPAN TYPE.

THE SECOND SYMBOL (NUMBER) INDICATES SINGLE (1) OR DOUBLE (2) MAST ARMS OR TRUSS.

THE THIRD SYMBOL (NUMBER) INDICATES GAGE - POST
7 = 7 GAUGE (.1793") 77 = 7 + 7 GAUGE (.3586")
3 = 3 GAUGE (.2500") 33 = 3 + 3 GAUGE (.5000")
0 = 0 GAUGE (.3125") 00 = 0 + 0 GAUGE (.6250")

THE FOURTH SYMBOL (NUMBER) INDICATES DIAMETER IN INCHES OF THE POST BASE.

THE FIFTH SYMBOL (NUMBER) INDICATES LENGTH IN FEET OF ARM OR SPAN.

EXAMPLE: DESIGN NUMBER B-20018-24 INDICATES BUTTERFLY TYPE, TWO ARMS, 2-PLY, O-GAUGE, 18" DIAMETER AT BASE OF POST & 24' MAST ARMS.

NOTES

1. ALL POSTS, BEAMS, MAST ARMS, ANGLES, BRACKETS & ETC. SHALL BE HOT DIP GALVANIZED AFTER FABRICATION.
2. SHOP DRAWINGS ARE NOT REQUIRED.
3. HANDHOLES AND 1¼" BLIND HALF COUPLINGS REQUIRED ON DESIGNATED POSTS. HANDHOLES SHALL BE PLACED ON RIGHT HAND SHOULDER SIDE OF TRUSSES.
4. STRUCTURES DESIGNED FOR TOTAL SIGN AREA COMMENSURATE WITH HEIGHT OF SIGN AND REQUIRED VERTICAL CEARANCE.
5. DESIGN SPECIFICATIONS: AASHTO STANDARD SPECIFICATIONS FOR STRUCTURAL SUPPORTS FOR HIGHWAY SIGNS, LUMINAIRES, AND TRAFFIC SIGNALS - 1985.

TUBULAR STEEL SUPPORT DESIGN DATA STANDARDS 903.05 THRU 903.08

SIGN NUMBER	STATION	LOCATION	STANDARD NUMBER	TYPE	SPAN OR ARM	B LENGTH	POST LENGTH NO. 1	POST LENGTH NO. 2	CONCRETE FOOTINGS	SIGN DATA: SPREAD	SIGN A L	SIGN A H	SPACE	SIGN B L	SIGN B H	SPACE	SIGN C L	SIGN C H	SPACE	SIGN D L	SIGN D H	SPACE	SIGN E L	SIGN E H	SPACE	TOTAL
					FT-IN.	FT-IN.	FT	FT	CU YDS	FT-IN.	FT-IN.	FT-IN.	FT-IN.	FT-IN.	FT-IN.	FT-IN.	FT-IN.	FT-IN.	FT-IN.	FT-IN.	FT-IN.	FT-IN.	FT-IN.	FT-IN.	FT-IN.	SQ FT
5	607+54.00	WB I-270	903.07	C	28'-0"	23'-6"	24'		4.90		9'-0"	2'-6"	0'-0"	15'-0"	8'-0"											142.5
30	661+80.00	WB I-270	903.07	C	28'-0"	23'-6"	23'		5.23		8'-0"	2'-6"	0'-0"	20'-0"	6'-0"											140.0

STATE OF MISSOURI
EUGENE LOUIS KUEKKER JR.
NUMBER PE-2011000912
PROFESSIONAL ENGINEER
THIS SHEET HAS BEEN SIGNED, SEALED, AND DATED ELECTRONICALLY.

DATE PREPARED 3/25/2026

ROUTE	STATE
I-270	MO
DISTRICT	SHEET NO.
SL	165

COUNTY ST. LOUIS

JOB NO. JSL0021

CONTRACT ID.

PROJECT NO.

BRIDGE NO.

DESCRIPTION | DATE

IF A SEAL IS PRESENT ON THIS SHEET IT HAS BEEN ELECTRONICALLY SEALED AND DATED.

MISSOURI HIGHWAYS AND TRANSPORTATION COMMISSION
105 WEST CAPITOL
JEFFERSON CITY, MO 65102
1-888-ASK-MODOT (1-888-275-6636)

HDR Engineering, Inc.
1001 Highlands Plaza Drive
Suite 200
St. Louis, MO 63110-1337
314-425-8300
Certificate of Authority: 000856

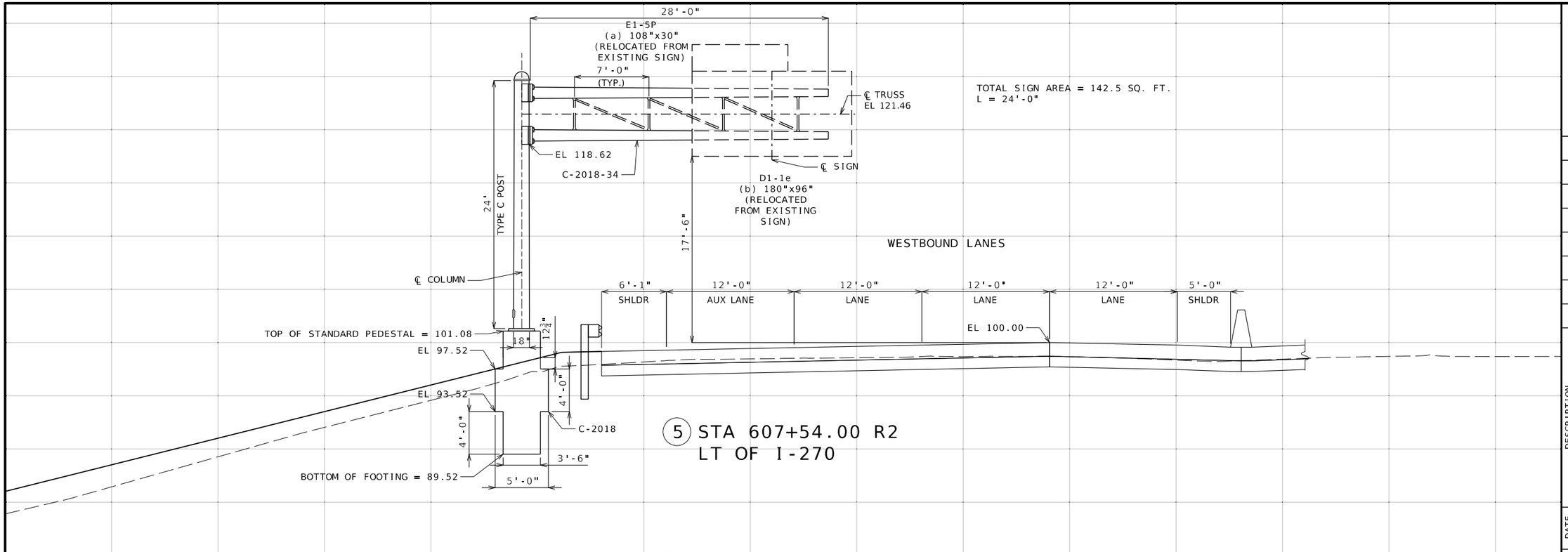

STRUCTURAL SIGN &
OVERHEAD SIGN TRUSS
CROSS SECTIONS
SHEET 1 OF 1

STATE OF MISSOURI
EUGENE LOUIS KUEVER JR.
NUMBER PE-2011009912
PROFESSIONAL ENGINEER

THIS SHEET HAS BEEN SIGNED, SEALED, AND DATED ELECTRONICALLY.

IF A SEAL IS PRESENT ON THIS SHEET IT HAS BEEN ELECTRONICALLY SEALED AND DATED.

DATE PREPARED	3/25/2026
ROUTE	STATE
I-270	MO
DISTRICT	SHEET NO.
SL	166
COUNTY	ST. LOUIS
JOB NO.	JSL0021
CONTRACT ID.	
PROJECT NO.	
BRIDGE NO.	

DESCRIPTION

DATE

MISSOURI HIGHWAYS AND TRANSPORTATION COMMISSION
105 WEST CAPITOL
JEFFERSON CITY, MO 65102
1-888-ASK-MODOT (1-888-275-6636)

HDR Engineering, Inc.
1001 Highlands Plaza Drive
Suite 200
St. Louis, MO 63110-1337
314-425-8300
Certificate of Authority: 000856

c:\pwworking\central01\d4324513\166_SN11_JSL0021_I5_I-270.dgn 3:30:47 PM 3/25/2026

SIGNAL LEGEND

- EX. CONDUIT
- EX. PEDESTRIAN SIGNAL HEAD
- EX. TRAFFIC SIGNAL HEAD
- EXISTING SIGNAL POLE MOUNTED LUMINAIRE
- EX. PUSHBUTTON DETECTOR (PB)
- EX. POWER SUPPLY
- EX. PULL BOX
- EX. POST & MAST ARM
- EX. CONTROLLER CABINET AND BASE
- EX. VIDEO DETECTION CAMERA
- EX. PREMPTION DETECTOR
- EX. DETECTION ZONE
- EX. PULL BOX IDENTIFIER
- EX. SIGNAL POLE IDENTIFIER
- EX. SIGNAL/PED. HEAD IDENTIFIER
- EX. PED. PUSHBUTTON IDENTIFIER

SCALE
0 20 40 60

10

665

660

EXISTING R/W

REMOVE EXISTING SIGNAL POLE AND ARM
REMOVE EXISTING SIGNAL HEADS
REMOVE EXISTING VIDEO DETECTOR
FOUNDATION TO BE REMOVED 2' BELOW GRADE

REMOVE EXISTING METER CABINET POWER SUPPLY

REMOVE EXISTING SIGNAL CABINETS
REMOVE FOUNDATION

REMOVE EXISTING SIGNAL PULL BOX

REMOVE EXISTING SIGNAL PULL BOX

REMOVE EXISTING PED PEDESTAL POLE
REMOVE EXISTING PED HEAD AND PED BUTTON
REMOVE EXISTING FOUNDATION

DUNN RD

℄ EXIST. DUNN RD

BELLEFONTAINE RD

REMOVE EXISTING SIGNAL PULL BOX

REMOVE EXISTING SIGNAL POLE AND ARM
REMOVE EXISTING SIGNAL HEADS
REMOVE EXISTING PED HEAD AND PED BUTTON
REMOVE EXISTING VIDEO DETECTOR
FOUNDATION TO BE REMOVED 2' BELOW GRADE

STA 662+76.8 ℄ EXIST. DUNN RD =
STA 11+72.72 ℄ EXIST. BELLEFONTAINE RD

℄ EXIST.
BELLEFONTAINE RD

EXISTING SIGNAL PLAN
DUNN RD AND
BELLEFONTAINE RD
SHEET 1 OF 7

STATE OF MISSOURI
JASON LEE HAYNES
NUMBER PE-2004017183
PROFESSIONAL ENGINEER
THIS SHEET HAS BEEN SIGNED, SEALED, AND DATED ELECTRONICALLY

DATE PREPARED 3/25/2026
ROUTE I-270 | STATE MO
DISTRICT SL | SHEET NO. 167
COUNTY ST. LOUIS
JOB NO. JSL0021
CONTRACT ID.
PROJECT NO.
BRIDGE NO.

DESCRIPTION | DATE

IF A SEAL IS PRESENT ON THIS SHEET IT HAS BEEN ELECTRONICALLY SEALED AND DATED.

MISSOURI HIGHWAYS AND TRANSPORTATION COMMISSION

105 WEST CAPITOL
JEFFERSON CITY, MO 65102
1-888-ASK-MODOT (1-888-275-6636)

HDR Engineering, Inc.
1001 Highlands Plaza Drive
Suite 200
St. Louis, MO 63110-1337
314-425-8300
Certificate of Authority: 000856

c:\pwworking\central01\d4324513\164_SG01_JSL0021_I20_Dunn_Rd.dgn 2:54:40 PM 3/25/2026

SIGNAL HEAD LEGEND

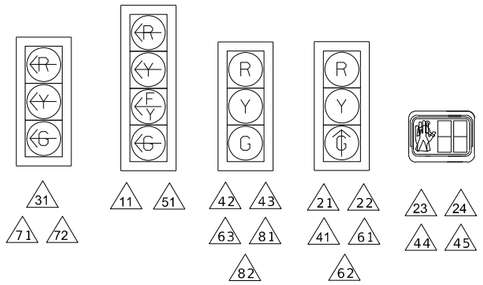

TRAFFIC SIGNAL LEGEND

- CONTROLLER WITH PAD
- POWER SUPPLY
- P.S. POWER SOURCE
- SIGNAL HEAD (PEDESTRIAN)
- SIGNAL HEAD (STANDARD)
- VIDEO DETECTOR
- PUSH BUTTON DETECTOR
- STANDARD CONCRETE PULL BOX
- DOUBLE CONCRETE PULL BOX TYPE A, TYPE 1 DRAIN
- PREFORMED CLASS A PULL BOX
- CONDUIT PUSHED
- CONDUIT IN TRENCH
- MAST ARM WITH SIGNAL HEADS
- TYPE A BASE
- TYPE F BASE
- TYPE C BASE
- CCTV CAMERA
- DETECTION ZONE

SIGN LEGEND

R10-27a

R10-3eL

R10-3eR

SIGN A

SIGN B

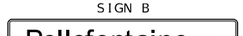

SCALE

0 20 40 60

PROPOSED SIGNAL PLAN
DUNN RD AND
BELLEFONTAINE RD
SHEET 2 OF 7

HDR Engineering, Inc.
1001 Highlands Plaza Drive
Suite 200
St. Louis, MO 63110-1337
314-425-8300
Certificate of Authority: 000856

MISSOURI HIGHWAYS AND TRANSPORTATION COMMISSION
105 WEST CAPITOL
JEFFERSON CITY, MO 65102
1-888-ASK-MODOT (1-888-275-6636)

STATE OF MISSOURI
JASON LEE HAYNES
NUMBER PE-2004017183
PROFESSIONAL ENGINEER
THIS SHEET HAS BEEN SIGNED, SEALED, AND DATED ELECTRONICALLY

IF A SEAL IS PRESENT ON THIS SHEET IT HAS BEEN ELECTRONICALLY SEALED AND DATED.

DATE PREPARED	
3/25/2026	
ROUTE	STATE
I-270	MO
DISTRICT	SHEET NO.
SL	168
COUNTY	
ST. LOUIS	
JOB NO.	
JSL0021	
CONTRACT ID.	
PROJECT NO.	
BRIDGE NO.	

DESCRIPTION	DATE

EFFECTIVE: 07-01-2018

| POST NUMBER | PULL BOX NUMBER | LOCATION APPROACH | STATION | OFFSET | BASE A 9 | A 9.5 | A 10 | A 10.5 | A 11 | A 12 | F 9 | F 9.5 | F 10 | F 10.5 | F 11 | F 12 | C | CONCRETE** (CU. YDS.) | PULL BOX PREFORMED CLASS 1 | CLASS 2 | CLASS 3 | CLASS 5 | CONCRETE STANDARD | CONCRETE DOUBLE, TYPE A | CONCRETE DOUBLE, TYPE B | DRAIN TYPE* I | DRAIN TYPE* II A | II B | II C | POST TOP MOUNT POST 8 FT. | TOP MOUNT POST 15 FT. | TYPE C & CL ARM LENGTH A | A | A | A | SIGNAL SPACING B | C | D | D' | SIGN SPACING B | C | D | D' | TYPE B & BL ARM LENGTH E | K | E | K | E | K | LEFT ARM E SIGNAL SPACING F | G | H | H' | SIGN SPACING F | G | H | H' | RIGHT ARM K SIGNAL SPACING L | M | N | N' | SIGN SPACING L | M | N | N' | INCLUDED ANGLE | LUMINAIRE BRACKET ARM* 4 FT. | 6 FT. | 8 FT. | 10 FT. | 12 FT. | 15 FT. |
|---|---|---

EFFECTIVE: 10-01-2015

CONDUIT (WITH #14 TRACER WIRE)

FROM	TO	CENTER TO CENTER DISTANCE	LOOP DET.	TRENCH				PUSHED			MEDIAN			ON STRUCTURE			REMARKS
			1"	2"	3"	4"		2"	3"	4"	2"	3"	4"	2"	3"		
P.S.	∅	124		128													
∅	⊠	35		43													
⊠	1	11				28											2 RUNS
1	1	45			48												
1	2	24			25												
1	2	71								69							
2	3	5			8												
1	4	107								210							2 RUNS
4	6	11			12												
4	7	5			6												
4	5	52								50							
4	8	5			8												
4	3	65								63							
3	4	7			10												
3	5	11			12												
SUBTOTALS				171	129	28				392							
TOTALS				171	129	28				392							

CABLE

FROM	TO	CENTER TO CENTER DISTANCE	POWER		CONTROL				CLOSED LOOP INTERCONNECT	LUMINAIRE		VIDEO DETECTOR CABLE	CCTV CAMERA	FIBER		REMARKS
				1c #2	2c #16	5c #16	7c #16	3c #16	3 PAIR #16	CONTROL 2c #12	POLE & BRACKET 1c #10		CAT5E	SINGLE-MODE	MULTI-MODE	
P.S.	∅	124		*501												*FOR INFORMATION ONLY.
∅	⊠	35		153												
⊠	1	11			88	88	242					88				
1	1	45					96					48				
1	11	73					73									
1	63	34					34									
63	62	12					12									
62	61	12					12									
1												66				
1	2	24			27	27										
2	45					10										
2	44				9											
1	2	71					231					77				
2	3	5					24					8				
3	31	46					46									
3	81	34					34									
3	82	13					13									
3												38				
1	4	107			339	339	678					226				
4	6	11			14	14										
6	24					10										
6	23				9											
4	7	5			8	8										
7	44					10										
7	45				9											
4	5	52					174					58				
5	8	5					24					8				
8	72	60					60									
8	42	38					38									
42	41	10					10									
8	43	13					13									
8												44				
4	3	65			71	71	213					71				
3	4	7					30					10				
4	51	71					71									
4	22	51					51									
22	21	10					10									
4	71	13					13									
4												49				
3	5	11			14	14										
5	23					10										
5	24				9											
SUBTOTALS				153	597	601	2202					791				
TOTALS				170	630	640	2320					840				

WIRE TOTALS INCLUDES 5% FOR SNAKING AND CUTTING

INTERSECTION DUNN RD AND BELLEFONTAINE RD

D-37B

STATE OF MISSOURI
JASON LEE HAYNES
NUMBER PE-2004017183
PROFESSIONAL ENGINEER

THIS SHEET HAS BEEN SIGNED, SEALED, AND DATED ELECTRONICALLY

DATE PREPARED 3/25/2026

ROUTE I-270 | STATE MO

DISTRICT SL | SHEET NO. 170

COUNTY ST. LOUIS

JOB NO. JSL0021

CONTRACT ID.

PROJECT NO.

BRIDGE NO.

DESCRIPTION | DATE

MISSOURI HIGHWAYS AND TRANSPORTATION COMMISSION

105 WEST CAPITOL
JEFFERSON CITY, MO 65102
1-888-ASK-MODOT (1-888-275-6636)

HDR Engineering, Inc.
1001 Highlands Plaza Drive
Suite 200
St. Louis, MO 63110-1337
314-425-8300
Certificate of Authority: 000856

IF A SEAL IS PRESENT ON THIS SHEET IT HAS BEEN ELECTRONICALLY SEALED AND DATED.

EFFECTIVE: 04-01-2018

POWER SUPPLY

LOCATION			POWER SUPPLY ASSEMBLY		CIRCUIT BREAKER TRIP RATING*				LIGHTING CONTROL * (ON POWER SUPPLY)		SERVICE POLE	
					CONTROLLER		POWER SUPPLY DISCONNECT					
							MAIN BREAKER					
APPROACH	STATION	OFFSET	DRAWING 902.15	DRAWING	AUXILIARY BREAKER	CONT & SIGNAL LAMPS	SIGNALS	LIGHTING	120 VOLT CONTROL CABINET	MAIN BREAKER	CONTRACT FURNISH	UTILITY COMPANY
BELLEFONTAINE	11+13	70'LT	Type 2		15 Amps	40 Amps	40 Amps	Amps		Amps	CI. Ft.	
			Type		15 Amps	Amps	Amps	Amps		Amps	CI. Ft.	

CONTROLLER ASSEMBLY AND AUXILIARY EQUIPMENT

LOCATION			SYSTEM MASTER (CLOSED LOOP)		ACTUATED		ON-OFF* SWITCH TYPE		COORDINATION INTERFACE *					TIME * CLOCK	NEMA CABINET TYPE *			170 CABINET TYPE *		170 SOFTWARE *	
									12C/7C HARDWIRE (1)		TIME BASE	CLOSED LOOP		FIBER							
APPROACH	STATION	OFFSET	NEMA	170	NEMA	170	I	II	MASTER	LOCAL		NEMA	170			E	EV	DOUBLE	332	336S	BITRAN	WAPITI
BELLEFONTAINE	11+44	84'LT			1		1									1						

NEMA DETECTOR ASSIGNMENT

		CARD POSITION							
		1	2	3	4	5	6	7	8
CHANNEL	1	11	21 22	31	41 42				
	2	51	61 62 63	71	81				

NOTE: LAND 2C DETECTOR WIRES ON DETECTOR PANEL IN CABINET
TOTAL NUMBER OF DETECTOR CARDS(2-CHANNEL) = 4 (2)

DETECTOR SCHEDULE

DETECTOR NUMBER	APPROACH	TYPE				
		PUSH BUTTON	INDUCTION LOOP (2)			SL DETECTION(3)
			STANDARD	DELAY/ EXTEND *	CALL UNIT *	
23	WEST CROSSWALK	1				
24	WEST CROSSWALK	1				
44	NORTH CROSSWALK	1				
45	NORTH CROSSWALK	1				
21	BELLEFONTAINE SB					6'X30' ZONE
22	BELLEFONTAINE SB					6'X30' ZONE
51	BELLEFONTAINE SB					6'X30' ZONE
41	DUNN WB					6'X30' ZONE
42	DUNN WB					6'X30' ZONE
71	DUNN WB					6'X30' ZONE
11	BELLEFONTAINE NB					6'X30' ZONE
61	BELLEFONTAINE NB					6'X30' ZONE
62	BELLEFONTAINE NB					6'X30' ZONE
63	BELLEFONTAINE NB					6'X30' ZONE
31	DUNN EB					6'X30' ZONE
81	DUNN EB					6'X30' ZONE
TOTAL		4				

* ITEMS FOR WHICH SEPARATE PAYMENT WILL NOT BE MADE.

*** USE D3-1 FOR ONE LINE. USE D3-1B FOR TWO LINE.

(1) MoDOT "D" PLUG SHALL BE WIRED INTO ALL NEMA CONTROLLERS WITH 7C HARDWIRE INTERCONNECT.

(2) PAYMENT IS MADE FOR THE NUMBER OF 2-CHANNEL DETECTOR CARDS AS SHOWN BELOW THE ASSIGNMENT CHART.

(3) VIDEO DETECTORS ARE DEFINED IN JSP AS SL DISTRICT TRAFFIC SIGNAL DETECTION SYSTEM

SIGNAL SIGNS

QUANTITY	MUTCD SIGN NUMBER	SIZE	AREA	SIGN TOTAL AREA ITEM NO. 90208.33	SIGNAL SIGN MOUNTING HARDWARE ITEM NO. 90208.34
		INCHES	SQ.FT.	SQ.FT.	EA.
	R10-10L	24 X 30	5.0		
	R10-10R	24 X 30	5.0		
	R3-5L	30 X 36	7.5		
	R3-5R	30 X 36	7.5		
	R3-5A	30 X 36	7.5		
	R3-6L	30 X 36	7.5		
	R3-6R	30 X 36	7.5		
	R3-2	24 X 24	4.0		
	R3-1	24 X 24	4.0		
	R3-3	24 X 24	4.0		
4	R10-3E	9 X 15	0.9	3.6	**
	R10-11A	24 X 30	5.0		
	R10-13	36 X 24	6.0		
1	R10-27A	30 X 36	7.5	7.5	1
2	D3-1 ***	72 X 18	9.0	18.0	4
2	D3-1 ***	48 X 18	6.0	12.0	4
			SUBTOTAL	41.1	9
			TOTAL	42	9

**PUSHBUTTON SIGNS & MOUNTING HARDWARE INCLUDED IN 9024920 BID ITEM FOR PUSHBUTTONS

NEMA LOAD SWITCH ASSIGNMENTS

1	2	3	4	5	6	7	8	9	10	11	12	13	14	15	16
∅1 NBL	∅2 SBT	∅3 EBL	∅4 WBT	∅5 SBL	∅6 NBT	∅7 WBL	∅8 EBT	OLA NBL		OLC SBL		∅2 PED	∅4 PED		

TOTAL NUMBER OF LOAD SWITCHES = 12

DUNN RD AND BELLEFONTAINE RD
INTERSECTION

D-37C

STATE OF MISSOURI
JASON LEE HAYNES
NUMBER PE-2004017183
PROFESSIONAL ENGINEER
THIS SHEET HAS BEEN SIGNED, SEALED, AND DATED ELECTRONICALLY

DATE PREPARED 3/25/2026
ROUTE I-270 | STATE MO
DISTRICT SL | SHEET NO. 171
COUNTY ST. LOUIS
JOB NO. JSL0021
CONTRACT ID.
PROJECT NO.
BRIDGE NO.

DESCRIPTION | DATE

MISSOURI HIGHWAYS AND TRANSPORTATION COMMISSION
105 WEST CAPITOL
JEFFERSON CITY, MO 65102
1-888-ASK-MODOT (1-888-275-6636)

HDR Engineering, Inc.
1001 Highlands Plaza Drive
Suite 200
St. Louis, MO 63110-1337
314-425-8300
Certificate of Authority: 000856

IF A SEAL IS PRESENT ON THIS SHEET IT HAS BEEN ELECTRONICALLY SEALED AND DATED.

EFFECTIVE: 12-01-2017

WIRING DIAGRAM

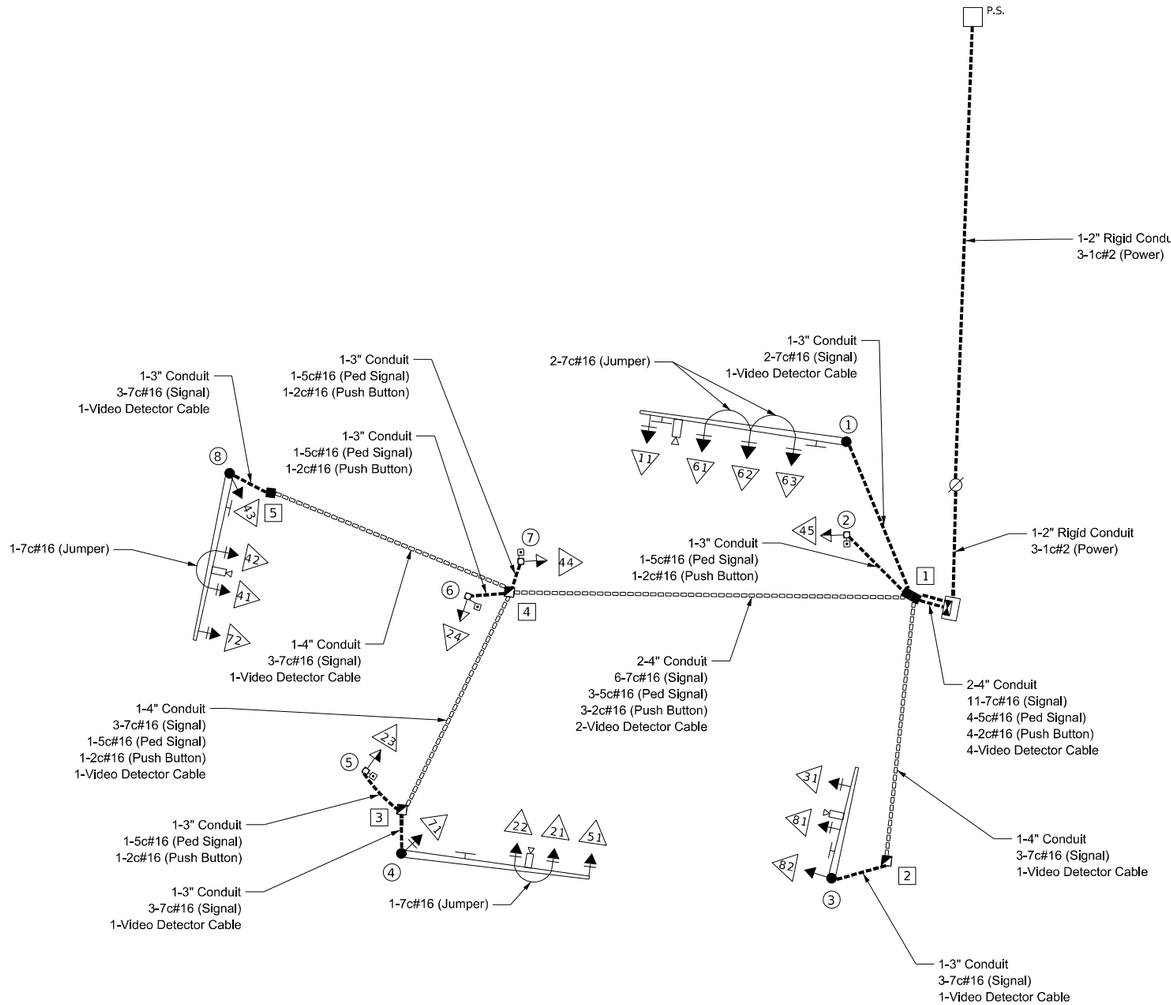

NOT TO SCALE

LEGEND

3"	CONDUIT CONTAINING CABLE WITH SIZE
	CABLE
X-Xc	MULTI-CONDUCTOR CABLE #16 AWG (UNLESS OTHERWISE INDICATED)
LIC	#14 AWG DETECTOR LEAD-IN CABLE (2C TWISTED SHIELDED)
X	PULL BOX WITH NUMBER
X	POST WITH NUMBER
X	POST WITH MAST ARM
X	POST WITH MAST ARM AND LUMINAIRE
X	DETECTOR WITH NUMBER
X	SIGNAL HEAD WITH NUMBER
	SIGNAL CONTROLLER
	POWER SUPPLY
	LIGHTING CONTROLLER

DUNN RD AND BELLEFONTAINE RD

INTERSECTION

D-37D

STATE OF MISSOURI
JASON LEE HAYNES
NUMBER PE-2004017183
PROFESSIONAL ENGINEER

THIS SHEET HAS BEEN SIGNED, SEALED, AND DATED ELECTRONICALLY

IF A SEAL IS PRESENT ON THIS SHEET IT HAS BEEN ELECTRONICALLY SEALED AND DATED.

DATE PREPARED: 3/25/2026

ROUTE	STATE
I-270	MO
DISTRICT	SHEET NO.
SL	172

COUNTY: ST. LOUIS

JOB NO.: JSL0021

CONTRACT ID.:

PROJECT NO.:

BRIDGE NO.:

DATE	DESCRIPTION

MISSOURI HIGHWAYS AND TRANSPORTATION COMMISSION
105 WEST CAPITOL
JEFFERSON CITY, MO 65102
1-888-ASK-MODOT (1-888-275-6636)

HDR Engineering, Inc.
1001 Highlands Plaza Drive
Suite 200
St. Louis, MO 63110-1337
314-425-8300
Certificate of Authority: 000856

c:\pwworking\central01\d4324513\172_SG06_JSL0021_I20_D-37D.dgn 1:56:09 PM 3/25/2026

EFFECTIVE: 12-01-2017

TRAFFIC PHASING AND COLOR SEQUENCE - ACTUATED CONTROLLERS

		PHASE 1	PHASE 2	PHASE 3	PHASE 4	PHASE 5	PHASE 6	PHASE 7	PHASE 8	PED Ø2 OVERLAP	PED Ø4 OVERLAP	PED Ø6 OVERLAP	PED Ø8 OVERLAP	OVERLAP A	OVERLAP C	
FACE NUMBERS		11	21 22	31	41 42 43	51	61 63 62	71 72	81 82	23 24	44 45			11	51	FACE NUMBERS
SIGNAL INDICATIONS	R		R	RL	R R		R R	RL	R	DW DW	DW DW			RL	RL	R
	Y		Y	YL	Y Y		Y Y	YL	Y					YL	YL	Y
	FYA									FDW FDW	FDW FDW			FYL	FYL	FYA
	G		S		S G		S G		G	W W	W W					G
	L			L		L		L								
DETECTOR ASSIGNMENTS																DETECTOR ASSIGNMENTS
DETECTOR ASSIGNMENTS (PEDS. ONLY)																
OVERLAP PARENT PHASES														2	6	

PHASE 1	PHASE 2	PHASE 3	PHASE 4
	OLC		
	OLA		
PHASE 5	PHASE 6	PHASE 7	PHASE 8

RING 1

RING 2

BARRIER

RING STRUCTURE

SIGNAL FACE LOCATION

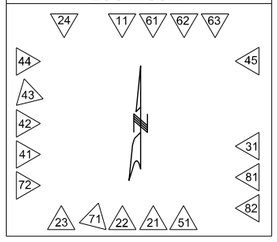

RING AND BARRIER DIAGRAM

1	2	3	4
5	6	7	8

BARRIER

IF CALLED, ALL NON-CONFLICTING PHASES SHALL COMBINE AND TIME CONCURRENTLY. TIME TO BE DETERMINED BY THE ENGINEER AT SIGNAL TURN ON AND SET IN THE CONTROLLER BY THE CONTRACTOR.

LEGEND

- ACTUATED VEHICULAR MOVEMENT
- PARTIALLY RESTRICTED ACTUATED VEHICULAR MOVEMENT
- NON-ACTUATED VEHICULAR MOVEMENT
- PARTIALLY RESTRICTED NON-ACTUATED VEHICULAR MOVEMENT
- ACTUATED PEDESTRIAN MOVEMENT
- NON-ACTUATED PEDESTRIAN MOVEMENT
- VEHICLE STOPPED

FDW — FLASHING DON'T WALK
W — WALK
DW — DON'T WALK
R/W — RIGHT OF WAY INTERVAL
YRt — YELLOW RIGHT ARROW
RT. — GREEN RIGHT ARROW
LY -YL — YELLOW LEFT ARROW
L — GREEN LEFT ARROW
S — GREEN STRAIGHT AHEAD ARROW
G — CIRCULAR GREEN
Y — CIRCULAR YELLOW
R — CIRCULAR RED
RL — RED LEFT ARROW
Ø — TRAFFIC PHASE
AO — ALL OTHERS
FR — FLASHING RED
FY — FLASHING CIRCULAR YELLOW
FYL — FLASHING YELLOW LEFT ARROW

FLASHING OPERATION	
ALL	FR

CONTROLLER TYPE	NEMA

TRAFFIC SIGNAL CONTROL OPERATION

INTERSECTION OF

DUNN RD WITH BELLEFONTAINE RD

D-38A

STATE OF MISSOURI
JASON LEE HAYNES
NUMBER PE-2004017183
PROFESSIONAL ENGINEER

THIS SHEET HAS BEEN SIGNED, SEALED, AND DATED ELECTRONICALLY

DATE PREPARED 3/25/2026

ROUTE	STATE
I-270	MO
DISTRICT	SHEET NO.
SL	173

COUNTY: ST. LOUIS

JOB NO.: JSL0021

CONTRACT ID.:

PROJECT NO.:

BRIDGE NO.:

DESCRIPTION

DATE

IF A SEAL IS PRESENT ON THIS SHEET IT HAS BEEN ELECTRONICALLY SEALED AND DATED.

MISSOURI HIGHWAYS AND TRANSPORTATION COMMISSION

105 WEST CAPITOL
JEFFERSON CITY, MO 65102
1-888-ASK-MODOT (1-888-275-6636)

HDR Engineering, Inc.
1001 Highlands Plaza Drive
Suite 200
St. Louis, MO 63110-1337
314-425-8300
Certificate of Authority: 000856

SIGNAL LEGEND

- EX. CONDUIT
- EX. PEDESTRIAN SIGNAL HEAD
- EX. TRAFFIC SIGNAL HEAD
- EXISTING SIGNAL POLE MOUNTED LUMINAIRE
- EX. PUSHBUTTON DETECTOR (PB)
- EX. POWER SUPPLY
- EX. PULL BOX
- EX. POST & MAST ARM
- EX. CONTROLLER CABINET AND BASE
- EX. VIDEO DETECTION CAMERA
- EX. PREMPTION DETECTOR
- EX. DETECTION ZONE
- EX. PULL BOX IDENTIFIER
- EX. SIGNAL POLE IDENTIFIER
- EX. SIGNAL/PED. HEAD IDENTIFIER
- EX. PED. PUSHBUTTON IDENTIFIER
- EX. CCTV CAMERA

STA 17+98.89 ℄ EXIST. RAMP 2 =
STA 14+79.56 ℄ EXIST. BELLEFONTAINE RD

REMOVE EXISTING SIGNAL PULLBOX

REMOVE EXISTING PED PEDESTAL
REMOVE EXISTING PED HEAD AND PED BUTTON
REMOVE EXISTING FOUNDATION

℄ EXIST.
RAMP 2

REMOVE EXISTING PED PEDESTAL
REMOVE EXISTING PED HEAD AND PED BUTTON
REMOVE EXISTING FOUNDATION

REMOVE EXISTING SIGNAL PULLBOX

REMOVE EXISTING SIGNAL PULLBOX

REMOVE EXISTING SIGNAL POLE AND ARM
REMOVE EXISTING SIGNAL HEADS
REMOVE EXISTING VIDEO DETECTOR
FOUNDATION TO BE REMOVED 2' BELOW GRADE

REMOVE EXISTING SIGNAL POLE AND ARM
REMOVE EXISTING SIGNAL HEADS
REMOVE EXISTING VIDEO DETECTOR
FOUNDATION TO BE REMOVED 2' BELOW GRADE

REMOVE EXISTING SIGNAL PULLBOX

℄ EXIST.
RAMP 4

REMOVE EXISTING SIGNAL POLE AND ARM
REMOVE EXISTING SIGNAL HEADS
REMOVE EXISTING VIDEO DETECTOR
FOUNDATION TO BE REMOVED 2' BELOW GRADE

REMOVE EXISTING SIGNAL PULLBOX

REMOVE EXISTING SIGNAL CABINET
REMOVE FOUNDATION

STA 0+00.00 ℄ EXIST. RAMP 4 =
STA 14+79.56 ℄ EXIST. BELLEFONTAINE RD

UTILIZE IN PLACE -
EXISTING DUAL SIGNAL/LIGHTING
METER PEDESTAL

(UIP)

S07°21'58"W

℄ EXIST.
BELLEFONTAINE RD

EXISTING R/W

EXISTING R/W

SCALE
0 20 40 60

(2007)

EXISTING SIGNAL PLAN
I-270 EB RAMPS AND BELLEFONTAINE RD
SHEET 1 OF 7

STATE OF MISSOURI
JASON LEE HAYNES
NUMBER PE-2004017183
PROFESSIONAL ENGINEER
THIS SHEET HAS BEEN SIGNED, SEALED, AND DATED ELECTRONICALLY

IF A SEAL IS PRESENT ON THIS SHEET IT HAS BEEN ELECTRONICALLY SEALED AND DATED.

DATE PREPARED: 3/25/2026
ROUTE: I-270 | STATE: MO
DISTRICT: SL | SHEET NO.: 174
COUNTY: ST. LOUIS
JOB NO.: JSL0021
CONTRACT ID.:
PROJECT NO.:
BRIDGE NO.:

DESCRIPTION	DATE

MISSOURI HIGHWAYS AND TRANSPORTATION COMMISSION
105 WEST CAPITOL
JEFFERSON CITY, MO 65102
1-888-ASK-MODOT (1-888-275-6636)

HDR Engineering, Inc.
1001 Highlands Plaza Drive
Suite 200
St. Louis, MO 63110-1337
314-425-8300
Certificate of Authority: 000856

SIGN LEGEND



R10-27a

R10-3eL

R10-3eR

SIGN A





R3-1



R3-2

TRAFFIC SIGNAL LEGEND

- CONTROLLER WITH PAD
- POWER SUPPLY
- P.S. POWER SOURCE
- SIGNAL HEAD (PEDESTRIAN)
- SIGNAL HEAD (STANDARD)
- VIDEO DETECTOR
- PUSH BUTTON DETECTOR
- STANDARD CONCRETE PULL BOX
- DOUBLE CONCRETE PULL BOX TYPE A, TYPE 1 DRAIN
- PREFORMED CLASS A PULL BOX
- CONDUIT PUSHED
- CONDUIT IN TRENCH
- MAST ARM WITH SIGNAL HEADS AND LED-A LUMINAIRE
- TYPE A BASE
- TYPE F BASE
- TYPE C BASE
- CCTV CAMERA
- DETECTION ZONE

SIGNAL HEAD LEGEND

SCALE

0 20 40 60

PROPOSED SIGNAL PLAN
I-270 EB RAMPS AND
BELLEFONTAINE RD
SHEET 2 OF 7

STATE OF MISSOURI
JASON LEE HAYNES
NUMBER PE-2004017183
PROFESSIONAL ENGINEER

THIS SHEET HAS BEEN SIGNED, SEALED, AND DATED ELECTRONICALLY

IF A SEAL IS PRESENT ON THIS SHEET IT HAS BEEN ELECTRONICALLY SEALED AND DATED.

DATE PREPARED 3/25/2026

ROUTE	STATE
I-270	MO
DISTRICT	SHEET NO.
SL	175

COUNTY: ST. LOUIS
JOB NO.: JSL0021
CONTRACT ID.:
PROJECT NO.:
BRIDGE NO.:

DESCRIPTION	DATE

MISSOURI HIGHWAYS AND TRANSPORTATION COMMISSION
105 WEST CAPITOL
JEFFERSON CITY, MO 65102
1-888-ASK-MODOT (1-888-275-6636)

HDR Engineering, Inc.
1001 Highlands Plaza Drive
Suite 200
St. Louis, MO 63110-1337
314-425-8300
Certificate of Authority: 000856

EFFECTIVE: 07-01-2018

| POST NUMBER | PULL BOX NUMBER | LOCATION APPROACH | LOCATION STATION | LOCATION OFFSET | BASE A 9 | BASE A 9.5 | BASE A 10 | BASE A 10.5 | BASE A 11 | BASE A 12 | BASE F 9 | BASE F 9.5 | BASE F 10 | BASE F 10.5 | BASE F 11 | BASE F 12 | BASE C | BASE CONCRETE** (CU. YDS.) | PULL BOX PREFORMED CLASS 1 | PREFORMED CLASS 2 | PREFORMED CLASS 3 | PREFORMED CLASS 5 | CONCRETE STANDARD | CONCRETE DOUBLE, TYPE A | CONCRETE DOUBLE, TYPE B | DRAIN TYPE* I | DRAIN TYPE* II A | DRAIN TYPE* II B | DRAIN TYPE* II C | POST TOP MOUNT POST 8 FT. | POST TOP MOUNT POST 15 FT. | TYPE C & CL ARM LENGTH A | ARM LENGTH A | ARM LENGTH A | ARM LENGTH A | TYPE C & CL SIGNAL SPACING B | SIGNAL SPACING C | SIGNAL SPACING D | SIGNAL SPACING D' | TYPE C & CL SIGN SPACING B | SIGN SPACING C | SIGN SPACING D | SIGN SPACING D' | TYPE B & BL ARM LENGTH E | E | K | E | K | E | K | LEFT ARM E SIGNAL SPACING F | G | H | H' | LEFT ARM E SIGN SPACING F | G | H | H' | RIGHT ARM K SIGNAL SPACING L | M | N | N' | RIGHT ARM K SIGN SPACING L | M | N | N' | INCLUDED ANGLE | LUMINAIRE BRACKET ARM* 4 FT. | 6 FT. | 8 FT. | 10 FT. | 12 FT. | 15 FT. |
|---|---|---

EFFECTIVE: 10-01-2015

CONDUIT (WITH #14 TRACER WIRE)

FROM	TO	CENTER TO CENTER DISTANCE	LOOP DET.	TRENCH				PUSHED			MEDIAN			ON STRUCTURE			REMARKS
			1"	2"	3"	4"		2"	3"	4"	2"	3"	4"	2"	3"		
P.S.	∅	EX.															INFORMATION ONLY
∅	⊠	107		115													
⊠	2	9				24											2 RUNS
2	②	11			14												
2	1	42								40							
1	①	21			24												
2	4	95								93							
4	④	7			8												
4	5	47								45							
5	⑤	5			6												
4	3	60								58							
3	③	10			13												

EFFECTIVE: 04-01-2018

POWER SUPPLY

LOCATION			POWER SUPPLY ASSEMBLY		CIRCUIT BREAKER TRIP RATING*				LIGHTING CONTROL * (ON POWER SUPPLY)		SERVICE POLE	
					CONTROLLER		POWER SUPPLY DISCONNECT					
APPROACH	STATION	OFFSET	DRAWING 902.15	DRAWING	AUXILIARY BREAKER	CONT & SIGNAL LAMPS	MAIN BREAKER		120 VOLT CONTROL CABINET	MAIN BREAKER	CONTRACT FURNISH	UTILITY COMPANY
							SIGNALS	LIGHTING				
EXISTING			Type		EX. Amps	EX. Amps	EX. Amps	Amps		Amps	Cl. Ft.	
			Type		Amps	Amps	Amps	Amps		Amps	Cl. Ft.	

CONTROLLER ASSEMBLY AND AUXILIARY EQUIPMENT

LOCATION			SYSTEM MASTER (CLOSED LOOP)		ACTUATED		ON-OFF* SWITCH TYPE		COORDINATION INTERFACE *						TIME * CLOCK	NEMA CABINET TYPE *			170 CABINET TYPE *		170 SOFTWARE *	
									12C/7C HARDWIRE (1)		TIME BASE	CLOSED LOOP		FIBER								
APPROACH	STATION	OFFSET	NEMA	170	NEMA	170	I	II	MASTER	LOCAL		NEMA	170			E	EV	DOUBLE	332	336S	BITRAN	WAPITI
BELLEFONTAINE	14+96	63'LT			1		1									1						

NEMA DETECTOR ASSIGNMENT

		CARD POSITION							
		1	2	3	4	5	6	7	8
CHANNEL	1		21 22	31 32					
	2	51	61 62 63						

NOTE: LAND 2C DETECTOR WIRES ON DETECTOR PANEL IN CABINET
TOTAL NUMBER OF DETECTOR CARDS(2-CHANNEL) = 3 (2)

DETECTOR SCHEDULE

DETECTOR NUMBER	APPROACH	TYPE				
		PUSH BUTTON	INDUCTION LOOP (2)			SL DETECTION(3)
			STANDARD	DELAY/ EXTEND *	CALL UNIT *	
23	WEST CROSSWALK	1				
24	WEST CROSSWALK	1				
21	BELLEFONTAINE SB					6'X30' ZONE
22	BELLEFONTAINE SB					6'X30' ZONE
51	BELLEFONTAINE SB					6'X30' ZONE
31	DUNN EB					6'X30' ZONE
32	DUNN EB					6'X30' ZONE
61	BELLEFONTAINE NB					**6'X30' ZONE**
62	BELLEFONTAINE NB					**6'X30' ZONE**
63	BELLEFONTAINE NB					6'X30' ZONE
TOTAL		2				

* ITEMS FOR WHICH SEPARATE PAYMENT WILL NOT BE MADE.

*** USE D3-1 FOR ONE LINE. USE D3-1B FOR TWO LINE.

(1) MoDOT "D" PLUG SHALL BE WIRED INTO ALL NEMA CONTROLLERS WITH 7C HARDWIRE INTERCONNECT.

(2) PAYMENT IS MADE FOR THE NUMBER OF 2-CHANNEL DETECTOR CARDS AS SHOWN BELOW THE ASSIGNMENT CHART.

(3) VIDEO DETECTORS ARE DEFINED IN JSP AS SL DISTRICT TRAFFIC SIGNAL DETECTION SYSTEM

SIGNAL SIGNS

QUANTITY	MUTCD SIGN NUMBER	SIZE	AREA	SIGN TOTAL AREA ITEM NO. 90208.33	SIGNAL SIGN MOUNTING HARDWARE ITEM NO. 90208.34
		INCHES	SQ.FT.	SQ.FT.	EA.
	R10-10L	24 X 30	5.0		
	R10-10R	24 X 30	5.0		
	R3-5L	30 X 36	7.5		
	R3-5R	30 X 36	7.5		
	R3-5A	30 X 36	7.5		
	R3-6L	30 X 36	7.5		
	R3-6R	30 X 36	7.5		
1	R3-2	36 X 36	9.0	9.0	1
1	R3-1	36 X 36	9.0	9.0	1
	R3-3	24 X 24	4.0		
2	R10-3E	9 X 15	0.9	1.8	**
	R10-11A	24 X 30	5.0		
	R10-13	36 X 24	6.0		
1	R10-27A	30 X 36	7.5	7.5	1
1	D3-1 ***	72 X 18	9.0	9.0	2
			SUBTOTAL	36.3	5
			TOTAL	37	5

**PUSHBUTTON SIGNS & MOUNTING HARDWARE INCLUDED IN 9024920 BID ITEM FOR PUSHBUTTONS

NEMA LOAD SWITCH ASSIGNMENTS

1	2	3	4	5	6	7	8	9	10	11	12	13	14	15	16
	∅2 SBT	∅3 EBL		∅5 SBL	∅6 NBT					OLC SBL		∅2 PED			

TOTAL NUMBER OF LOAD SWITCHES = 6

I-270 EB RAMPS AND BELLEFONTAINE RD
INTERSECTION

D-37C

STATE OF MISSOURI
JASON LEE HAYNES
NUMBER PE-2004017183
PROFESSIONAL ENGINEER
THIS SHEET HAS BEEN SIGNED, SEALED, AND DATED ELECTRONICALLY

DATE PREPARED 3/25/2026
ROUTE I-270 | STATE MO
DISTRICT SL | SHEET NO. 178
COUNTY ST. LOUIS
JOB NO. JSL0021
CONTRACT ID.
PROJECT NO.
BRIDGE NO.

IF A SEAL IS PRESENT ON THIS SHEET IT HAS BEEN ELECTRONICALLY SEALED AND DATED.

DESCRIPTION | DATE

MISSOURI HIGHWAYS AND TRANSPORTATION COMMISSION
105 WEST CAPITOL
JEFFERSON CITY, MO 65102
1-888-ASK-MODOT (1-888-275-6636)

HDR Engineering, Inc.
1001 Highlands Plaza Drive
Suite 200
St. Louis, MO 63110-1337
314-425-8300
Certificate of Authority: 000856

EFFECTIVE: 12-01-2017

WIRING DIAGRAM

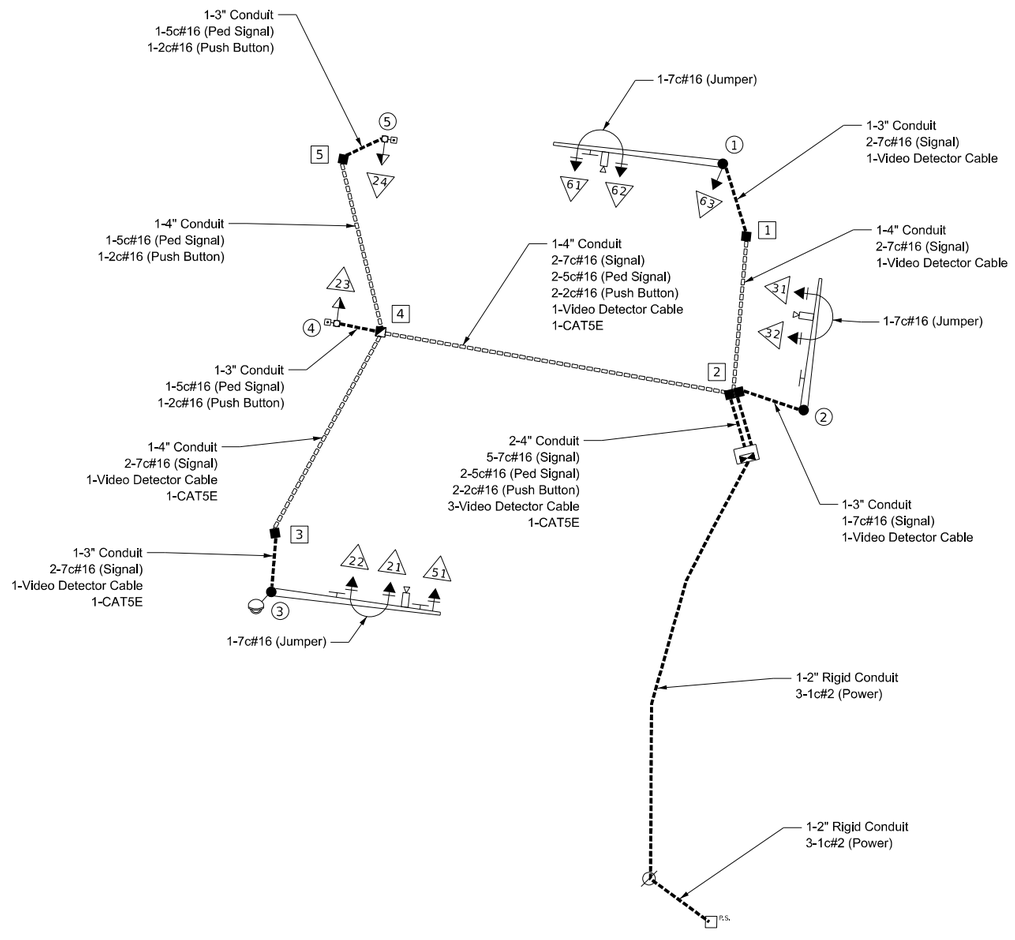

NOT TO SCALE

LEGEND

3"	CONDUIT CONTAINING CABLE WITH SIZE
	CABLE
X-Xc	MULTI-CONDUCTOR CABLE #16 AWG (UNLESS OTHERWISE INDICATED)
LIC	#14 AWG DETECTOR LEAD-IN CABLE (2C TWISTED SHIELDED)
X	PULL BOX WITH NUMBER
X	POST WITH NUMBER
X	POST WITH MAST ARM
X	POST WITH MAST ARM AND LUMINAIRE
X	DETECTOR WITH NUMBER
X	SIGNAL HEAD WITH NUMBER
	SIGNAL CONTROLLER
	POWER SUPPLY
	LIGHTING CONTROLLER

I-270 EB RAMPS AND BELLEFONTAINE RD

INTERSECTION

D-37D

STATE OF MISSOURI
JASON LEE HAYNES
NUMBER PE-2004017183
PROFESSIONAL ENGINEER
THIS SHEET HAS BEEN SIGNED, SEALED, AND DATED ELECTRONICALLY

DATE PREPARED 3/25/2026

ROUTE	STATE
I-270	MO
DISTRICT	SHEET NO.
SL	179

COUNTY: ST. LOUIS
JOB NO.: JSL0021
CONTRACT ID.:
PROJECT NO.:
BRIDGE NO.:

DESCRIPTION | DATE

IF A SEAL IS PRESENT ON THIS SHEET IT HAS BEEN ELECTRONICALLY SEALED AND DATED.

MISSOURI HIGHWAYS AND TRANSPORTATION COMMISSION
105 WEST CAPITOL
JEFFERSON CITY, MO 65102
1-888-ASK-MODOT (1-888-275-6636)

HDR Engineering, Inc.
1001 Highlands Plaza Drive
Suite 200
St. Louis, MO 63110-1337
314-425-8300
Certificate of Authority: 000856

EFFECTIVE: 12-01-2017

TRAFFIC PHASING AND COLOR SEQUENCE - ACTUATED CONTROLLERS

	PHASE 1	PHASE 2	PHASE 3	PHASE 4	PHASE 5	PHASE 6	PHASE 7	PHASE 8	PED Ø2 OVERLAP	PED Ø4 OVERLAP	PED Ø6 OVERLAP	PED Ø8 OVERLAP	
FACE NUMBERS		21 22	31 32		51	61 62 63			23 24			51	FACE NUMBERS
SIGNAL INDICATIONS R		R	RL			R R			DW DW			RL	R
SIGNAL INDICATIONS Y		Y	YL			Y Y						YL	Y
SIGNAL INDICATIONS FYA									FDW FDW			FYL	FYA
SIGNAL INDICATIONS G		S				S G			W W				G
DETECTOR ASSIGNMENTS			L		L								DETECTOR ASSIGNMENTS
DETECTOR ASSIGNMENTS (PEDS. ONLY)													
OVERLAP PARENT PHASES												6	

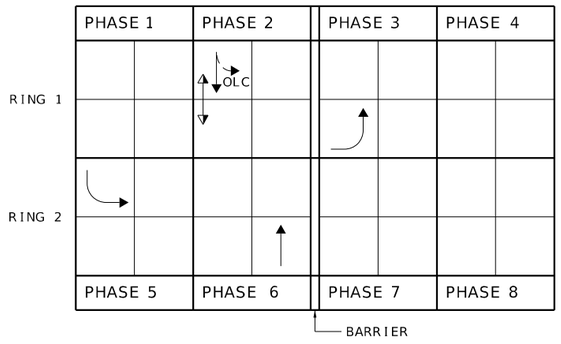

RING STRUCTURE

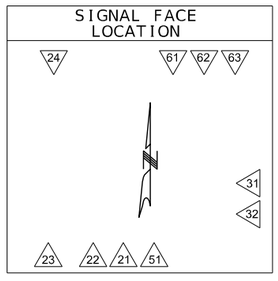

RING AND BARRIER DIAGRAM

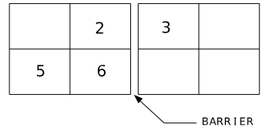

IF CALLED, ALL NON-CONFLICTING PHASES SHALL COMBINE AND TIME CONCURRENTLY. TIME TO BE DETERMINED BY THE ENGINEER AT SIGNAL TURN ON AND SET IN THE CONTROLLER BY THE CONTRACTOR.

LEGEND

- ACTUATED VEHICULAR MOVEMENT
- PARTIALLY RESTRICTED ACTUATED VEHICULAR MOVEMENT
- NON-ACTUATED VEHICULAR MOVEMENT
- PARTIALLY RESTRICTED NON-ACTUATED VEHICULAR MOVEMENT
- ACTUATED PEDESTRIAN MOVEMENT
- NON-ACTUATED PEDESTRIAN MOVEMENT
- VEHICLE STOPPED
- FDW — FLASHING DON'T WALK
- W — WALK
- DW — DON'T WALK
- R/W — RIGHT OF WAY INTERVAL
- YRt — YELLOW RIGHT ARROW
- RT. — GREEN RIGHT ARROW
- LY -YL — YELLOW LEFT ARROW
- L — GREEN LEFT ARROW
- S — GREEN STRAIGHT AHEAD ARROW
- G — CIRCULAR GREEN
- Y — CIRCULAR YELLOW
- R — CIRCULAR RED
- RL — RED LEFT ARROW
- Ø — TRAFFIC PHASE
- AO — ALL OTHERS
- FR — FLASHING RED
- FY — FLASHING CIRCULAR YELLOW
- FYL — FLASHING YELLOW LEFT ARROW

FLASHING OPERATION	
ALL	FR

CONTROLLER TYPE	NEMA

TRAFFIC SIGNAL CONTROL OPERATION

INTERSECTION OF

I-270 EB RAMPS WITH BELLEFONTAINE RD

D-38A

STATE OF MISSOURI
JASON LEE HAYNES
NUMBER PE-2004017183
PROFESSIONAL ENGINEER
THIS SHEET HAS BEEN SIGNED, SEALED, AND DATED ELECTRONICALLY

DATE PREPARED 3/25/2026
ROUTE I-270 | STATE MO
DISTRICT SL | SHEET NO. 180
COUNTY ST. LOUIS
JOB NO. JSL0021
CONTRACT ID.
PROJECT NO.
BRIDGE NO.

DESCRIPTION
DATE

IF A SEAL IS PRESENT ON THIS SHEET IT HAS BEEN ELECTRONICALLY SEALED AND DATED.

MISSOURI HIGHWAYS AND TRANSPORTATION COMMISSION
105 WEST CAPITOL
JEFFERSON CITY, MO 65102
1-888-ASK-MODOT (1-888-275-6636)

HDR Engineering, Inc.
1001 Highlands Plaza Drive
Suite 200
St. Louis, MO 63110-1337
314-425-8300
Certificate of Authority: 000856

SEC/SUR 33 TWP 47N RGE 7E

(75.5'-70.5') PRESTRESSED CONCRETE NU-GIRDER SPANS

Pile Encasement	Option Used (✓)
Pipe Pile Spacer	
Pile Jacket	

MoDOT Construction personnel will indicate the pile encasement used.

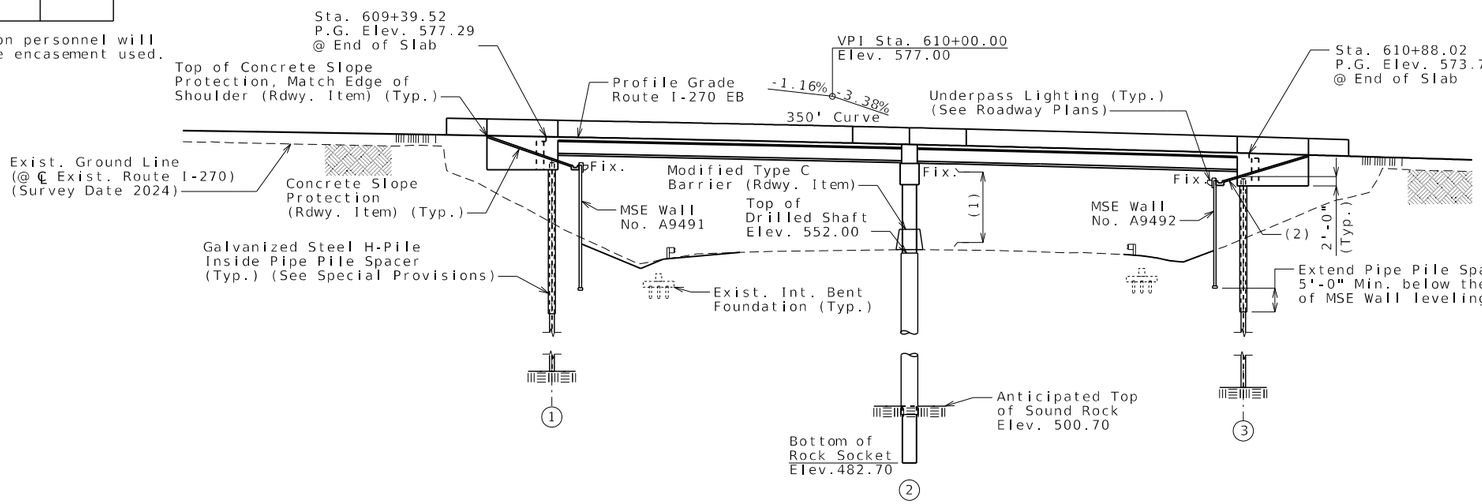

GENERAL ELEVATION

(1) Calculated Min. Vertical Clr. = 17'-1"

(2) 2:1 (H:V) Max. slope to bent between MSE Wall and front face of end bent. Transition to 3:1 (H:V) Max. slope normal to bent outside of bridge limits, see Roadway plans.

(*) To facilitate the installation of the proposed intermediate bent foundations for Bridges No. A9489 & A9490 the contractor will be required to remove a portion of the existing footing concrete and piles. Cost of any removal is considered incidental to Removal of Bridges (J0847).

All bents are parallel.

All dimensions are horizontal.

For General Notes, Estimated Quantities, Estimated Quantities for Slab on Concrete NU-Girder and Location Sketch, see Sheet No. 2.

For Foundation Data, see Sheet No. 3.

For Substructure Layout, see Sheet No. 7.

Contractor shall coordinate construction of Bridge No. A9489 with MSE Walls No. A9491 & A9492.

Roadway fill, exclusive of Lightweight Cellular Concrete Backfill and Select Granular Backfill for Structural Systems, shall be completed to the final roadway section and up to the elevation of the bottom of the concrete beam within the limits of the structure and for not less than 25 feet in back of the fill face of the end bents before any piles are driven for any bents falling within the embankment section.

Indicates location of borings.

Notice and Disclaimer Regarding Boring Log Data

The locations of all subsurface borings for this structure are shown on the plan sheet for this structure. The boring data for all locations indicated, as well as any other boring logs or other factual records of subsurface data and investigations performed by the department for the design of the project, are shown on Sheets No. 37 thru 40 and may be included in the Electronic Bridge Deliverables. They will also be available from the Project Contact upon written request. No greater significance or weight should be given to the boring data depicted on the plan sheets than is given to the subsurface data available from the district or elsewhere.

The Commission does not represent or warrant that any such boring data accurately depicts the conditions to be encountered in constructing this project. A contractor assumes all risks it may encounter in basing its bid prices, time or schedule of performance on the boring data depicted here or those available from the district, or on any other documentation not expressly warranted, which the contractor may obtain from the Commission.

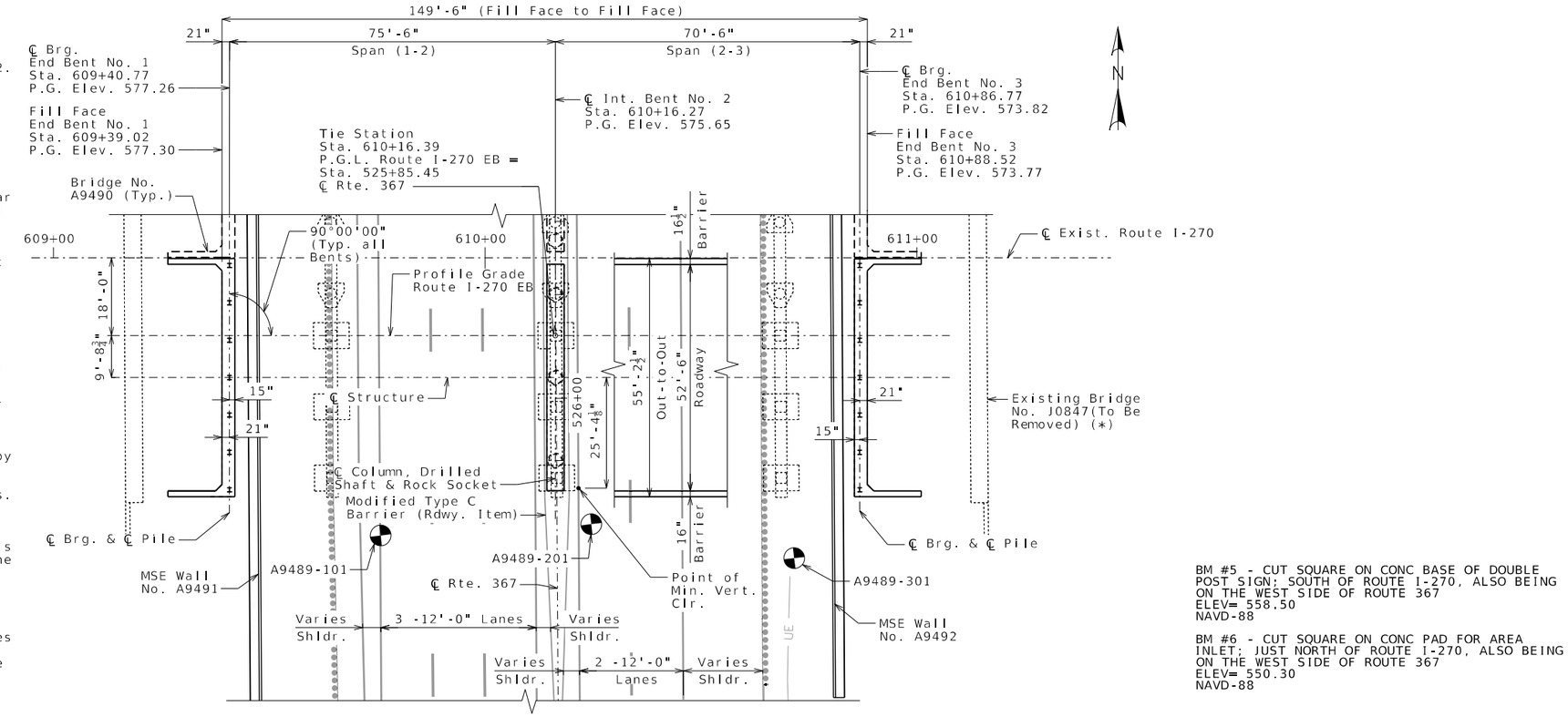

PLAN

BM #5 - CUT SQUARE ON CONC BASE OF DOUBLE POST SIGN; SOUTH OF ROUTE I-270, ALSO BEING ON THE WEST SIDE OF ROUTE 367
ELEV= 558.50
NAVD-88

BM #6 - CUT SQUARE ON CONC PAD FOR AREA INLET; JUST NORTH OF ROUTE I-270, ALSO BEING ON THE WEST SIDE OF ROUTE 367
ELEV= 550.30
NAVD-88

BRIDGE: ROUTE I-270 EB OVER ROUTE 367

ROUTE I-270 EB FROM ROUTE AC TO ROUTE H
ABOUT 1.5 MILES EAST OF ROUTE AC
BEGINNING STATION 609+39.02 (PROFILE GRADE ROUTE I-270 EB)

Designed September 2025
Detailed September 2025
Checked September 2025

Note: This drawing is not to scale. Follow dimensions.

STATE OF MISSOURI
RYAN DAVID SHAW
NUMBER PE-2017000368
PROFESSIONAL ENGINEER
THIS SHEET HAS BEEN SIGNED, SEALED AND DATED ELECTRONICALLY

DATE PREPARED 4/1/2026
ROUTE I-270 | STATE MO
DISTRICT BR | SHEET NO. 1
COUNTY ST. LOUIS
JOB NO. JSL0021
CONTRACT ID.
PROJECT NO.
BRIDGE NO. A9489

DESCRIPTION | DATE

MISSOURI HIGHWAYS AND TRANSPORTATION COMMISSION
105 WEST CAPITOL
JEFFERSON CITY, MO 65102
1-888-ASK-MODOT (1-888-275-6636)

HDR Engineering, Inc.
1001 Highlands Plaza Drive
Suite 200
St. Louis, MO 63110
314-425-8300
Certificate of Authority: 000856

Estimated Quantities

Item		Substr.	Superstr.	Total
Temporary Shoring	lump sum			1
Removal of Bridges (J0847)	lump sum			1
Bridge Approach Slab (Major)	sq. yard		241	241
Drilled Shafts (3 ft. 6 in. Dia.)	linear foot	154		154
Rock Sockets (3 ft. 0 in. Dia.)	linear foot	54		54
Video Camera Inspection	each	3		3
Foundation Inspection Holes	linear foot	84		84
Sonic Logging Testing	each	3		3
Galvanized Structural Steel Piles (12 in.)	linear foot	1001		1001
Pile Point Reinforcement	each	14		14
Class B Concrete (Substructure)	cu. yard	102.2		102.2
Type D Barrier	linear foot		323	323
Modified Type D Barrier	linear foot		40	40
Slab on Concrete NU-Girder	sq. yard		911	911
NU 35, Prestressed Concrete NU-Girder	linear foot		876	876
Reinforcing Steel (Galvanized)	pound	27,770		27,770
Conduit System on Structure	lump sum		1	1
Protective Coating - Concrete Bents and Piers (Epoxy)	lump sum	1		1
Vertical Drain at End Bents	each	2		2
Laminated Neoprene Bearing Pad	each		12	12
Laminated Neoprene Bearing Pad (Tapered)	each		12	12
Pipe Pile Spacers	each	14		14

Cost of L4x4 ASTM A709 Grade 36 HP pile anchors and 3/4-inch diameter ASTM F3125 Grade A325 Type 1 bolts, complete in place, will be considered completely covered by the contract unit price for Galvanized Structural Steel Piles (12 in.).

All concrete above the construction joint in the end bents is included in the Estimated Quantities for Slab on Concrete NU-Girder.

All reinforcement in the end bents is included in the Estimated Quantities for Slab on Concrete NU-Girder.

All reinforcement in the intermediate bent concrete diaphragms except reinforcement embedded in the beam cap is included in the Estimated Quantities for Slab on Concrete NU-Girder.

All concrete above the intermediate beam cap is included in the Estimated Quantities for Slab on Concrete NU-Girder.

Estimated Quantities for Slab on Concrete NU-Girder

Item		Total
Class B-2 Concrete	cu. yard	298
Reinforcing Steel (Galvanized)	pound	87,490

The table of Estimated Quantities for Slab on Concrete NU-Girder represents the quantities used by the State in preparing the cost estimate for concrete slabs. The area of the concrete slab will be measured to the nearest square yard longitudinally from end of slab to end of slab and transversely from out to out of bridge slab (or with the horizontal dimensions as shown on the plan of slab). Payment for stay-in-place corrugated steel forms, conventional forms, all concrete and galvanized reinforcing steel will be considered completely covered by the contract unit price for the slab. Variations may be encountered in the estimated quantities but the variations cannot be used for an adjustment in the contract unit price.

Method of forming the slab shall be as shown on the plans and in accordance with Sec 703. All hardware for forming the slab to be left in place as a permanent part of the structure shall be coated in accordance with ASTM A123 or ASTM B633 with a thickness class SC 4 and a finish type I, II or III.

Slab shall be cast-in-place with conventional forms or stay-in-place corrugated steel forms. Precast prestressed panels will not be premitted.

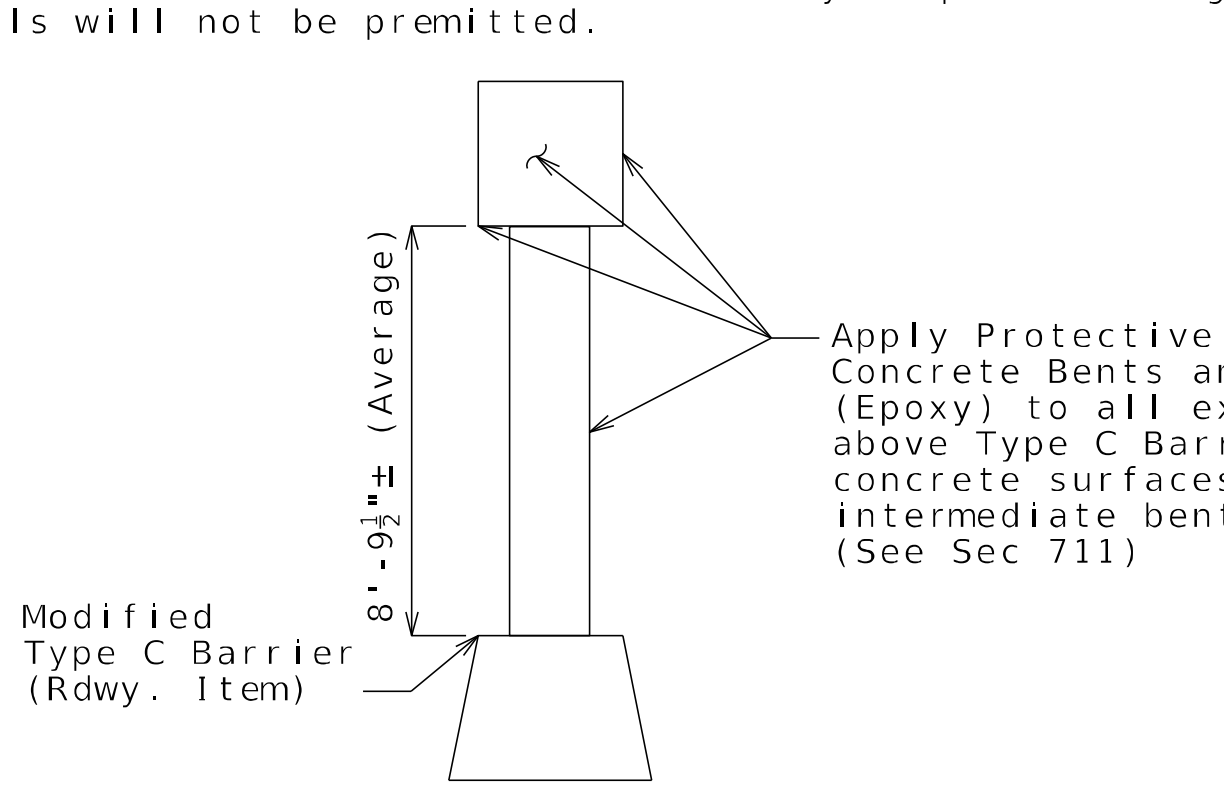

PROTECTIVE COATING DETAILS
AT INTERMEDIATE BENT NO. 2

General Notes:

DESIGN SPECIFICATIONS:
2020 AASHTO LRFD Bridge Design Specifications (9th Ed.)
2023 AASHTO Guide Specifications for LRFD Seismic Bridge Design (3rd Ed.)
Seismic Design Category = B (Seismic Details plus Abutment Seismic Design)
Design earthquake response spectral acceleration coefficient at 1.0 second period, S_{D1} = 0.219g
Acceleration coefficient (effective peak ground acceleration coefficient), A_s = 0.229g

DESIGN LOADING:
Vehicular = HL-93
Future Wearing Surface = 35 lb/sf
Earth = 120 lb/cf
Equivalent Fluid Pressure = 45 lb/cf (Min.)
Superstructure: Simply-Supported, Non-Composite for dead load.
Continuous Composite for live load.

DESIGN UNIT STRESSES:

Class B Concrete (Substructure)	f'c = 3,000 psi
Class B-2 Concrete (Drilled Shafts & Rock Sockets)	f'c = 4,000 psi
Class B-2 Concrete (Superstructure, except Prestressed Girders and Barrier)	f'c = 4,000 psi
Class B-1 Concrete (Barrier)	f'c = 4,000 psi
Reinforcing Steel (ASTM A706 Grade 60)	fy = 60,000 psi
Structural Steel HP Pile (ASTM A709 Grade 50)	fy = 50,000 psi

For prestressed girder stresses, see Sheets No. 18 thru 21.

NEOPRENE PADS:
Neoprene bearing pads shall be 60 durometer and shall be in accordance with Sec 716.

JOINT FILLER:
All joint filler shall be in accordance with Sec 1057 for preformed sponge rubber expansion and partition joint filler, except as noted.

REINFORCING STEEL:
Minimum clearance to reinforcing steel shall be 1 1/2", unless otherwise shown.

MBS refers to mechanical bar splices. Mechanical bar splices shall be in accordance with Sec 706 or 710 except that no measurement will be made for mechanical bar splices and they will be considered completely covered by the contract unit price for other items.

GALVANIZED REINFORCING STEEL:
Specification, materials, zinc coating process and construction practice shall be in accordance with ASTM A1094/A1094M-20.

Galvanized reinforcing steel shall not come in contact with uncoated reinforcing steel. Nylon, PVC or Polyethylene spacers shall be used where necessary. Nylon cable ties shall be used to bind the spacers to the reinforcement.

RESIN ANCHORS:
The contractor shall use one of the qualified resin anchor systems in accordance with Sec 1039.

The minimum embedment depth in concrete with f'c = 4,000 psi for the resin anchor systems shall be that required to meet the minimum ultimate pullout strength in accordance with Sec 1039 but shall not be less than 5".

CONCRETE PROTECTIVE COATINGS:
Protective coating for concrete bents and piers (Epoxy) shall be applied as shown on the bridge plans and in accordance with Sec 711.

STAY-IN-PLACE CORRUGATED STEEL FORMS:
Corrugated steel forms, supports, closure elements and accessories shall be in accordance with grade requirement and coating designation G165 of ASTM A653. Complete shop drawings of the permanent steel deck forms shall be required in accordance with Sec 1080.

Corrugations of stay-in-place forms shall be filled with an expanded polystyrene material. The polystyrene material shall be placed in the forms with an adhesive in accordance with the manufacturer's recommendations.

Form sheets shall not rest directly on the top of girder flanges. Sheets shall be securely fastened to form supports with a minimum bearing length of one inch on each end. Form supports shall be placed in direct contact with the flange. Welding on or drilling holes in the girder flanges will not be permitted. All steel fabrication and construction shall in accordance with Sec 1080 and 712. Certified field welders will not be required for welding of the form supports.

The design of stay-in-place corrugated steel forms is per manufacturer which shall be in accordance with Sec 703 for false work and forms. Maximum actual weight of corrugated steel forms allowed shall be 4 psf assumed for girder loading.

TRAFFIC HANDLING:
1) Close all Route I-270 lanes on the existing EB structure (J0847).

2) Reduce Route I-270 WB & EB traffic to two lanes and shift EB traffic onto existing WB structure (J0847) utilizing a temporary crossover with barrier system.

3) Maintain two lanes of traffic in each direction on existing WB structure (J0847) while construction on Bridge No. A9489 completes (all bridge work, except for the median portion of the bridge approach slab and Modified Type D barrier).

4) Shift two lanes of EB traffic onto new EB Bridge No. A9489 and maintain two lanes of WB traffic on existing WB structure (J0847) while the remainder of the Bridge No. A9489 construction completes (median portion of bridge approach slab and Modified Type D barrier).

5) Close all Route I-270 lanes on the existing WB structure (J0847).

6) Shift Route I-270 WB & EB traffic onto new EB Bridge No. A9489. Maintain two lanes of traffic in each direction on new Bridge No. A9489 while construction of Bridge No. A9490 completes.

See roadway plans for traffic control and Sheets No. 4 thru 6 for staged construction details.

Vertical clearance for Route 367 traffic during construction shall be 15'-6" minimum over all through lanes of traffic.

The Contractor shall maintain a minimum of two 12'-0" through lanes in each direction during construction.

MISCELLANEOUS:
High strength bolts, nuts and washers will be sampled for quality assurance as specified in Sec 106.

Outline of existing work is indicated by light dashed lines. Heavy lines indicate new work.

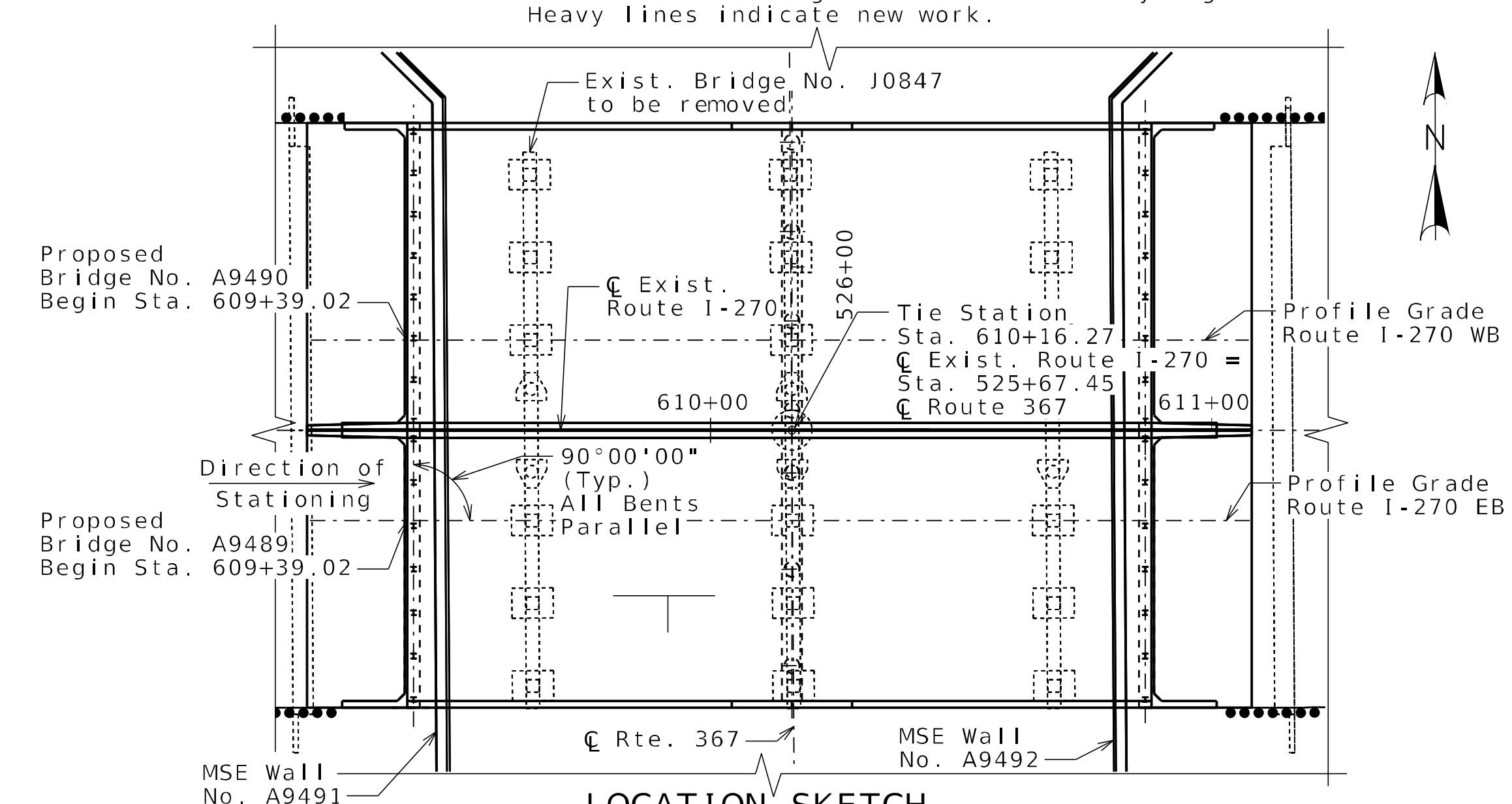

LOCATION SKETCH

STATE OF MISSOURI
RYAN DAVID SHAW
NUMBER PE-2017000368
PROFESSIONAL ENGINEER
THIS SHEET HAS BEEN SIGNED, SEALED AND DATED ELECTRONICALLY

DATE PREPARED	4/1/2026
ROUTE	I-270
STATE	MO
DISTRICT	BR
SHEET NO.	2
COUNTY	ST. LOUIS
JOB NO.	JSL0021
CONTRACT ID.	
PROJECT NO.	
BRIDGE NO.	A9489

DESCRIPTION
DATE

MISSOURI HIGHWAYS AND TRANSPORTATION COMMISSION
105 WEST CAPITOL
JEFFERSON CITY, MO 65102
1-888-ASK-MODOT (1-888-275-6636)

HDR Engineering, Inc.
1001 Highlands Plaza Drive
Suite 200
St. Louis, MO 63110
314-425-8300
Certificate of Authority: 000856

Detailed September 2025
Checked September 2025

Note: This drawing is not to scale. Follow dimensions.

c:\pwworking\central01\d4975494\B_A9489_002_SL0021.dgn 1:36:13 PM 4/1/2026

Foundation Data

Type	Design Data		Bent Number 1	Bent Number 2	Bent Number 3
Load Bearing Pile	Pile Type and Size		HP 12x53		HP 12x53
	Number	ea	7		7
	Approximate Length Per Each	ft	71		72
	Pile Point Reinforcement	ea	All		All
	Min. Galvanized Penetration (Elev.)	ft	Full Length		Full Length
	Minimum Tip Penetration (Elev.)	ft	--		--
	Criteria for Min. Tip Penetration		(*)		(*)
	Pile Driving Verification Method		DF		DF
	Resistance Factor		0.4		0.4
	Minimum Nominal Axial Compressive Resistance	kip	594		594
Rock Socket	Number	ea		3	
	Layer 1: Foundation Material			Strong Rock	
	Layer 1: Elevation Range	ft		500.7 - 498.7	
	Layer 1: Minimum Nominal Axial Compressive Resistance (Side Resistance)	ksf		0.0	
	Layer 2: Foundation Material			Strong Rock	
	Layer 2: Elevation Range	ft		498.7-489.2	
	Layer 2: Minimum Nominal Axial Compressive Resistance (Side Resistance)	ksf		16.2	
	Layer 3: Foundation Material			Strong Rock	
	Layer 3: Elevation Range	ft		489.2-482.7	
	Layer 3: Minimum Nominal Axial Compressive Resistance (Side Resistance)	ksf		13.4	

DF = FHWA-modified Gates Dynamic Formula

(*) HP piles are anticipated to be driven to refusal on rock. Review all borings for depth of rock and restrict driving as appropriate to comply with hard rock driving criteria in accordance with Sec 702. When pile refusal on rock occurs, as approved by the engineer, the minimum nominal axial compressive resistance is verified and no additional pile driving verification method is required.

Load Bearing Pile:

$$\text{Minimum Nominal Axial Compressive Resistance} = \frac{\text{Maximum Factored Loads}}{\text{Resistance Factor}}$$

Rock Socket (Drilled Shafts):

$$\text{Minimum Nominal Axial Compressive Resistance (Side Resistance)} = \frac{\text{Maximum Factored Loads}}{\text{Resistance Factors}}$$

Pile point reinforcement need not be galvanized. Shop drawings will not be required for pile point reinforcement.

The contractor shall make every effort to achieve the minimum galvanized penetration (elevation) shown on the plans for all piles. Deviations in penetration less than 5 feet of the minimum will be considered acceptable provided the contractor makes the necessary corrections to ensure the minimum penetration is achieved on subsequent piles.

FOUNDATION DATA

Detailed September 2025
Checked September 2025

Note: This drawing is not to scale. Follow dimensions.

STATE OF MISSOURI
RYAN DAVID SHAW
NUMBER PE-2017000366
PROFESSIONAL ENGINEER
THIS SHEET HAS BEEN SIGNED, SEALED AND DATED ELECTRONICALLY

DATE PREPARED 4/1/2026
ROUTE I-270 | STATE MO
DISTRICT BR | SHEET NO. 3
COUNTY ST. LOUIS
JOB NO. JSL0021
CONTRACT ID.
PROJECT NO.
BRIDGE NO. A9489

DESCRIPTION | DATE

MISSOURI HIGHWAYS AND TRANSPORTATION COMMISSION
MoDOT
105 WEST CAPITOL
JEFFERSON CITY, MO 65102
1-888-ASK-MODOT (1-888-275-6636)

HDR Engineering, Inc.
1001 Highlands Plaza Drive
Suite 200
St. Louis, MO 63110
314-425-8300
Certificate of Authority: 000856

c:\pwworking\central01\d4975494\B_A9489_003_SL0021.dgn 1:36:19 PM 4/1/2026

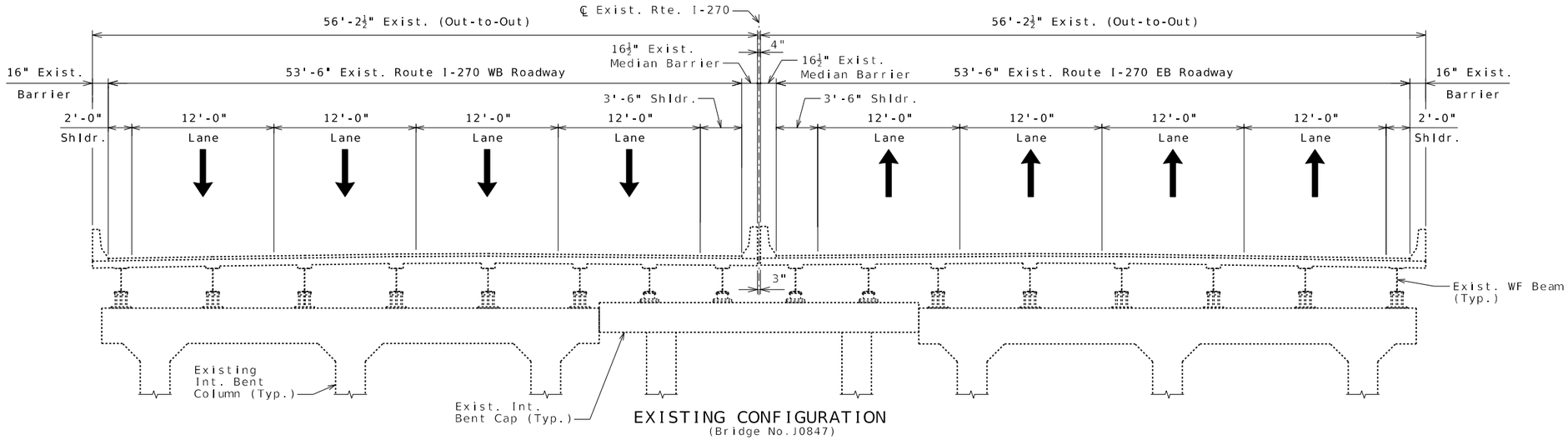

EXISTING CONFIGURATION
(Bridge No.J0847)

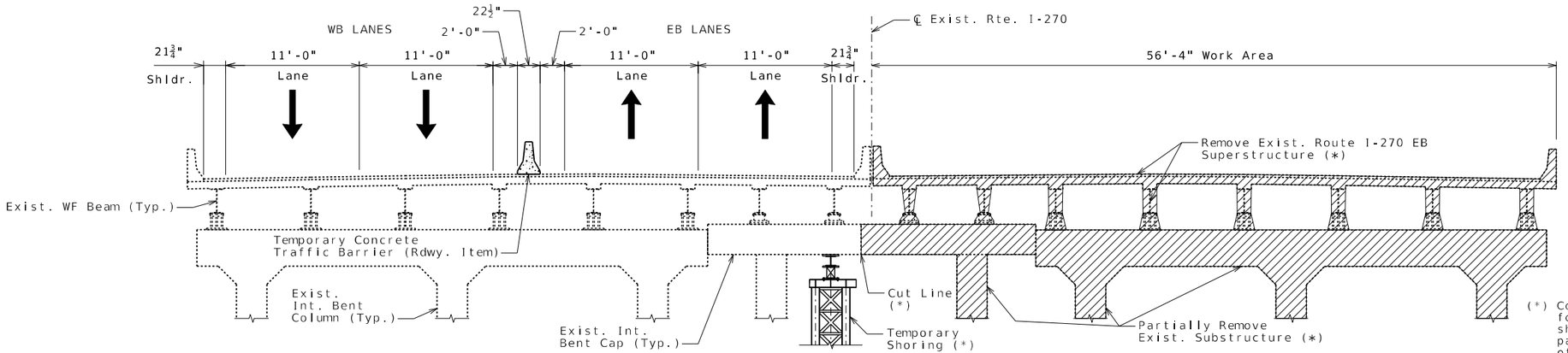

PHASE 1A REMOVAL

(*) Contractor is responsible for the stability of the shared substructure during partial removal. Location of the cut line and design of temporary shoring tower to be determined by the contractor.

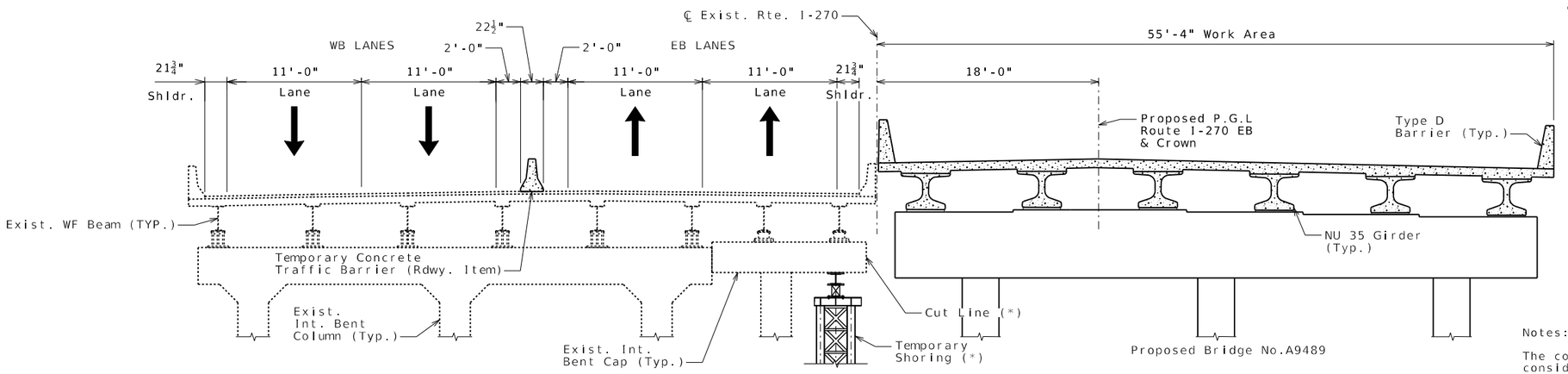

PHASE 1A CONSTRUCTION

Notes:

The cost of Removal of Bridges shall be considered completely covered by the contract lump sum price for Removal of Bridges (J0847) for Bridge No. A9489.

Denotes Removal

STAGING PLANS

Detailed September 2025
Checked September 2025

Note: This drawing is not to scale. Follow dimensions.

Sheet No. 4 of 40

STATE OF MISSOURI
RYAN DAVID SHAW
NUMBER PE-2017000366
PROFESSIONAL ENGINEER
THIS SHEET HAS BEEN SIGNED, SEALED AND DATED ELECTRONICALLY

DATE PREPARED	4/1/2026
ROUTE	I-270
STATE	MO
DISTRICT	BR
SHEET NO.	4
COUNTY	ST. LOUIS
JOB NO.	JSL0021
CONTRACT ID.	
PROJECT NO.	
BRIDGE NO.	A9489

DESCRIPTION

DATE

MISSOURI HIGHWAYS AND TRANSPORTATION COMMISSION

MoDOT

105 WEST CAPITOL
JEFFERSON CITY, MO 65102
1-888-ASK-MODOT (1-888-275-6636)

HDR Engineering, Inc.
1001 Highlands Plaza Drive
Suite 200
St. Louis, MO 63110
314-425-8300
Certificate of Authority: 000856

c:\pwworking\central01\d4975494\B_A9489_004_SL0021.dgn 1:36:29 PM 4/1/2026

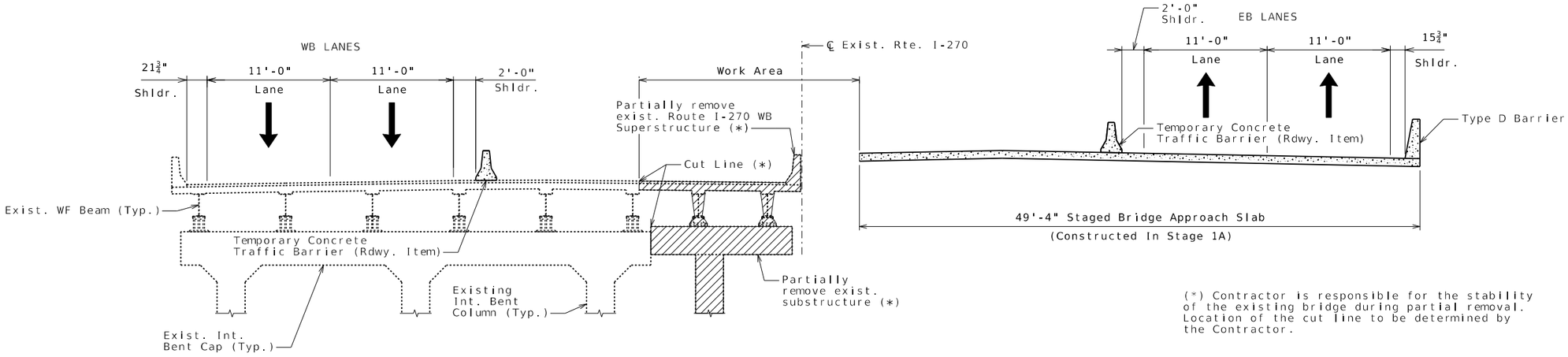

(*) Contractor is responsible for the stability of the existing bridge during partial removal. Location of the cut line to be determined by the Contractor.

PHASE 1B REMOVAL

(Shown near proposed End Bent No. 1, End Bent No. 4 similar)

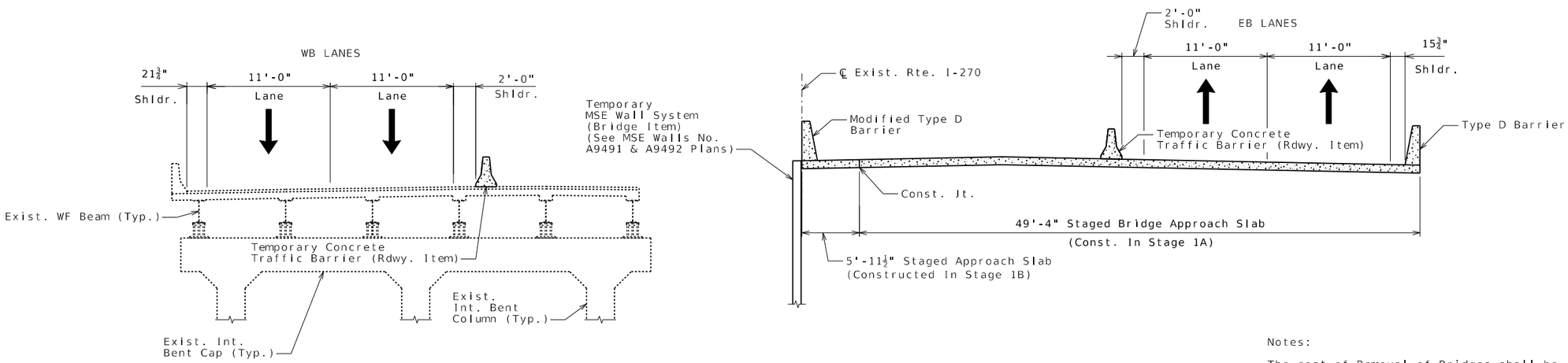

PHASE 1B CONSTRUCTION

(Shown near proposed End Bent No. 1, End Bent No. 4 similar)

Notes:

The cost of Removal of Bridges shall be considered completely covered by the contract lump sum price for Removal of Bridges (J0847) for Bridge No. A9489.

For Approach Slab Details, see Sheet No. 32.

▨ Denotes Removal

STAGING PLANS

Detailed September 2025
Checked September 2025

Note: This drawing is not to scale. Follow dimensions.

STATE OF MISSOURI
RYAN DAVID SHAW
NUMBER PE-2017000366
PROFESSIONAL ENGINEER
THIS SHEET HAS BEEN SIGNED, SEALED AND DATED ELECTRONICALLY

DATE PREPARED	4/1/2026
ROUTE I-270	STATE MO
DISTRICT BR	SHEET NO. 5
COUNTY	ST. LOUIS
JOB NO.	JSL0021
CONTRACT ID.	
PROJECT NO.	
BRIDGE NO.	A9489

DATE	DESCRIPTION

MISSOURI HIGHWAYS AND TRANSPORTATION COMMISSION

MoDOT

105 WEST CAPITOL
JEFFERSON CITY, MO 65102
1-888-ASK-MODOT (1-888-275-6636)

HDR Engineering, Inc.
1001 Highlands Plaza Drive
Suite 200
St. Louis, MO 63110
314-425-8300
Certificate of Authority: 000856

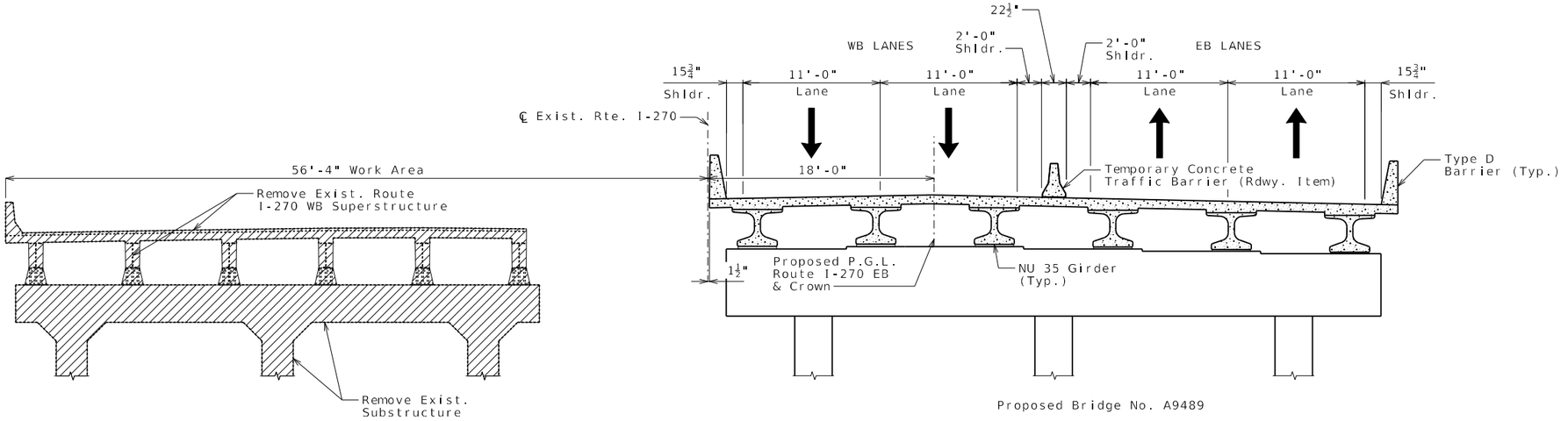

PHASE 2 REMOVAL

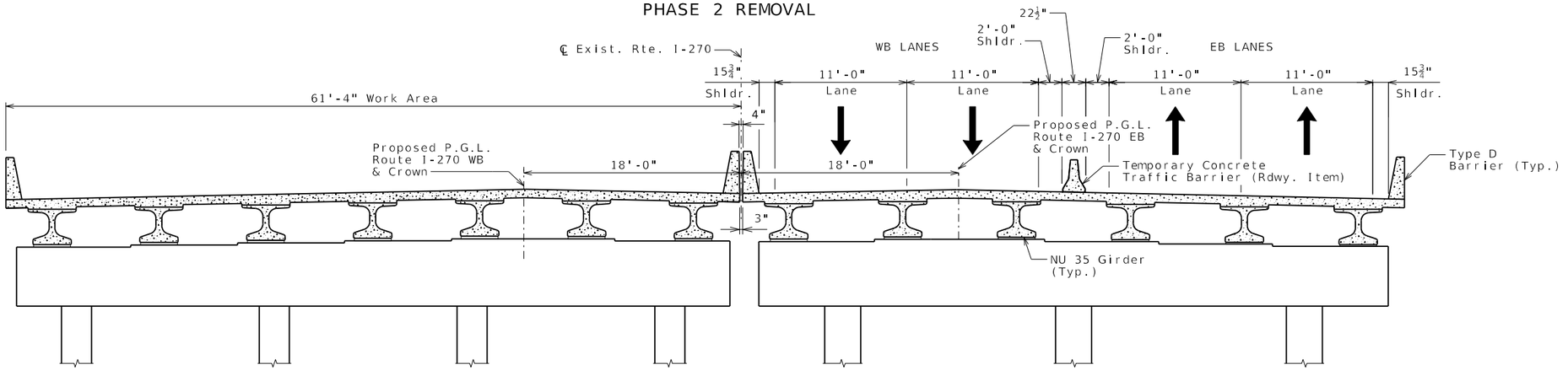

PHASE 2 CONSTRUCTION

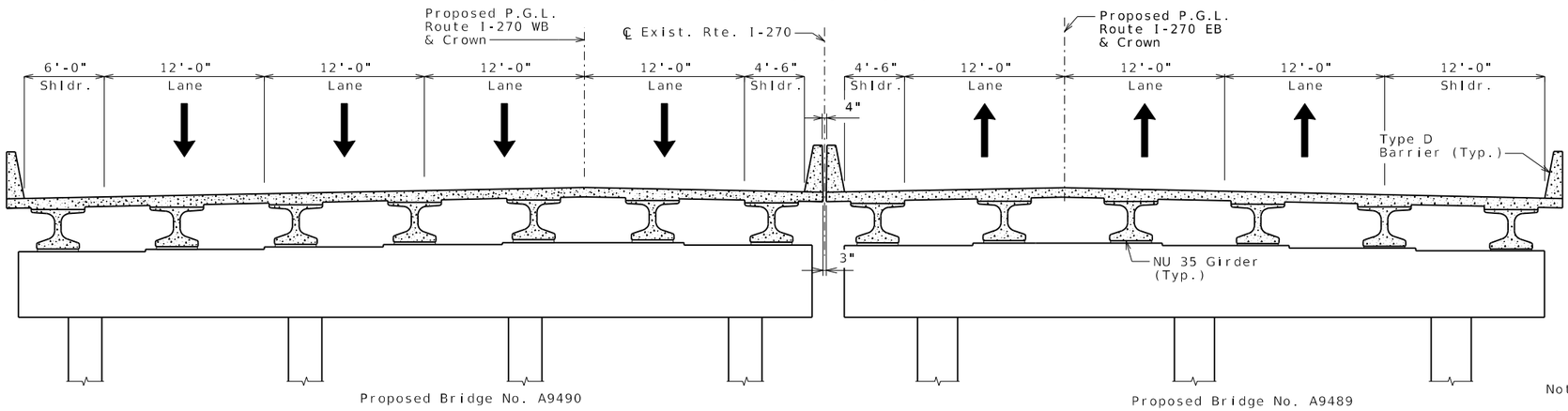

FINAL CONFIGURATION

STAGING PLANS

Notes:

The cost of Removal of Bridges shall be considered completely covered by the contract lump sum price for Removal of Bridges (J0847) for Bridge No. A9489.

Denotes Removal

Detailed September 2025
Checked September 2025

Note: This drawing is not to scale. Follow dimensions.

STATE OF MISSOURI
RYAN DAVID SHAW
NUMBER PE-2017000366
PROFESSIONAL ENGINEER
THIS SHEET HAS BEEN SIGNED, SEALED AND DATED ELECTRONICALLY

DATE PREPARED	4/1/2026
ROUTE	I-270
STATE	MO
DISTRICT	BR
SHEET NO.	6
COUNTY	ST. LOUIS
JOB NO.	JSL0021
CONTRACT ID.	
PROJECT NO.	
BRIDGE NO.	A9489

DESCRIPTION

DATE

MISSOURI HIGHWAYS AND TRANSPORTATION COMMISSION

MoDOT

105 WEST CAPITOL
JEFFERSON CITY, MO 65102
1-888-ASK-MODOT (1-888-275-6636)

HDR Engineering, Inc.
1001 Highlands Plaza Drive
Suite 200
St. Louis, MO 63110
314-425-8300
Certificate of Authority: 000856

c:\pwworking\central01\d4975494\B_A9489_006_SL0021.dgn 1:36:43 PM 4/1/2026

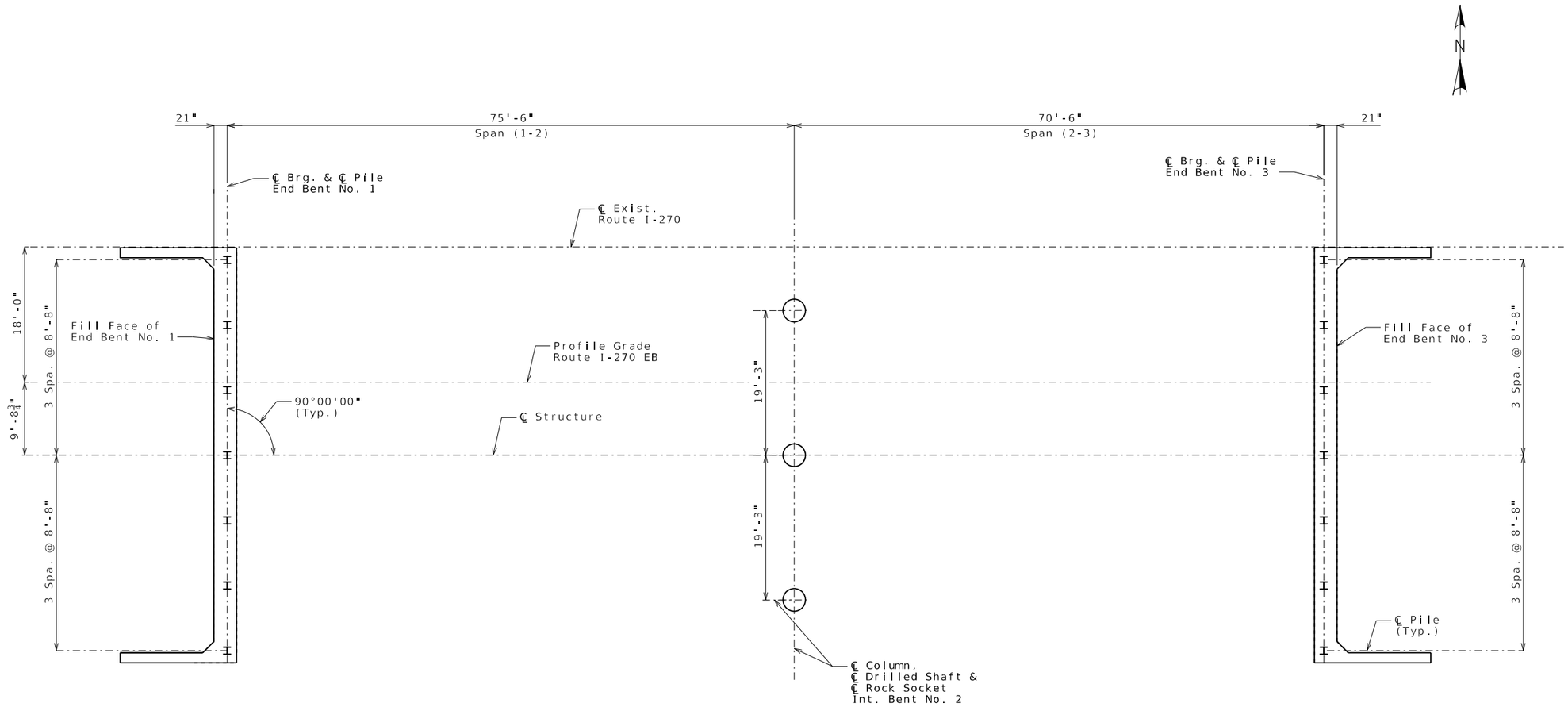

PART PLAN SHOWING FOUNDATION SPACING

Notes:

For Foundation Data, see Sheet No. 3.

For Staging Plans, see Sheets No. 4 thru 6.

For End Bent No. 1 Details, see Sheets No. 8 thru 10.

For Intermediate Bent No. 2 Details, see Sheets No. 12 & 13.

For End Bent No. 3 Details, see Sheets No. 14 thru 16.

SUBSTRUCTURE LAYOUT

Detailed September 2025
Checked September 2025

Note: This drawing is not to scale. Follow dimensions.

STATE OF MISSOURI
RYAN DAVID SHAW
NUMBER PE-2017000366
PROFESSIONAL ENGINEER

THIS SHEET HAS BEEN SIGNED, SEALED AND DATED ELECTRONICALLY

DATE PREPARED	4/1/2026
ROUTE	I-270
STATE	MO
DISTRICT	BR
SHEET NO.	7
COUNTY	ST. LOUIS
JOB NO.	JSL0021
CONTRACT ID.	
PROJECT NO.	
BRIDGE NO.	A9489

DESCRIPTION

DATE

MISSOURI HIGHWAYS AND TRANSPORTATION COMMISSION

MoDOT

105 WEST CAPITOL
JEFFERSON CITY, MO 65102
1-888-ASK-MODOT (1-888-275-6636)

HDR Engineering, Inc.
1001 Highlands Plaza Drive
Suite 200
St. Louis, MO 63110
314-425-8300
Certificate of Authority: 000856

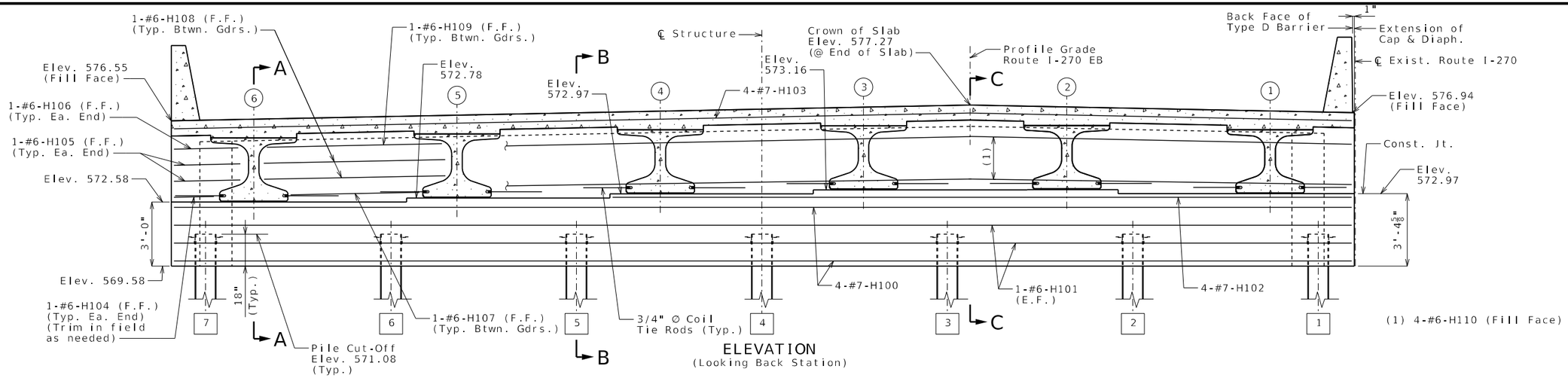

ELEVATION
(Looking Back Station)

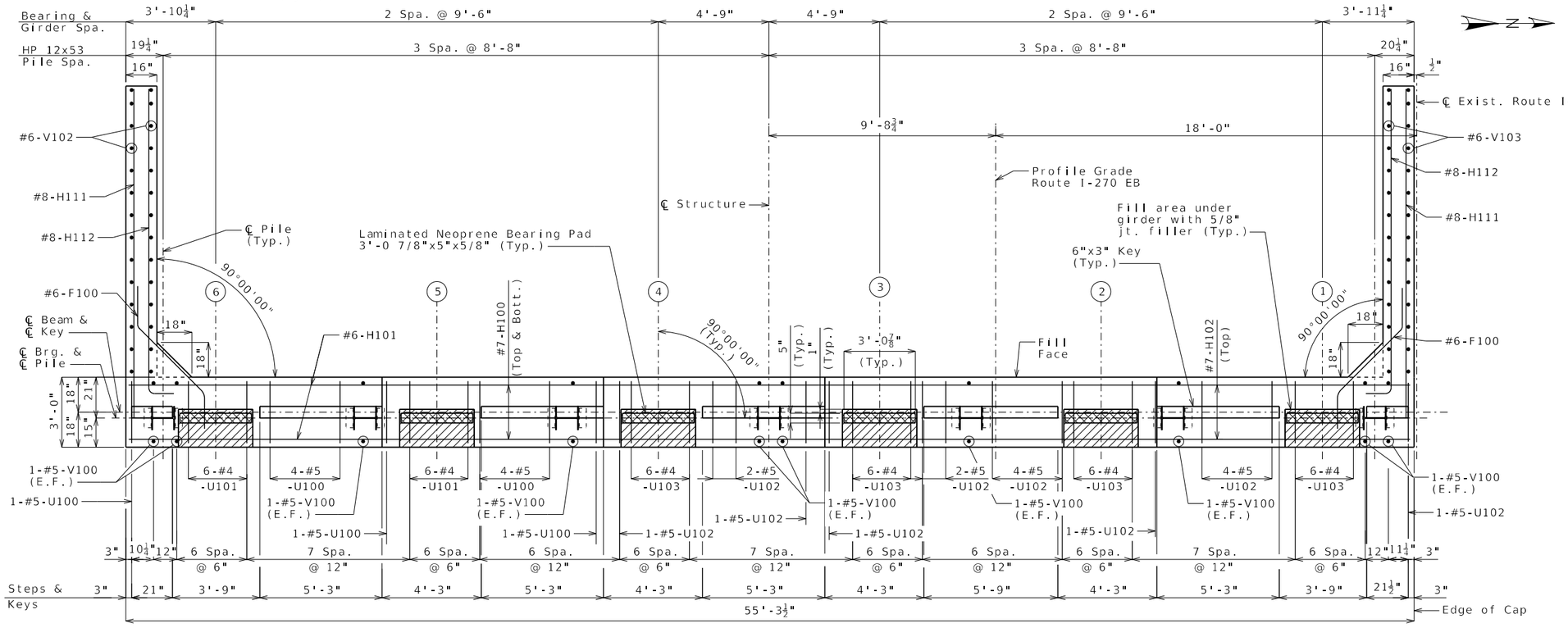

PLAN OF BEAM
(Horizontal dimensions are measured along ℄ Piles and ℄ Brg.)

Substructure Quantity Table for End Bent No. 1		
Item		Quantity
Galvanized Structural Steel Piles (12 in.)	linear foot	497
Pile Point Reinforcement	each	7
Class B Concrete (Substructure)	cu. yard	24.8
Pipe Pile Spacers	each	7

These quantities are included in the Estimated Quantities table on Sheet No. 2.

Detailed September 2025
Checked September 2025

Notes:

Work this sheet with Sheets No. 9 & 10.

For Sections A-A thru C-C, see Sheet No. 9.

For Key Details, Pile Anchor Details and Steel Pile Splice Detail, see Sheet No. 10.

For location of coil tie rods, see Sheets No. 18 & 19.

Notes (Cont.):

Reinforcing steel shall be shifted to clear piles. U-bars shall clear piles by at least 1 1/2 inches.

Strands at ends of girders shall be field bent or, if necessary, cut in field to maintain 1 1/2-inch minimium clearance to fill face of end bent.

All concrete in the end bent above top of beam and below top of slab shall be Class B-2.

Notes (Cont.):

#6-F100 bars shall be bent in field to clear girders.

For details and reinforcement of barriers at end bent, see Sheet No. 29.

E.F. Denotes Each Face.

F.F. Denotes Front Face.

(1) - Denotes girder number.

[1] - Denotes pile number.

END BENT NO. 1 DETAILS

Note: This drawing is not to scale. Follow dimensions.

Sheet No. 8 of 40

STATE OF MISSOURI
RYAN DAVID SHAW
NUMBER PE-2011000866
PROFESSIONAL ENGINEER
THIS SHEET HAS BEEN SIGNED, SEALED AND DATED ELECTRONICALLY

DATE PREPARED
4/1/2026

ROUTE	STATE
I-270	MO
DISTRICT	SHEET NO.
BR	8

COUNTY
ST. LOUIS

JOB NO.
JSL0021

CONTRACT ID.

PROJECT NO.

BRIDGE NO.
A9489

DESCRIPTION

DATE

MISSOURI HIGHWAYS AND TRANSPORTATION COMMISSION
105 WEST CAPITOL
JEFFERSON CITY, MO 65102
1-888-ASK-MODOT (1-888-275-6636)

HDR Engineering, Inc.
1001 Highlands Plaza Drive
Suite 200
St. Louis, MO 63110
314-425-8300
Certificate of Authority: 000856

c:\pwworking\central01\d4975494\B_A9489_008_SL0021.dgn 1:36:56 PM 4/1/2026

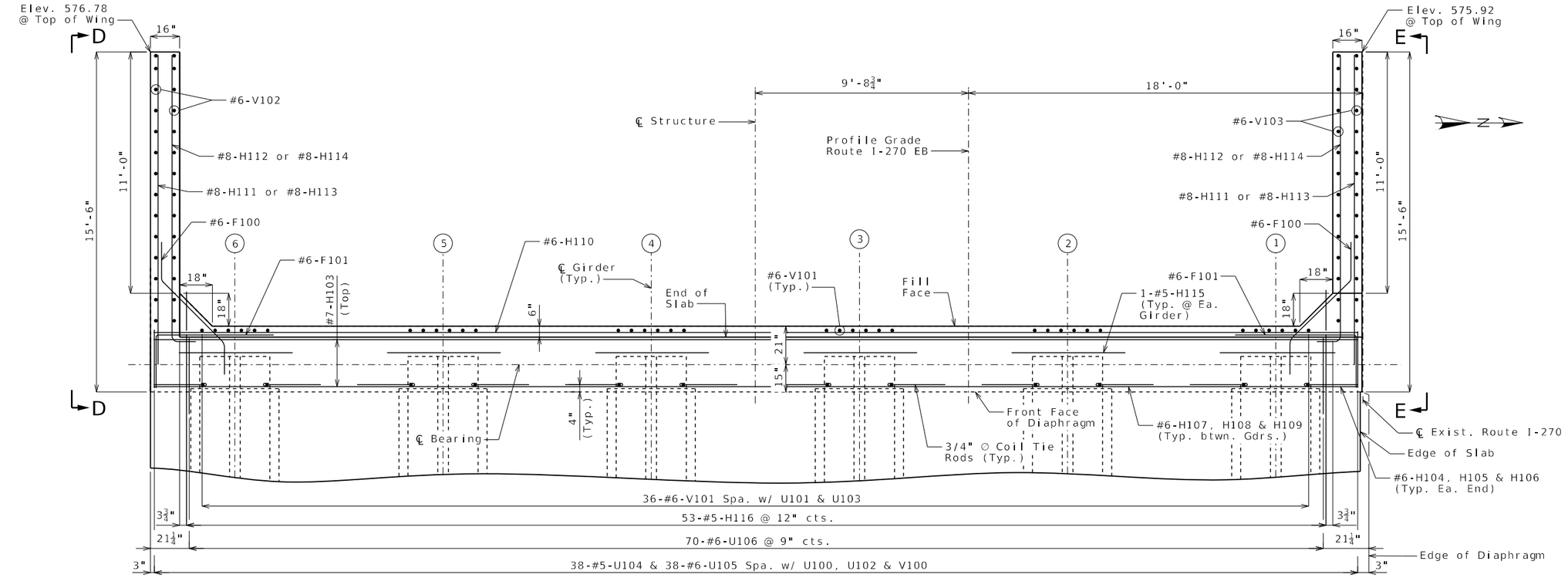

PART PLAN

(Horizontal dimensions are measured along ℄ Brg.)

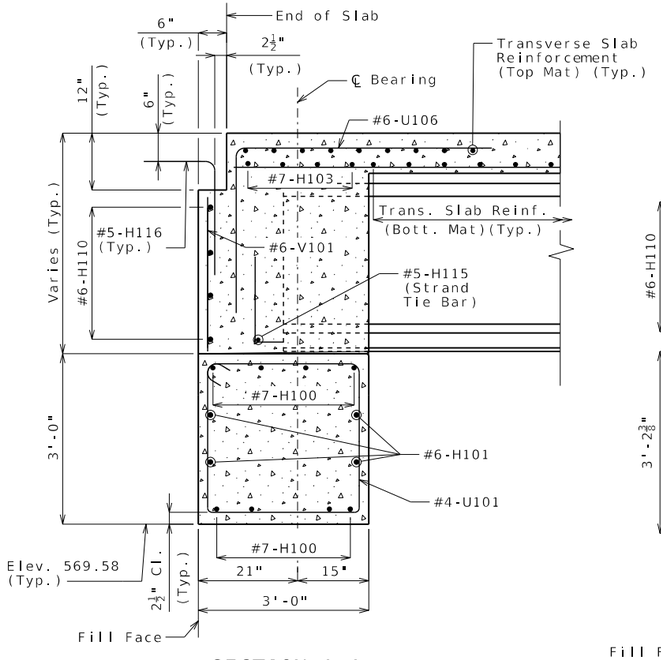

SECTION A-A

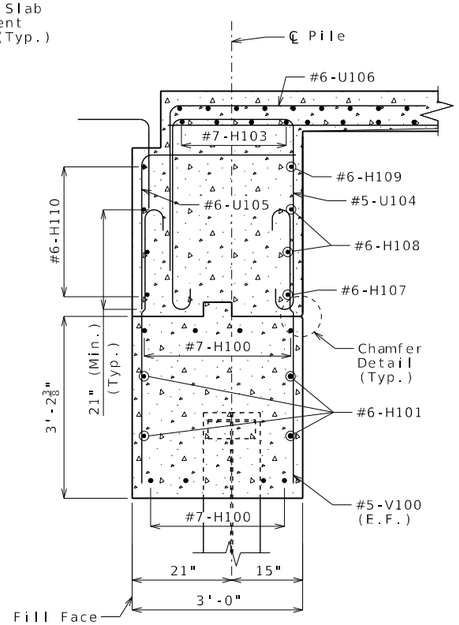

SECTION B-B

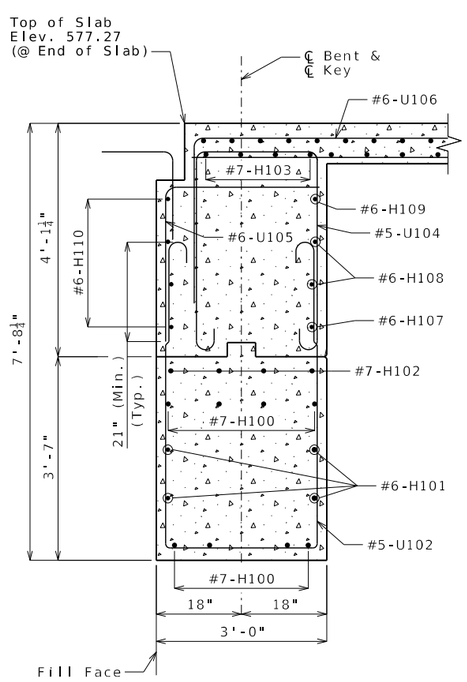

SECTION C-C

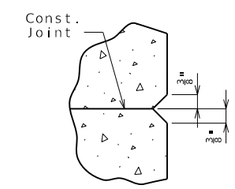

CHAMFER DETAIL

Notes:

Work this sheet with Sheets No. 8 & 10.

#6-F100 bars shall be bent in the field to clear girders.

For location of Sections A-A thru C-C, see Sheet No. 8.

For Elevations D-D and E-E, see Sheet No. 10.

For Key details, Pile Anchor details and Pile Splice details, see Sheet No. 10.

For location of coil tie rods and #5-H115 (strand tie bar), see Sheets No. 18 & 19.

For details and reinforcement of barriers at end bent, see Sheet No. 29.

E.F. Denotes Each Face.

(1) - Denotes girder number.

END BENT NO. 1 DETAILS

Detailed September 2025
Checked September 2025

Note: This drawing is not to scale. Follow dimensions.

STATE OF MISSOURI
RYAN DAVID SHAW
NUMBER PE-2017000366
PROFESSIONAL ENGINEER
THIS SHEET HAS BEEN SIGNED, SEALED AND DATED ELECTRONICALLY

DATE PREPARED	4/1/2026
ROUTE	I-270
STATE	MO
DISTRICT	BR
SHEET NO.	9
COUNTY	ST. LOUIS
JOB NO.	JSL0021
CONTRACT ID.	
PROJECT NO.	
BRIDGE NO.	A9489

DESCRIPTION

DATE

MISSOURI HIGHWAYS AND TRANSPORTATION COMMISSION

MoDOT

105 WEST CAPITOL
JEFFERSON CITY, MO 65102
1-888-ASK-MODOT (1-888-275-6636)

HDR Engineering, Inc.
1001 Highlands Plaza Drive
Suite 200
St. Louis, MO 63110
314-425-8300
Certificate of Authority: 000856

c:\pwworking\central01\d4975494\B_A9489_009_SL0021.dgn 1:37:04 PM 4/1/2026

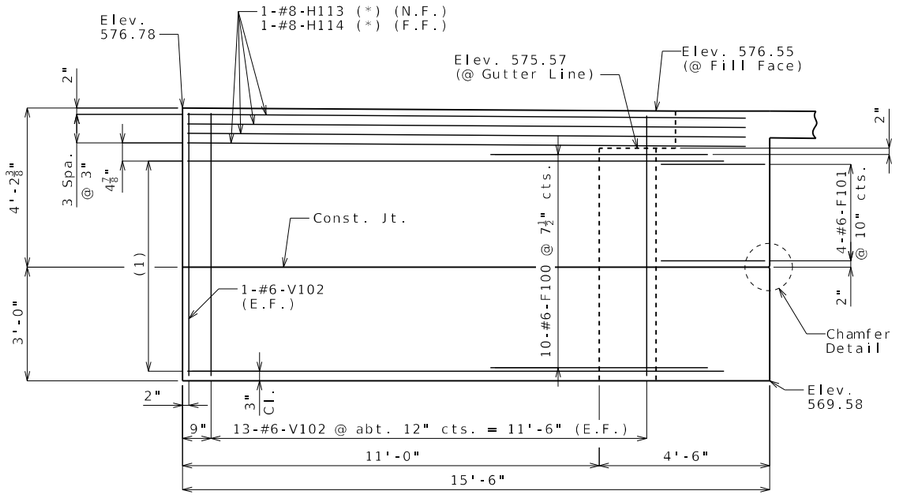

ELEVATION D-D

(1) 10-#8-H111 N.F. @ 7 1/2" cts.
10-#8-H112 F.F. @ 7 1/2" cts.

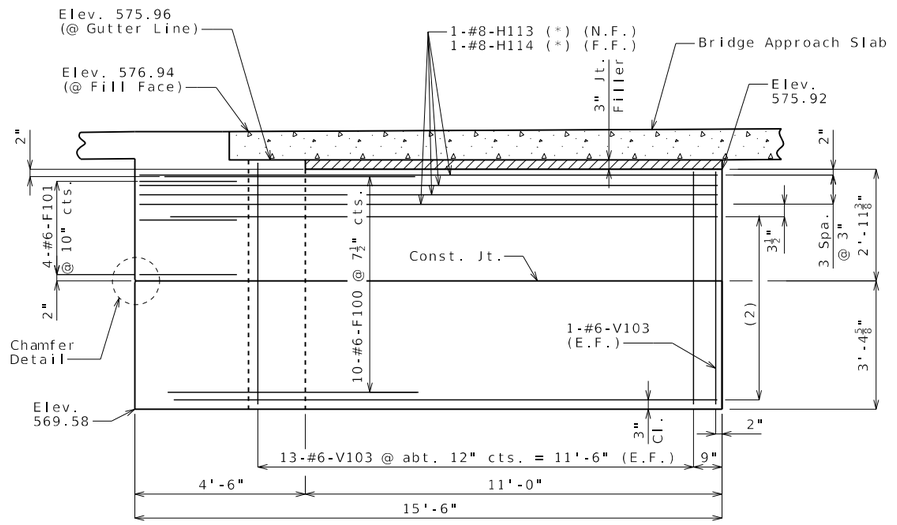

ELEVATION E-E

(2) 10-#8-H111 N.F. @ 6 1/2" cts.
10-#8-H112 F.F. @ 6 1/2" cts.

Note:

All dimensions and elevations given at outside face of wing unless otherwise noted.

The #6-F100 bars shall be bent in the field to clear girders.

(*) Place with grade

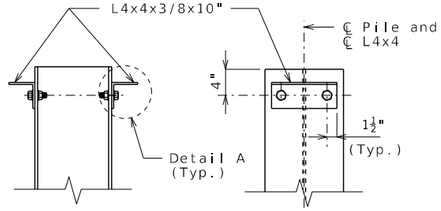

DETAILS OF HP PILE ANCHORS

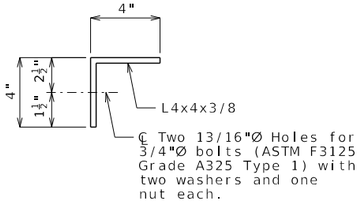

DETAIL A

Angles shall be coated with a minimum of two coats of non-aluminum epoxy mastic primer to provide a dry film thickness of 4 mils minimum, 8 mils maximum, or galvanized in accordance with Sec 1081. Bolts, washers and nuts shall be galvanized in accordance with AASHTO M 232 (ASTM A153), Class C.

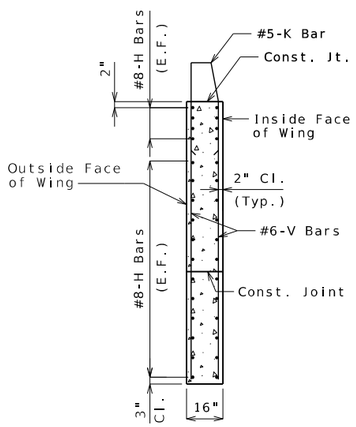

TYPICAL SECTION THRU RIGHT WING

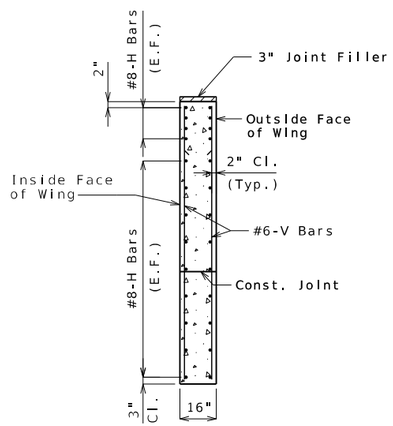

TYPICAL SECTION THRU LEFT WING

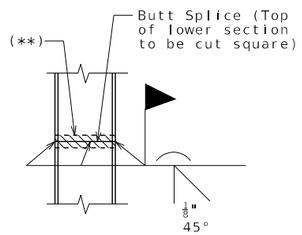

STEEL PILE SPLICE
(If required)

(**) Galvanizing material shall be omitted or removed one inch clear of weld locations in accordance with Sec 702.

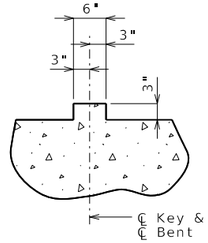

TYPICAL SECTION THRU KEY

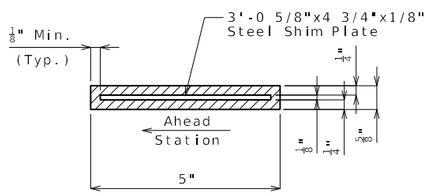

SECTION THRU LAMINATED NEOPRENE BEARING PAD

Notes:

Work this sheet with Sheets No. 8 & 9.

For Chamfer Detail, see Sheet No. 9.

Seal joint between vertical faces of end bent beams and diaphragms of Bridge No. A9489 with the vertical faces of Bridge No. A9490. Preformed compression joint seal shall be in accordance with Sec 717. Payment will be considered covered by the contract unit price for other items included in the contract.

For Modified Type D Barrier (Left) at Approach Slabs, see Sheet No. 30.

For location of Elevations D-D and E-E, see Sheet No. 9.

For details and reinforcement of barriers at end bent, see Sheet No. 29.

E.F. Denotes Each Face.

F.F. Denotes Far Face.

N.F. Denotes Near Face.

END BENT NO. 1 DETAILS

Detailed September 2025
Checked September 2025

Note: This drawing is not to scale. Follow dimensions.

STATE OF MISSOURI
RYAN DAVID SHAW
NUMBER PE-2011000886
PROFESSIONAL ENGINEER
THIS SHEET HAS BEEN SIGNED, SEALED AND DATED ELECTRONICALLY

DATE PREPARED: 4/1/2026
ROUTE: I-270 | STATE: MO
DISTRICT: BR | SHEET NO.: 10
COUNTY: ST. LOUIS
JOB NO.: JSL0021
CONTRACT ID.:
PROJECT NO.:
BRIDGE NO.: A9489

DESCRIPTION | DATE

MISSOURI HIGHWAYS AND TRANSPORTATION COMMISSION
105 WEST CAPITOL
JEFFERSON CITY, MO 65102
1-888-ASK-MODOT (1-888-275-6636)

HDR Engineering, Inc.
1001 Highlands Plaza Drive
Suite 200
St. Louis, MO 63110
314-425-8300
Certificate of Authority: 000856

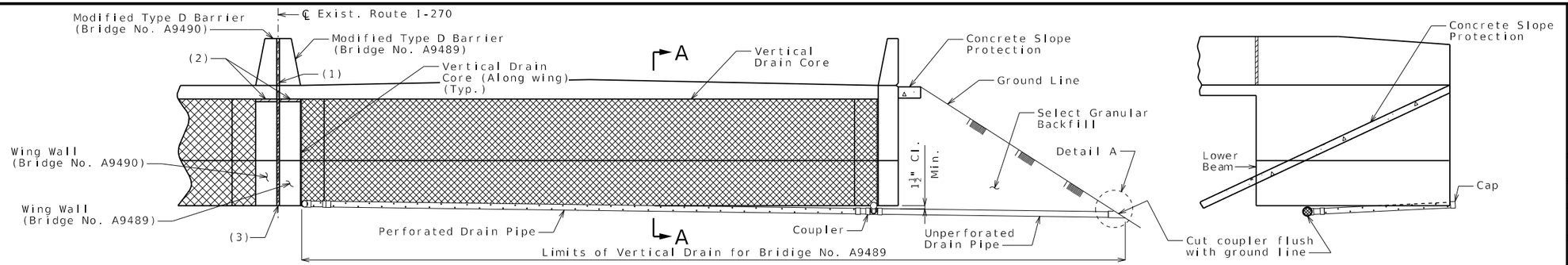

ELEVATION OF END BENT
(Looking Ahead Station)

ELEVATION OF EXTERIOR WING

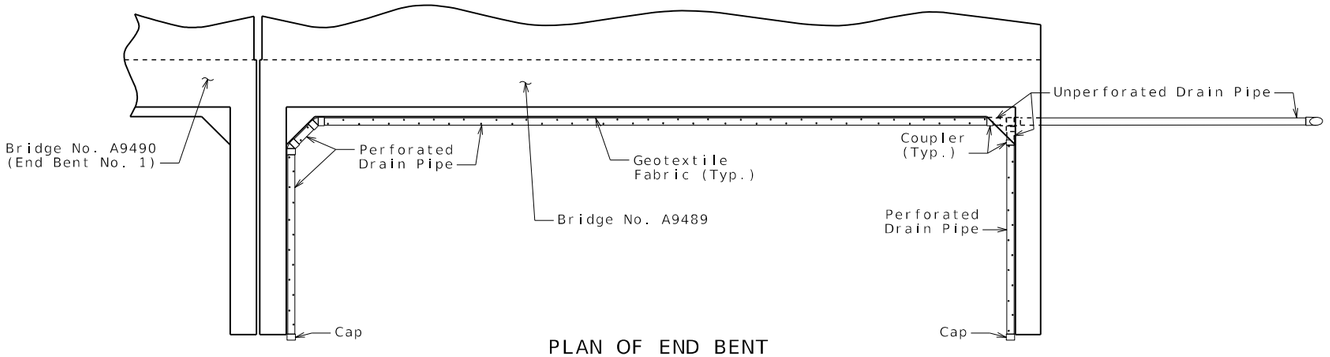

PLAN OF END BENT

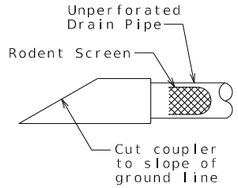

DETAIL A

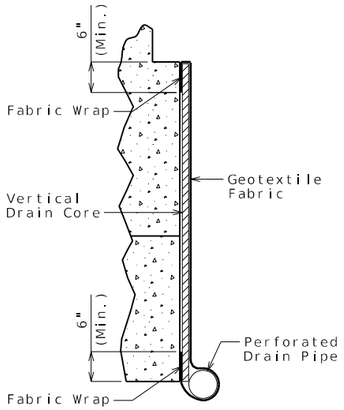

PART SECTION A-A
(Section thru wing similar)

(1) Place joint filler (varying thickness) between Bridges No. A9489 and A9490 Modified Type D Barriers.

(2) 3" joint filler between top of wing wall and bottom of bridge approach slab.

(3) 1" joint filler between Bridges No. A9489 and A9490 wing walls.

General Notes:

All drain pipe shall be sloped 1 to 2 percent.

Drain pipe may be either 6-inch diameter corrugated metallic-coated steel pipe underdrain, 4-inch diameter corrugated polyvinyl chloride (PVC) drain pipe, or 4-inch diameter corrugated polyethylene (PE) drain pipe.

Drain pipe shall be placed at fill face of end bent and inside face of wings. The pipe shall slope to lowest grade of ground line, also missing the lower beam of end bent by a minimum of 1 1/2 inches.

Perforated pipe shall be placed at fill face side and inside face of wings at the bottom of end bent and plain pipe shall be used where the vertical drain ends to the exit at ground line.

Seal joint between vertical faces of end bent beams and diaphragms of Bridge No. A9489 with the vertical faces of Bridge No. A9490. Preformed compression joint seal shall be in accordance with Sec 717. Payment will be considered covered by the contract unit price for other items included in the contract.

For End Bent No. 1 Details, see Sheets No. 8 thru 10.

For End Bent No. 4 Details, see Sheets No. 14 thru 16.

For Modified Type D Barrier (Left) at Approach Slabs, see Sheet No. 30.

VERTICAL DRAIN AT END BENTS
(Squared end bent shown, skewed end bent similar)

Detailed September 2025
Checked September 2025

Note: This drawing is not to scale. Follow dimensions.

RYAN DAVID SHAW
NUMBER PE-2011000286
PROFESSIONAL ENGINEER
STATE OF MISSOURI
THIS SHEET HAS BEEN SIGNED, SEALED AND DATED ELECTRONICALLY

DATE PREPARED 4/1/2026
ROUTE I-270 | STATE MO
DISTRICT BR | SHEET NO. 11
COUNTY ST. LOUIS
JOB NO. JSL0021
CONTRACT ID.
PROJECT NO.
BRIDGE NO. A9489

DESCRIPTION | DATE

MISSOURI HIGHWAYS AND TRANSPORTATION COMMISSION
105 WEST CAPITOL
JEFFERSON CITY, MO 65102
1-888-ASK-MODOT (1-888-275-6636)
HDR Engineering, Inc.
1001 Highlands Plaza Drive
Suite 200
St. Louis, MO 63110
314-425-8300
Certificate of Authority: 000856

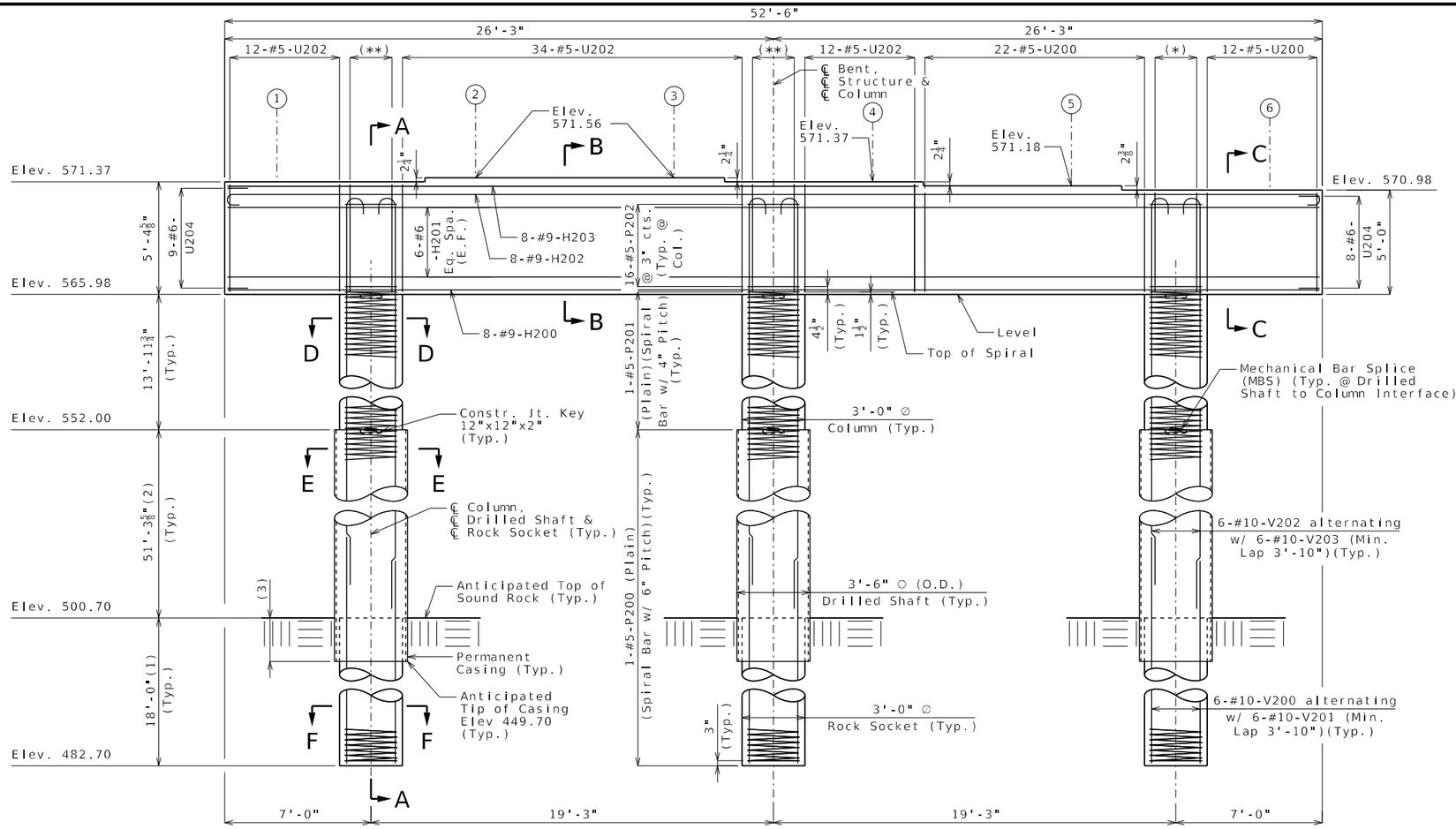

ELEVATION

(Beam keys not shown for clarity.)

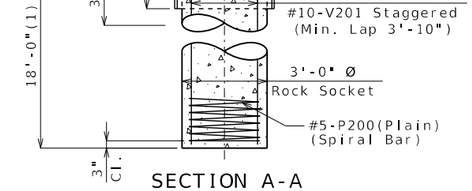

SECTION A-A

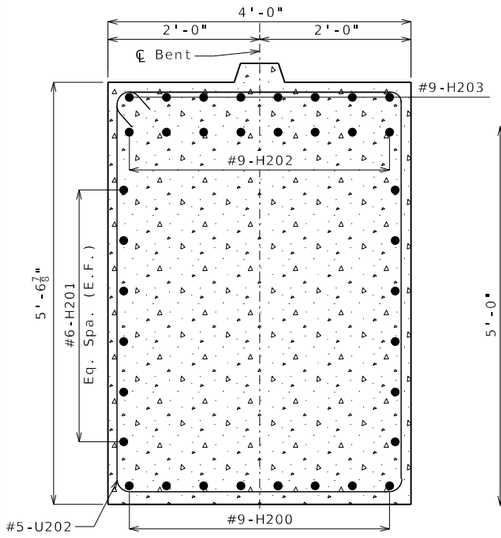

SECTION B-B

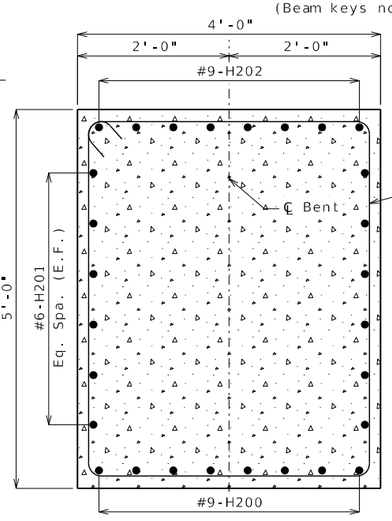

SECTION C-C

(*) 5-#5-U201

(**) 5-#5-U203

(1) Pay Item Rock Sockets (3 ft. 0 in. Dia.)

(2) Pay Item Drilled Shafts (3 ft. 6 in. Dia.)

(3) Set Steel Casing into sound rock in accordance with Sec 701 (Typ.)

(4) Lapping of spiral and vertical reinforcement is not allowed in this zone.

(5) Lap splices and mechanical bar splices, if used, are to be alternately staggered at least 2'-0" at two different locations.

Substructure Quantity Table for Intermediate Bent No. 2

Item		Quantity
Drilled Shafts (3 ft. 6 in. Dia.)	linear foot	154
Rock Sockets (3 ft. 0 in. Dia.)	linear foot	54
Video Camera Inspection	each	3
Foundation Inspection Holes	linear foot	84
Sonic Logging Testing	each	3
Class B Concrete (Substructure)	cu. yard	52.6
Reinforcing Steel (Galvanized)	pound	27,770

These quantities are included in the Estimated Quantities table on Sheet No. 2.
All reinforcement in drilled shafts and rock sockets is included in the substructure quantities.
The cost of any required excavation to the top of the drilled shafts will be considered completely covered by the contract unit price for other items.

Notes:

The hooks of vertical bars embedded in the beam cap shall not be turned outward, away from the column core.

Work this sheet with Sheet No. 13.

Thickness of permanent steel casing shall be in accordance with Sec 701.

An additional 4 feet has been added to V-bar lengths and an additional 4 feet of height has been added to P200 and P201 length in the quantities, if required, for possible change in drilled shaft or rock socket length. The additional V-bar length shall be cut off or included in the reinforcement lap if not required. The additional P-bar length shall be cut off, with allowance for maintaining the required 1-1/2 turns at the end of spiral length. The spiral pitch shall be spaced similarly to that shown in elevation, if required, but not less than 6-inch centers in the drilled shaft and rock socket.

Sonic logging testing shall be performed on all drilled shafts and rock sockets.

E.F. Denotes Each Face.

(1) - Denotes Girder Number.

INTERMEDIATE BENT NO. 2 DETAILS

Detailed September 2025
Checked September 2025

Note: This drawing is not to scale. Follow dimensions.

STATE OF MISSOURI
RYAN DAVID SHAW
NUMBER PE-2011020886
PROFESSIONAL ENGINEER
THIS SHEET HAS BEEN SIGNED, SEALED AND DATED ELECTRONICALLY

DATE PREPARED 4/2/2026

ROUTE	STATE
I-270	MO
DISTRICT	SHEET NO.
BR	12

COUNTY ST. LOUIS

JOB NO. JSL0021

CONTRACT ID.

PROJECT NO.

BRIDGE NO. A9489

DESCRIPTION | DATE

MISSOURI HIGHWAYS AND TRANSPORTATION COMMISSION
105 WEST CAPITOL
JEFFERSON CITY, MO 65102
1-888-ASK-MODOT (1-888-275-6636)

HDR Engineering, Inc.
1001 Highlands Plaza Drive
Suite 200
St. Louis, MO 63110
314-425-8300
Certificate of Authority: 000856

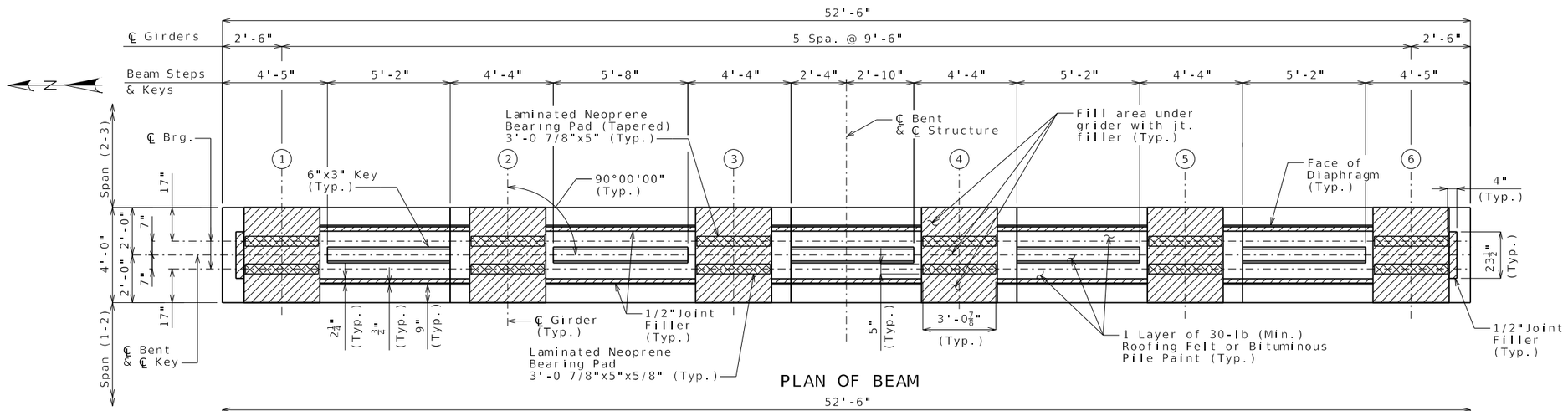

PLAN OF BEAM

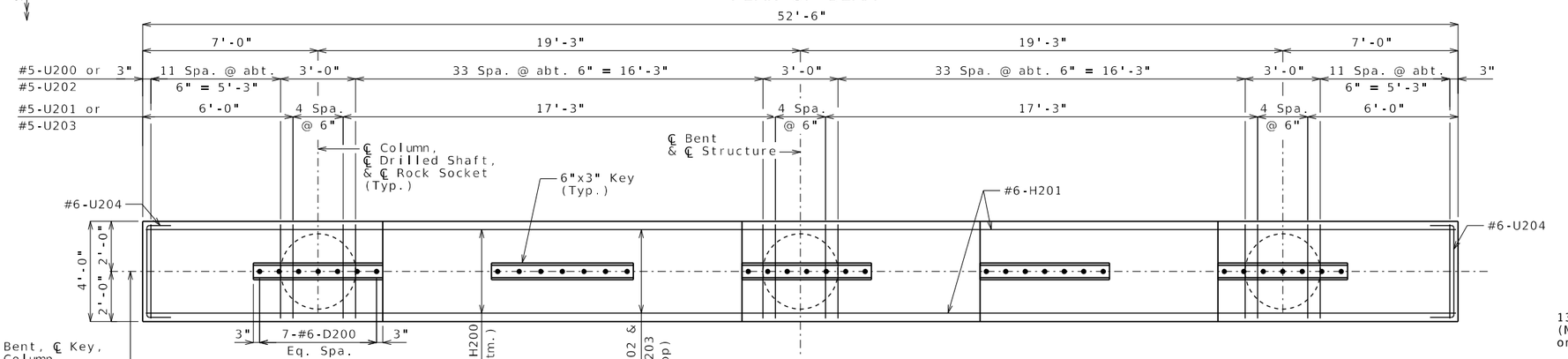

PLAN OF BEAM SHOWING REINFORCEMENT

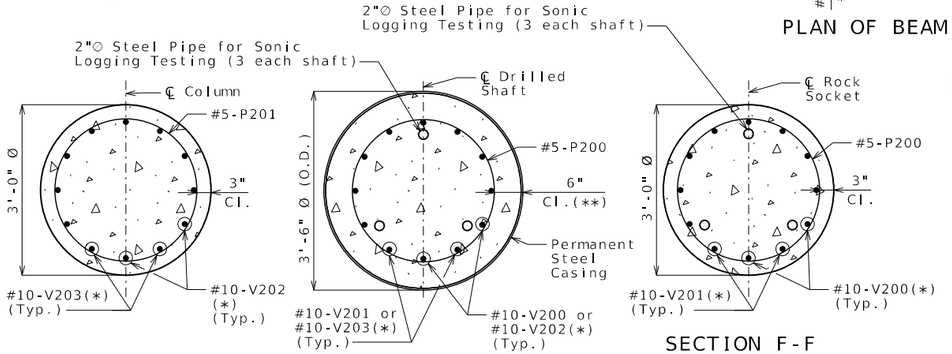

SECTION D-D

SECTION E-E

SECTION F-F

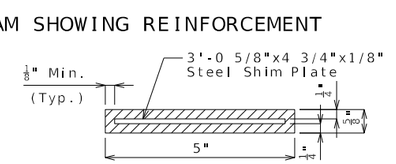

SECTION THRU LAMINATED NEOPRENE BEARING PAD (SPAN (1-2))

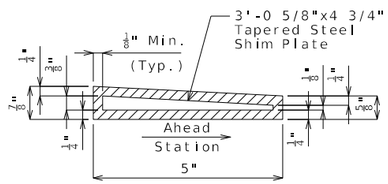

SECTION THRU LAMINATED NEOPRENE BEARING PAD (TAPERED)(SPAN (2-3))

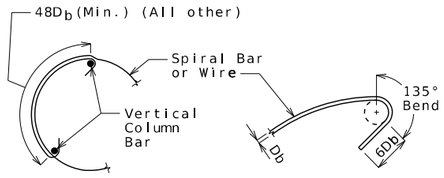

INTERMEDIATE SPLICE OF SPIRALS

Standard 135-degree tie hooks that engage vertical column reinforcing bars shall be provided at each end of splice.



SEISMIC STIRRUP BAR

Note: Seismic hoop hooks shall be staggered around the column at about one-third of the hoop circumference.

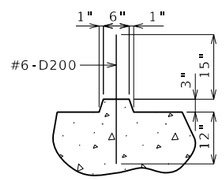

SECTION THRU KEY

(*) At Contractor's option, vertical column/drilled shaft bars may be spliced by MBS in the allowable splice zone. Splices shall be staggered a min. 2'-0" in an alternating pattern.

(**) To outside of casing.

Notes:

If contractor uses MBS for column and drilled shaft vertical reinforcement, contractor shall increase diameter of stirrup bars and seismic bars (spiral/hoop) as needed at the MBS locations. No additional payment will be made for this adjustment. Stirrup bars and seismic bars shall not be shifted to create large gaps to avoid MBS.

Work this sheet with Sheet No. 12.

For Diaphragm Details, see Sheet No. 22.

For steps of 2 inches or more, use 2 1/4 x 1/2 inch Joint Filler up vertical face.

(1) - Denotes girder number.

INTERMEDIATE BENT NO. 2 DETAILS

Detailed September 2025
Checked September 2025

Note: This drawing is not to scale. Follow dimensions.

STATE OF MISSOURI
RYAN DAVID SHAW
NUMBER PE-2011003886
PROFESSIONAL ENGINEER
THIS SHEET HAS BEEN SIGNED, SEALED AND DATED ELECTRONICALLY

DATE PREPARED 4/1/2026
ROUTE I-270
STATE MO
DISTRICT BR
SHEET NO. 13
COUNTY ST. LOUIS
JOB NO. JSL0021
CONTRACT ID.
PROJECT NO.
BRIDGE NO. A9489

DESCRIPTION
DATE

MISSOURI HIGHWAYS AND TRANSPORTATION COMMISSION
105 WEST CAPITOL
JEFFERSON CITY, MO 65102
1-888-ASK-MODOT (1-888-275-6636)

HDR Engineering, Inc.
1001 Highlands Plaza Drive
Suite 200
St. Louis, MO 63110
314-425-8300
Certificate of Authority: 000856

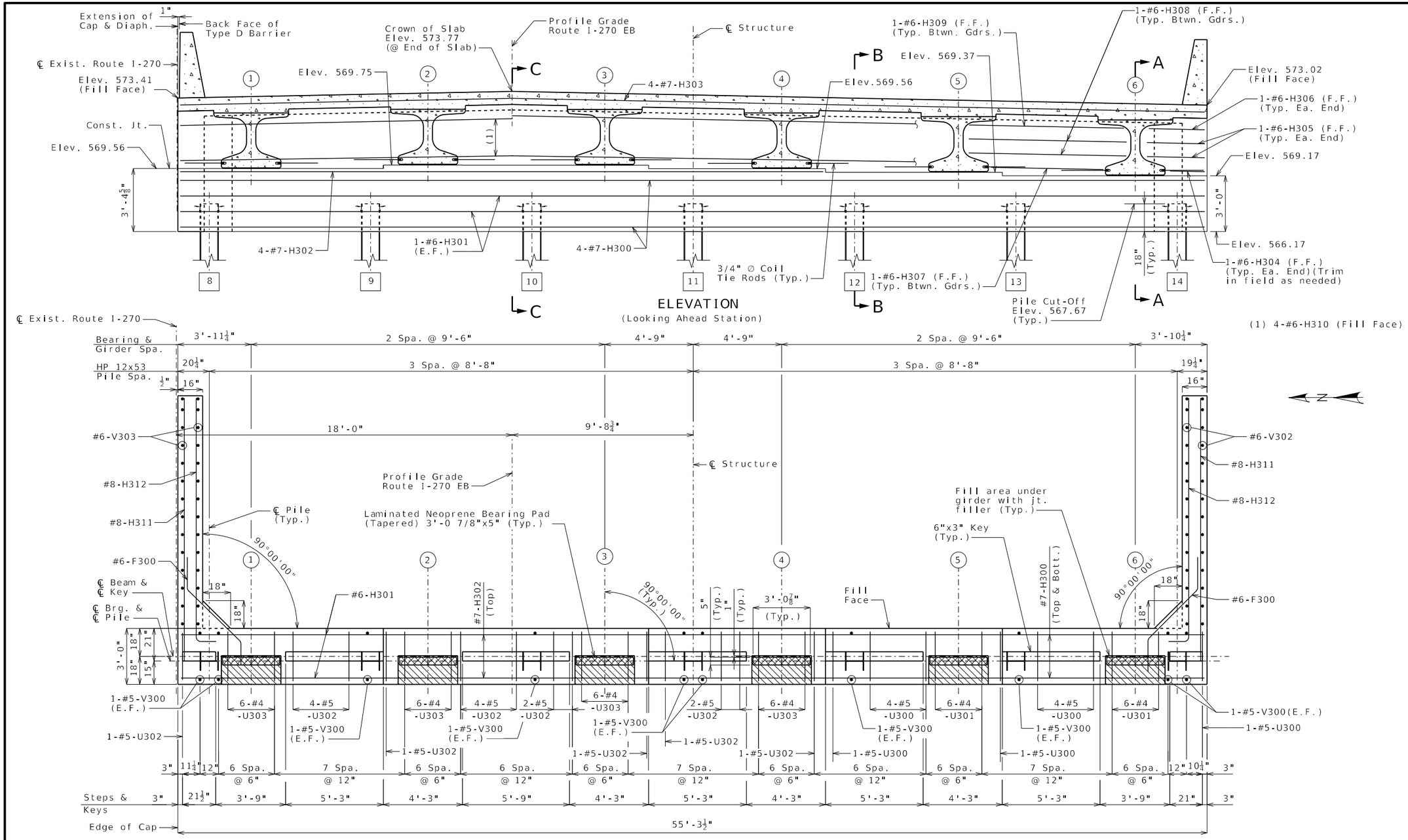

Substructure Quantity Table for End Bent No. 3		
Item		Quantity
Galvanized Structural Steel Piles (12 in.)	linear foot	504
Pile Point Reinforcement	each	7
Class B Concrete (Substructure)	cu. yard	24.8
Pipe Pile Spacers	each	7

These quantities are included in the Estimated Quantities table on Sheet No. 2.

Detailed September 2025
Checked September 2025

PLAN OF BEAM

(Horizontal dimensions are measured along ℄ Piles and ℄ Brg.)

Notes:

Work this sheet with Sheets No. 15 & 16.

For Sections A-A thru C-C, see Sheet No. 15.

For Key Details, Pile Anchor Details and Steel Pile Splice Detail, see Sheet No. 16.

END BENT NO. 3 DETAILS

Notes (Cont.):

For location of coil tie rods, see Sheets No. 20 & 21.

Reinforcing steel shall be shifted to clear piles. U-bars shall clear piles by at least 1 1/2 inches.

Strands at ends of girders shall be field bent or, if necessary, cut in field to maintain 1 1/2 inch minimum clearance to fill face of end bent.

All concrete in the end bent above top of beam and below top of slab shall be Class B-2.

Notes (Cont.):

#6-F300 bars shall be bent in field to clear girders.

For details and reinforcement of barriers at end bent, see Sheet No. 29.

E.F. Denotes Each Face.

F.F. Denotes Front Face.

(1) - Denotes girder number.

[1] - Denotes pile number.

Note: This drawing is not to scale. Follow dimensions.

Sheet No. 14 of 40

STATE OF MISSOURI
RYAN DAVID SHAW
NUMBER PE-2011020068
PROFESSIONAL ENGINEER
THIS SHEET HAS BEEN SIGNED, SEALED AND DATED ELECTRONICALLY

DATE PREPARED 4/1/2026

ROUTE	STATE
I-270	MO
DISTRICT	SHEET NO.
BR	14

COUNTY: ST. LOUIS
JOB NO.: JSL0021
CONTRACT ID.:
PROJECT NO.:
BRIDGE NO.: A9489

DESCRIPTION | DATE

MISSOURI HIGHWAYS AND TRANSPORTATION COMMISSION
105 WEST CAPITOL
JEFFERSON CITY, MO 65102
1-888-ASK-MODOT (1-888-275-6636)

HDR Engineering, Inc.
1001 Highlands Plaza Drive
Suite 200
St. Louis, MO 63110
314-425-8300
Certificate of Authority: 000856

c:\pwworking\central01\d4975494\B_A9489_014_SL0021.dgn 1:37:45 PM 4/1/2026

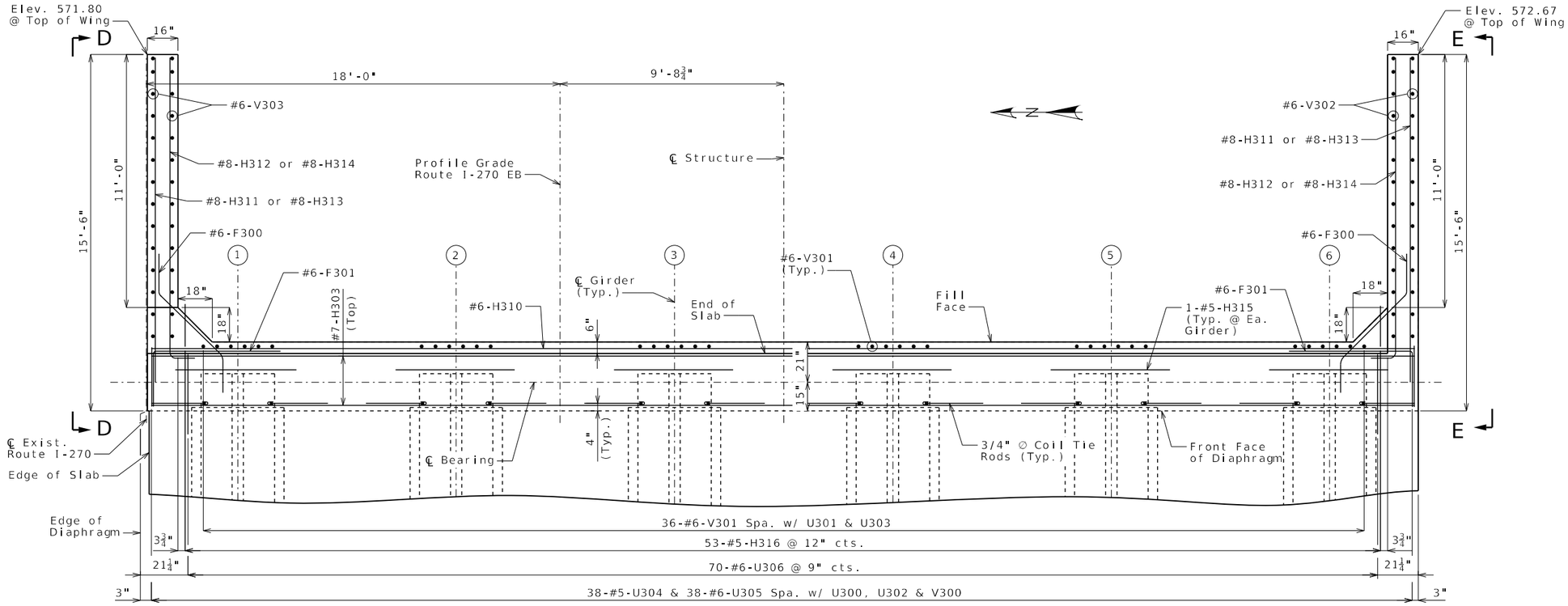

PART PLAN

(Horizontal dimensions are measured along ℄ Brg.)

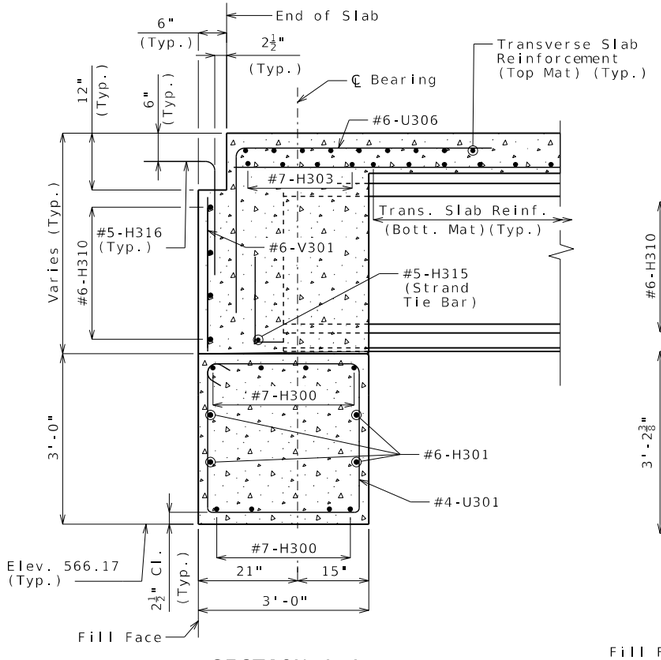

SECTION A-A

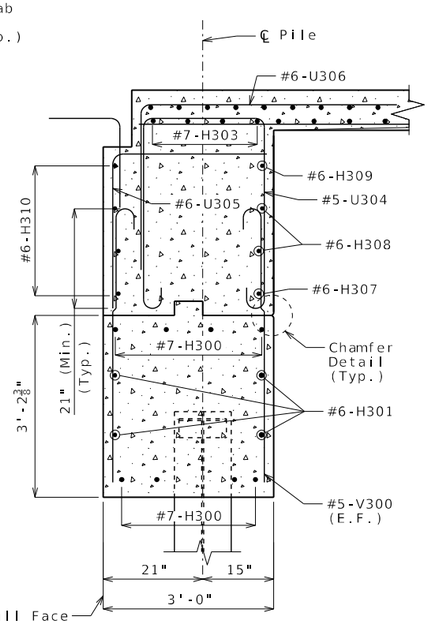

SECTION B-B

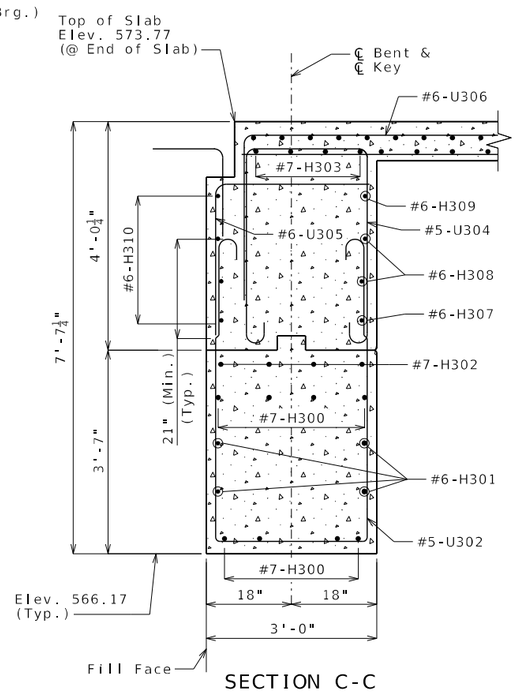

SECTION C-C

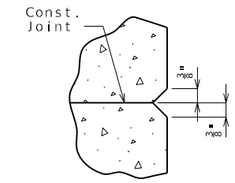

CHAMFER DETAIL

Notes:

Work this sheet with Sheets No. 14 & 16.

#6-F300 bars shall be bent in the field to clear girders.

For location of Sections A-A thru C-C, see Sheet No. 14.

For Elevations D-D and E-E, see Sheet No. 16.

For Key details, Pile Anchor details and Pile Splice details, see Sheet No. 16.

For location of coil tie rods and #5-H315 (strand tie bar), see Sheets No. 20 & 21.

For details and reinforcement of barriers at end bent, see Sheet No. 29.

E.F. Denotes Each Face.

(1) - Denotes girder number.

END BENT NO. 3 DETAILS

Detailed September 2025
Checked September 2025

Note: This drawing is not to scale. Follow dimensions.

STATE OF MISSOURI
RYAN DAVID SHAW
NUMBER PE-2017000366
PROFESSIONAL ENGINEER

THIS SHEET HAS BEEN SIGNED, SEALED AND DATED ELECTRONICALLY

DATE PREPARED	4/1/2026
ROUTE	I-270
STATE	MO
DISTRICT	BR
SHEET NO.	15
COUNTY	ST. LOUIS
JOB NO.	JSL0021
CONTRACT ID.	
PROJECT NO.	
BRIDGE NO.	A9489

DESCRIPTION

DATE

MISSOURI HIGHWAYS AND TRANSPORTATION COMMISSION

MoDOT

105 WEST CAPITOL
JEFFERSON CITY, MO 65102
1-888-ASK-MODOT (1-888-275-6636)

HDR Engineering, Inc.
1001 Highlands Plaza Drive
Suite 200
St. Louis, MO 63110
314-425-8300
Certificate of Authority: 000856

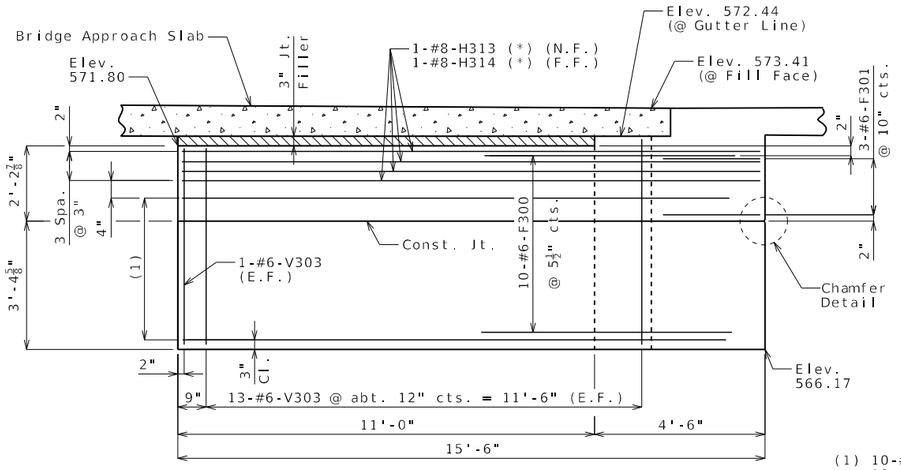

ELEVATION D-D

(1) 10-#8-H311 N.F. @ 5 1/2" cts.
10-#8-H312 F.F. @ 5 1/2" cts.

(2) 10-#8-H311 N.F. @ 6 1/2" cts.
10-#8-H312 F.F. @ 6 1/2" cts.

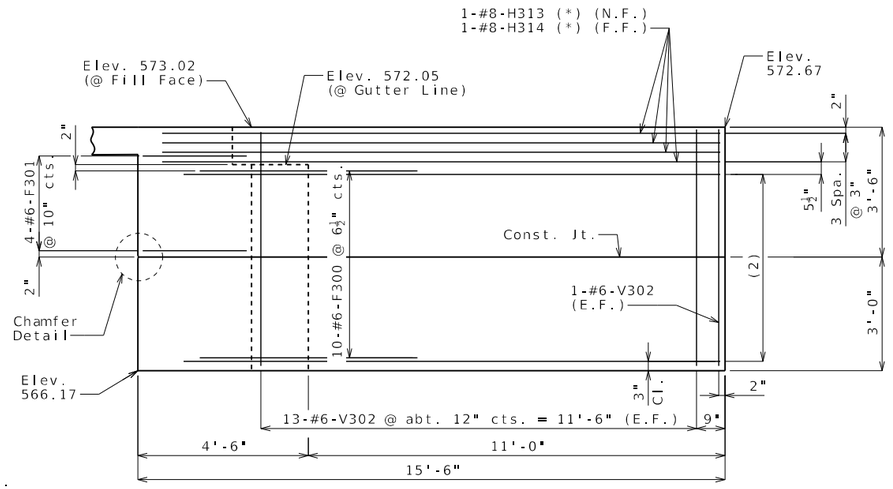

ELEVATION E-E

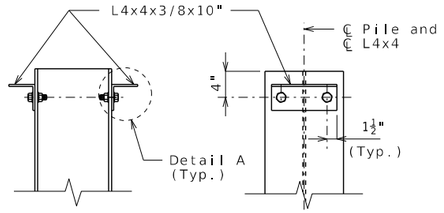

DETAILS OF HP PILE ANCHORS

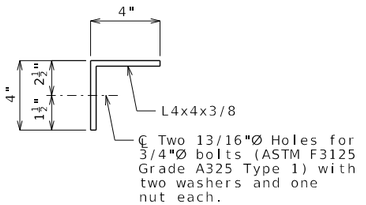

DETAIL A

Angles shall be coated with a minimum of two coats of non-aluminum epoxy mastic primer to provide a dry film thickness of 4 mils minimum, 8 mils maximum, or galvanized in accordance with Sec 1081. Bolts, washers and nuts shall be galvanized in accordance with AASHTO M 232 (ASTM A153), Class C.

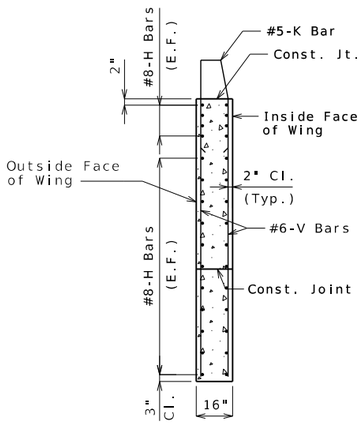

TYPICAL SECTION THRU RIGHT WING

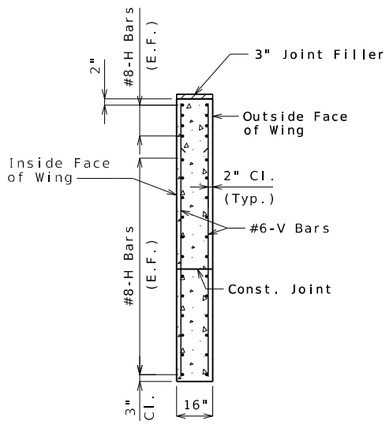

TYPICAL SECTION THRU LEFT WING

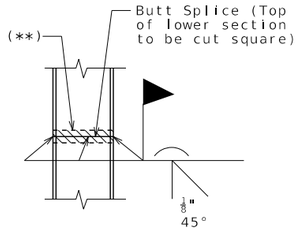

STEEL PILE SPLICE
(If required)

(**) Galvanizing material shall be omitted or removed one inch clear of weld locations in accordance with Sec 702.

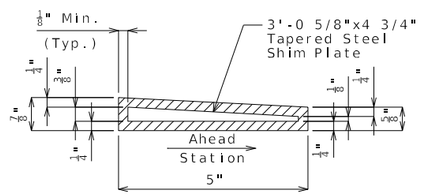

SECTION THRU LAMINATED NEOPRENE BEARING PAD (TAPERED)

Note:

All dimensions and elevations given at outside face of wing unless otherwise noted.

The #6-F300 bars shall be bent in the field to clear girders.

(*) Place with grade

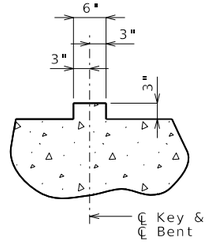

TYPICAL SECTION THRU KEY

Notes:

Work this sheet with Sheets No. 14 & 15.

For Chamfer Detail, see Sheet No. 15.

Seal joint between vertical faces of end bent beams and diaphragms of Bridge No. A9489 with the vertical faces of Bridge No. A9490. Preformed compression joint seal shall be in accordance with Sec 717. Payment will be considered covered by the contract unit price for other items included in the contract.

For Modified Type D Barrier (Left) at Approach Slabs, see Sheet No. 30.

For location of Elevations D-D and E-E, see Sheet No. 15.

For details and reinforcement of barriers at end bent, see Sheet No. 29.

E.F. Denotes Each Face.

F.F. Denotes Far Face.

N.F. Denotes Near Face.

END BENT NO. 3 DETAILS

Detailed September 2025
Checked September 2025

Note: This drawing is not to scale. Follow dimensions.

STATE OF MISSOURI
RYAN DAVID SHAW
NUMBER PE-2011020886
PROFESSIONAL ENGINEER
THIS SHEET HAS BEEN SIGNED, SEALED AND DATED ELECTRONICALLY

DATE PREPARED 4/1/2026

ROUTE	STATE
I-270	MO
DISTRICT	SHEET NO.
BR	16

COUNTY: ST. LOUIS
JOB NO.: JSL0021
CONTRACT ID.:
PROJECT NO.:
BRIDGE NO.: A9489

DESCRIPTION | DATE

MISSOURI HIGHWAYS AND TRANSPORTATION COMMISSION
105 WEST CAPITOL
JEFFERSON CITY, MO 65102
1-888-ASK-MODOT (1-888-275-6636)

HDR Engineering, Inc.
1001 Highlands Plaza Drive
Suite 200
St. Louis, MO 63110
314-425-8300
Certificate of Authority: 000856

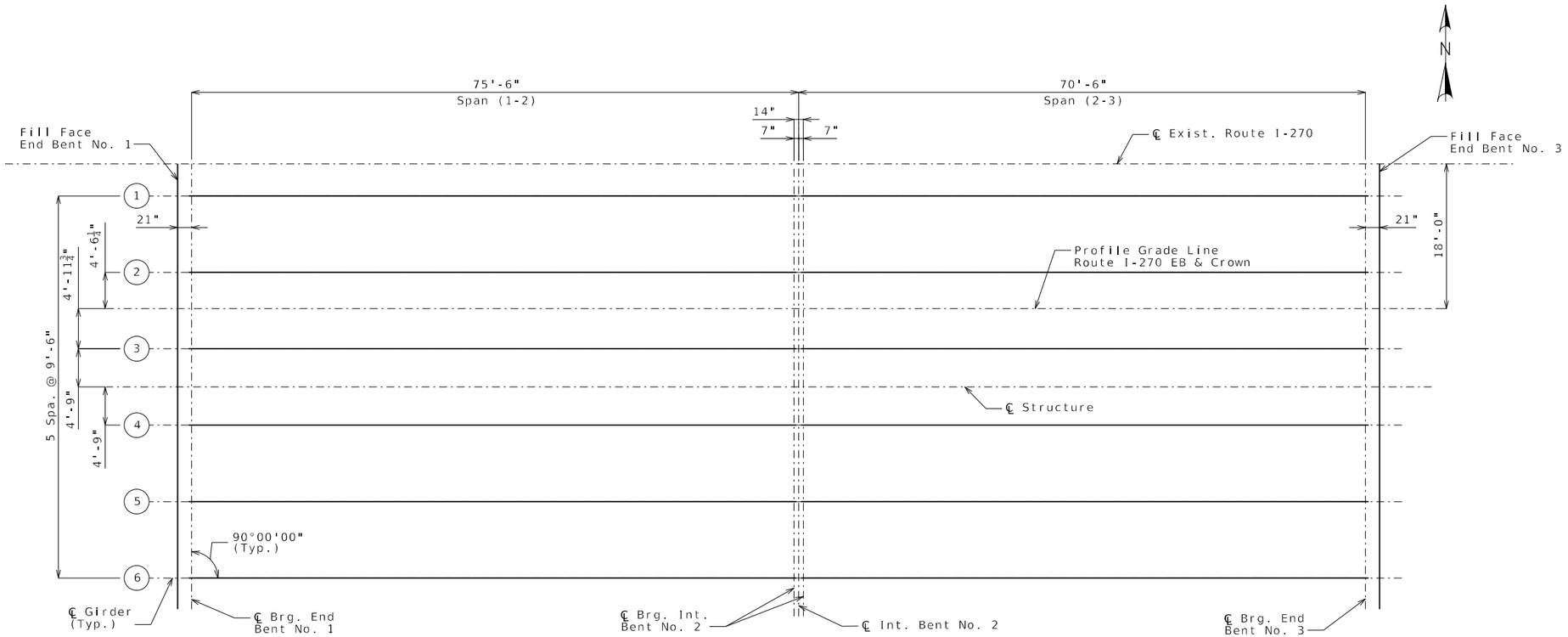

PLAN SHOWING PRESTRESSED CONCRETE NU-GIRDER LAYOUT

Notes:

All longitudinal dimensions are measured horizontal.

All girders are parallel.

(1) - Denotes girder number.

GIRDER LAYOUT

Detailed September 2025
Checked September 2025

Note: This drawing is not to scale. Follow dimensions.

STATE OF MISSOURI
RYAN DAVID SHAW
NUMBER PE-2017000366
PROFESSIONAL ENGINEER

THIS SHEET HAS BEEN SIGNED, SEALED AND DATED ELECTRONICALLY

DATE PREPARED	4/1/2026
ROUTE	I-270
STATE	MO
DISTRICT	BR
SHEET NO.	17
COUNTY	ST. LOUIS
JOB NO.	JSL0021
CONTRACT ID.	
PROJECT NO.	
BRIDGE NO.	A9489

DATE	DESCRIPTION

MISSOURI HIGHWAYS AND TRANSPORTATION COMMISSION

MoDOT

105 WEST CAPITOL
JEFFERSON CITY, MO 65102
1-888-ASK-MODOT (1-888-275-6636)

HDR Engineering, Inc.
1001 Highlands Plaza Drive
Suite 200
St. Louis, MO 63110
314-425-8300
Certificate of Authority: 000856

(1) Fabricator shall apply a bond breaker to this region.

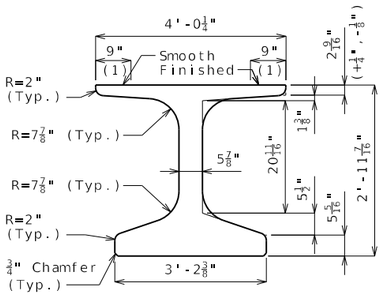

DIMENSIONS

(2) Outer strands tensioned to 2.02 kips/strand and inner strands to 8 kips/strand. Placed symmetrical about ℄ Girder. May be moved laterally in pairs.

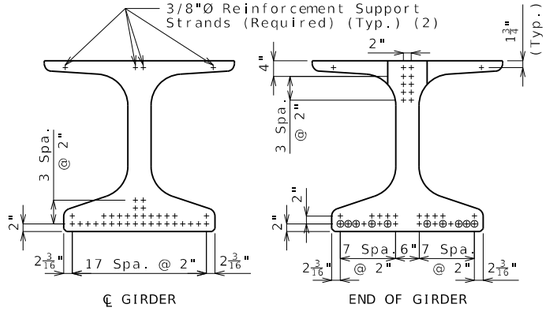

STRAND ARRANGEMENT

\+ Indicates prestressing strand.

o Indicates cut & shop bend with 3'-0" projection.

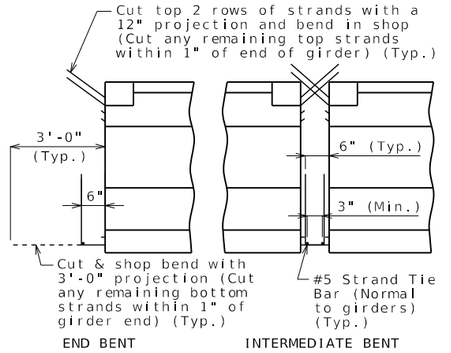

STRANDS AT GIRDER ENDS

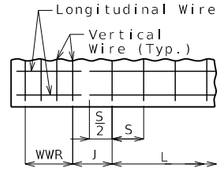

WELDED WIRE PLACEMENT

S = Vertical wire spacing

L = Length of WWR mats

J = Distance between WWR mats

Bill of Reinforcing Steel

Bars Each Girder				
No.	Size/Mark		Length	Shape
96	3	G1	2'-10"	8
2	4	G3	3'-10"	20
2	4	G4	2'-3"	20
2	4	G5	2'-8"	20

Welded Wire Each Girder					
Mark	Size	S	W	L	J
WWR1	D31	4"	W12	8'-4"	8"
WWR2	D31	8"	W12	10'-0"	5¼"
WWR3	D31	12"	W12	33'-0"	--
WWR6	D31	2"	W12	16"	4"

Bending Diagrams

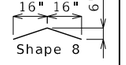

Shape 20

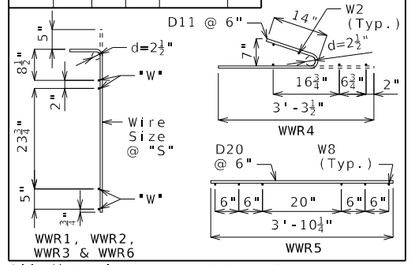

All dimensions are out to out.

Hooks and bends shall be in accordance with the CRSI Manual of Standard Practice for Detailing Reinforced Concrete Structures, Stirrup and Tie Dimensions.

Actual bar lengths are measured along centerline of bar to the nearest inch.

Minimum clearance to reinforcing shall be 1", unless otherwise shown.

All bar reinforcement shall be ASTM A706 Grade 60.

WWR shall not be epoxy coated.

G4 and G5 not required for interior girders. Half no. of G3, G4 and G5 not required for ext. girders of end spans.

General Notes:

Concrete for prestressed beams shall be Class A-1 with f'c = 8000 psi and f'ci = 6500 psi.

Use 34 strands, 0.6"Ø Grade 270, with an initial prestress force of 1494 kips.

Pretensioned members shall be in accordance with Sec 1029.

Fabricator shall be responsible for location and design of lifting devices.

Exterior and interior girders are the same except: coil ties and top flange blockout.

The contractor shall provide bracing necessary for lateral and torsional stability of the girders during construction of the concrete slab and remove the bracing after the slab has attained 75% design strength. Contractor shall not drill holes in the girders.

For Girder Camber Diagram, see Sheet No. 23.

For location of coil ties at concrete diaphragms and integral bents, see Sheets No. 8, 9 & 22.

Alternate bar reinforcing steel details are provided and may be used. The same type of reinforcing steel shall be used for all girders in all spans.

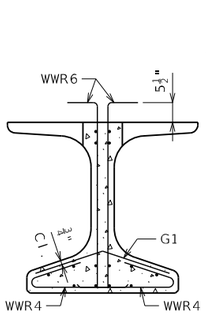

SECTION A-A

Strands not shown for clarity.

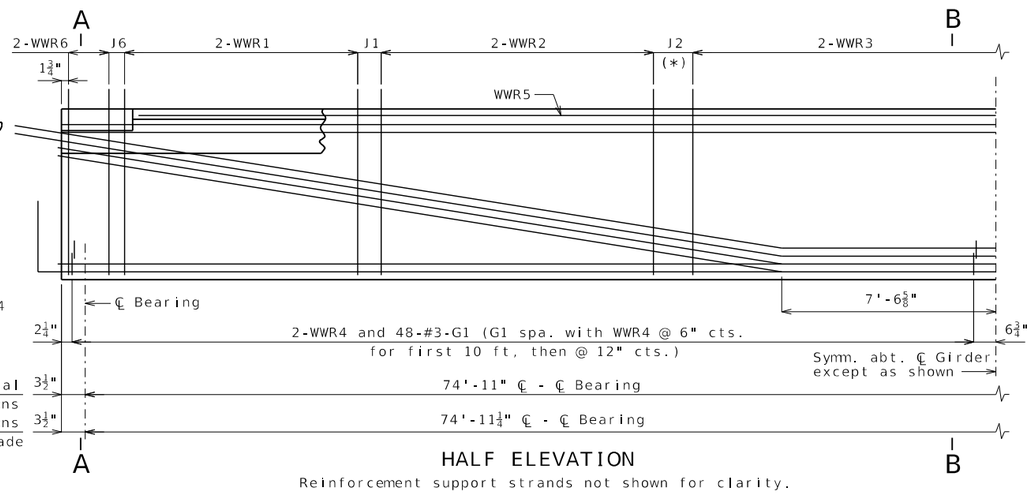

HALF ELEVATION

Reinforcement support strands not shown for clarity.

(*) Reinforcement spacing shown is based on horizontal girder dimensions. Adjust dimension as required for girder dimension along grade.

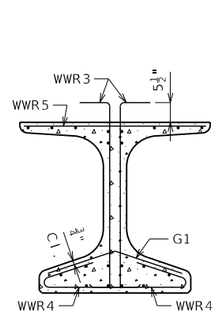

SECTION B-B

Strands not shown for clarity.

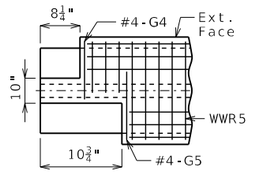

LEFT EXTERIOR GIRDER AT INTERMEDIATE BENT

Rotate 180° for right ext.

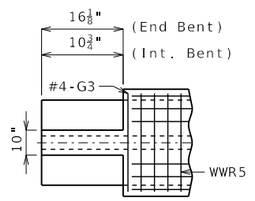

INTERIOR GIRDER AT ALL BENTS & EXTERIOR GIRDER AT END BENT

TOP FLANGE BLOCKOUT

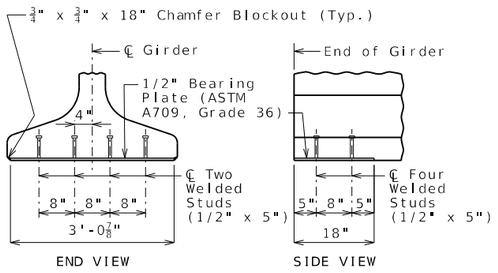

BEARING PLATE

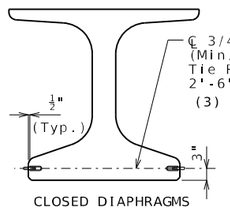

CLOSED DIAPHRAGMS AND INTEGRAL BENTS

COIL TIES

Exclude coil tie at exterior face of exterior girders except at integral end bents.

(3) 2'-3" at exterior face of exterior girders at end bents

NU-GIRDERS - SPAN (1-2)

Detailed September 2025
Checked September 2025

Note: This drawing is not to scale. Follow dimensions.

RYAN DAVID SHAW
NUMBER PE-2011020086
PROFESSIONAL ENGINEER
STATE OF MISSOURI
THIS SHEET HAS BEEN SIGNED, SEALED AND DATED ELECTRONICALLY

DATE PREPARED 4/1/2026

ROUTE I-270 | STATE MO

DISTRICT BR | SHEET NO. 18

COUNTY ST. LOUIS

JOB NO. JSL0021

CONTRACT ID.

PROJECT NO.

BRIDGE NO. A9489

DESCRIPTION | DATE

MISSOURI HIGHWAYS AND TRANSPORTATION COMMISSION
105 WEST CAPITOL
JEFFERSON CITY, MO 65102
1-888-ASK-MODOT (1-888-275-6636)

HDR Engineering, Inc.
1001 Highlands Plaza Drive
Suite 200
St. Louis, MO 63110
314-425-8300
Certificate of Authority: 000856

(1) Fabricator shall apply a bond breaker to this region.

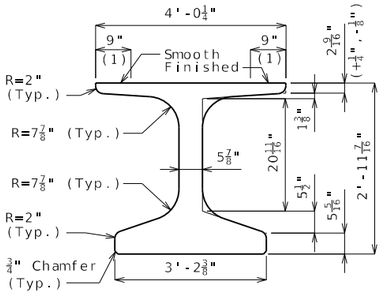

DIMENSIONS

(2) Outer strands tensioned to 2.02 kips/strand and inner strands to 8 kips/strand. Placed symmetrical about ℄ Girder. May be moved laterally in pairs.

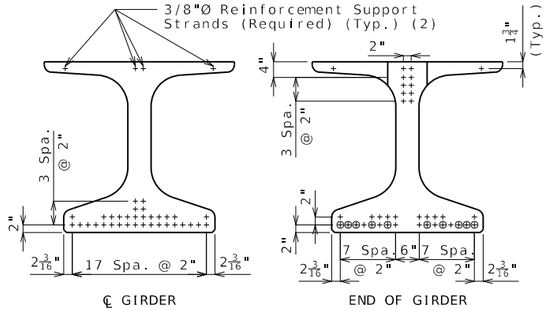

\+ Indicates prestressing strand.

o Indicates cut & shop bend with 3'-0" projection.

STRAND ARRANGEMENT

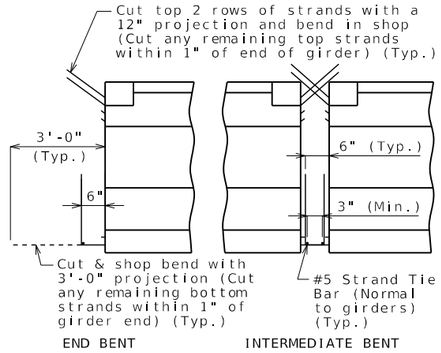

STRANDS AT GIRDER ENDS

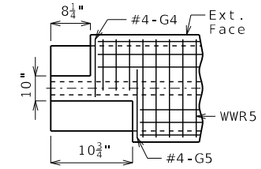

LEFT EXTERIOR GIRDER AT INTERMEDIATE BENT
Rotate 180° for right ext.

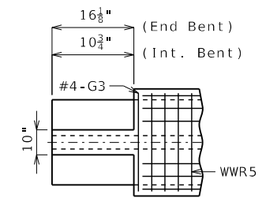

INTERIOR GIRDER AT ALL BENTS & EXTERIOR GIRDER AT END BENT

TOP FLANGE BLOCKOUT

Bill of Reinforcing Steel - Each Girder			
No.	Size/ Mark	Length	Shape
208	4 B1	4'-4"	11S
228	4 D1	4'-0"	9S
2	4 G3	3'-10"	20
2	4 G4	2'-3"	20
2	4 G5	2'-8"	20

Bending Diagrams

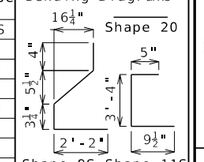

Welded Wire Reinforcement - Each Girder

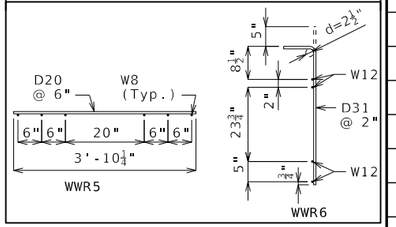

All dimensions are out to out.

Hooks and bends shall be in accordance with the CRSI Manual of Standard Practice for Detailing Reinforced Concrete Structures, Stirrup and Tie Dimensions.

Actual bar lengths are measured along centerline of bar to the nearest inch.

Minimum clearance to reinforcing shall be one inch.

All bar reinforcement shall be ASTM A706 Grade 60.

The two D1 bars may be furnished as one bar at the fabricator's option.

All B1 bars shall be epoxy coated.

G4 and G5 not required for interior girders. Half no. of G3, G4 and G5 not required for ext. girders of end spans.

General Notes:

Concrete for prestressed girders shall be Class A-1 with f'c = 8000 psi and f'ci = 6500 psi.

Use 34 strands, 0.6"Ø Grade 270, with an initial prestress force of 1494 kips.

Pretensioned members shall be in accordance with Sec 1029.

Fabricator shall be responsible for location and design of lifting devices.

Exterior and interior girders are the same except: coil ties and top flange blockout.

The contractor shall provide bracing necessary for lateral and torsional stability of the girders during construction of the concrete slab and remove the bracing after the slab has attained 75% design strength. Contractor shall not drill holes in the girders.

For Girder Camber Diagram, see Sheet No. 23.

For location of coil ties at concrete diaphragms and integral bents, see Sheets No. 8, 9 & 22.

Alternate bar reinforcing steel details are provided and may be used. The same type of reinforcing steel shall be used for all girders in all spans.

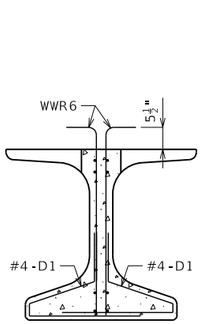

SECTION A-A
Strands not shown for clarity.

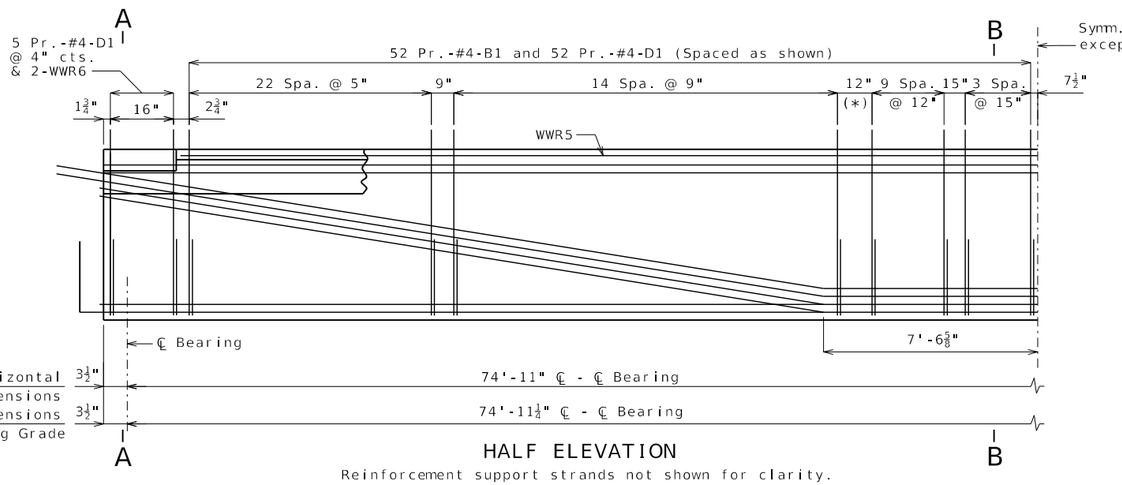

HALF ELEVATION

Reinforcement support strands not shown for clarity.

(*) Reinforcement spacing shown is based on horizontal girder dimensions. Adjust dimension as required for girder dimension along grade.

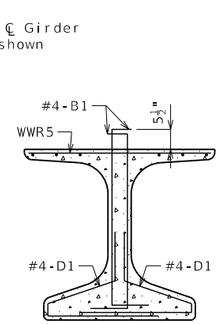

SECTION B-B
Strands not shown for clarity.

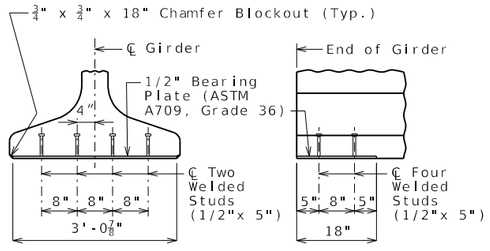

BEARING PLATE

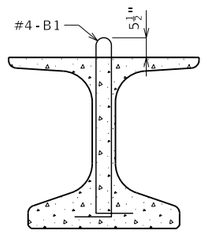

B1 BAR PERMISSIBLE ALTERNATE SHAPE

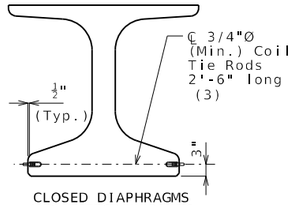

CLOSED DIAPHRAGMS AND INTEGRAL BENTS

COIL TIES

Exclude coil tie at exterior face of exterior girders except at integral end bents.

(3) 2'-3" at exterior face of exterior girders at end bents

NU-GIRDERS (ALTERNATE REINFORCEMENT) - SPAN (1-2)

Detailed September 2025
Checked September 2025

Note: This drawing is not to scale. Follow dimensions.

STATE OF MISSOURI
RYAN DAVID SHAW
NUMBER PE-2011020068
PROFESSIONAL ENGINEER
THIS SHEET HAS BEEN SIGNED, SEALED AND DATED ELECTRONICALLY

DATE PREPARED 4/1/2026

ROUTE I-270 | STATE MO
DISTRICT BR | SHEET NO. 19
COUNTY ST. LOUIS
JOB NO. JSL0021
CONTRACT ID.
PROJECT NO.
BRIDGE NO. A9489

DESCRIPTION
DATE

MISSOURI HIGHWAYS AND TRANSPORTATION COMMISSION
105 WEST CAPITOL
JEFFERSON CITY, MO 65102
1-888-ASK-MODOT (1-888-275-6636)

HDR Engineering, Inc.
1001 Highlands Plaza Drive
Suite 200
St. Louis, MO 63110
314-425-8300
Certificate of Authority: 000856

(1) Fabricator shall apply a bond breaker to this region.

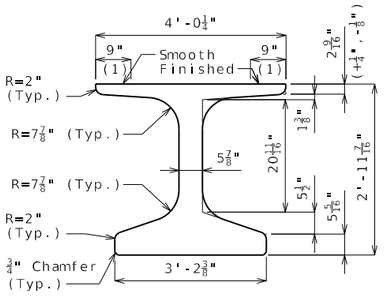

DIMENSIONS

(2) Outer strands tensioned to 2.02 kips/strand and inner strands to 8 kips/strand. Placed symmetrical about ℄ Girder. May be moved laterally in pairs.

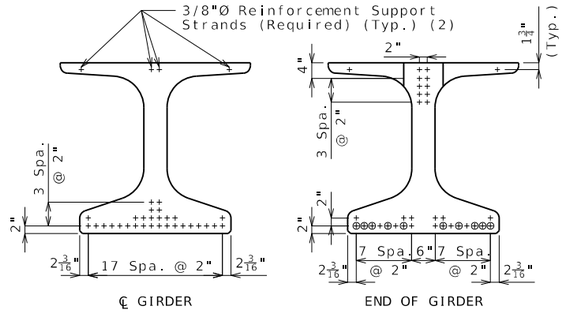

STRAND ARRANGEMENT

\+ Indicates prestressing strand.

o Indicates cut & shop bend with 3'-0" projection.

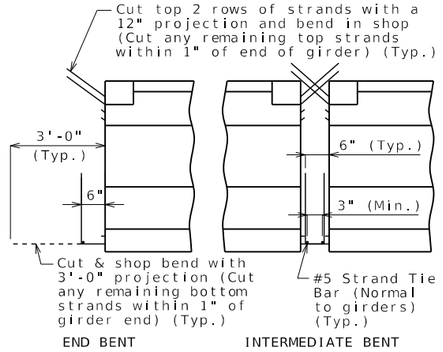

STRANDS AT GIRDER ENDS

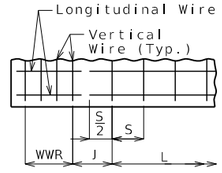

WELDED WIRE PLACEMENT

S = Vertical wire spacing

L = Length of WWR mats

J = Distance between WWR mats

Bill of Reinforcing Steel

Bars Each Girder

No.	Size/Mark	Length	Shape
92	3 G1	2'-10"	8
2	4 G3	3'-10"	20
2	4 G4	2'-3"	20
2	4 G5	2'-8"	20

Welded Wire Each Girder

Mark	Size	S	W	L	J
WWR1	D31	4"	W12	8'-4"	8"
WWR2	D31	8"	W12	10'-0"	5¼"
WWR3	D31	12"	W12	28'-0"	--
WWR6	D31	2"	W12	16"	4"

Bending Diagrams

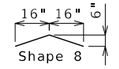

Shape 20

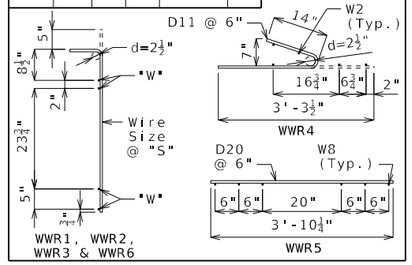

All dimensions are out to out.

Hooks and bends shall be in accordance with the CRSI Manual of Standard Practice for Detailing Reinforced Concrete Structures, Stirrup and Tie Dimensions.

Actual bar lengths are measured along centerline of bar to the nearest inch.

Minimum clearance to reinforcing shall be 1", unless otherwise shown.

All bar reinforcement shall be ASTM A706 Grade 60.

WWR shall not be epoxy coated.

G4 and G5 not required for interior girders. Half no. of G3, G4 and G5 not required for ext. girders of end spans.

General Notes:

Concrete for prestressed beams shall be Class A-1 with f'c = 8000 psi and f'ci = 6500 psi.

Use 30 strands, 0.6"Ø Grade 270, with an initial prestress force of 1318 kips.

Pretensioned members shall be in accordance with Sec 1029.

Fabricator shall be responsible for location and design of lifting devices.

Exterior and interior girders are the same except: coil ties and top flange blockout.

The contractor shall provide bracing necessary for lateral and torsional stability of the girders during construction of the concrete slab and remove the bracing after the slab has attained 75% design strength. Contractor shall not drill holes in the girders.

For Girder Camber Diagram, see Sheet No.23.

For location of coil ties at concrete diaphragms and integral bents, see Sheets No. 14, 15 & 22.

Alternate bar reinforcing steel details are provided and may be used. The same type of reinforcing steel shall be used for all girders in all spans.

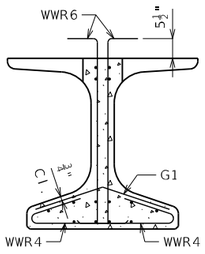

SECTION A-A

Strands not shown for clarity.

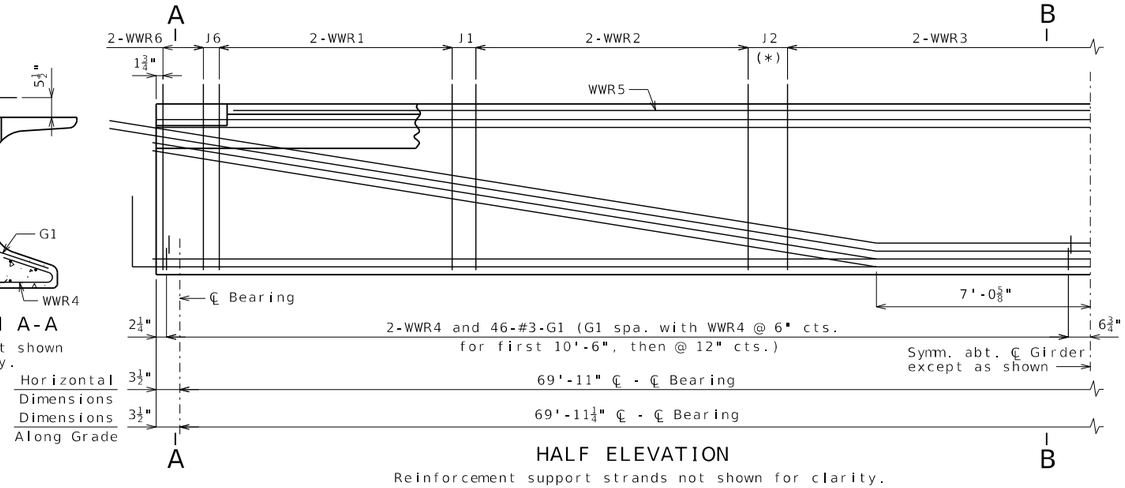

HALF ELEVATION

Reinforcement support strands not shown for clarity.

(*) Reinforcement spacing shown is based on horizontal girder dimensions. Adjust dimension as required for girder dimension along grade.

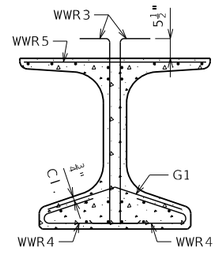

SECTION B-B

Strands not shown for clarity.

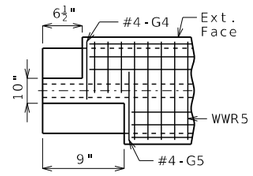

LEFT EXTERIOR GIRDER AT INTERMEDIATE BENT

Rotate 180° for right ext.

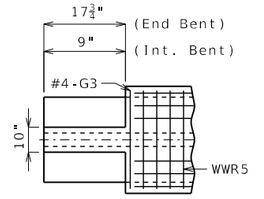

INTERIOR GIRDER AT ALL BENTS & EXTERIOR GIRDER AT END BENT

TOP FLANGE BLOCKOUT

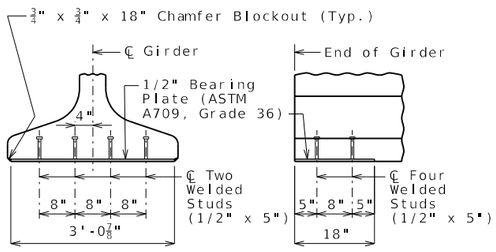

BEARING PLATE

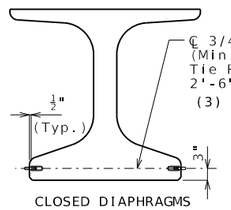

CLOSED DIAPHRAGMS AND INTEGRAL BENTS

COIL TIES

Exclude coil tie at exterior face of exterior girders except at integral end bents.

(3) 2'-3" at exterior face of exterior girders at end bents

NU-GIRDERS - SPAN (2-3)

Detailed September 2025
Checked September 2025

Note: This drawing is not to scale. Follow dimensions.

RYAN DAVID SHAW
NUMBER PE-2011020068
THIS SHEET HAS BEEN SIGNED, SEALED AND DATED ELECTRONICALLY

DATE PREPARED 4/1/2026
ROUTE I-270 | STATE MO
DISTRICT BR | SHEET NO. 20
COUNTY ST. LOUIS
JOB NO. JSL0021
CONTRACT ID.
PROJECT NO.
BRIDGE NO. A9489

DESCRIPTION | DATE

MISSOURI HIGHWAYS AND TRANSPORTATION COMMISSION
105 WEST CAPITOL
JEFFERSON CITY, MO 65102
1-888-ASK-MODOT (1-888-275-6636)

HDR Engineering, Inc.
1001 Highlands Plaza Drive
Suite 200
St. Louis, MO 63110
314-425-8300
Certificate of Authority: 000856

(1) Fabricator shall apply a bond breaker to this region.

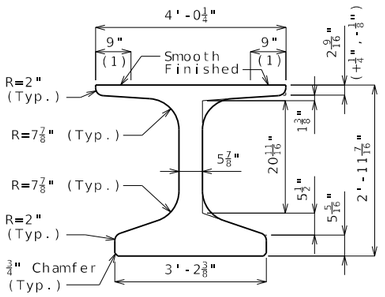

DIMENSIONS

(2) Outer strands tensioned to 2.02 kips/strand and inner strands to 8 kips/strand. Placed symmetrical about ℄ Girder. May be moved laterally in pairs.

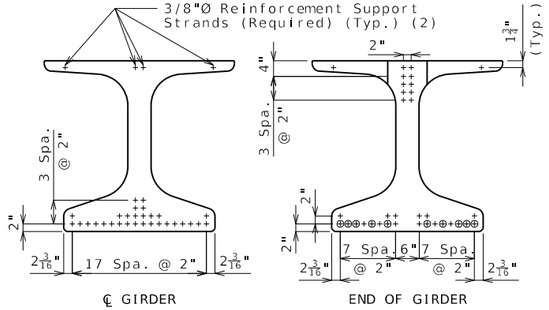

STRAND ARRANGEMENT

\+ Indicates prestressing strand.

o Indicates cut & shop bend with 3'-0" projection.

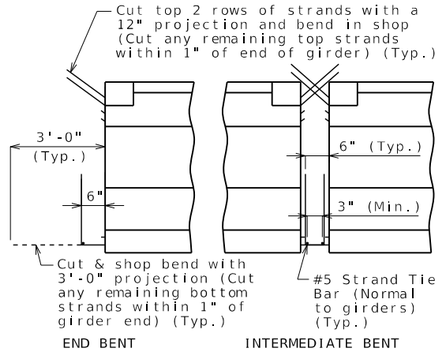

STRANDS AT GIRDER ENDS

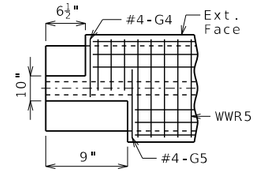

LEFT EXTERIOR GIRDER AT INTERMEDIATE BENT
Rotate 180° for right ext.

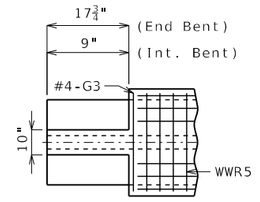

INTERIOR GIRDER AT ALL BENTS & EXTERIOR GIRDER AT END BENT

TOP FLANGE BLOCKOUT

Bill of Reinforcing Steel - Each Girder			
No.	Size/ Mark	Length	Shape
200	4 B1	4'-4"	11S
220	4 D1	4'-0"	9S
2	4 G3	3'-10"	20
2	4 G4	2'-3"	20
2	4 G5	2'-8"	20

Bending Diagrams

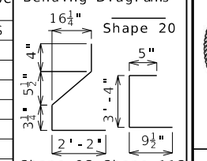

Welded Wire Reinforcement - Each Girder

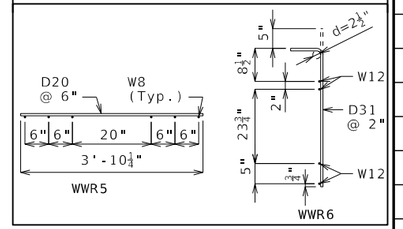

All dimensions are out to out.

Hooks and bends shall be in accordance with the CRSI Manual of Standard Practice for Detailing Reinforced Concrete Structures, Stirrup and Tie Dimensions.

Actual bar lengths are measured along centerline of bar to the nearest inch.

Minimum clearance to reinforcing shall be one inch.

All bar reinforcement shall be ASTM A706 Grade 60.

The two D1 bars may be furnished as one bar at the fabricator's option.

All B1 bars shall be epoxy coated.

G4 and G5 not required for interior girders. Half no. of G3, G4 and G5 not required for ext. girders of end spans.

General Notes:

Concrete for prestressed girders shall be Class A-1 with f'c = 8000 psi and f'ci = 6500 psi.

Use 30 strands, 0.6"Ø Grade 270, with an initial prestress force of 1318 kips.

Pretensioned members shall be in accordance with Sec 1029.

Fabricator shall be responsible for location and design of lifting devices.

Exterior and interior girders are the same except: coil ties and top flange blockout.

The contractor shall provide bracing necessary for lateral and torsional stability of the girders during construction of the concrete slab and remove the bracing after the slab has attained 75% design strength. Contractor shall not drill holes in the girders.

For Girder Camber Diagram, see Sheet No. 23.

For location of coil ties at concrete diaphragms and integral bents, see Sheets No. 14, 15 & 22.

Alternate bar reinforcing steel details are provided and may be used. The same type of reinforcing steel shall be used for all girders in all spans.

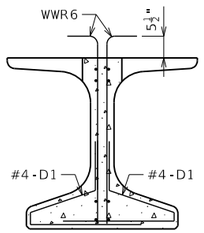

SECTION A-A

Strands not shown for clarity.

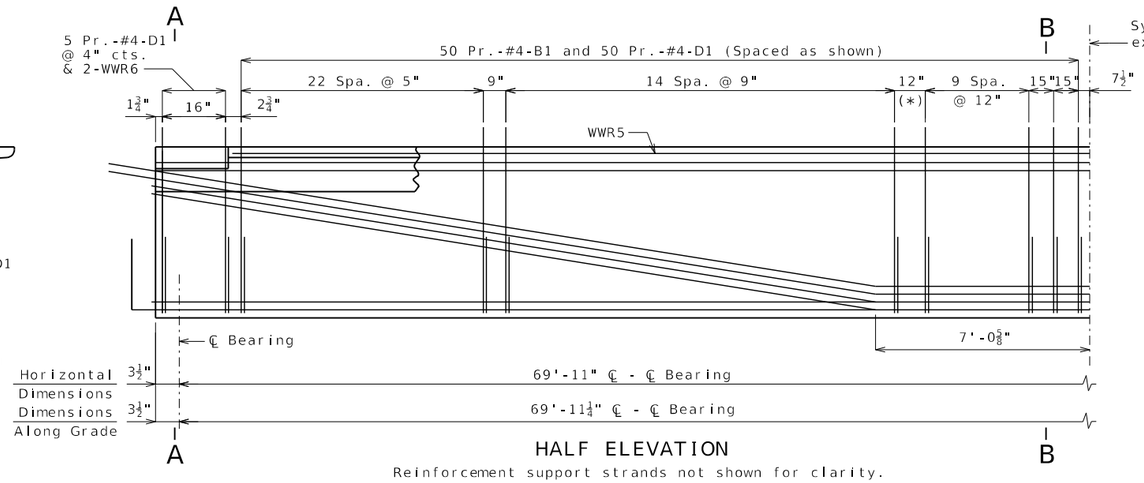

HALF ELEVATION

Reinforcement support strands not shown for clarity.

(*) Reinforcement spacing shown is based on horizontal girder dimensions. Adjust dimension as required for girder dimension along grade.

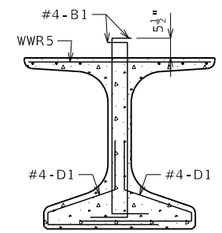

SECTION B-B

Strands not shown for clarity.

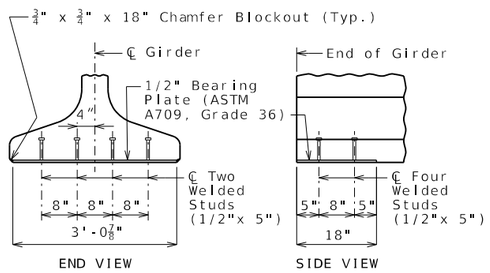

BEARING PLATE

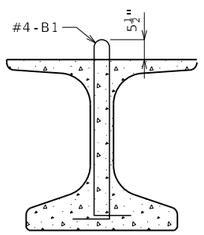

B1 BAR PERMISSIBLE ALTERNATE SHAPE

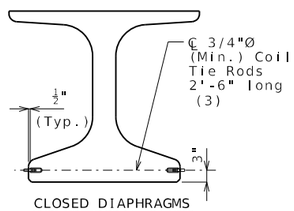

CLOSED DIAPHRAGMS AND INTEGRAL BENTS

COIL TIES

Exclude coil tie at exterior face of exterior girders except at integral end bents.

(3) 2'-3" at exterior face of exterior girders at end bents

NU-GIRDERS (ALTERNATE REINFORCEMENT) - SPAN (2-3)

Detailed September 2025
Checked September 2025

Note: This drawing is not to scale. Follow dimensions.

RYAN DAVID SHAW
NUMBER PE-2011002066
PROFESSIONAL ENGINEER
STATE OF MISSOURI
THIS SHEET HAS BEEN SIGNED, SEALED AND DATED ELECTRONICALLY

DATE PREPARED 4/1/2026

ROUTE I-270 | STATE MO
DISTRICT BR | SHEET NO. 21
COUNTY ST. LOUIS
JOB NO. JSL0021
CONTRACT ID.
PROJECT NO.
BRIDGE NO. A9489

DESCRIPTION | DATE

MISSOURI HIGHWAYS AND TRANSPORTATION COMMISSION
105 WEST CAPITOL
JEFFERSON CITY, MO 65102
1-888-ASK-MODOT (1-888-275-6636)
HDR Engineering, Inc.
1001 Highlands Plaza Drive
Suite 200
St. Louis, MO 63110
314-425-8300
Certificate of Authority: 000856

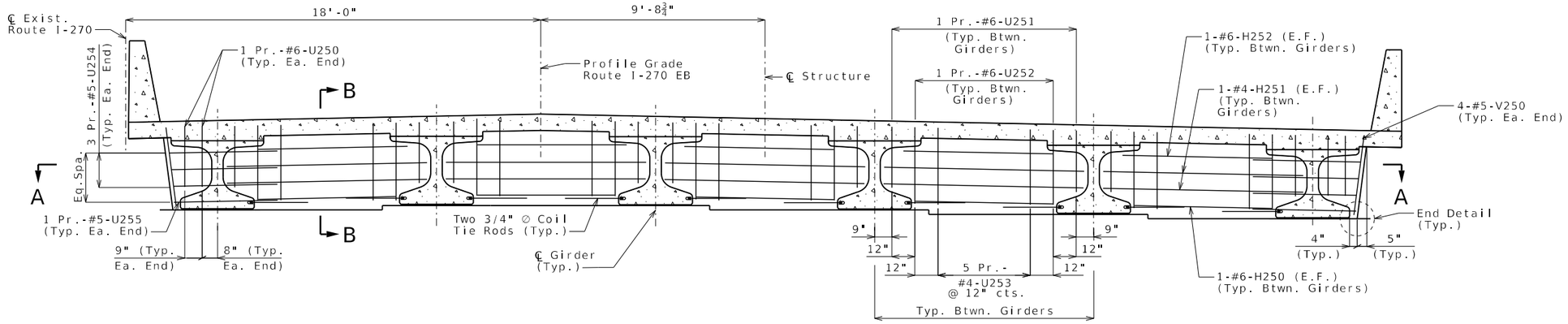

SECTION NEAR INTERMEDIATE BENT
(Looking Ahead Station)

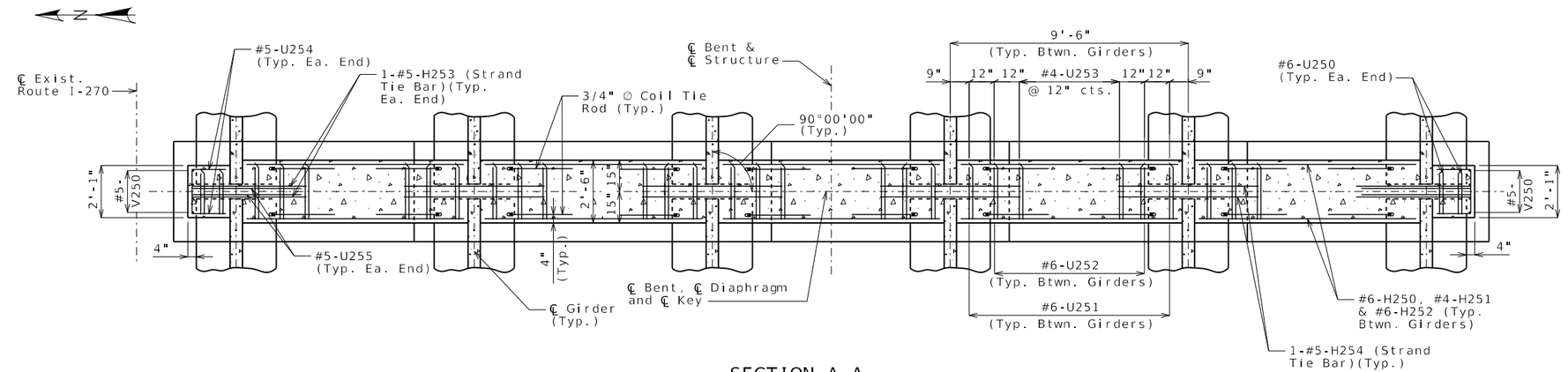

SECTION A-A

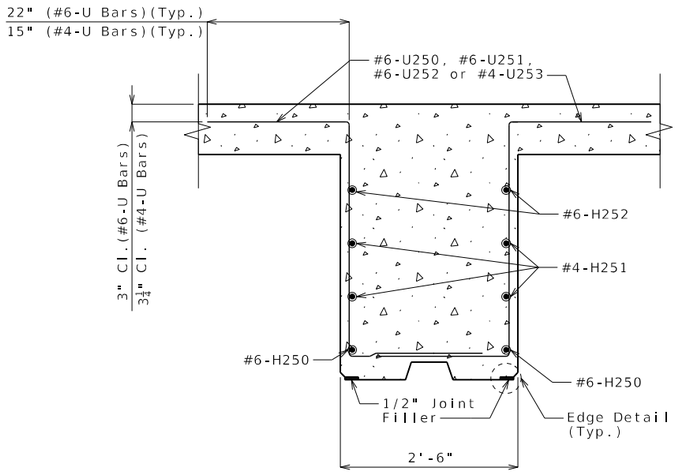

SECTION B-B

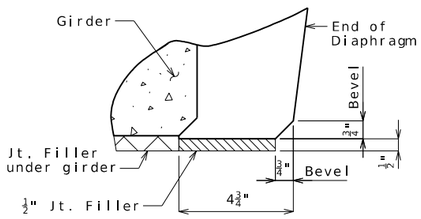

END DETAIL

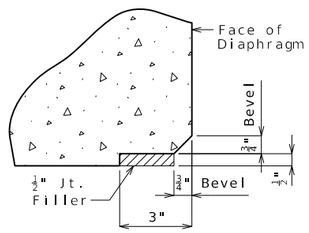

EDGE DETAIL

Notes:

Diaphragm at Intermediate Bent shall be built vertical.

The concrete diaphragm at the Intermediate Bent shall be poured a minimum of 30 minutes and a maximum of 2 hours before the slab is poured.

For location of strand tie bars and details of coil tie rods, see Sheets No. 18 thru 21.

DIAPHRAGM DETAILS AT INTERMEDIATE BENT NO. 2

Detailed September 2025
Checked September 2025

Note: This drawing is not to scale. Follow dimensions.

STATE OF MISSOURI
RYAN DAVID SHAW
NUMBER PE-2017000366
PROFESSIONAL ENGINEER
THIS SHEET HAS BEEN SIGNED, SEALED AND DATED ELECTRONICALLY

DATE PREPARED	4/1/2026
ROUTE	I-270
STATE	MO
DISTRICT	BR
SHEET NO.	22
COUNTY	ST. LOUIS
JOB NO.	JSL0021
CONTRACT ID.	
PROJECT NO.	
BRIDGE NO.	A9489

DESCRIPTION

DATE

MISSOURI HIGHWAYS AND TRANSPORTATION COMMISSION

MoDOT

105 WEST CAPITOL
JEFFERSON CITY, MO 65102
1-888-ASK-MODOT (1-888-275-6636)

HDR Engineering, Inc.
1001 Highlands Plaza Drive
Suite 200
St. Louis, MO 63110
314-425-8300
Certificate of Authority: 000856

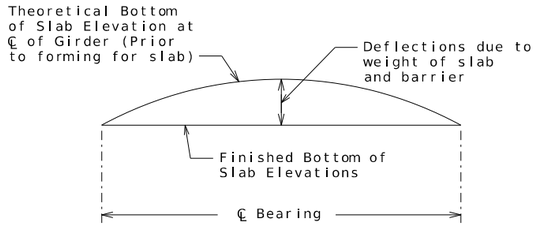

TYPICAL SLAB ELEVATIONS DIAGRAM

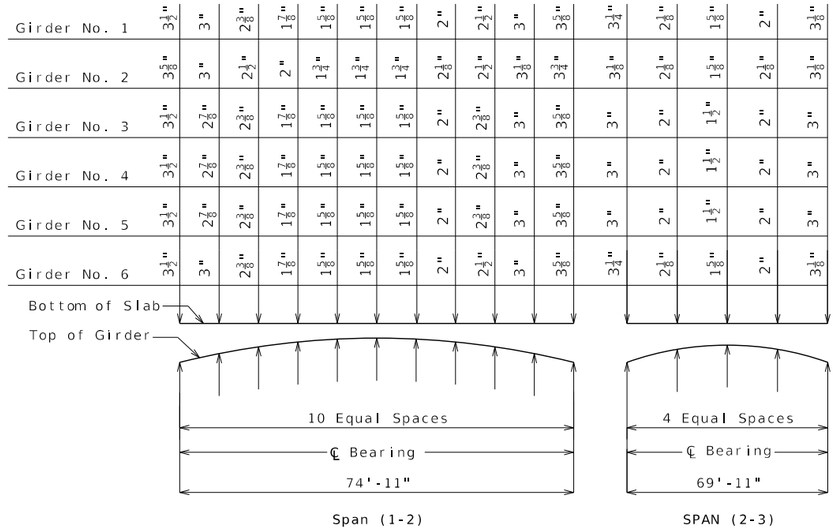

THEORETICAL SLAB HAUNCHING DIAGRAM

Theoretical Bottom of Slab Elevations at Centerline of Girder (Prior to forming for slab) (Estimated at 90 days)

Girder Number	Span (1-2) (74'-11" ℄ Brg. - ℄ Brg.)										
	℄ Brg.	.10	.20	.30	.40	.50	.60	.70	.80	.90	℄ Brg.
1	576.28	576.17	576.05	575.92	575.78	575.63	575.46	575.28	575.09	574.89	574.68
2	576.47	576.36	576.24	576.12	575.98	575.83	575.66	575.48	575.29	575.08	574.87
3	576.46	576.35	576.23	576.11	575.97	575.82	575.65	575.47	575.28	575.07	574.86
4	576.27	576.16	576.04	575.92	575.78	575.63	575.46	575.28	575.09	574.88	574.67
5	576.08	575.97	575.85	575.73	575.59	575.44	575.27	575.09	574.90	574.69	574.48
6	575.89	575.78	575.66	575.53	575.39	575.24	575.07	574.89	574.70	574.50	574.29

Girder Number	Span (2-3) (69'-11" ℄ Brg. - ℄ Brg.)				
	℄ Brg.	.25	.50	.75	℄ Brg.
1	574.65	574.28	573.86	573.37	572.83
2	574.84	574.48	574.06	573.57	573.02
3	574.83	574.47	574.05	573.56	573.01
4	574.64	574.28	573.86	573.37	572.82
5	574.45	574.09	573.67	573.18	572.63
6	574.26	573.89	573.47	572.98	572.44

Elevations are based on a constant slab thickness of 8 1/2" and include allowance for theoretical dead load deflections due to weight of slab and Type D barriers.

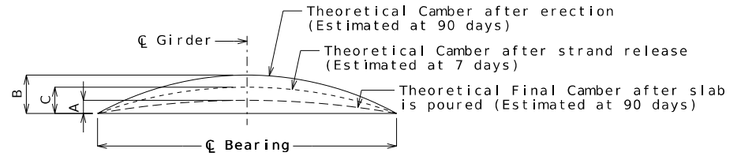

Girder	Span (1-2)			Span (2-3)		
	A	B	C	A	B	C
Ext. Girder	2 1/4"	3 1/2"	2 3/8"	1 3/4"	2 3/4"	1 7/8"
Int. Girder	2 1/8"			1 3/4"		

GIRDER CAMBER DIAGRAM

Conversion Factors for Girder Camber (Estimated at 90 days):

0.25 pt. = 0.7125 x 0.5 pt. - Span (2-3)

0.1 pt. = 0.314 x 0.5 pt.
0.2 pt. = 0.593 x 0.5 pt.
0.3 pt. = 0.813 x 0.5 pt.
0.4 pt. = 0.952 x 0.5 pt.
- Span (1-2)

Notes:

If girder camber is different from that shown in the camber diagram, in order to maintain minimum slab thickness, an adjustment of the slab haunches, an increase in slab thickness or a raise in grade uniformly throughout the structure shall be necessary. The haunch shall be limited to ensure the projecting girder reinforcement is embedded into slab at least 2 inches. No payment will be made for additional labor or materials required for variation in haunching, slab thickness or grade adjustment.

Concrete in the slab haunches is included in the Estimated Quantities for Slab on Concrete NU-Girder.

CAMBER, SLAB ELEVATIONS AND HAUNCHING

Detailed September 2025
Checked September 2025

Note: This drawing is not to scale. Follow dimensions.

RYAN DAVID SHAW
NUMBER PE-2011000286
PROFESSIONAL ENGINEER
STATE OF MISSOURI
THIS SHEET HAS BEEN SIGNED, SEALED AND DATED ELECTRONICALLY

DATE PREPARED 4/1/2026
ROUTE I-270 | STATE MO
DISTRICT BR | SHEET NO. 23
COUNTY ST. LOUIS
JOB NO. JSL0021
CONTRACT ID.
PROJECT NO.
BRIDGE NO. A9489

DESCRIPTION
DATE

MISSOURI HIGHWAYS AND TRANSPORTATION COMMISSION
105 WEST CAPITOL
JEFFERSON CITY, MO 65102
1-888-ASK-MODOT (1-888-275-6636)

HDR Engineering, Inc.
1001 Highlands Plaza Drive
Suite 200
St. Louis, MO 63110
314-425-8300
Certificate of Authority: 000856

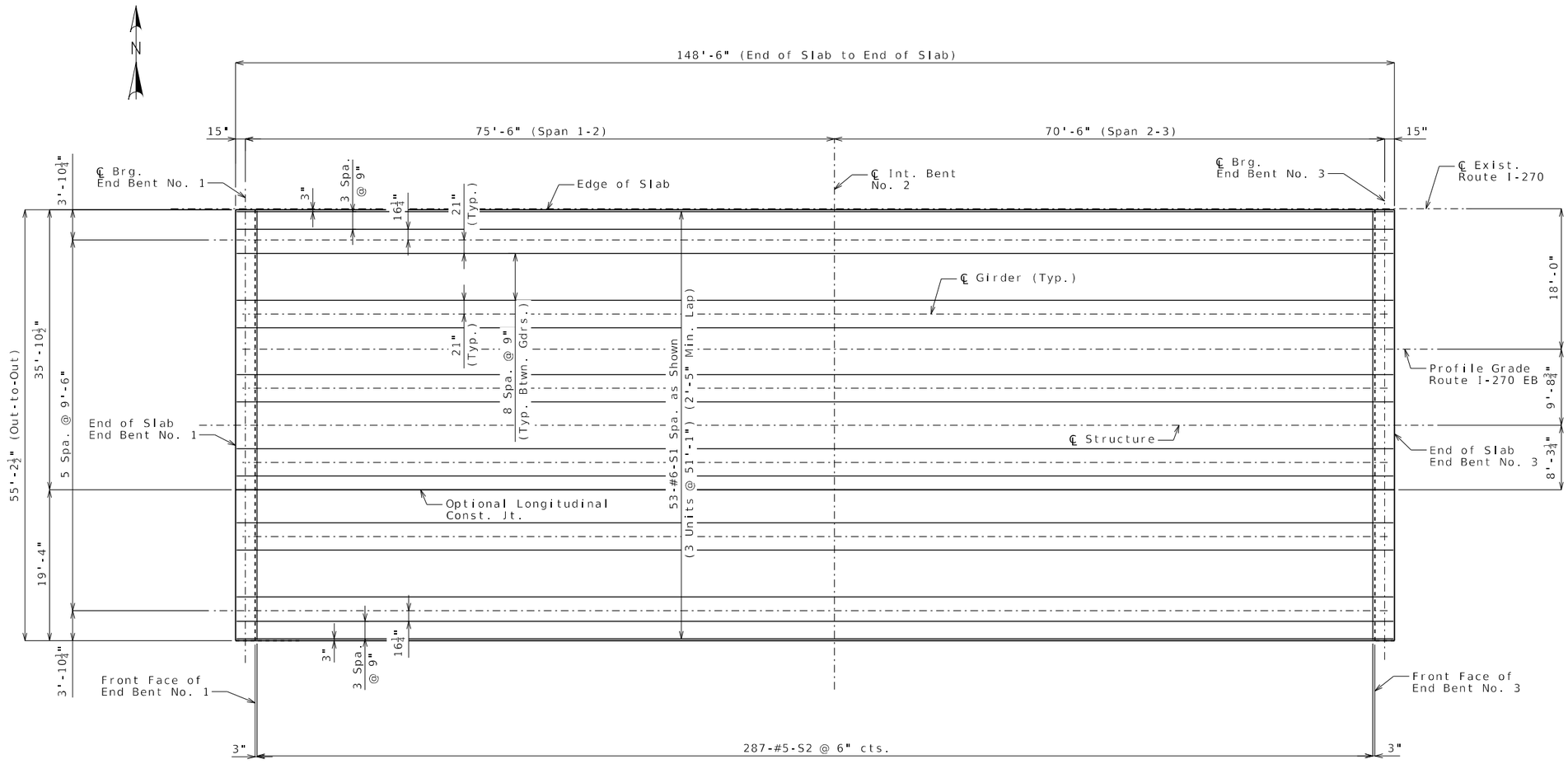

Notes:

Longitudinal slab dimensions are measured horizontally.

For Typical Slab Section and Slab Pouring Sequence, see Sheet No. 26.

For details and reinforcement of Type D Barrier not shown, see Sheets No. 27 & 28.

For Theoretical Slab Haunching Diagram and Theoretical Bottom of Slab Elevations, see Sheet No. 23.

For Staging Plans, see Sheets No. 4 thru 6.

PLAN OF SLAB REINFORCEMENT - BOTTOM

Detailed September 2025
Checked September 2025

Note: This drawing is not to scale. Follow dimensions.

STATE OF MISSOURI
RYAN DAVID SHAW
NUMBER PE-2017000366
PROFESSIONAL ENGINEER

THIS SHEET HAS BEEN SIGNED, SEALED AND DATED ELECTRONICALLY

DATE PREPARED	4/1/2026
ROUTE I-270	STATE MO
DISTRICT BR	SHEET NO. 24
COUNTY	ST. LOUIS
JOB NO.	JSL0021
CONTRACT ID.	
PROJECT NO.	
BRIDGE NO.	A9489

DATE	DESCRIPTION

MISSOURI HIGHWAYS AND TRANSPORTATION COMMISSION

MoDOT

105 WEST CAPITOL
JEFFERSON CITY, MO 65102
1-888-ASK-MODOT (1-888-275-6636)

HDR Engineering, Inc.
1001 Highlands Plaza Drive
Suite 200
St. Louis, MO 63110
314-425-8300
Certificate of Authority: 000856

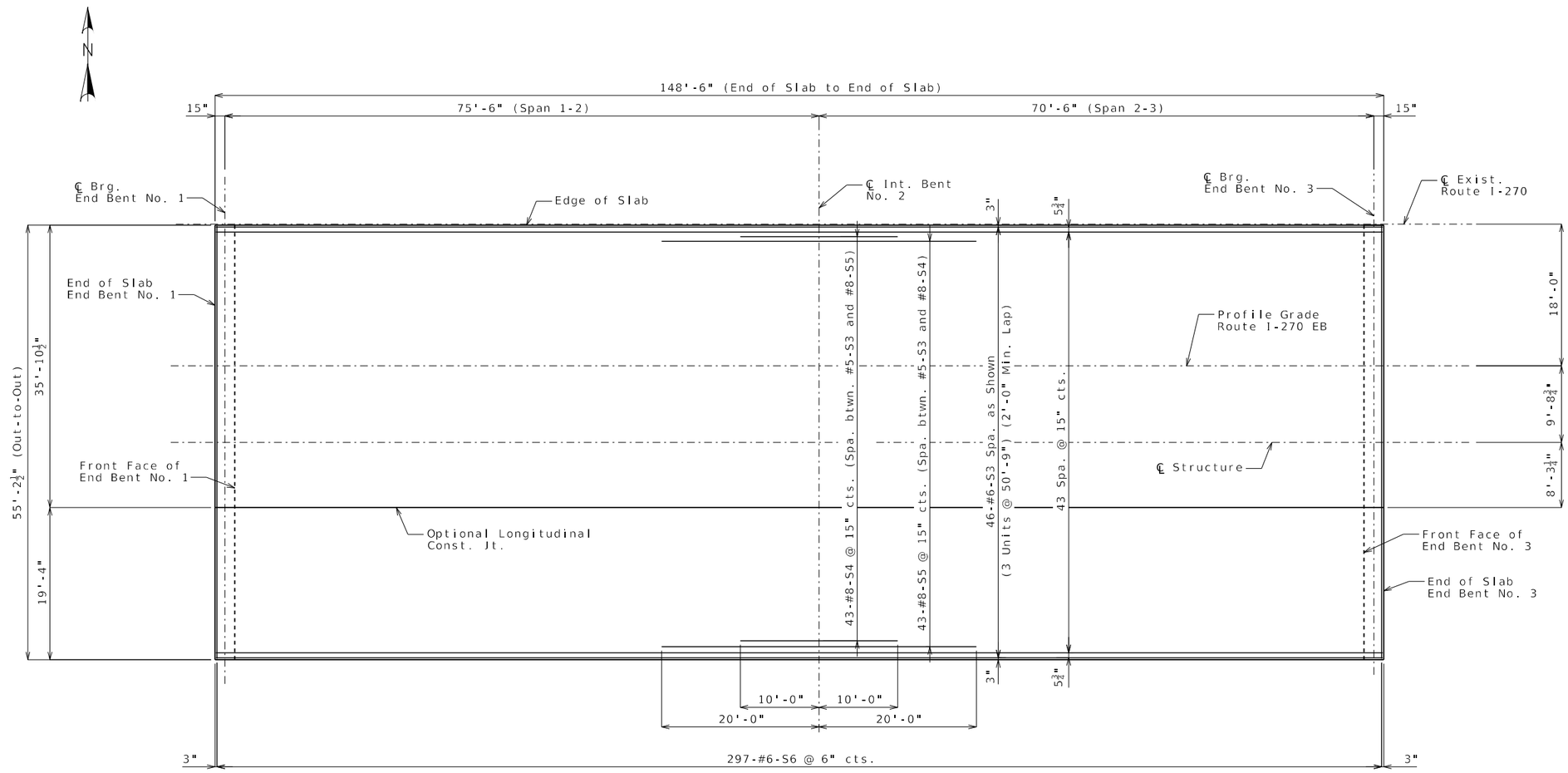

Notes:

Longitudinal slab dimensions are measured horizontally.

For Typical Slab Section and Slab Pouring Sequence, see Sheet No. 26.

For details and reinforcement of Type D Barrier not shown, see Sheets No. 27 & 28.

For Theoretical Slab Haunching Diagram and Theoretical Bottom of Slab Elevations, see Sheet No. 23.

For Staging Plans, see Sheets No. 4 thru 6.

PLAN OF SLAB REINFORCEMENT - TOP

Detailed September 2025
Checked September 2025

Note: This drawing is not to scale. Follow dimensions.

STATE OF MISSOURI
RYAN DAVID SHAW
NUMBER PE-2017000366
PROFESSIONAL ENGINEER

THIS SHEET HAS BEEN SIGNED, SEALED AND DATED ELECTRONICALLY

DATE PREPARED	4/1/2026
ROUTE	I-270
STATE	MO
DISTRICT	BR
SHEET NO.	25
COUNTY	ST. LOUIS
JOB NO.	JSL0021
CONTRACT ID.	
PROJECT NO.	
BRIDGE NO.	A9489

DESCRIPTION

DATE

MISSOURI HIGHWAYS AND TRANSPORTATION COMMISSION

MoDOT

105 WEST CAPITOL
JEFFERSON CITY, MO 65102
1-888-ASK-MODOT (1-888-275-6636)

HDR Engineering, Inc.
1001 Highlands Plaza Drive
Suite 200
St. Louis, MO 63110
314-425-8300
Certificate of Authority: 000856

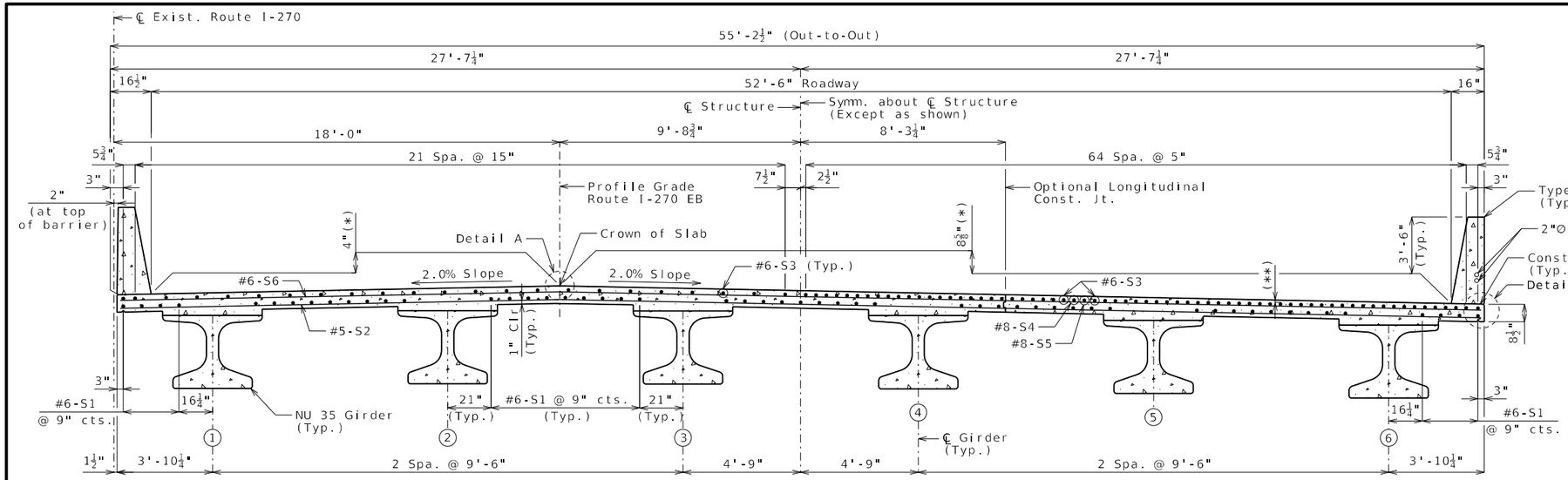

HALF SECTION NEAR MIDSPAN

HALF SECTION NEAR INTERMEDIATE BENT

SECTION THRU SLAB

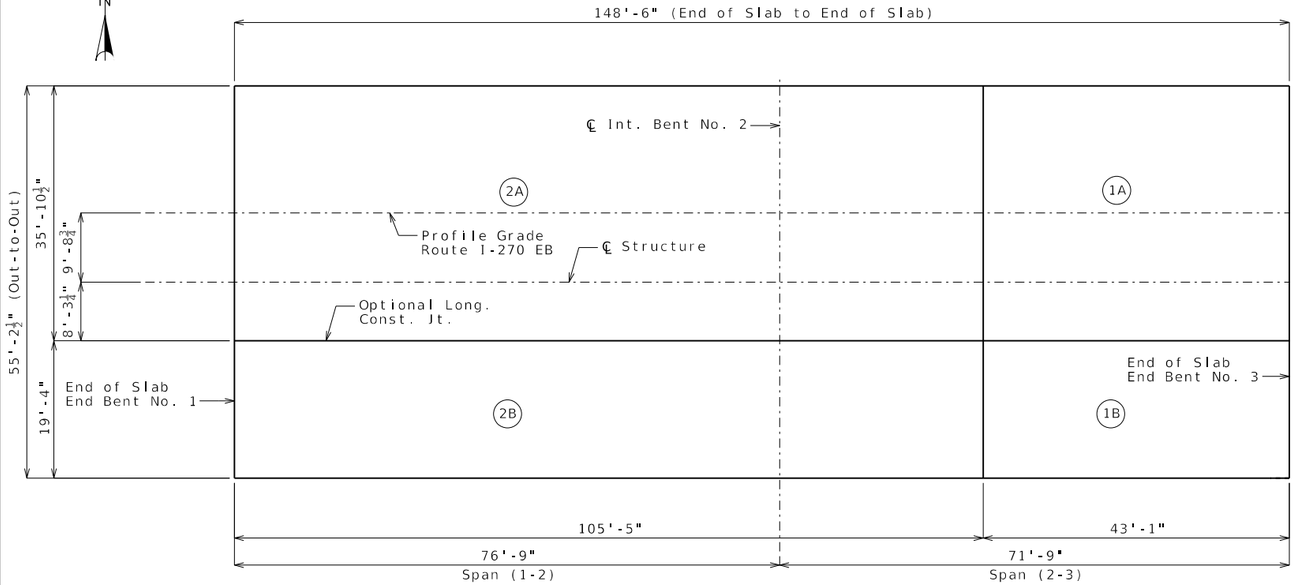

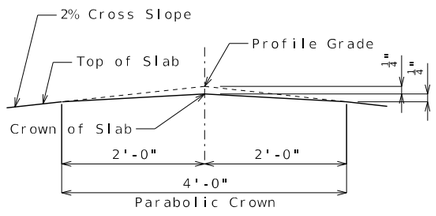

DETAIL A

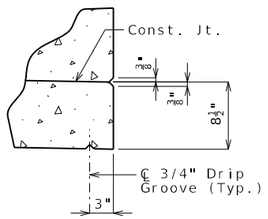

DETAIL B

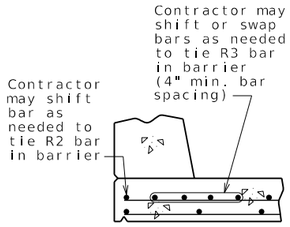

OPTIONAL SHIFTING
TOP BARS AT BARRIER

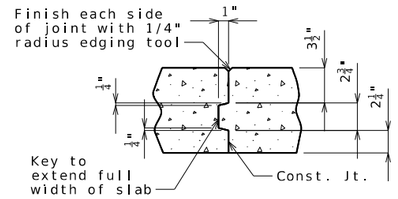

SLAB CONSTRUCTION JOINT

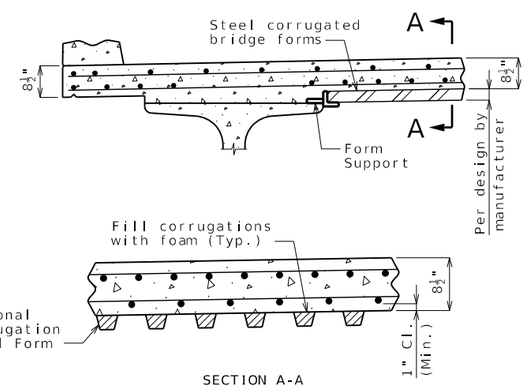

SECTION A-A

OPTIONAL STAY-IN-PLACE
FORM DETAILS

If the optional longitudinal construction joint is omitted the contractor shall submit a slab pour sequence for approval by the engineer.

The contractor shall furnish an approved retarder to retard the set of the concrete to 2.5 hours and shall pour and satisfactorily finish the slab pours at the rate given.

The concrete diaphragm at the intermediate bent and integral end bents shall be poured a minimum of 30 minutes and a maximum of 2 hours before the slab is poured.

The longitudinal construction joint may be omitted with the approval of the engineer. When the longitudinal construction joint is omitted, the minimum rate of pour for alternate pouring sequences shall be increased by a factor of 1.54.

	Sequence of Pours		Min. Rate of Pour Cu. Yds./Hr.
	Direction		With Retarder
Basic Sequence	1 End to 2	2 1 to End	25
Alternate pours to the basic sequence are subject to the approval of the engineer in accordance with Sec 703.			
Alternate A Pours	1 + 2 End to End		42

SLAB POURING SEQUENCE

(*) To Profile Grade Elevation

(**) 2 3/4" Cl. to #8-S4 & S5 bars. 3 1/8" Cl. to #6-S3 bars.

Notes:

For Plan of Slab Showing Reinforcement, see Sheets No. 24 & 25.

For details and reinforcement of Type D Barrier not shown, see Sheets No. 27 & 28.

For Theoretical Slab Haunching Diagram, Girder Camber Diagram and Theoretical Bottom of Slab Elevations, see Sheet No. 23.

For conduit and junction box details, see Sheet No. 31.

For Staging Plans, see Sheets No. 4 thru 6.

TYPICAL SLAB SECTION AND DETAILS

Detailed September 2025
Checked September 2025

Note: This drawing is not to scale. Follow dimensions.

RYAN DAVID SHAW
NUMBER PE-2017000866
THIS SHEET HAS BEEN SIGNED, SEALED AND DATED ELECTRONICALLY

DATE PREPARED 4/1/2026
ROUTE I-270 | STATE MO
DISTRICT BR | SHEET NO. 26
COUNTY ST. LOUIS
JOB NO. JSL0021
CONTRACT ID.
PROJECT NO.
BRIDGE NO. A9489

DESCRIPTION
DATE

MISSOURI HIGHWAYS AND TRANSPORTATION COMMISSION
105 WEST CAPITOL
JEFFERSON CITY, MO 65102
1-888-ASK-MODOT (1-888-275-6636)
HDR Engineering, Inc.
1001 Highlands Plaza Drive
Suite 200
St. Louis, MO 63110
314-425-8300
Certificate of Authority: 000856

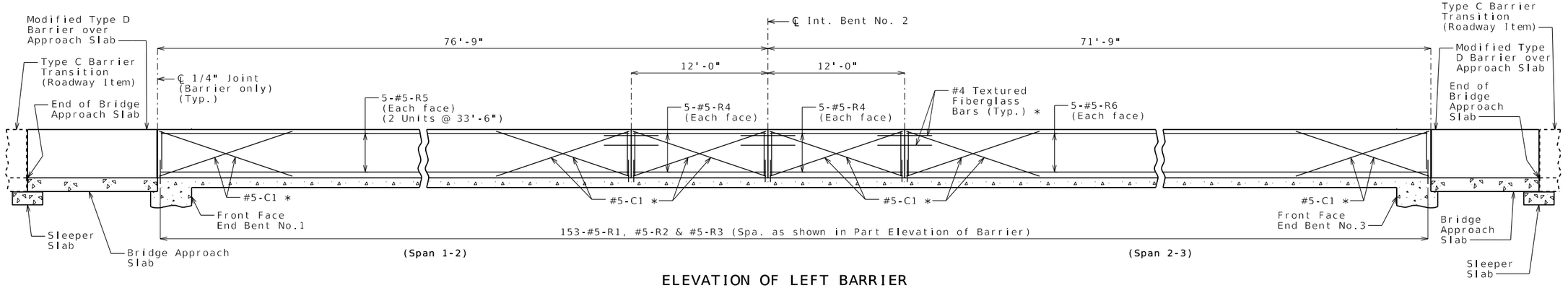

ELEVATION OF LEFT BARRIER

Longitudinal dimensions are horizontal.

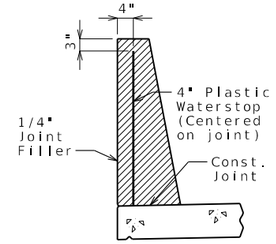

WATERSTOP DETAIL

Plastic waterstop shall be placed in all formed joints, except structures with superelevation, use on lower joints only.

Cost of plastic waterstop, complete in place, will be considered completely covered by the contract unit price for Type D Barrier.

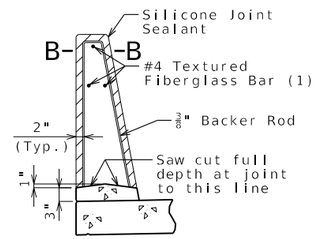

SECTION THRU SAW CUT JOINT

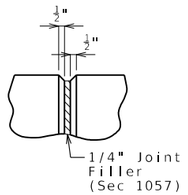

PART ELEVATION AT FORMED JOINT

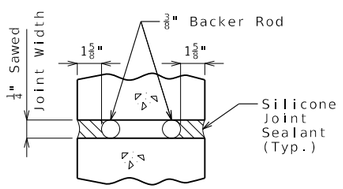

SECTION B-B

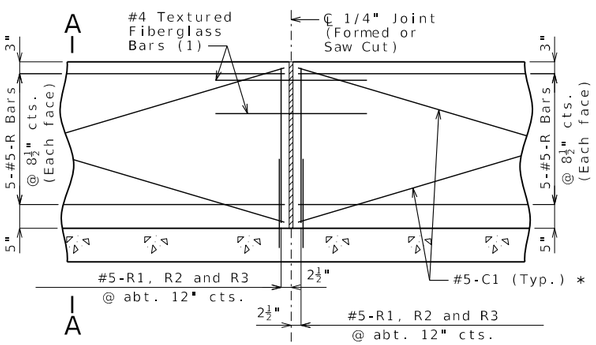

PART ELEVATION OF BARRIER

(1) Four feet long, centered on joint, slip-formed option only

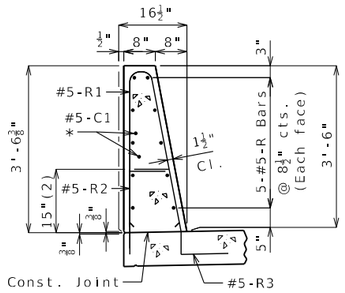

SECTION A-A

Use a minimum lap of 2'-6" for #5 horizontal barrier bars.

The cross-sectional area above the slab is 3.60 square feet.

(2) To top of bar

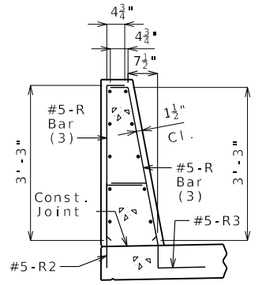

R-BAR PERMISSIBLE ALTERNATE SHAPE

(3) The R1 bar may be separated into two bars as shown, at the contractor's option, only when slip forming is not used. (All dimensions are out to out.)

General Notes:

* Slip-formed option only.

Conventional forming or slip forming may be used. Saw cut joints may be used with conventional forming.

Top of barrier shall be built parallel to grade and barrier joints normal to grade.

All exposed edges of barrier shall have either a 1/2-inch radius or a 3/8-inch bevel, unless otherwise noted.

Payment for all concrete and reinforcement, complete in place, will be considered completely covered by the contract unit price for Type D Barrier per linear foot.

Concrete in barrier shall be Class B-1.

Measurement of barrier is to the nearest linear foot for each structure, measured along the outside top of slab from end of slab to end of slab.

Concrete traffic barrier delineators shall be placed on top of the barrier as shown on Missouri Standard Plan 617.10 and in accordance with Sec 617. Delineators on bridges with two-lane, two-way traffic shall have retroreflective sheeting on both sides. Concrete traffic barrier delineators will be considered completely covered by the contract unit price for Type D Barrier.

Joint sealant and backer rods shall be in accordance with Sec 717 for silicone joint sealant for saw cut and formed joints.

For slip-formed option, both sides of barrier shall have a vertically broomed finish and the top shall have a transversely broomed finish.

Plastic waterstop shall not be used with saw cut joints.

For Modified Type D Barrier details, see Sheet No. 30.

TYPE D BARRIER (LEFT)

Detailed September 2025
Checked September 2025

Note: This drawing is not to scale. Follow dimensions.

STATE OF MISSOURI
RYAN DAVID SHAW
NUMBER PE-2011000886
PROFESSIONAL ENGINEER
THIS SHEET HAS BEEN SIGNED, SEALED AND DATED ELECTRONICALLY

DATE PREPARED 4/1/2026
ROUTE I-270 | STATE MO
DISTRICT BR | SHEET NO. 27
COUNTY ST. LOUIS
JOB NO. JSL0021
CONTRACT ID.
PROJECT NO.
BRIDGE NO. A9489

DESCRIPTION | DATE

MISSOURI HIGHWAYS AND TRANSPORTATION COMMISSION
105 WEST CAPITOL
JEFFERSON CITY, MO 65102
1-888-ASK-MODOT (1-888-275-6636)
HDR Engineering, Inc.
1001 Highlands Plaza Drive
Suite 200
St. Louis, MO 63110
314-425-8300
Certificate of Authority: 000856

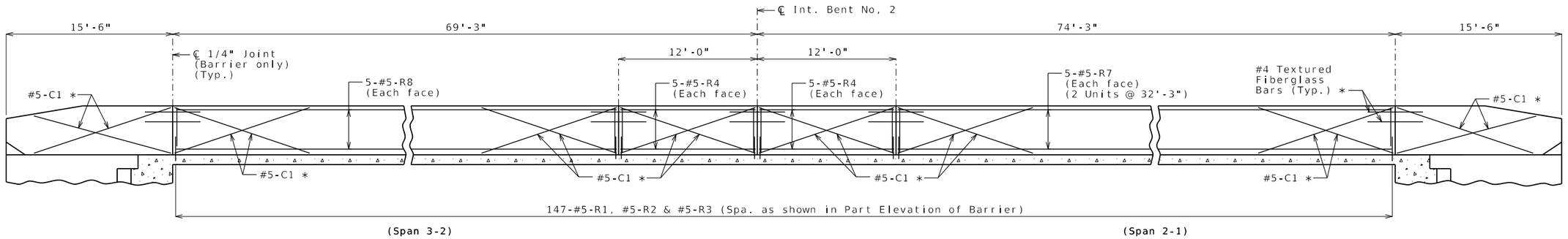

ELEVATION OF RIGHT BARRIER

Longitudinal dimensions are horizontal.

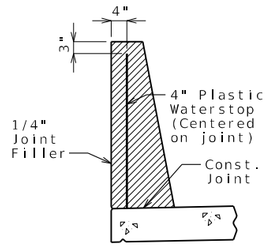

WATERSTOP DETAIL

Plastic waterstop shall be placed in all formed joints, except structures with superelevation, use on lower joints only.

Cost of plastic waterstop, complete in place, will be considered completely covered by the contract unit price for Type D Barrier.

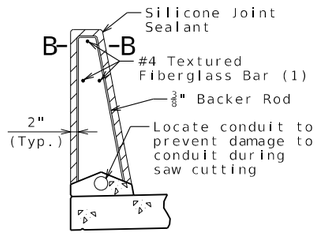

SECTION THRU SAW CUT JOINT

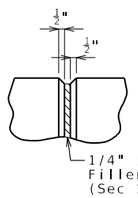

PART ELEVATION AT FORMED JOINT

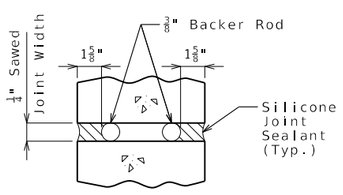

SECTION B-B

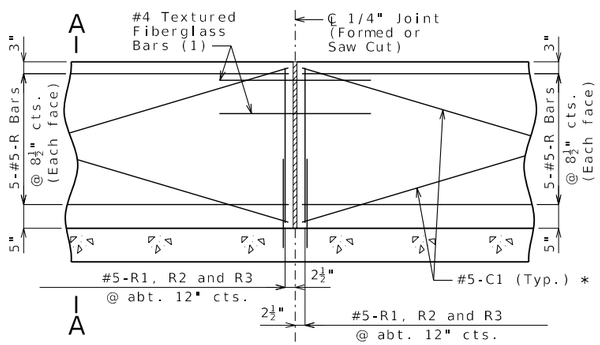

PART ELEVATION OF BARRIER

(1) Four feet long, centered on joint, slip-formed option only

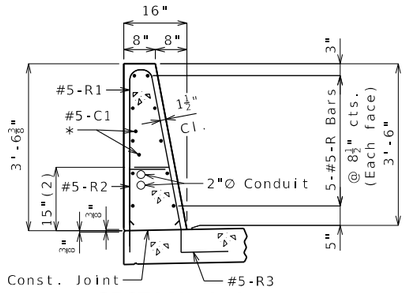

SECTION A-A

Use a minimum lap of 2'-6" for #5 horizontal barrier bars.

The cross-sectional area above the slab is 3.52 square feet.

(2) To top of bar

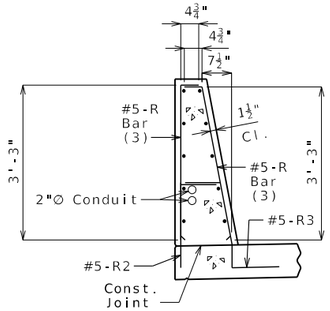

R-BAR PERMISSIBLE ALTERNATE SHAPE

(3) The R1 bar may be separated into two bars as shown, at the contractor's option, only when slip forming is not used. (All dimensions are out to out.)

General Notes:

* Slip-formed option only.

Conventional forming or slip forming may be used. Saw cut joints may be used with conventional forming.

Top of barrier shall be built parallel to grade and barrier joints (except at end bents) normal to grade.

All exposed edges of barrier shall have either a 1/2-inch radius or a 3/8-inch bevel, unless otherwise noted.

Payment for all concrete and reinforcement, complete in place, will be considered completely covered by the contract unit price for Type D Barrier per linear foot.

Concrete in barrier shall be Class B-1.

Measurement of barrier is to the nearest linear foot for each structure, measured along the outside top of slab from end of wing to end of wing.

Concrete traffic barrier delineators shall be placed on top of the barrier as shown on Missouri Standard Plan 617.10 and in accordance with Sec 617. Delineators on bridges with two-lane, two-way traffic shall have retroreflective sheeting on both sides. Concrete traffic barrier delineators will be considered completely covered by the contract unit price for Type D Barrier.

Joint sealant and backer rods shall be in accordance with Sec 717 for silicone joint sealant for saw cut and formed joints.

For slip-formed option, both sides of barrier shall have a vertically broomed finish and the top shall have a transversely broomed finish.

Plastic waterstop shall not be used with saw cut joints.

For conduit details, see Sheet No. 31

TYPE D BARRIER (RIGHT)

Detailed September 2025
Checked September 2025

Note: This drawing is not to scale. Follow dimensions.

RYAN DAVID SHAW
NUMBER PE-2017000866
PROFESSIONAL ENGINEER
STATE OF MISSOURI
THIS SHEET HAS BEEN SIGNED, SEALED AND DATED ELECTRONICALLY

DATE PREPARED 4/1/2026
ROUTE I-270 | STATE MO
DISTRICT BR | SHEET NO. 28
COUNTY ST. LOUIS
JOB NO. JSL0021
CONTRACT ID.
PROJECT NO.
BRIDGE NO. A9489

DESCRIPTION | DATE

MISSOURI HIGHWAYS AND TRANSPORTATION COMMISSION
105 WEST CAPITOL
JEFFERSON CITY, MO 65102
1-888-ASK-MODOT (1-888-275-6636)
HDR Engineering, Inc.
1001 Highlands Plaza Drive
Suite 200
St. Louis, MO 63110
314-425-8300
Certificate of Authority: 000856

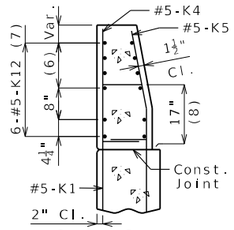

SECTION A-A

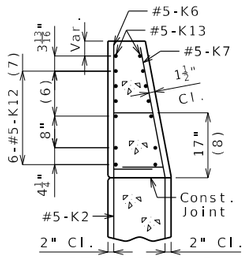

SECTION B-B

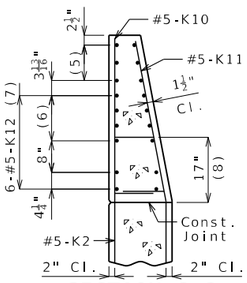

SECTION C-C

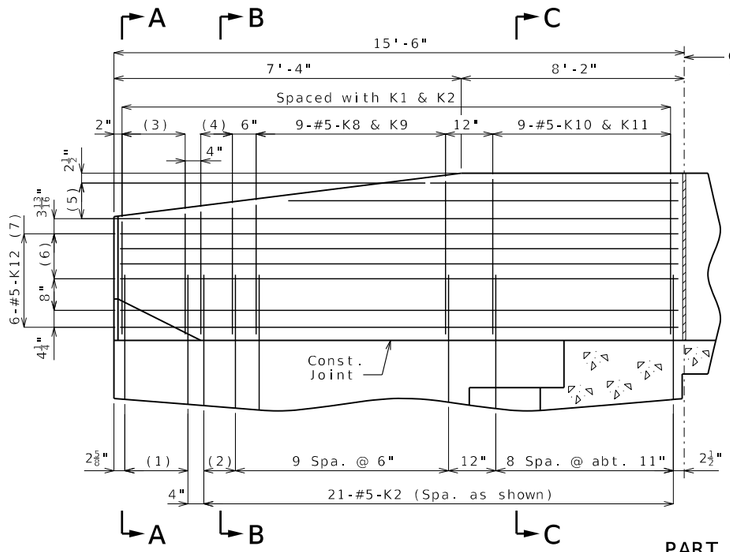

END BENT NO. 3

PART ELEVATION

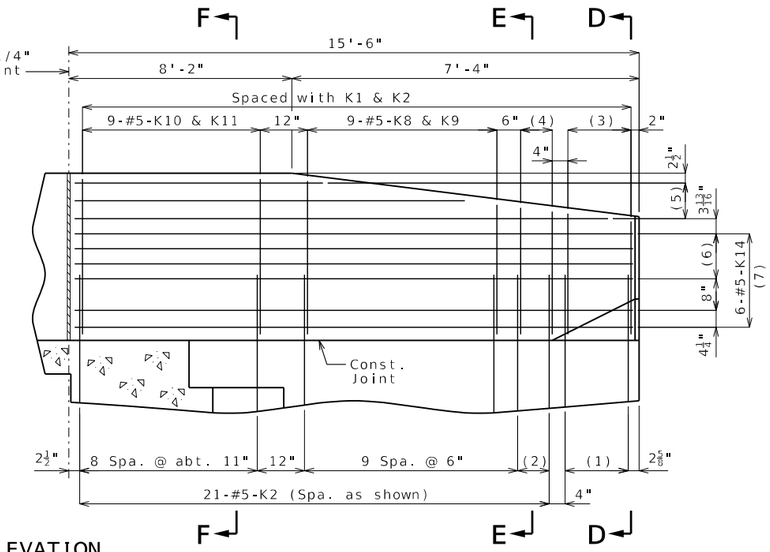

END BENT NO. 1

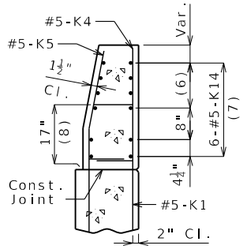

SECTION D-D

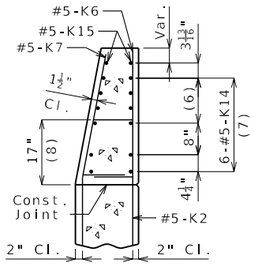

SECTION E-E

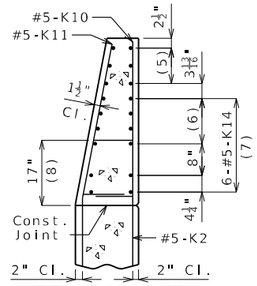

SECTION F-F

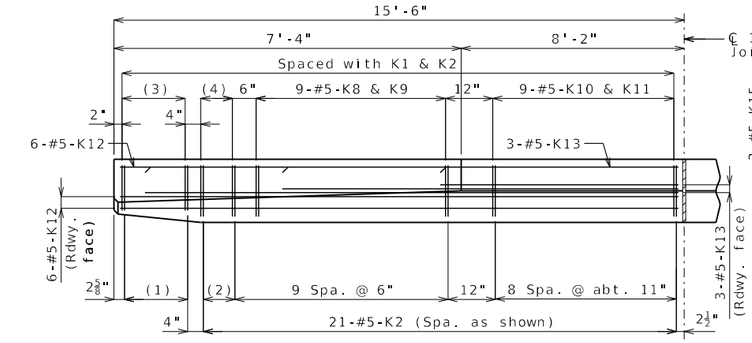

END BENT NO. 3

PART PLAN

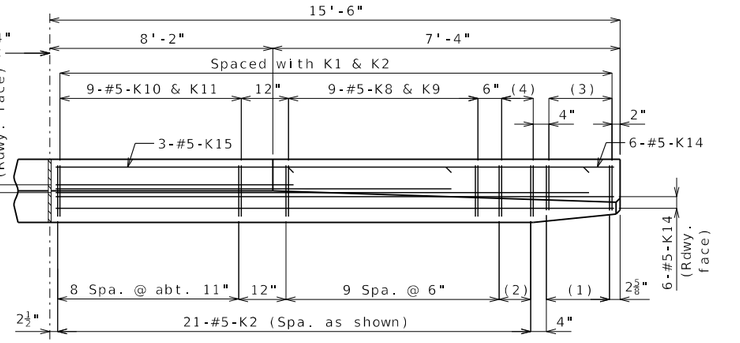

END BENT NO. 1

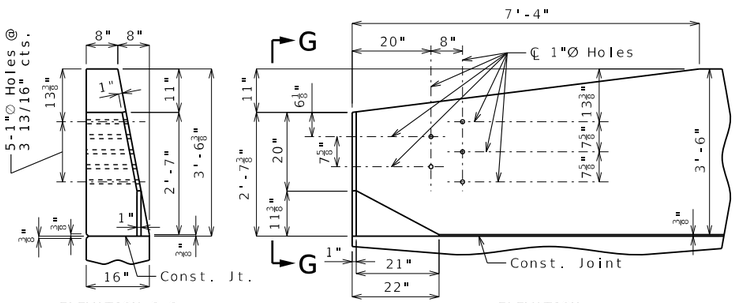

ELEVATION G-G

ELEVATION

(1) 5-#5-K1 @ 4" cts.

(2) 2 spaces @ 4"

(3) 5-#5-K4 & K5

(4) 3-#5-K6 & K7

(5) 3-#5-K13 or K15 @ 4½" cts., each face

(6) 3 spaces @ 3 13/16"

(7) Spaced as shown, each face

(8) To top of bar

* Transition to zero at Type A curb for gutter lines to match.

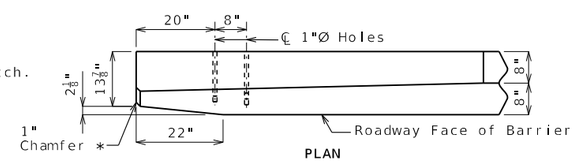

PLAN

DETAILS OF GUARD RAIL ATTACHMENT

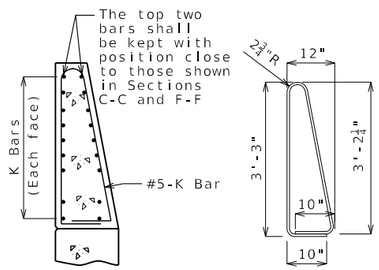

K10-K11 BAR PERMISSIBLE ALTERNATE SHAPE

(Other K bars not shown for clarity)

The K10-K11 bar combination may be furnished as one bar as shown, at the contractor's option.

Notes:

All dimensions are out to out.

For conduit and junction box details, see Sheet No. 31

General Notes:

Concrete traffic barrier delineators shall be placed on top of the barrier as shown on Missouri Standard Plan 617.10 and in accordance with Sec 617. Delineators on bridges with two-lane, two-way traffic shall have retroreflective sheeting on both sides. Concrete traffic barrier delineators will be considered completely covered by the contract unit price for Type D Barrier.

Reinforcing Steel:
Minimum clearance to reinforcing steel shall be 1 1/2" except as shown for bars embedded into end bent.

TYPE D BARRIER AT END BENTS (RIGHT)

(Right Barrier Only)

Detailed September 2025
Checked September 2025

Note: This drawing is not to scale. Follow dimensions.

RYAN DAVID SHAW
NUMBER PE-2011020886
THIS SHEET HAS BEEN SIGNED, SEALED AND DATED ELECTRONICALLY

DATE PREPARED
4/1/2026

ROUTE	STATE
I-270	MO
DISTRICT	SHEET NO.
BR	29

COUNTY
ST. LOUIS

JOB NO.
JSL0021

CONTRACT ID.

PROJECT NO.

BRIDGE NO.
A9489

DESCRIPTION

DATE

MISSOURI HIGHWAYS AND TRANSPORTATION COMMISSION
105 WEST CAPITOL
JEFFERSON CITY, MO 65102
1-888-ASK-MODOT (1-888-275-6636)

HDR Engineering, Inc.
1001 Highlands Plaza Drive
Suite 200
St. Louis, MO 63110
314-425-8300
Certificate of Authority: 000856

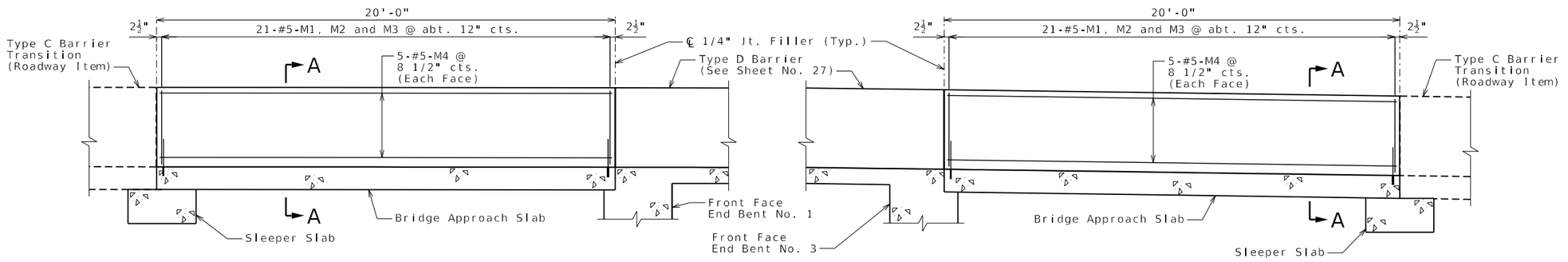

PART ELEVATION OF BARRIER ON APPROACH SLABS

Longitudinal dimensions are horizontal.

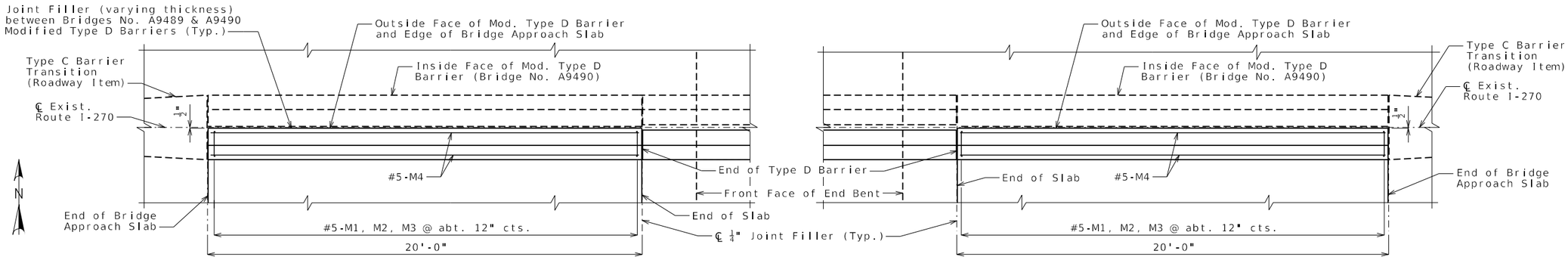

PART PLAN OF BARRIER ON APPROACH SLABS

Longitudinal dimensions are horizontal.

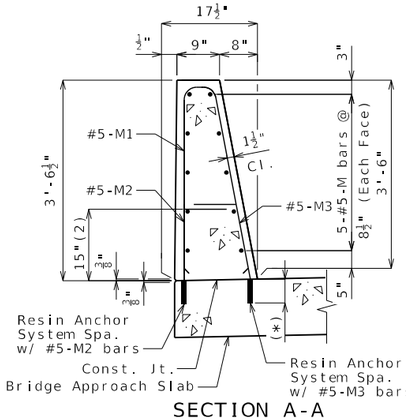

SECTION A-A

The cross-sectional area above the approach slab is 3.89 square feet.

(2) To top bar.

(*) Manufacturer's embedment length (5" minimum)

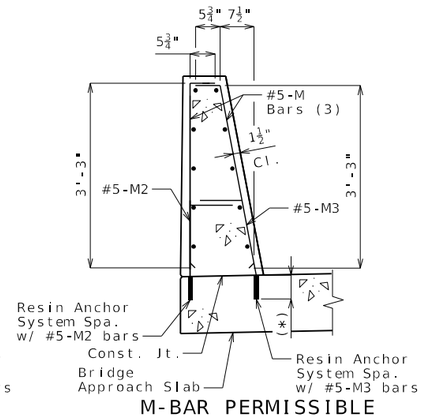

M-BAR PERMISSIBLE ALTERNATE SHAPE

(3) The M1 bar may be separated into two bars as shown, at the contractor's option. (All dimensions are out to out.)

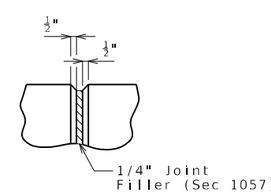

PART ELEVATION AT FORMED JOINT

Notes:

Conventional forming shall be used.

Top of Modified Type D Barrier shall be built parallel to grade with barrier curb joints.

All exposed edges of barrier shall have either a 1/2-inch radius or a 3/8-inch bevel, unless otherwise noted.

Payment for all concrete and reinforcement, complete in place, will be considered completely covered by the contract unit price for Modified Type D Barrier per linear foot.

Concrete in the barrier shall be Class B-1.

Measurement of barrier is to the nearest linear foot for each structure, measured along the top of approach slab at roadway face of barrier as detailed.

Concrete traffic barrier delineators shall be placed on top of the barrier as shown on Missouri Standard Plan 617.10 and in accordance with Sec 617. Delineators on bridges with two-lane, two-way traffic shall have retroreflective sheeting on both sides. Concrete traffic barrier delineators will be considered completely covered by the contract unit price for Modified Type D Barrier.

The contractor shall use one of the qualified resin anchor systems in accordance with Sec 1039.

Cost of furnishing and installing resin anchor systems, complete in place, will be considered completely covered by the contract unit price for Modified Type D Barrier.

The minimum embedment depth in concrete with f'c = 4000 psi for the resin anchor system shall be that required to meet the minimum ultimate pullout strength in accordance with Sec 1039 but shall not be less than 5".

A galvanized #5 Grade 60 reinforcing bar shall be substituted for the 5/8"Ø threaded rod.

MODIFIED TYPE D BARRIER (LEFT) AT APPROACH SLABS

Detailed September 2025
Checked September 2025

Note: This drawing is not to scale. Follow dimensions.

Sheet No. 30 of 40

STATE OF MISSOURI
RYAN DAVID SHAW
NUMBER PE-2017000366
PROFESSIONAL ENGINEER
THIS SHEET HAS BEEN SIGNED, SEALED AND DATED ELECTRONICALLY

DATE PREPARED	4/1/2026
ROUTE	I-270
STATE	MO
DISTRICT	BR
SHEET NO.	30
COUNTY	ST. LOUIS
JOB NO.	JSL0021
CONTRACT ID.	
PROJECT NO.	
BRIDGE NO.	A9489

DESCRIPTION

DATE

MISSOURI HIGHWAYS AND TRANSPORTATION COMMISSION

MoDOT

105 WEST CAPITOL
JEFFERSON CITY, MO 65102
1-888-ASK-MODOT (1-888-275-6636)

HDR Engineering, Inc.
1001 Highlands Plaza Drive
Suite 200
St. Louis, MO 63110
314-425-8300
Certificate of Authority: 000856

c:\pwworking\central01\d4975494\B_A9489_030_SL0021.dgn 1:40:26 PM 4/1/2026

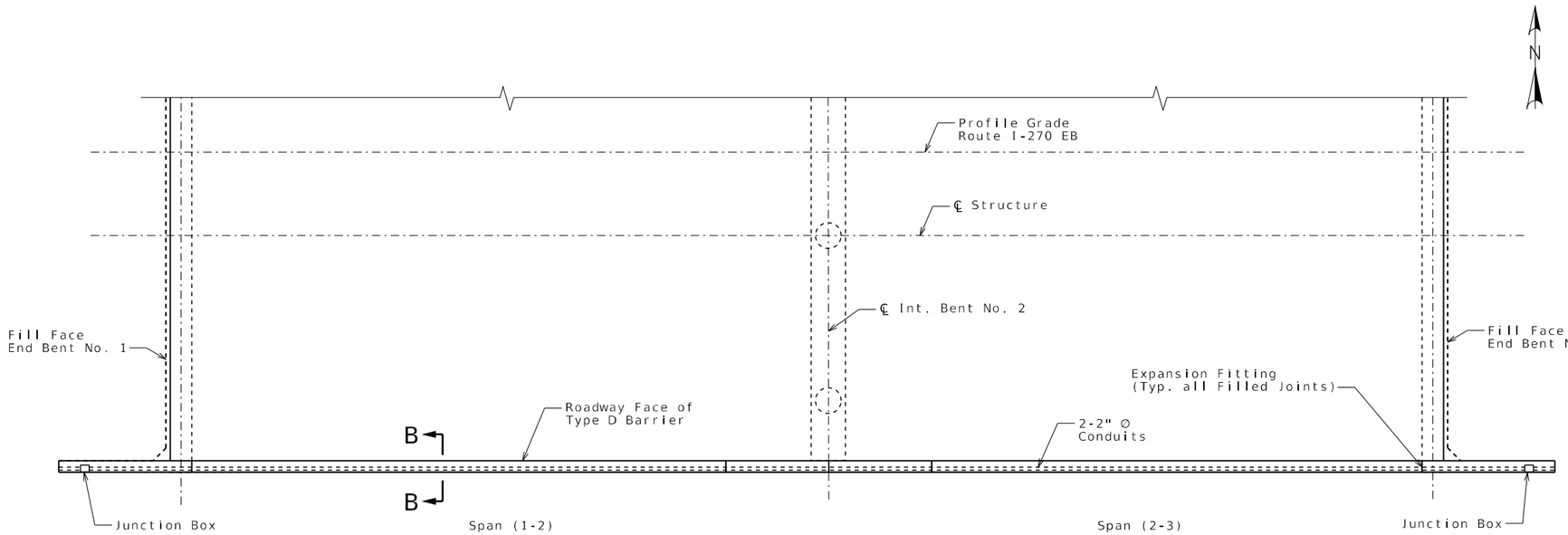

PLAN OF CONDUIT SYSTEM

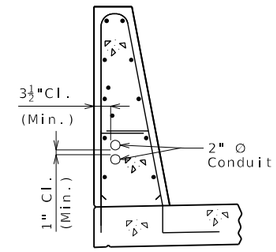

SECTION B-B
(Right barrier)

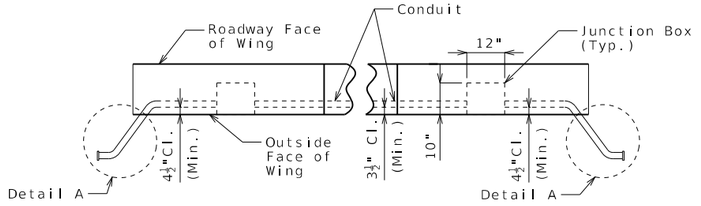

PART PLAN OF BARRIER SHOWING
DELINEATED CONDUIT SYSTEM PLACEMENT

(Single conduit shown, multiple conduits similar.)
(Expansion fitting and deflection coupling not shown for clarity.)

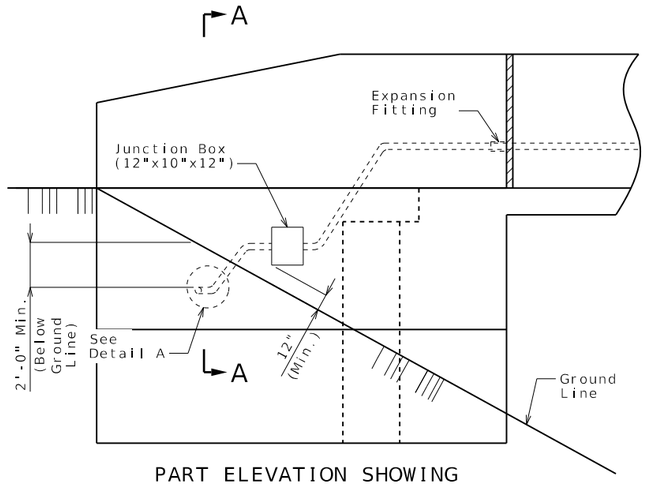

PART ELEVATION SHOWING
JUNCTION BOX IN WING

(Single conduit shown, multiple conduits similar.)

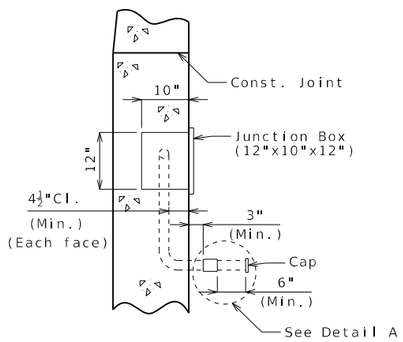

PART SECTION A-A

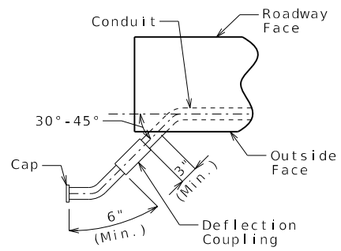

DETAIL A

Notes:

All conduits shall be rigid, nonmetallic, Schedule 40, heavy wall polyvinyl chloride (PVC) with 3 1/2" minimum cover in barrier and 4 1/2" minimum cover in abutment wing. Each section of conduit shall bear the Underwriters Laboratories (UL) label.

Shift reinforcing steel in field where necessary to clear conduit and junction boxes.

Expansion fittings shall be placed as shown and set in accordance with the manufacturer's requirements and based on the air temperature at the time of setting given an estimated total expansion movement of 1 inch at closed joints using a maximum temperature range of 120°F and a maximum temperature of 110°F.

Minimum clearance between conduits placed in barrier shall be 1".

All junction boxes shall be PVC molded in accordance with Sec 1062 and designed for flush mounting. The conduit terminations shall be permanent or separable. The terminations and covers shall be of watertight construction and shall meet requirements for NEMA 4 or NEMA 4X enclosures.

Drainage shall be provided at low points or other critical locations of all conduits and all junction boxes in accordance with Sec 707. All conduits shall be sloped to drain where possible.

Junction box size shown on plan may require special order. Smaller junction box may be substituted if junction box meets conduit installation, clearance and project requirements.

MoDOT Construction Personnel: Indicate in field and on bridge plans for future work the exact location of buried conduit at ends of bridge that are capped and not immediately used.

Payment for furnishing and installing Conduit System, complete in place, will be considered completely covered by the contract lump sum price for Conduit System on Structure.

CONDUIT SYSTEM DETAILS

Detailed September 2025
Checked September 2025

Note: This drawing is not to scale. Follow dimensions.

STATE OF MISSOURI
RYAN DAVID SHAW
NUMBER PE-2017000366
PROFESSIONAL ENGINEER
THIS SHEET HAS BEEN SIGNED, SEALED AND DATED ELECTRONICALLY

DATE PREPARED	4/1/2026
ROUTE I-270	STATE MO
DISTRICT BR	SHEET NO. 31
COUNTY	ST. LOUIS
JOB NO.	JSL0021
CONTRACT ID.	
PROJECT NO.	
BRIDGE NO.	A9489

DESCRIPTION

DATE

MISSOURI HIGHWAYS AND TRANSPORTATION COMMISSION
MoDOT
105 WEST CAPITOL
JEFFERSON CITY, MO 65102
1-888-ASK-MODOT (1-888-275-6636)

HDR Engineering, Inc.
1001 Highlands Plaza Drive
Suite 200
St. Louis, MO 63110
314-425-8300
Certificate of Authority: 000856

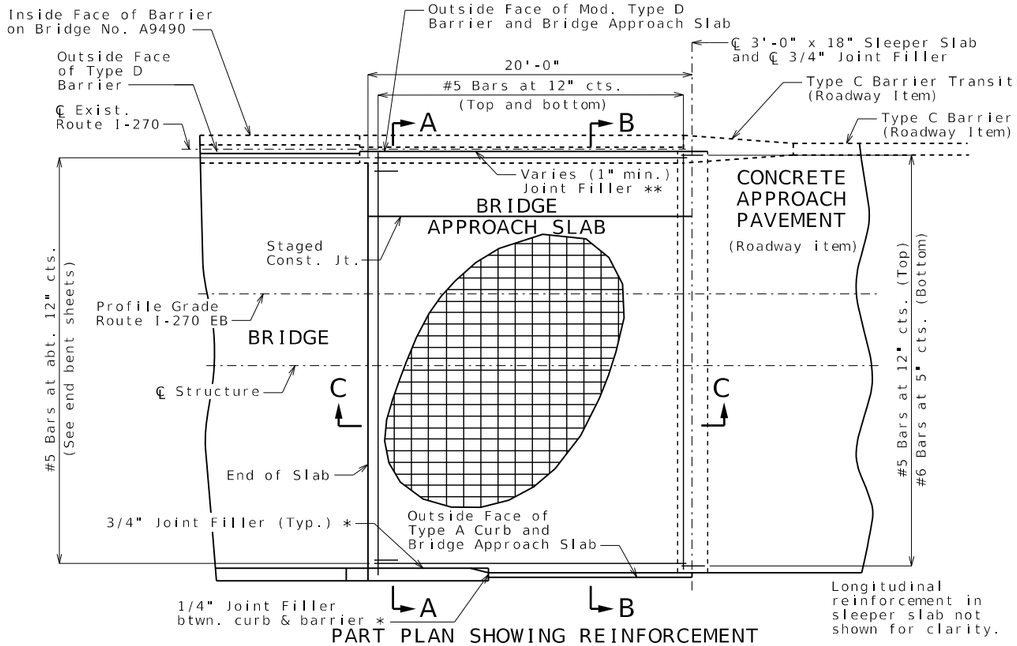

PART PLAN SHOWING REINFORCEMENT

(Approach Slab at End Bent No. 3 shown, Approach Slab at End Bent No. 1 similar)

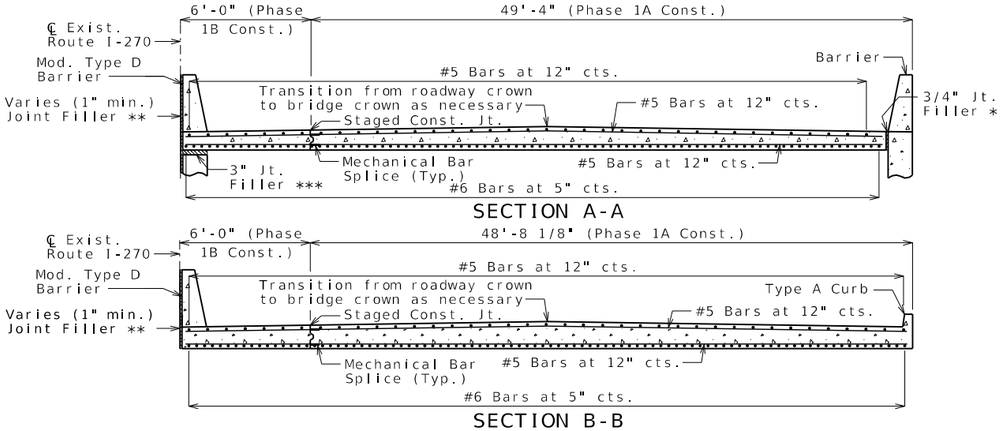

SECTION A-A

SECTION B-B

With the approval of the engineer, the contractor may crown the bottom of the approach slab to match the crown of the roadway surface.

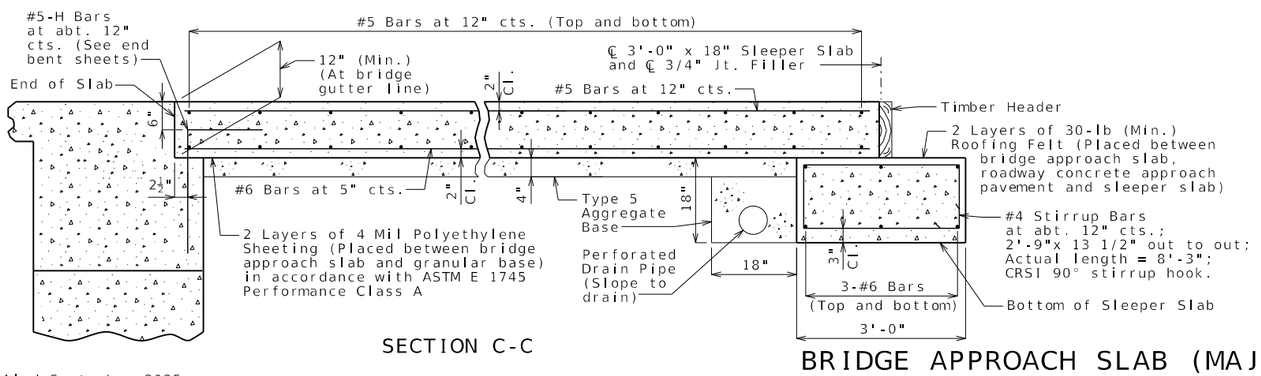

SECTION C-C

BRIDGE APPROACH SLAB (MAJOR)

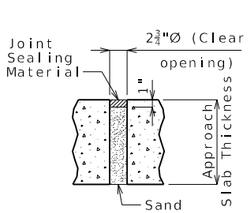

UNDERSEAL ACCESS HOLE DETAIL

(If required)

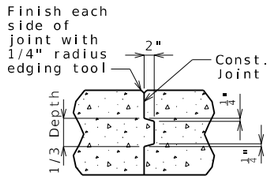

CONSTRUCTION JOINT DETAIL

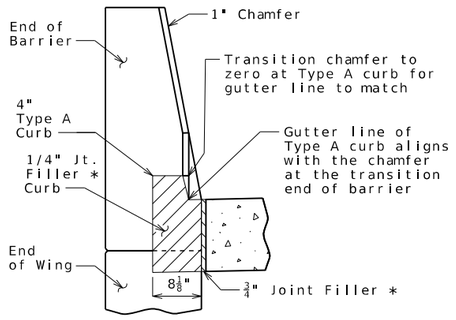

SECTION BETWEEN CURB AND BARRIER

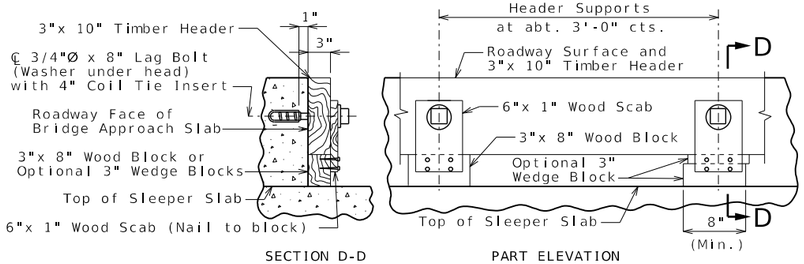

SECTION D-D PART ELEVATION

DETAILS OF TIMBER HEADER

Remove timber header when concrete pavement is placed.

General Notes:

All concrete for the bridge approach slab and sleeper slab shall be in accordance with Sec 503 (f'c = 4,000 psi).

The reinforcing steel in the bridge approach slab and the sleeper slab shall be galvanized Grade 60 with fy = 60,000 psi.

Drain pipe may be either 6" diameter corrugated metallic-coated pipe underdrain, 4" diameter corrugated polyvinyl chloride (PVC) drain pipe, or 4" diameter corrugated polyethylene (PE) drain pipe.

Minimum clearance to reinforcing steel shall be 1 1/2", unless otherwise shown.

The reinforcing steel in the bridge approach slab and the sleeper slab shall be continuous. The transverse reinforcing steel may be made continuous by providing a minimum lap splice of 24 inches for #5 bars and 40 inches for #6 bars, or by mechanical bar splice.

Mechanical bar splices shall be in accordance with Sec 710 (Estimated 48 splices per slab).

All joint filler shall be in accordance with Sec 1057 for preformed fiber expansion joint filler except as noted.

The contractor shall pour and satisfactorily finish the bridge slab before placing the bridge approach slab.

Longitudinal construction joints in approach slab and sleeper slab shall be aligned with longitudinal construction joints in bridge slab.

For concrete approach pavement details, see roadway plans.

See Missouri Standard Plan 609.00 for details of Type A curb.

Payment for furnishing all materials, labor and excavation necessary to construct the approach slab, including the timber header, sleeper slab, underdrain, Type 5 aggregate base, joint filler and all other appurtenances and incidental work as shown on this sheet, complete in place, will be considered completely covered by the contract unit price for Bridge Approach Slab (Major) per square yard.

* Seal joint between vertical face of approach slab and wing with sealant in accordance with Sec 717 for silicone joint sealant for saw cut and formed joints.

** Seal joint between vertical faces of Mod. Type D Barriers, approach slabs and wings of Bridge No. A9489 and Bridge No. A9490 with sealant in accordance with Sec 717 for silicone joint sealant for saw cut and formed joints.

*** 3" joint filler between top of left wing wall and bottom of approach slab.

STATE OF MISSOURI
RYAN DAVID SHAW
NUMBER PE-2011000886
PROFESSIONAL ENGINEER
THIS SHEET HAS BEEN SIGNED, SEALED AND DATED ELECTRONICALLY

DATE PREPARED 4/1/2026

ROUTE	STATE
I-270	MO
DISTRICT	SHEET NO.
BR	32

COUNTY: ST. LOUIS

JOB NO.: JSL0021

CONTRACT ID.:

PROJECT NO.:

BRIDGE NO.: A9489

DATE	DESCRIPTION

MISSOURI HIGHWAYS AND TRANSPORTATION COMMISSION
105 WEST CAPITOL
JEFFERSON CITY, MO 65102
1-888-ASK-MODOT (1-888-275-6636)

HDR Engineering, Inc.
1001 Highlands Plaza Drive
Suite 200
St. Louis, MO 63110
314-425-8300
Certificate of Authority: 000856

Detailed September 2025
Checked September 2025

Note: This drawing is not to scale. Follow dimensions.

c:\pwworking\central01\d4975494\B_A9489_032_SL0021.dgn 1:40:40 PM 4/1/2026

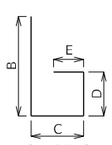

SHAPE 6
or 6S

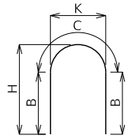

SHAPE 7

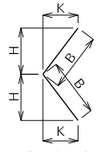

SHAPE 8
or 8S

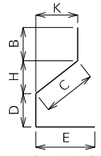

SHAPE 9
or 9S

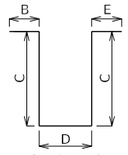

SHAPE 10
or 10S

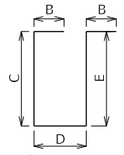

SHAPE 11
or 11S

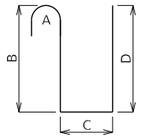

SHAPE 12

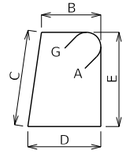

SHAPE 13S

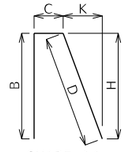

SHAPE 14
or 14S

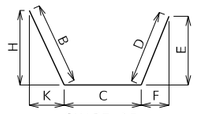

SHAPE 15
or 15S

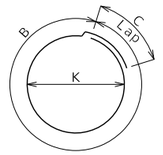

SHAPE 16

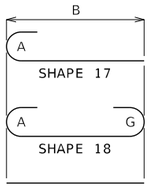

SHAPE 17
SHAPE 18
SHAPE 20

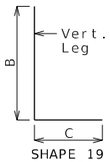

SHAPE 19
or 19S

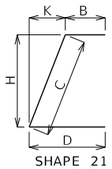

SHAPE 21
or 21S

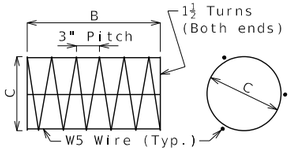

SHAPE 22

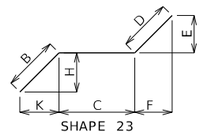

SHAPE 23
or 23S

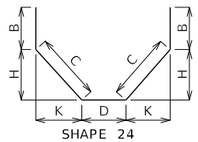

SHAPE 24
or 24S

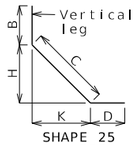

SHAPE 25
or 25S

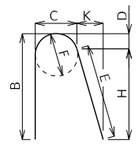

SHAPE 26

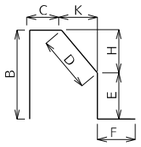

SHAPE 27S

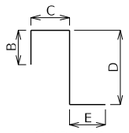

SHAPE 28
or 28S

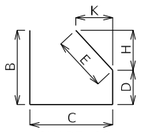

SHAPE 29
or 29S

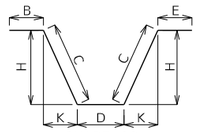

SHAPE 30
or 30S

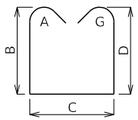

SHAPE 31S

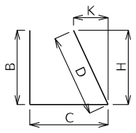

SHAPE 32
or 32S

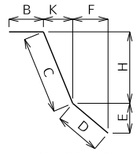

SHAPE 33
or 33S

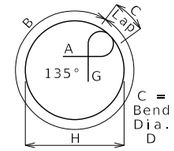

SHAPE 34S

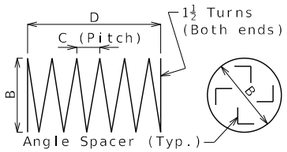

SHAPE 35 (1)

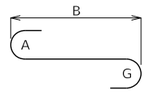

SHAPE 36

Finished Bend Diameters D and Hook Dimensions

Standard Pin Bend Shapes

Size	Case	D	A or G		J
			90°	180°	180°
#4	1	3"	8"	6"	4"
#5	1	3¾"	10"	7"	5"
#6	1	4½"	12"	8¼"	6"
#7	2	5¼"	14"	9⅜"	7"
	3	7"	15"	11½"	8¾"
#8	2	6"	16"	11"	8"
	3	8"	17"	13¼"	10"
#9	1	9½"	19½"	15½"	11¾"
#10	1	10¾"	22"	17½"	13¼"
#11	1	12"	24½"	19½"	14⅞"
#14	1	18¼"	31¼"	27½"	21⅝"
#18	1	24"	41½"	36¾"	28½"

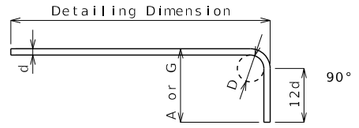

Stirrup Pin Bend Shapes (S)

Size	Case	D	A or G			H	J
			90°	135°	180°	135°	180°
#4	2	2"	4½"	4½"	5"	2⅝"	3"
	3	3"	5"	5¼"	6"	3"	4"
#5	2	2½"	5¾"	5¾"	5¾"	3⅝"	3¾"
	3	3¾"	6¼"	6½"	7"	3⅝"	5"
#6	1	4½"	12"	7¾"	8¼"	4⅝"	6"

Applicable for all grades of steel.

Case 1 applies to all reinforcement. Case 2 applies to all reinforcement except for galvanized bars. Case 3 applies to galvanized bars only.

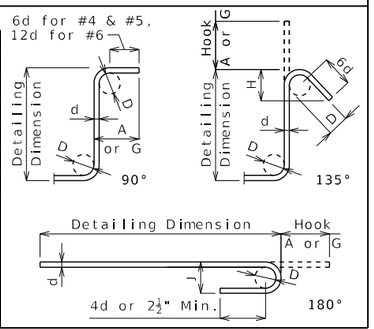

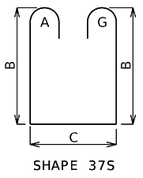

SHAPE 37S

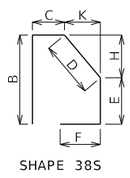

SHAPE 38S

BENDING DIAGRAMS

All dimensions are out to out.

Shapes ending with an S shall be bent in accordance with stirrup pin bend shapes.

Unless otherwise noted, finished bending diameter D is the same for all bends of a shape.

(1) Shall be a deformed or plain spiral bar or wire.

Four angle or channel spacers are required for each column spiral. Spacers are to be placed on inside of spirals. Length and weight of column spirals do not include splices or spacers.

Reinforcing Steel Totals (Pounds)

	Size	Substructure		Superstructure					Entire Bridge	
				Slab		Type D Barrier	Mod. Type D Barrier	Slip Form		
		Plain	Galv.	Plain	Galv.				Plain	Galv.
By Size	W5	0	0	0	0	0	0	0	0	0
	4	0	0	0	909	0	0	0	0	909
	5	0	7,379	0	18,891	8,306	935	350	0	35,861
	6	0	1,237	0	53,187	0	0	0	0	54,424
	7	0	0	0	3,262	0	0	0	0	3,262
	8	0	0	0	11,244	0	0	0	0	11,244
	9	0	3,814	0	0	0	0	0	0	3,814
	10	0	15,336	0	0	0	0	0	0	15,336
	11	0	0	0	0	0	0	0	0	0
	14	0	0	0	0	0	0	0	0	0
	18	0	0	0	0	0	0	0	0	0
By Type		0	27,766	0	87,493	8,306	935	350	0	124,850

All reinforcing steel shall be galvanized unless otherwise specified.

Products used to repair damaged zinc coating shall not contain aluminum.

Reinforcing steel (ASTM A706 Grade 60) fy = 60,000 psi

BENDING DIAGRAMS AND REINFORCING STEEL TOTALS

Detailed September 2025
Checked September 2025

Note: This drawing is not to scale. Follow dimensions.

STATE OF MISSOURI
RYAN DAVID SHAW
NUMBER PE-2011020068
PROFESSIONAL ENGINEER
THIS SHEET HAS BEEN SIGNED, SEALED AND DATED ELECTRONICALLY

DATE PREPARED 4/1/2026
ROUTE I-270 | STATE MO
DISTRICT BR | SHEET NO. 33
COUNTY ST. LOUIS
JOB NO. JSL0021
CONTRACT ID.
PROJECT NO.
BRIDGE NO. A9489

DESCRIPTION | DATE

MISSOURI HIGHWAYS AND TRANSPORTATION COMMISSION
105 WEST CAPITOL
JEFFERSON CITY, MO 65102
1-888-ASK-MODOT (1-888-275-6636)

HDR Engineering, Inc.
1001 Highlands Plaza Drive
Suite 200
St. Louis, MO 63110
314-425-8300
Certificate of Authority: 000856

Bill of Reinforcing Steel

No. Req.	Size/ Mark	Location	Codes C	Codes SH	Codes V	B ft in.	C ft in.	D ft in.	E ft in.	F ft in.	H ft in.	K ft in.	Nom. Length ft in.	Actual Length ft in.	Weight lb
		Substructure													
		Intermediate Bent No. 2													
8	9 H200	BEAM	G	20		52 3.00							52 3	52 3	1,421
12	6 H201	BEAM	G	20		52 3.00							52 3	52 3	942
8	9 H202	BEAM	G	18		52 3.00							54 10	54 10	1,491
8	9 H203	BEAM	G	20		33 2.00							33 2	33 2	902
34	5 U200	BEAM	G	13S		3 9.00	4 9.00	3 9.00	4 9.00				18 1	17 9	628
5	5 U201	BEAM	G	10S			4 9.00	3 9.00					13 3	13 0	68
58	5 U202	BEAM	G	13S		3 9.00	5 1.50	3 9.00	5 1.50				18 10	18 6	1,118
10	5 U203	BEAM	G	10S			5 1.50	3 9.00					14 0	13 9	143
17	6 U204	BEAM	G	10S			12.00	4 9.00					6 9	6 5	164
18	10 V200	DRILLED SHAFT	G	20		60 0.00							60 0	60 0	4,647
18	10 V201	DRILLED SHAFT	G	20		37 0.00							37 0	37 0	2,866
18	10 V202	DRILLED SHAFT	G	17		39 7.00							41 0	41 0	3,176
18	10 V203	DRILLED SHAFT	G	17		58 7.00							60 0	60 0	4,647
3	5 P200	DRILLED SHAFT	G	35		2 6.00	6.00	73 1.00					1171 7	1147 2	3,589
3	5 P201	DRILLED SHAFT	G	35		2 6.00	4.00	17 11.00					445 9	436 5	1,366
48	5 P202	BEAM	G	34S		7 10.25	3.75				2 6.00		9 4	9 4	467
35	6 D200	BEAM	G	20		2 6.00							2 6	2 6	131
		Superstructure													
		End Bent No. 1													
8	7 H100	BEAM	G	20		55 0.00							55 0	55 0	899
4	6 H101	BEAM	G	20		55 0.00							55 0	55 0	330
4	7 H102	BEAM	G	20		34 6.00							34 6	34 6	282
4	7 H103	DIAPHRAGM	G	20		55 0.00							55 0	55 0	450
2	6 H104	DIAPHRAGM	G	20		2 0.00							2 0	2 0	6
4	6 H105	DIAPHRAGM	G	20		3 4.00							3 4	3 4	20
2	6 H106	DIAPHRAGM	G	20		2 7.00							2 7	2 7	8
5	6 H107	DIAPHRAGM	G	20		6 0.00							6 0	6 0	45
10	6 H108	DIAPHRAGM	G	20		8 9.00							8 9	8 9	131
5	6 H109	DIAPHRAGM	G	20		7 2.00							7 2	7 2	54
4	6 H110	DIAPHRAGM	G	20		55 0.00							55 0	55 0	330
20	8 H111	WING	G	20		13 7.00							13 7	13 7	725
20	8 H112	WING	G	6		13 7.00	17.00						15 0	14 9	788
8	8 H113	WING	G	20		15 0.00							15 0	15 0	320
8	8 H114	WING	G	6		15 0.00	17.00						16 5	16 2	345
6	5 H115	STRAND TIE	G	20		5 9.00							5 9	5 9	36
53	5 H116	APP. NOTCH	G	19		2 0.00	15.00						3 3	3 1	170
11	5 U100	BEAM	G	37S		4 10.25	2 9.00						13 8	13 5	153
12	4 U101	BEAM	G	13S		2 9.00	2 8.00	2 9.00	2 8.00				11 9	11 5	91
17	5 U102	BEAM	G	37S		5 3.00	2 9.00						14 5	14 2	251
24	4 U103	BEAM	G	13S		2 9.00	3 0.50	2 9.00	3 0.50				12 6	12 2	195
38	5 U104	DIAPHRAGM	G	37S		3 5.50	2 3.00						10 4	10 1	400
38	6 U105	DIAPHRAGM	G	19S		2 8.50	2 9.00						5 6	5 4	304
70	6 U106	DIAPHRAGM	G	19S		2 8.50	4 2.50						6 11	6 9	710
20	5 V100	BEAM	G	17		5 3.00							5 10	5 10	122
36	6 V101	DIAPHRAGM	G	20		2 8.00							2 8	2 8	144
14	6 V102	WING	G	20		6 8.00							6 8	6 8	140
14	6 V103	WING	G	20		5 10.00							5 10	5 10	123
20	6 F100	WING	G	23		20.00	4 8.00	20.00	14.00	14.00	14.00	14.00	8 0	7 11	238
8	6 F101	WING	G	21		5 6.00	2 9.00						8 3	8 1	97
		Intermediate Bent No. 2 Diaphragm													
10	6 H250	DIAPHRAGM	G	20		6 0.00							6 0	6 0	90
20	4 H251	DIAPHRAGM	G	20		8 9.00							8 9	8 9	117
10	6 H252	DIAPHRAGM	G	20		5 2.00							5 2	5 2	78
4	5 H253	STRAND TIE	G	20		4 6.00							4 6	4 6	19
8	5 H254	STRAND TIE	G	20		5 9.00							5 9	5 9	48
8	6 U250	DIAPHRAGM	G	28S			22.00	2 7.50	22.00				6 4	6 0	72
20	6 U251	DIAPHRAGM	G	28S			2 3.00	2 7.50	22.00				6 9	6 5	193
20	6 U252	DIAPHRAGM	G	28S			2 3.00	3 3.25	22.00				7 4	7 0	210
50	4 U253	DIAPHRAGM	G	28S			2 3.00	3 3.00	15.00				6 9	6 7	220
12	5 U254	DIAPHRAGM	G	6		4 4.75	11.00	17.25					6 9	6 6	81

Bill of Reinforcing Steel

No. Req.	Size/ Mark	Location	Codes C	Codes SH	Codes V	B ft in.	C ft in.	D ft in.	E ft in.	F ft in.	H ft in.	K ft in.	Nom. Length ft in.	Actual Length ft in.	Weight lb
		Superstructure (cont.)													
		Intermediate Bent No. 2 Diaphragm (cont.)													
4	5 U255	DIAPHRAGM	G	6		4 4.75	11.00						5 4	5 2	22
8	5 V250	DIAPHRAGM	G	20		3 4.00							3 4	3 4	28
		End Bent No. 3													
8	7 H300	BEAM	G	20		55 0.00							55 0	55 0	899
4	6 H301	BEAM	G	20		55 0.00							55 0	55 0	330
4	7 H302	BEAM	G	20		34 6.00							34 6	34 6	282
4	7 H303	DIAPHRAGM	G	20		55 0.00							55 0	55 0	450
2	6 H304	DIAPHRAGM	G	20		2 0.00							2 0	2 0	6
4	6 H305	DIAPHRAGM	G	20		3 4.00							3 4	3 4	20
2	6 H306	DIAPHRAGM	G	20		2 7.00							2 7	2 7	8
5	6 H307	DIAPHRAGM	G	20		6 0.00							6 0	6 0	45
10	6 H308	DIAPHRAGM	G	20		8 9.00							8 9	8 9	131
5	6 H309	DIAPHRAGM	G	20		7 2.00							7 2	7 2	54
4	6 H310	DIAPHRAGM	G	20		55 0.00							55 0	55 0	330
20	8 H311	WING	G	20		13 7.00							13 7	13 7	725
20	8 H312	WING	G	6		13 7.00	17.00						15 0	14 9	788
8	8 H313	WING	G	20		15 0.00							15 0	15 0	320
8	8 H314	WING	G	6		15 0.00	17.00						16 5	16 2	345
6	5 H315	STRAND TIE	G	20		5 9.00							5 9	5 9	36
53	5 H316	APP. NOTCH	G	19		2 0.00	15.00						3 3	3 1	170
11	5 U300	BEAM	G	37S		4 10.25	2 9.00						13 8	13 5	153
12	4 U301	BEAM	G	13S		2 9.00	2 8.00	2 9.00	2 8.00				11 9	11 5	91
17	5 U302	BEAM	G	37S		5 3.00	2 9.00						14 5	14 2	251
24	4 U303	BEAM	G	13S		2 9.00	3 0.50	2 9.00	3 0.50				12 6	12 2	195
38	5 U304	DIAPHRAGM	G	37S		3 4.00	2 3.00						10 1	9 10	390
38	6 U305	DIAPHRAGM	G	19S		2 7.00	2 9.00						5 4	5 2	295
70	6 U306	DIAPHRAGM	G	19S		2 8.50	4 2.50						6 11	6 9	710
20	5 V300	BEAM	G	17		5 3.00							5 10	5 10	122
36	6 V301	DIAPHRAGM	G	20		2 7.00							2 7	2 7	140
14	6 V302	WING	G	20		6 3.00							6 3	6 3	131
14	6 V303	WING	G	20		5 4.00							5 4	5 4	112
20	6 F300	WING	G	23		20.00	4 8.00	20.00	14.00	14.00	14.00	14.00	8 0	7 11	238
8	6 F301	WING	G	21		5 6.00	2 9.00						8 3	8 1	97
		Slab													
159	6 S1	SLAB	G	20		51 1.00							51 1	51 1	12,200
287	5 S2	SLAB	G	20		54 11.00							54 11	54 11	16,439
138	6 S3	SLAB	G	20		50 9.00							50 9	50 9	10,519
43	8 S4	SLAB	G	20		20 0.00							20 0	20 0	2,296
43	8 S5	SLAB	G	20		40 0.00							40 0	40 0	4,592
297	6 S6	SLAB	G	20		54 11.00							54 11	54 11	24,498
		Barriers													
		Type D													
10	5 K1	BARRIER	G	27S		3 5.00	9.25	5.25	2 11.75		5.25	1.00	7 7	7 4	76
42	5 K2	BARRIER	G	27S		3 5.00	9.25	14.50	2 2.75		14.25	2.75	7 8	7 5	325
10	5 K4	BARRIER	G	19S	2	2 6.25	10.00						3 4	3 3	
		(INCR. = 1/2")				2 4.25	10.00						3 2	3 1	33
10	5 K5	BARRIER	G	38S	2			18.25	9.50	8.25	18.00	4.00	3 0	2 10	
		(INCR. = 1/2")						20.50	9.50	8.25	20.00	4.50	3 2	3 0	30
6	5 K6	BARRIER	G	19S		2 6.75	10.00						3 5	3 4	21
6	5 K7	BARRIER	G	21S			2 6.50	10.00			2 6.00	6.25	3 5	3 3	20
18	5 K8	BARRIER	G	19S	2	2 8.50	10.00						3 7	3 6	
		(INCR. = 3/4")				3 2.50	10.00						4 1	4 0	69
18	5 K9	BARRIER	G	21S	2		2 8.50	10.00			2 7.75	6.75	3 7	3 5	
		(INCR. = 3/4")					3 2.50	10.00			3 1.75	7.75	4 1	3 11	68
18	5 K10	BARRIER	G	19S		3 3.00	10.00						4 1	4 0	75
18	5 K11	BARRIER	G	21S			3 3.00	10.00			3 2.25	7.75	4 1	3 11	74
12	5 K12	BARRIER	G	20		15 3.00							15 3	15 3	191
6	5 K13	BARRIER	G	20	2	8 6.00							8 6	8 6	
		(INCR. = 3'-0")				14 6.00							14 6	14 6	72
12	5 K14	BARRIER	G	20		15 3.00							15 3	15 3	191
6	5 K15	BARRIER	G	20	2	8 6.00							8 6	8 6	
		(INCR. = 3'-0")				14 6.00							14 6	14 6	72
300	5 R1	BARRIER	G	26S		3 3.00	5.50	2.25	3 1.25	5.50	3 0.75	6.75	6 10	6 10	2,138

Nominal lengths are based on out to out dimensions shown in bending diagrams and are listed to the nearest inch for fabricator's use. Actual lengths are measured along centerline bar to the nearest inch. Weights are based on actual lengths.

For bending diagrams and steel reinforcing totals, see Sheet No. 33.

Detailed September 2025
Checked September 2025

Reinforcing steel (ASTM A706 Grade 60) fy = 60,000 psi

Codes: C = Required coatings, where E = Epoxy Coated and G = Galvanized.

SH = Required shape, see bending diagrams.

V = Sets of varied bars and number of bars of each length. Bar dimensions vary in equal increments between dimensions shown on this line and the following line and the actual length dimension shown on this line and the following line vary by the specified increment.

BILL OF REINFORCING STEEL

Note: This drawing is not to scale. Follow dimensions.

STATE OF MISSOURI
RYAN DAVID SHAW
NUMBER PE-2017000368
PROFESSIONAL ENGINEER
THIS SHEET HAS BEEN SIGNED, SEALED AND DATED ELECTRONICALLY

DATE PREPARED 4/1/2026
ROUTE I-270 | STATE MO
DISTRICT BR | SHEET NO. 34
COUNTY ST. LOUIS
JOB NO. JSL0021
CONTRACT ID.
PROJECT NO.
BRIDGE NO. A9489

DESCRIPTION
DATE

MISSOURI HIGHWAYS AND TRANSPORTATION COMMISSION
105 WEST CAPITOL
JEFFERSON CITY, MO 65102
1-888-ASK-MODOT (1-888-275-6636)

HDR Engineering, Inc.
1001 Highlands Plaza Drive
Suite 200
St. Louis, MO 63110
314-425-8300
Certificate of Authority: 000856

c:\pwworking\central01\d4975494\B_A9489_034_SL0021.dgn 1:40:54 PM 4/1/2026

Bill of Reinforcing Steel

No. Req.	Size/ Mark	Location	Codes C	Codes SH	Codes V	Dimensions B ft in.	Dimensions C ft in.	Dimensions D ft in.	Dimensions E ft in.	Dimensions F ft in.	Dimensions H ft in.	Dimensions K ft in.	Nom. Length ft in.	Actual Length ft in.	Weight lb
		Superstructure (cont.)													
		Type D (cont.)													
300	5 R2	BARRIER	G	19S		20.50	9.50						2 6	2 5	756
300	5 R3	BARRIER	G	27S			9.50	15.25	5.00	12.00	15.00	3.00	3 6	3 3	1,017
40	5 R4	BARRIER	G	20		11 9.00							11 9	11 9	490
20	5 R5	BARRIER	G	20		33 6.00							33 6	33 6	699
10	5 R6	BARRIER	G	20		59 6.00							59 6	59 6	621
20	5 R7	BARRIER	G	20		32 3.00							32 3	32 3	673
10	5 R8	BARRIER	G	20		57 0.00							57 0	57 0	595
		Modified Type D													
42	5 M1	MODIFIED BARRIER	G	26S		3 3.00	6.50	2.25	3 1.25	6.50	3 0.75	6.75	6 11	6 11	303
42	5 M2	MODIFIED BARRIER	G	19S		20.50	10.50						2 7	2 6	110
42	5 M3	MODIFIED BARRIER	G	27S			10.50	15.25	5.00		15.00	3.00	2 7	2 6	110
20	5 M4	MODIFIED BARRIER	G	20		19 9.00							19 9	19 9	412
		Slip Form													
28	5 C1	SLIP FORM	G	20		12 0.00							12 0	12 0	350

Bill of Reinforcing Steel

No. Req.	Size/ Mark	Location	Codes C	Codes SH	Codes V	Dimensions B ft in.	Dimensions C ft in.	Dimensions D ft in.	Dimensions E ft in.	Dimensions F ft in.	Dimensions H ft in.	Dimensions K ft in.	Nom. Length ft in.	Actual Length ft in.	Weight lb

Nominal lengths are based on out to out dimensions shown in bending diagrams and are listed to the nearest inch for fabricator's use. Actual lengths are measured along centerline bar to the nearest inch. Weights are based on actual lengths.

For bending diagrams and steel reinforcing totals, see Sheet No. 33.

Detailed September 2025
Checked September 2025

Reinforcing steel (ASTM A706 Grade 60) fy = 60,000 psi

BILL OF REINFORCING STEEL

Note: This drawing is not to scale. Follow dimensions.

Sheet No. 35 of 40

Codes: C = Required coatings, where E = Epoxy Coated and G = Galvanized.

SH = Required shape, see bending diagrams.

V = Sets of varied bars and number of bars of each length. Bar dimensions vary in equal increments between dimensions shown on this line and the following line and the actual length dimension shown on this line and the following line vary by the specified increment.

STATE OF MISSOURI
RYAN DAVID SHAW
NUMBER PE-2017000366
PROFESSIONAL ENGINEER

THIS SHEET HAS BEEN SIGNED, SEALED AND DATED ELECTRONICALLY

DATE PREPARED 4/1/2026

ROUTE I-270 | STATE MO

DISTRICT BR | SHEET NO. 35

COUNTY ST. LOUIS

JOB NO. JSL0021

CONTRACT ID.

PROJECT NO.

BRIDGE NO. A9489

DESCRIPTION

DATE

MISSOURI HIGHWAYS AND TRANSPORTATION COMMISSION

MoDOT

105 WEST CAPITOL
JEFFERSON CITY, MO 65102
1-888-ASK-MODOT (1-888-275-6636)

HDR Engineering, Inc.
1001 Highlands Plaza Drive
Suite 200
St. Louis, MO 63110
314-425-8300
Certificate of Authority: 000856

c:\pwworking\central01\d4975494\B_A9489_035_SL0021.dgn 1:41:01 PM 4/1/2026

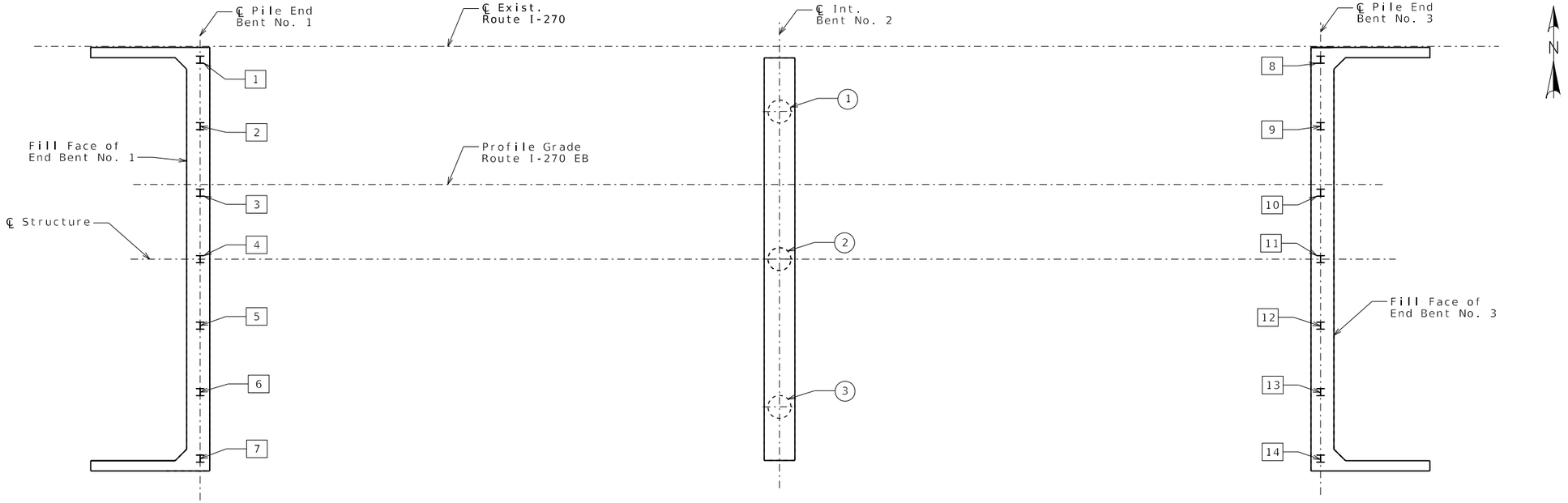

PART PLAN SHOWING PILE & DRILLED SHAFT NUMBERING FOR RECORDING AS-BUILT PILE DATA & AS-BUILT DRILLED SHAFT DATA

As-Built Pile Data

Pile No.	Length in Place (ft)	Computed Nominal Axial Compressive Resistance (kips)	Remarks
			End Bent No. 1
1			
2			
3			
4			
5			
6			
7			

As-Built Drilled Shaft Data

Shaft No.	Top of Sound Rock (Elev.)	Tip of Casing (Elev.)	Bottom of Rock Socket (Elev.)	Remarks
				Int. Bent No. 2
1				
2				
3				

Note:
Indicate in remarks column:
A. Pile type and grade
B. Batter
C. Driven to practical refusal

This sheet to be completed by MoDOT construction personnel.

As-Built Pile Data

Pile No.	Length in Place (ft)	Computed Nominal Axial Compressive Resistance (kips)	Remarks
			End Bent No. 3
8			
9			
10			
11			
12			
13			
14			

AS-BUILT PILE & DRILLED SHAFT DATA

Detailed September 2025
Checked September 2025

Note: This drawing is not to scale. Follow dimensions.

STATE OF MISSOURI
RYAN DAVID SHAW
NUMBER PE-2017000366
PROFESSIONAL ENGINEER
THIS SHEET HAS BEEN SIGNED, SEALED AND DATED ELECTRONICALLY

DATE PREPARED	4/1/2026
ROUTE	I-270
STATE	MO
DISTRICT	BR
SHEET NO.	36
COUNTY	ST. LOUIS
JOB NO.	JSL0021
CONTRACT ID.	
PROJECT NO.	
BRIDGE NO.	A9489

DESCRIPTION

DATE

MISSOURI HIGHWAYS AND TRANSPORTATION COMMISSION
105 WEST CAPITOL
JEFFERSON CITY, MO 65102
1-888-ASK-MODOT (1-888-275-6636)

HDR Engineering, Inc.
1001 Highlands Plaza Drive
Suite 200
St. Louis, MO 63110
314-425-8300
Certificate of Authority: 000856

Missouri Department of Transportation
Construction and Materials

BORING NO. A9489-101
Page 1 of 2

Job No.: MG24029 **County:** St. Louis **Route:** Route 367
Design: **Skew:** **Location:** St. Louis County, Missouri
Bent: **Logged By:** B. Nepal **Operator:** G. Shetley
Station: **Northing:** 1069608.162 **Date of Work:** 05/22/24-05/22/24
Offset: **Easting:** 894708.807 **Depth to Water:** 18.0
Elevation: 553.5 **Requested Northing:** **Depth Hole Open:**
Requested Station: **Requested Easting:** **Time Change:**
Requested Offset: **Equipment:** CME 750Y ,Split-Spoon Sampler, Shelby Tube, NQ
Requested Elevation: **Location Note:**
Drill No.: UES **Hammer Efficiency:** 95% **Drilling Method:** Hollow Stem Auger

Depth (ft)	Graphic	Description	Elevation (ft)	Sample Type	REC % (RQD %)	Blow Counts (N_{60})	Shear Data	Field Tests	Index Tests
0		0.0-0.5' ASPHALT (6.0")							
		0.5-1.0' CONCRETE (6.0")							
		1.0-17.0' Light grey and brown, lean CLAY (CL), mottled black	550		100		Qu Test Results UCS = 1.72 ksf MC = 27.6% γ_{moist} = 125.4 pcf	PP = 3.50 tsf	LL = 37 PL = 22 MC = 27.6%
5									
			545		94	2-2-3 (8)		PP = 2.00 tsf	MC = 26.9%
10									
			540		100	2-2-3 (8)		PP = 1.50 tsf	MC = 24.0%
15									
		17.0-22.0' Grey and brown, fat CLAY (CH)	535		100		Qu Test Results UCS = 2.36 ksf MC = 22.9% γ_{moist} = 127.35 pcf	PP = 2.50 tsf	LL = 56 PL = 16 MC = 22.9%
20									
		22.0-27.0' Grey and brown, lean CLAY (CL), with fine sand	530		100	3-4-6 (16)		PP = 3.50 tsf	MC = 24.0%
25									
		27.0-42.0' Light grey and brown, lean CLAY (CL), trace sand	525		100	2-3-3 (10)		PP = 1.00 tsf	MC = 29.6%
30									
			520		100	2-3-4 (11)		PP = 2.50 tsf	MC = 28.3%
35									

N_{60} = (Em/60)Nm N_{60} - Corrected N value for standard 60% SPT efficiency; Em - Measured hammer efficiency in percent; Nm - Observed N-value; (1) = Assumed, (2) = Actual

Coordinate System: **Coordinate Zone:** **Coordinate Proj. Factor:**
Coordinate Datum: **Coordinate Units:** U.S. Survey Feet

* Persons using this information are cautioned that the materials shown are determined by the equipment noted and accuracy of the "log of materials" is limited thereby and by judgement of the operator. THIS INFORMATION IS FOR DESIGN PURPOSES ONLY.

LETTER BOREHOLE - MODOT_20151118.GDT - 1/13/25 08:57 - G:\PROJECT FILES\2024\MG24029 I-270 GAP FROM ROUTE 367 TO LILAC AVENUE\FIELD DATA\ROUTE 367\I-270 ROUTE 367 MODOT GINT LOGS.GPJ

Missouri Department of Transportation
Construction and Materials

BORING NO. A9489-101
Page 2 of 2

Job No.: MG24029 **County:** St. Louis **Route:** Route 367
Design: **Skew:** **Location:** St. Louis County, Missouri
Bent: **Logged By:** B. Nepal **Operator:** G. Shetley
Station: **Northing:** 1069608.162 **Date of Work:** 05/22/24-05/22/24
Offset: **Easting:** 894708.807 **Depth to Water:** 18.0
Elevation: 553.5 **Requested Northing:** **Depth Hole Open:**
Requested Station: **Requested Easting:** **Time Change:**
Requested Offset: **Equipment:** CME 750Y ,Split-Spoon Sampler, Shelby Tube, NQ
Requested Elevation: **Location Note:**
Drill No.: UES **Hammer Efficiency:** 95% **Drilling Method:** Hollow Stem Auger

Depth (ft)	Graphic	Description	Elevation (ft)	Sample Type	REC % (RQD %)	Blow Counts (N_{60})	Shear Data	Field Tests	Index Tests
35		27.0-42.0' Light grey and brown, lean CLAY (CL), trace sand *(continued)*	515		100	2-3-3 (10)		PP = 1.25 tsf	MC = 33.6%
40									
		42.0-47.0' Light grey and brown, lean to fat CLAY (CL-CH), trace sand	510		100	4-7-8 (24)		PP = 3.50 tsf	MC = 16.4%
45									
		47.0-49.0' Weathered SHALE	505		100	50/0.3'		PP = 3.00 tsf	MC = 15.5%
50		49.0-59.0' Brown with orange and black, SANDSTONE AND SILTSTONE, moderately weathered, soft, very finely crystalline to aphanitic, slightly to moderately fractured			100	(0)			
		53.3' - compressive strength = 1,356 psi	500		98	(55)			
55									
			495		100	(71)			
		Refusal at 48.9 feet. Bottom of borehole at 59.0 feet.							

N_{60} = (Em/60)Nm N_{60} - Corrected N value for standard 60% SPT efficiency; Em - Measured hammer efficiency in percent; Nm - Observed N-value; (1) = Assumed, (2) = Actual

Coordinate System: **Coordinate Zone:** **Coordinate Proj. Factor:**
Coordinate Datum: **Coordinate Units:** U.S. Survey Feet

* Persons using this information are cautioned that the materials shown are determined by the equipment noted and accuracy of the "log of materials" is limited thereby and by judgement of the operator. THIS INFORMATION IS FOR DESIGN PURPOSES ONLY.

LETTER BOREHOLE - MODOT_20151118.GDT - 1/13/25 08:57 - G:\PROJECT FILES\2024\MG24029 I-270 GAP FROM ROUTE 367 TO LILAC AVENUE\FIELD DATA\ROUTE 367\I-270 ROUTE 367 MODOT GINT LOGS.GPJ

STATE OF MISSOURI
RYAN DAVID SHAW
NUMBER PE-2011000886
PROFESSIONAL ENGINEER
THIS SHEET HAS BEEN SIGNED, SEALED AND DATED ELECTRONICALLY

DATE PREPARED
4/1/2026

ROUTE	STATE
I-270	MO
DISTRICT	SHEET NO.
BR	37

COUNTY
ST. LOUIS

JOB NO.
JSL0021

CONTRACT ID.

PROJECT NO.

BRIDGE NO.
A9489

DESCRIPTION

DATE

MISSOURI HIGHWAYS AND TRANSPORTATION COMMISSION
105 WEST CAPITOL
JEFFERSON CITY, MO 65102
1-888-ASK-MODOT (1-888-275-6636)

HDR Engineering, Inc.
1001 Highlands Plaza Drive
Suite 200
St. Louis, MO 63110
314-425-8300
Certificate of Authority: 000856

BORING DATA

Note: For location of borings, see Sheet No. 1.

Detailed September 2025
Checked September 2025

Note: This drawing is not to scale. Follow dimensions.

c:\pwworking\central01\d4975494\B_A9489_037_SL0021.dgn 1:41:15 PM 4/1/2026

Missouri Department of Transportation
Construction and Materials

BORING NO. A9489-201
Page 1 of 3

Job No.: MG24029 **County:** St. Louis **Route:** Route 367
Design: **Skew:** **Location:** St. Louis County, Missouri
Bent: **Logged By:** B. Nepal **Operator:** G. Shetley
Station: **Northing:** 1069610.776 **Date of Work:** 05/20/24-05/20/24
Offset: **Easting:** 894757.588 **Depth to Water:** 48.0
Elevation: 554.2 **Requested Northing:** **Depth Hole Open:**
Requested Station: **Requested Easting:** **Time Change:**
Requested Offset: **Equipment:** CME 750Y ,Split-Spoon Sampler, NQ
Requested Elevation: **Location Note:**
Drill No.: UES **Hammer Efficiency:** 95% **Drilling Method:** Hollow Stem Auger

Depth (ft)	Graphic	Description	Elevation (ft)	Sample Type	REC % (RQD %)	Blow Counts (N_{60})	Shear Data	Field Tests	Index Tests
0		0.0-0.5' ASPHALT (6.0")							
		0.5-1.0' CONCRETE (6.0")							
		1.0-22.0' Light grey and brown, lean CLAY (CL)							
			550						
5					50	5-3-3 (10)		PP = 1.00 tsf	MC = 29.1%
			545						
10					50	7-4-4 (13)		PP = 1.00 tsf	MC = 26.7%
		12.0' - brown, trace wet clay pockets and trace mottled black below 12 ft.							
			540						
15					67	3-3-2 (8)		PP = 1.00 tsf	MC = 26.4%
			535						
20					100	1-3-3 (10)		PP = 2.00 tsf	MC = 25.4%
		22.0-37.0' - Light grey and brown, lean to fat CLAY (CL-CH), trace chert & gravel							
			530						
25					100	4-6-8 (22)		PP = 3.00 tsf	MC = 22.3%
		27.0' - no chert below 27 ft.							
			525						
30					100	3-4-4 (13)		PP = 2.50 tsf	MC = 21.5%
		32.0' - no gravel below 32 ft.							
			520						
35					100	3-5-6 (17)		PP = 3.00 tsf	MC = 20.8%

N_{60} = (Em/60)Nm N_{60} - Corrected N value for standard 60% SPT efficiency; Em - Measured hammer efficiency in percent; Nm - Observed N-value; (1) = Assumed, (2) = Actual

Coordinate System: **Coordinate Zone:** **Coordinate Proj. Factor:**
Coordinate Datum: **Coordinate Units:** U.S. Survey Feet

* Persons using this information are cautioned that the materials shown are determined by the equipment noted and accuracy of the "log of materials" is limited thereby and by judgement of the operator. THIS INFORMATION IS FOR DESIGN PURPOSES ONLY.

LETTER BOREHOLE - MODOT_20151118.GDT - 1/13/25 08:57 - G:\PROJECT FILES\2024\MG24C29 I-270 GAP FROM ROUTE 367 TO LILAC AVENUE\FIELD DATA\ROUTE 367\I-270 ROUTE 367 MODOT GINT LOGS.GPJ

Missouri Department of Transportation
Construction and Materials

BORING NO. A9489-201
Page 2 of 3

Job No.: MG24029 **County:** St. Louis **Route:** Route 367
Design: **Skew:** **Location:** St. Louis County, Missouri
Bent: **Logged By:** B. Nepal **Operator:** G. Shetley
Station: **Northing:** 1069610.776 **Date of Work:** 05/20/24-05/20/24
Offset: **Easting:** 894757.588 **Depth to Water:** 48.0
Elevation: 554.2 **Requested Northing:** **Depth Hole Open:**
Requested Station: **Requested Easting:** **Time Change:**
Requested Offset: **Equipment:** CME 750Y ,Split-Spoon Sampler, NQ
Requested Elevation: **Location Note:**
Drill No.: UES **Hammer Efficiency:** 95% **Drilling Method:** Hollow Stem Auger

Depth (ft)	Graphic	Description	Elevation (ft)	Sample Type	REC % (RQD %)	Blow Counts (N_{60})	Shear Data	Field Tests	Index Tests
35		22.0-37.0' - Light grey and brown, lean to fat CLAY (CL-CH), trace chert & gravel *(continued)*							
		37.0-47.0' Light grey and brown, fat CLAY (CH), mottled black	515		100	3-6-6 (19)		PP = 3.50 tsf	MC = 28.1%
40									
			510		100	2-2-3 (8)		PP = 2.00 tsf	MC = 28.5%
45									
		47.0-49.5' Weathered SHALE	505		100	11-50/0.4'		PP = 2.00 tsf	MC = 17.2%
50		49.5-79.5' Brown, SANDSTONE AND SILTSTONE, moderately weathered, soft, very finely crystalline to aphanitic, slightly to moderately fractured			67 (3)				
			500		80 (3)				
55		54.5' - compressive strength = 2,809 psi							
		56.5' - compressive strength = 2,662 psi							
		57.5' - compressive strength = 2,824 psi			100 (95)				
		58.2' - compressive strength = 2,876 psi	495						
60									
		61.0' - compressive strength = 2,892 psi							
		61.5' - compressive strength = 2,834 psi							
		62.5' - compressive strength = 2,913 psi			100 (85)				
		63.0' - compressive strength = 2,596 psi	490						
65									
		66.5' - grey, argillaceous, slightly weathered, soft to moderately hard, slightly fractured below 66.5 ft.							
		67.0' - compressive strength = 3,569 psi			99 (92)				
		69.0' - compressive strength = 3,838 psi	485						
70									

N_{60} = (Em/60)Nm N_{60} - Corrected N value for standard 60% SPT efficiency; Em - Measured hammer efficiency in percent; Nm - Observed N-value; (1) = Assumed, (2) = Actual

Coordinate System: **Coordinate Zone:** **Coordinate Proj. Factor:**
Coordinate Datum: **Coordinate Units:** U.S. Survey Feet

* Persons using this information are cautioned that the materials shown are determined by the equipment noted and accuracy of the "log of materials" is limited thereby and by judgement of the operator. THIS INFORMATION IS FOR DESIGN PURPOSES ONLY.

LETTER BOREHOLE - MODOT_20151118.GDT - 1/13/25 08:57 - G:\PROJECT FILES\2024\MG24029 I-270 GAP FROM ROUTE 367 TO LILAC AVENUE\FIELD DATA\ROUTE 367\I-270 ROUTE 367 MODOT GINT LOGS.GPJ

BORING DATA

Note: For location of borings, see Sheet No. 1.

Detailed September 2025
Checked September 2025

Note: This drawing is not to scale. Follow dimensions.

Sheet No. 38 of 40

STATE OF MISSOURI
RYAN DAVID SHAW
NUMBER PE-2017003886
PROFESSIONAL ENGINEER
THIS SHEET HAS BEEN SIGNED, SEALED AND DATED ELECTRONICALLY

DATE PREPARED 4/1/2026
ROUTE I-270 | STATE MO
DISTRICT BR | SHEET NO. 38
COUNTY ST. LOUIS
JOB NO. JSL0021
CONTRACT ID.
PROJECT NO.
BRIDGE NO. A9489

DESCRIPTION | DATE

MISSOURI HIGHWAYS AND TRANSPORTATION COMMISSION
105 WEST CAPITOL
JEFFERSON CITY, MO 65102
1-888-ASK-MODOT (1-888-275-6636)

HDR Engineering, Inc.
1001 Highlands Plaza Drive
Suite 200
St. Louis, MO 63110
314-425-8300
Certificate of Authority: 000856

Missouri Department of Transportation
Construction and Materials

BORING NO. A9489-201
Page 3 of 3

Job No.: MG24029 **County:** St. Louis **Route:** Route 367
Design: **Skew:** **Location:** St. Louis County, Missouri
Bent: **Logged By:** B. Nepal **Operator:** G. Shetley
Station: **Northing:** 1069610.776 **Date of Work:** 05/20/24-05/20/24
Offset: **Easting:** 894757.588 **Depth to Water:** 48.0
Elevation: 554.2 **Requested Northing:** **Depth Hole Open:**
Requested Station: **Requested Easting:** **Time Change:**
Requested Offset: **Equipment:** CME 750Y ,Split-Spoon Sampler, NQ
Requested Elevation: **Location Note:**
Drill No.: UES **Hammer Efficiency:** 95% **Drilling Method:** Hollow Stem Auger

Depth (ft)	Graphic	Description	Elevation (ft)	Sample Type	REC % (RQD %)	Blow Counts (N_{60})	Shear Data	Field Tests	Index Tests
70									
75		49.5-79.5' Brown, SANDSTONE AND SILTSTONE, moderately weathered, soft, very finely crystalline to aphanitic, slightly to moderately fractured *(continued)* 70.5' - compressive strength = 4,053 psi 71.7' - compressive strength = 3,756 psi	480		100 (100)				
		74.7' - compressive strength = 3,579 psi	475		100 (95)				
		Refusal at 49.4 feet. Bottom of borehole at 79.5 feet.							

N_{60} = (Em/60)Nm N_{60} - Corrected N value for standard 60% SPT efficiency; Em - Measured hammer efficiency in percent; Nm - Observed N-value; (1) = Assumed, (2) = Actual

Coordinate System: **Coordinate Zone:** **Coordinate Proj. Factor:**
Coordinate Datum: **Coordinate Units:** U.S. Survey Feet

* Persons using this information are cautioned that the materials shown are determined by the equipment noted and accuracy of the "log of materials" is limited thereby and by judgement of the operator. THIS INFORMATION IS FOR DESIGN PURPOSES ONLY.

LETTER BOREHOLE - MODOT_20151118.GDT - 1/13/25 08:57 - G:\PROJECT FILES\20241\MG24029 I-270 GAP FROM ROUTE 367 TO LILAC AVENUE\FIELD DATA\ROUTE 367\I-270 ROUTE 367 MODOT GINT LOGS.GPJ

Missouri Department of Transportation
Construction and Materials

BORING NO. A9489-301
Page 1 of 2

Job No.: MG24029 **County:** St. Louis **Route:** Route 367
Design: **Skew:** **Location:** St. Louis County, Missouri
Bent: **Logged By:** B. Nepal **Operator:** G. Shetley
Station: **Northing:** 1069602.896 **Date of Work:** 05/15/24-05/15/24
Offset: **Easting:** 894804.596 **Depth to Water:** 18.0
Elevation: 552.0 **Requested Northing:** **Depth Hole Open:**
Requested Station: **Requested Easting:** **Time Change:**
Requested Offset: **Equipment:** CME 750Y ,Split-Spoon Sampler, Shelby Tube, NQ
Requested Elevation: **Location Note:**
Drill No.: UES **Hammer Efficiency:** 95% **Drilling Method:** Hollow Stem Auger

Depth (ft)	Graphic	Description	Elevation (ft)	Sample Type	REC % (RQD %)	Blow Counts (N_{60})	Shear Data	Field Tests	Index Tests
0		0.0-0.4' CONCRETE (5.0") 0.4-17.0' Grey and brown, lean CLAY (CL)	550						
5					100	2-2-3 (8)		PP = 1.00 tsf	MC = 30.8%
			545						
10					100	1-2-3 (8)		PP = 0.50 tsf	MC = 28.4%
			540						
15		13.0' - UU test performed at 13.0 ft.: shear strength = 0.89 tsf dry density = 98.5 pcf			100			PP = 2.00 tsf	MC = 25.3%
			535						
20		▽ 17.0-27.0' Light brown, fat CLAY (CH), mottled black			100	2-2-5 (11)		PP = 2.00 tsf	MC = 28.6%
			530						
25					100	4-5-6 (17)		PP = 4.50 tsf	MC = 21.9%
			525						
30		27.0-42.0' Light grey and brown, lean CLAY (CL), trace sand			100	4-5-5 (16)		PP = 2.00 tsf	MC = 25.8%
			520						
35		33.5' - more plastic below 33.5 ft.			100	3-3-5 (13)		PP = 2.00 tsf	MC = 28.8%

N_{60} = (Em/60)Nm N_{60} - Corrected N value for standard 60% SPT efficiency; Em - Measured hammer efficiency in percent; Nm - Observed N-value; (1) = Assumed, (2) = Actual

Coordinate System: **Coordinate Zone:** **Coordinate Proj. Factor:**
Coordinate Datum: **Coordinate Units:** U.S. Survey Feet

* Persons using this information are cautioned that the materials shown are determined by the equipment noted and accuracy of the "log of materials" is limited thereby and by judgement of the operator. THIS INFORMATION IS FOR DESIGN PURPOSES ONLY.

LETTER BOREHOLE - MODOT_20151118.GDT - 1/13/25 08:57 - G:\PROJECT FILES\20241\MG24029 I-270 GAP FROM ROUTE 367 TO LILAC AVENUE\FIELD DATA\ROUTE 367\I-270 ROUTE 367 MODOT GINT LOGS.GPJ

RYAN DAVID SHAW
NUMBER PE-2011003886
PROFESSIONAL ENGINEER
STATE OF MISSOURI
THIS SHEET HAS BEEN SIGNED, SEALED AND DATED ELECTRONICALLY

DATE PREPARED 4/1/2026
ROUTE I-270 | STATE MO
DISTRICT BR | SHEET NO. 39
COUNTY ST. LOUIS
JOB NO. JSL0021
CONTRACT ID.
PROJECT NO.
BRIDGE NO. A9489

DESCRIPTION | DATE

MISSOURI HIGHWAYS AND TRANSPORTATION COMMISSION
105 WEST CAPITOL
JEFFERSON CITY, MO 65102
1-888-ASK-MODOT (1-888-275-6636)

HDR Engineering, Inc.
1001 Highlands Plaza Drive
Suite 200
St. Louis, MO 63110
314-425-8300
Certificate of Authority: 000856

BORING DATA

Note: For location of borings, see Sheet No. 1.

Detailed September 2025
Checked September 2025

Note: This drawing is not to scale. Follow dimensions.

Sheet No. 39 of 40

c:\pwworking\central01\d4975494\B_A9489_039_SL0021.dgn 1:42:18 PM 4/1/2026

Missouri Department of Transportation
Construction and Materials

BORING NO. A9489-301
Page 2 of 2

Job No.: MG24029	**County:** St. Louis	**Route:** Route 367
Design:	**Skew:**	**Location:** St. Louis County, Missouri
Bent:	**Logged By:** B. Nepal	**Operator:** G. Shetley
Station:	**Northing:** 1069602.896	**Date of Work:** 05/15/24-05/15/24
Offset:	**Easting:** 894804.596	**Depth to Water:** 18.0
Elevation: 552.0	**Requested Northing:**	**Depth Hole Open:**
Requested Station:	**Requested Easting:**	**Time Change:**
Requested Offset:	**Equipment:** CME 750Y ,Split-Spoon Sampler, Shelby Tube, NQ	
Requested Elevation:	**Location Note:**	
Drill No.: UES	**Hammer Efficiency:** 95%	**Drilling Method:** Hollow Stem Auger

Depth (ft)	Graphic	Description	Elevation (ft)	Sample Type	REC % (RQD %)	Blow Counts (N_{60})	Shear Data	Field Tests	Index Tests
35		27.0-42.0' Light grey and brown, lean CLAY (CL), trace sand *(continued)*	515						
40				X	100	3-5-5 (16)		PP = 3.50 tsf	MC = 27.4%
			510						
		42.0-49.0' Light brown and grey, fat CLAY (CH)							
45				X	100	2-2-4 (10)		PP = 2.25 tsf	MC = 27.7%
		47.0' - with fine sand below 47 ft.	505						
50		49.0-55.0' Weathered SHALE		X	100	30-50/0.3'		PP = 4.00 tsf	MC = 20.4%
			500						
55				X	100	50/0.4'			MC = 14.3%
		55.0-65.0' Brown and grey, with orange, SANDSTONE AND SILTSTONE, moderately weathered, soft, very finely crystalline to aphanitic, slightly to moderately fractured 57.0' - compressive strength = 2,079 psi	495		90 (80)				
60			490		93 (82)				
65		Refusal at 53.9 feet. Bottom of borehole at 65.0 feet.							

N_{60} = (Em/60)Nm N_{60} - Corrected N value for standard 60% SPT efficiency; Em - Measured hammer efficiency in percent; Nm - Observed N-value; (1) = Assumed, (2) = Actual

Coordinate System: _____ **Coordinate Zone:** _____ **Coordinate Proj. Factor:** _____

Coordinate Datum: _____ **Coordinate Units:** U.S. Survey Feet

* Persons using this information are cautioned that the materials shown are determined by the equipment noted and accuracy of the "log of materials" is limited thereby and by judgement of the operator. THIS INFORMATION IS FOR DESIGN PURPOSES ONLY.

LETTER BOREHOLE - MODOT_20151118.GDT - 1/13/25 08:57 - G:\PROJECT FILES\2024\MG24C29 I-270 GAP FROM ROUTE 367 TO LILAC AVENUE\FIELD DATA\ROUTE 367\I-270 ROUTE 367 MODOT GINT LOGS.GPJ

STATE OF MISSOURI
RYAN DAVID SHAW
NUMBER PE-2017000366
PROFESSIONAL ENGINEER
THIS SHEET HAS BEEN SIGNED, SEALED AND DATED ELECTRONICALLY

DATE PREPARED 4/1/2026
ROUTE I-270 | STATE MO
DISTRICT BR | SHEET NO. 40
COUNTY ST. LOUIS
JOB NO. JSL0021
CONTRACT ID.
PROJECT NO.
BRIDGE NO. A9489

DESCRIPTION
DATE

MISSOURI HIGHWAYS AND TRANSPORTATION COMMISSION
MoDOT
105 WEST CAPITOL
JEFFERSON CITY, MO 65102
1-888-ASK-MODOT (1-888-275-6636)

HDR Engineering, Inc.
1001 Highlands Plaza Drive
Suite 200
St. Louis, MO 63110
314-425-8300
Certificate of Authority: 000856

BORING DATA

Note: For location of borings, see Sheet No. 1.

Detailed September 2025
Checked September 2025

Note: This drawing is not to scale. Follow dimensions.

c:\pwworking\central01\d4975494\B_A9489_040_SL0021.dgn 1:42:48 PM 4/1/2026

SEC/SUR 33 TWP 47N RGE 7E

(75.5'-70.5') PRESTRESSED CONCRETE NU-GIRDER SPANS

Pile Encasement	Option Used (✓)
Pipe Pile Spacer	
Pile Jacket	

MoDOT Construction personnel will indicate the pile encasement used.

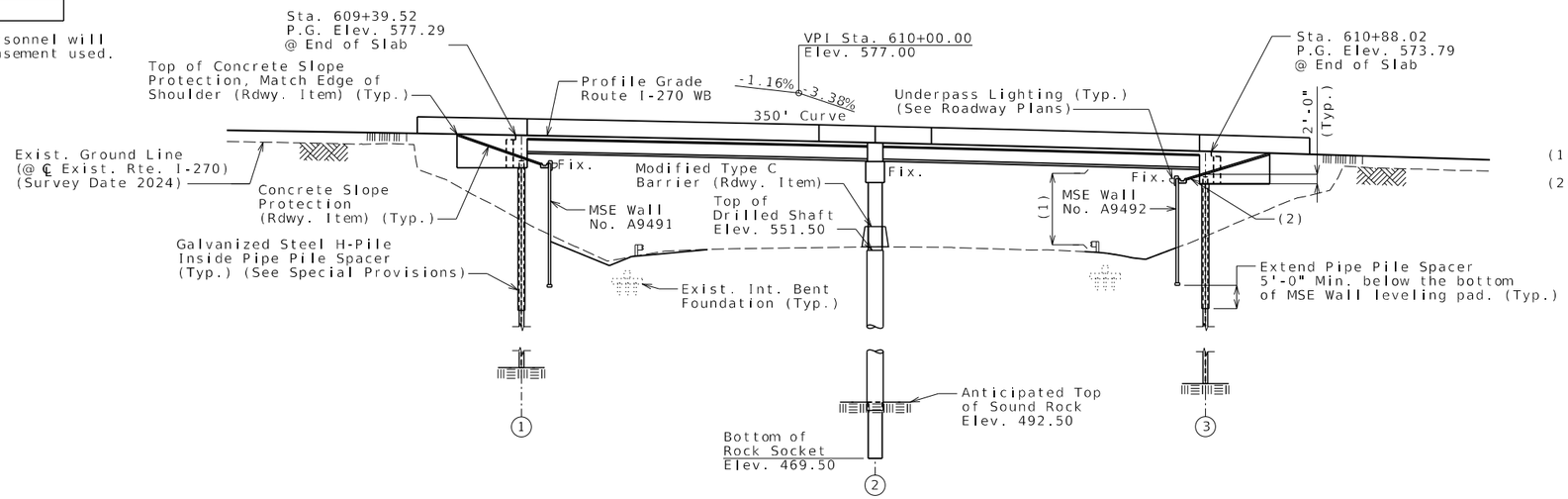

GENERAL ELEVATION

(1) Calculated Min. Vertical Clr. = 17'-9"

(2) 2:1 (H:V) Max. slope to bent between MSE Wall and front face of end bent. Transition to 3:1 (H:V) Max. slope normal to bent outside of bridge limits, see Roadway plans.

All bents are parallel.

All dimensions are horizontal.

For General Notes, Estimated Quantities, Estimated Quantities for Slab on Concrete NU-Girder and Location Sketch, see Sheet No. 2.

For Foundation Data, see Sheet No. 3.

For Substructure Layout, see Sheet No. 7.

Contractor shall coordinate construction of Bridge No. A9490 with MSE Walls No. A9491 & A9492.

Roadway fill, exclusive of Lightweight Cellular Concrete backfill and Select Granular Backfill for Structural Systems, shall be completed to the final roadway section and up to the elevation of the bottom of the concrete beam within the limits of the structure and for not less than 25 feet in back of the fill face of the end bents before any piles are driven for any bents falling within the embankment section.

◔ Indicates location of borings.

Notice and Disclaimer Regarding Boring Log Data

The locations of all subsurface borings for this structure are shown on the plan sheet for this structure. The boring data for all locations indicated, as well as any other boring logs or other factual records of subsurface data and investigations performed by the department for the design of the project, are shown on Sheets No. 39 thru 43 and may be included in the Electronic Bridge Deliverables. They will also be available from the Project Contact upon written request. No greater significance or weight should be given to the boring data depicted on the plan sheets than is given to the subsurface data available from the district or elsewhere.

The Commission does not represent or warrant that any such boring data accurately depicts the conditions to be encountered in constructing this project. A contractor assumes all risks it may encounter in basing its bid prices, time or schedule of performance on the boring data depicted here or those available from the district, or on any other documentation not expressly warranted, which the contractor may obtain from the Commission.

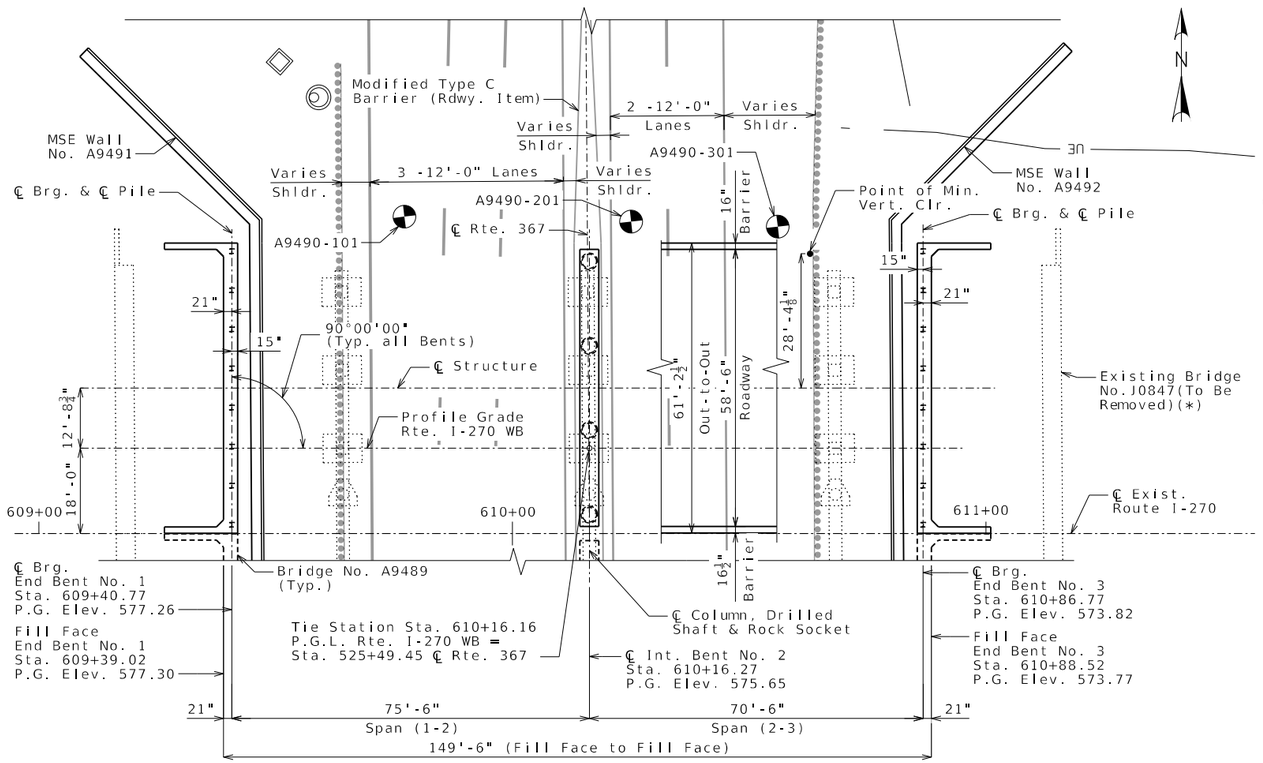

PLAN

(*) To facilitate the installation of the proposed intermediate bent foundation the contractor will be required to remove a portion of the existing footing concrete. Cost of any removal is considered incidental to Removal of Bridges (J0847).

BM #5 - CUT SQUARE ON CONC BASE OF DOUBLE POST SIGN; SOUTH OF I-270, ALSO BEING ON THE WEST SIDE OF ROUTE 367
ELEV= 558.50
NAVD-88

BM #6 - CUT SQUARE ON CONC PAD FOR AREA INLET; JUST NORTH OF I-270, ALSO BEING ON THE WEST SIDE OF ROUTE 367
ELEV= 550.30
NAVD-88

BRIDGE: ROUTE I-270 WB OVER ROUTE 367

ROUTE I-270 WB FROM ROUTE AC TO ROUTE H
ABOUT 1.5 MILES EAST OF ROUTE AC
BEGINNING STATION 609+39.02 (PROFILE GRADE WB I-270)

Designed September 2025
Detailed September 2025
Checked September 2025

Note: This drawing is not to scale. Follow dimensions.

STATE OF MISSOURI
RYAN DAVID SHAW
NUMBER PE-2017000368
PROFESSIONAL ENGINEER
THIS SHEET HAS BEEN SIGNED, SEALED AND DATED ELECTRONICALLY

DATE PREPARED 4/1/2026
ROUTE I-270 | STATE MO
DISTRICT BR | SHEET NO. 1
COUNTY ST. LOUIS
JOB NO. JSL0021
CONTRACT ID.
PROJECT NO.
BRIDGE NO. A9490

DESCRIPTION | DATE

MISSOURI HIGHWAYS AND TRANSPORTATION COMMISSION
105 WEST CAPITOL
JEFFERSON CITY, MO 65102
1-888-ASK-MODOT (1-888-275-6636)

HDR Engineering, Inc.
1001 Highlands Plaza Drive
Suite 200
St. Louis, MO 63110
314-425-8300
Certificate of Authority: 000856

Estimated Quantities

Item		Substr.	Superstr.	Total
Bridge Approach Slab (Major)	sq. yard		268	268
Drilled Shafts (3 ft. 6 in. Dia.)	linear foot	236		236
Rock Sockets (3 ft. 0 in. Dia.)	linear foot	92		92
Video Camera Inspection	each	4		4
Foundation Inspection Holes	linear foot	132		132
Sonic Logging Testing	each	4		4
Galvanized Structural Steel Piles (12 in.)	linear foot	1248		1248
Pile Point Reinforcement	each	16		16
Class B Concrete (Substructure)	cu. yard	117.3		117.3
Type D Barrier	linear foot		323	323
Modified Type D Barrier	linear foot		40	40
Slab on Concrete NU-Girder	sq. yard		1010	1010
NU 35, Prestressed Concrete NU-Girder	linear foot		1022	1022
Reinforcing Steel (Galvanized)	pound	40,190		40,190
Conduit System on Structure	lump sum		1	1
Protective Coating - Concrete Bents and Piers (Epoxy)	lump sum	1		1
Slab Drain	each		1	1
Drainage System (On Structure)	lump sum		1	1
Vertical Drain at End Bents	each	2		2
Laminated Neoprene Bearing Pad	each		14	14
Laminated Neoprene Bearing Pad (Tapered)	each		14	14
Pipe Pile Spacers	each	16		16

Cost of L4x4 ASTM A709 Grade 36 HP pile anchors and 3/4-inch diameter ASTM F3125 Grade A325 Type 1 bolts, complete in place, will be considered completely covered by the contract unit price for Galvanized Structural Steel Piles (12 in.).

All concrete above the construction joint in the end bents is included in the Estimated Quantities for Slab on Concrete NU-Girder.

All reinforcement in the end bents is included in the Estimated Quantities for Slab on Concrete NU-Girder.

All reinforcement in the intermediate bent concrete diaphragms except reinforcement embedded in the beam cap is included in the Estimated Quantities for Slab on Concrete NU-Girder.

All concrete above the intermediate beam cap is included in the Estimated Quantities for Slab on Concrete NU-Girder.

Estimated Quantities for Slab on Concrete NU-Girder

Item		Total
Class B-2 Concrete	cu. yard	338
Reinforcing Steel (Galvanized)	pound	98,560

The table of Estimated Quantities for Slab on Concrete NU-Girder represents the quantities used by the State in preparing the cost estimate for concrete slabs. The area of the concrete slab will be measured to the nearest square yard longitudinally from end of slab to end of slab and transversely from out to out of bridge slab (or with the horizontal dimensions as shown on the plan of slab). Payment for stay-in-place corrugated steel forms, conventional forms, all concrete and galvanized reinforcing steel will be considered completely covered by the contract unit price for the slab. Variations may be encountered in the estimated quantities but the variations cannot be used for an adjustment in the contract unit price.

Method of forming the slab shall be as shown on the plans and in accordance with Sec 703. All hardware for forming the slab to be left in place as a permanent part of the structure shall be coated in accordance with ASTM A123 or ASTM B633 with a thickness class SC 4 and a finish type I, II or III.

Slab shall be cast-in-place with conventional forms or stay-in-place corrugated steel forms. Precast prestressed panels will not be premitted.

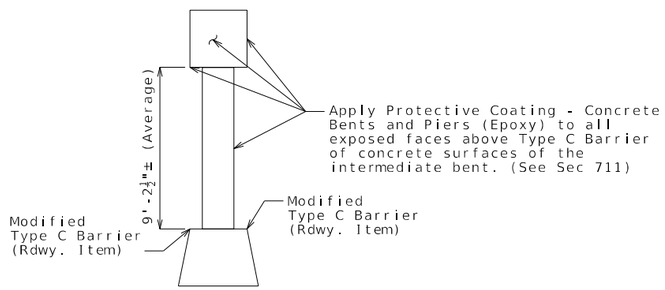

PROTECTIVE COATING DETAILS AT INTERMEDIATE BENT NO. 2

General Notes:

DESIGN SPECIFICATIONS:
2020 AASHTO LRFD Bridge Design Specifications (9th Ed.)
2023 AASHTO Guide Specifications for LRFD Seismic Bridge Design (3rd Ed.)
Seismic Design Category = B (Seismic Details plus Abutment Seismic Design)
Design earthquake response spectral acceleration coefficient at 1.0 second period, S_{D1} = 0.219g
Acceleration coefficient (effective peak ground acceleration coefficient), A_s = 0.229g

DESIGN LOADING:
Vehicular = HL-93
Future Wearing Surface = 35 lb/sf
Earth = 120 lb/cf
Equivalent Fluid Pressure = 45 lb/cf (Min.)
Superstructure: Simply-Supported, Non-Composite for dead load. Continuous Composite for live load.

DESIGN UNIT STRESSES:

Class B Concrete (Substructure)	f'c = 3,000 psi
Class B-2 Concrete (Drilled Shafts & Rock Sockets)	f'c = 4,000 psi
Class B-2 Concrete (Superstructure, except Prestressed Girders and Barrier)	f'c = 4,000 psi
Class B-1 Concrete (Barrier)	f'c = 4,000 psi
Reinforcing Steel (ASTM A706 Grade 60)	fy = 60,000 psi
Structural Steel HP Pile (ASTM A709 Grade 50)	fy = 50,000 psi

For prestressed girder stresses, see Sheets No. 18 thru 21.

NEOPRENE PADS:
Neoprene bearing pads shall be 60 durometer and shall be in accordance with Sec 716.

JOINT FILLER:
All joint filler shall be in accordance with Sec 1057 for preformed sponge rubber expansion and partition joint filler, except as noted.

REINFORCING STEEL:
Minimum clearance to reinforcing steel shall be 1 1/2", unless otherwise shown.

MBS refers to mechanical bar splices. Mechanical bar splices shall be in accordance with Sec 706 or 710 except that no measurement will be made for mechanical bar splices and they will be considered completely covered by the contract unit price for other items.

GALVANIZED REINFORCING STEEL:
Specification, materials, zinc coating process and construction practice shall be in accordance with ASTM A1094/A1094M-20.

Galvanized reinforcing steel shall not come in contact with uncoated reinforcing steel. Nylon, PVC or Polyethylene spacers shall be used where necessary. Nylon cable ties shall be used to bind the spacers to threinforcement.

RESIN ANCHORS:
The contractor shall use one of the qualified resin anchor systems in accordance with Sec 1039.

The minimum embedment depth in concrete with f'c = 4,000 psi for the resin anchor systems shall be that required to meet the minimum ultimate pullout strength in accordance with Sec 1039 but shall not be less than 5".

CONCRETE PROTECTIVE COATINGS:
Protective coating for concrete bents and piers (Epoxy) shall be applied as shown on the bridge plans and in accordance with Sec 711.

STAY-IN-PLACE CORRUGATED STEEL FORMS:
Corrugated steel forms, supports, closure elements and accessories shall be in accordance with grade requirement and coating designation G165 of ASTM A653. Complete shop drawings of the permanent steel deck forms shall be required in accordance with Sec 1080.

Corrugations of stay-in-place forms shall be filled with an expanded polystyrene material. The polystyrene material shall be placed in the forms with an adhesive in accordance with the manufacturer's recommendations.

Form sheets shall not rest directly on the top of girder flanges. Sheets shall be securely fastened to form supports with a minimum bearing length of one inch on each end. Form supports shall be placed in direct contact with the flange. Welding on or drilling holes in the girder flanges will not be permitted. All steel fabrication and construction shall in accordance with Sec 1080 and 712. Certified field welders will not be required for welding of the form supports.

The design of stay-in-place corrugated steel forms is per manufacturer which shall be in accordance with Sec 703 for false work and forms. Maximum actual weight of corrugated steel forms allowed shall be 4 psf assumed for girder loading.

TRAFFIC HANDLING:
1) Close all Rte. I-270 lanes on the existing EB structure (J0847).

2) Reduce WB & EB I-270 traffic to two lanes and shift EB traffic onto existing WB structure (J0847) utilizing a temporary crossover with barrier system.

3) Maintain two lanes of traffic in each direction on existing WB structure (J0847) while construction on Bridge No. A9489 completes (all bridge work, except for the median portion of the bridge approach slab and Modified Type D barrier).

4) Shift two lanes of EB traffic onto new EB Bridge No. A9489 and maintain two lanes of WB traffic on existing WB structure (J0847) while the remainder of the Bridge No. A9489 construction completes (median portion of bridge approach slab and Modified Type D barrier).

5) Close all I-270 lanes on the existing WB structure (J0847).

6) Shift WB & EB I-270 traffic onto new EB Bridge No. A9489. Maintain two lanes of traffic in each direction on new Bridge No. A9489 while construction of Bridge No. A9490 completes.

See roadway plans for traffic control and Sheets No. 4 thru 6 for staged construction details.

Vertical clearance for Route 367 traffic during construction shall be 15'-6" minimum over all through lanes of traffic.

The Contractor shall maintain a minimum of two 12'-0" through lanes in each direction during construction.

MISCELLANEOUS:
High strength bolts, nuts and washers will be sampled for quality assurance as specified in Sec 106.

Outline of existing work is indicated by light dashed lines. Heavy lines indicate new work.

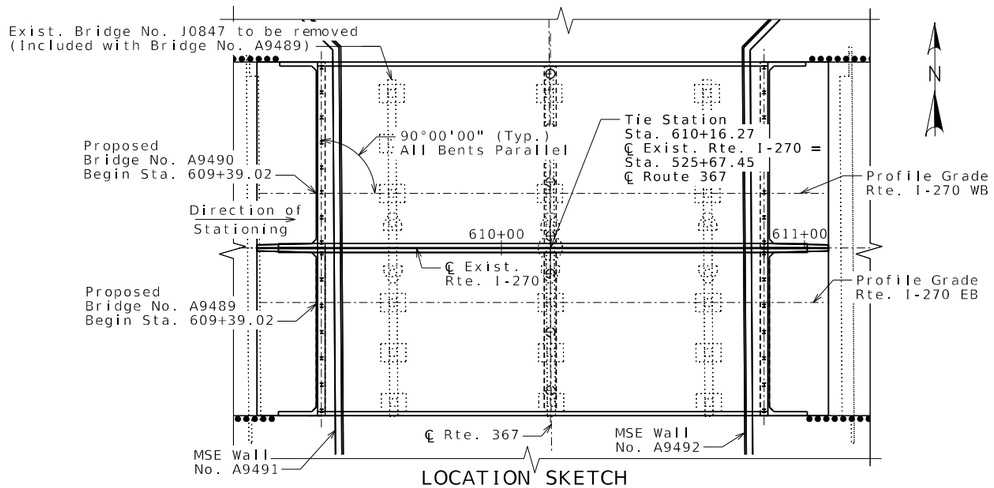

LOCATION SKETCH

STATE OF MISSOURI
RYAN DAVID SHAW
NUMBER PE-2017002268
PROFESSIONAL ENGINEER
THIS SHEET HAS BEEN SIGNED, SEALED AND DATED ELECTRONICALLY

DATE PREPARED 4/1/2026

ROUTE	STATE
I-270	MO
DISTRICT	SHEET NO.
BR	2

COUNTY ST. LOUIS

JOB NO. JSL0021

CONTRACT ID.

PROJECT NO.

BRIDGE NO. A9490

DESCRIPTION	DATE

MISSOURI HIGHWAYS AND TRANSPORTATION COMMISSION
105 WEST CAPITOL
JEFFERSON CITY, MO 65102
1-888-ASK-MODOT (1-888-275-6636)
HDR Engineering, Inc.
1001 Highlands Plaza Drive
Suite 200
St. Louis, MO 63110
314-425-8300
Certificate of Authority: 000856

Foundation Data

Type		Design Data		Bent Number 1	Bent Number 2	Bent Number 3
Load Bearing Pile		Pile Type and Size		HP 12x53		HP 12x53
		Number	ea	8		8
		Approximate Length Per Each	ft	79		77
		Pile Point Reinforcement	ea	All		All
		Min. Galvanized Penetration (Elev.)	ft	Full Length		Full Length
		Minimum Tip Penetration (Elev.)	ft	--		--
		Criteria for Min. Tip Penetration		(*)		(*)
		Pile Driving Verification Method		DF		DF
		Resistance Factor		0.4		0.4
		Minimum Nominal Axial Compressive Resistance	kip	574		574
Rock Socket		Number	ea		4	
	Layer 1	Foundation Material			Strong Rock	
		Elevation Range	ft		492.5-490.5	
		Minimum Nominal Axial Compressive Resistance (Side Resistance)	ksf		0.0	
	Layer 2	Foundation Material			Strong Rock	
		Elevation Range	ft		490.5-482.4	
		Minimum Nominal Axial Compressive Resistance (Side Resistance)	ksf		11.6	
	Layer 3	Foundation Material			Strong Rock	
		Elevation Range	ft		482.4-472.4	
		Minimum Nominal Axial Compressive Resistance (Side Resistance)	ksf		17.5	
	Layer 4	Foundation Material			Strong Rock	
		Elevation Range	ft		472.4-469.5	
		Minimum Nominal Axial Compressive Resistance (Side Resistance)	ksf		5.0	

DF = FHWA-modified Gates Dynamic Formula

(*) HP piles are anticipated to be driven to refusal on rock. Review all borings for depth of rock and restrict driving as appropriate to comply with hard rock driving criteria in accordance with Sec 702. When pile refusal on rock occurs, as approved by the engineer, the minimum nominal axial compressive resistance is verified and no additional pile driving verification method is required.

Load Bearing Pile:
Minimum Nominal Axial Compressive Resistance = $\frac{\text{Maximum Factored Loads}}{\text{Resistance Factor}}$

Rock Socket (Drilled Shafts):
Minimum Nominal Axial Compressive Resistance (Side Resistance) = $\frac{\text{Maximum Factored Loads}}{\text{Resistance Factors}}$

Pile point reinforcement need not be galvanized. Shop drawings will not be required for pile point reinforcement.

The contractor shall make every effort to achieve the minimum galvanized penetration (elevation) shown on the plans for all piles. Deviations in penetration less than 5 feet of the minimum will be considered acceptable provided the contractor makes the necessary corrections to ensure the minimum penetration is achieved on subsequent piles.

FOUNDATION DATA

Detailed September 2025
Checked September 2025

Note: This drawing is not to scale. Follow dimensions.

STATE OF MISSOURI
RYAN DAVID SHAW
NUMBER PE-2017002368
PROFESSIONAL ENGINEER
THIS SHEET HAS BEEN SIGNED, SEALED AND DATED ELECTRONICALLY

DATE PREPARED 4/1/2026
ROUTE I-270 | STATE MO
DISTRICT BR | SHEET NO. 3
COUNTY ST. LOUIS
JOB NO. JSL0021
CONTRACT ID.
PROJECT NO.
BRIDGE NO. A9490

DESCRIPTION | DATE

MISSOURI HIGHWAYS AND TRANSPORTATION COMMISSION
105 WEST CAPITOL
JEFFERSON CITY, MO 65102
1-888-ASK-MODOT (1-888-275-6636)

HDR Engineering, Inc.
1001 Highlands Plaza Drive
Suite 200
St. Louis, MO 63110
314-425-8300
Certificate of Authority: 000856

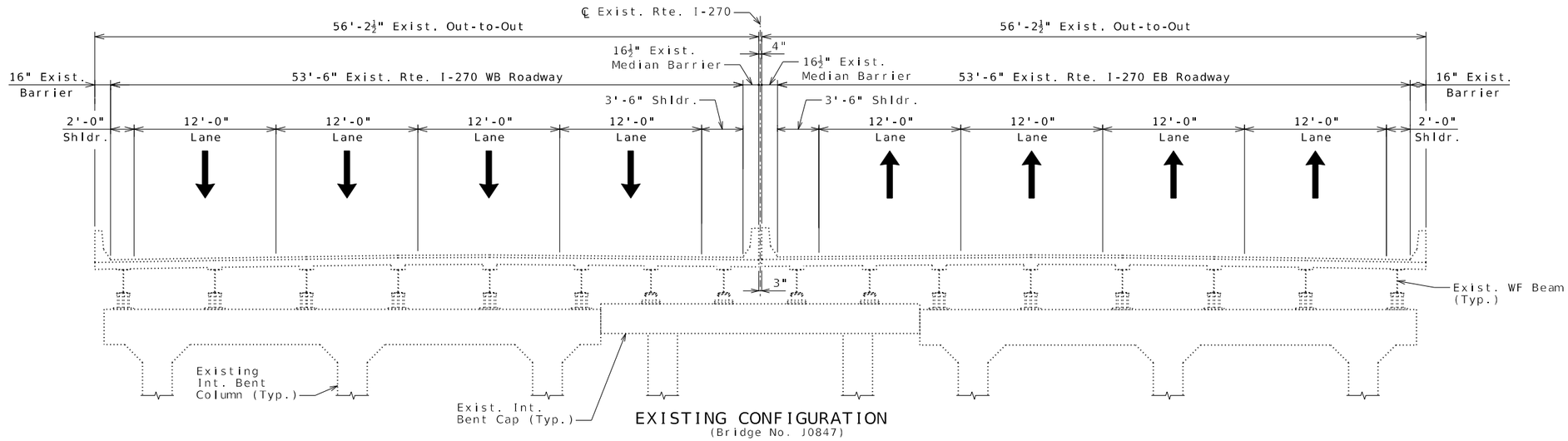

EXISTING CONFIGURATION
(Bridge No. J0847)

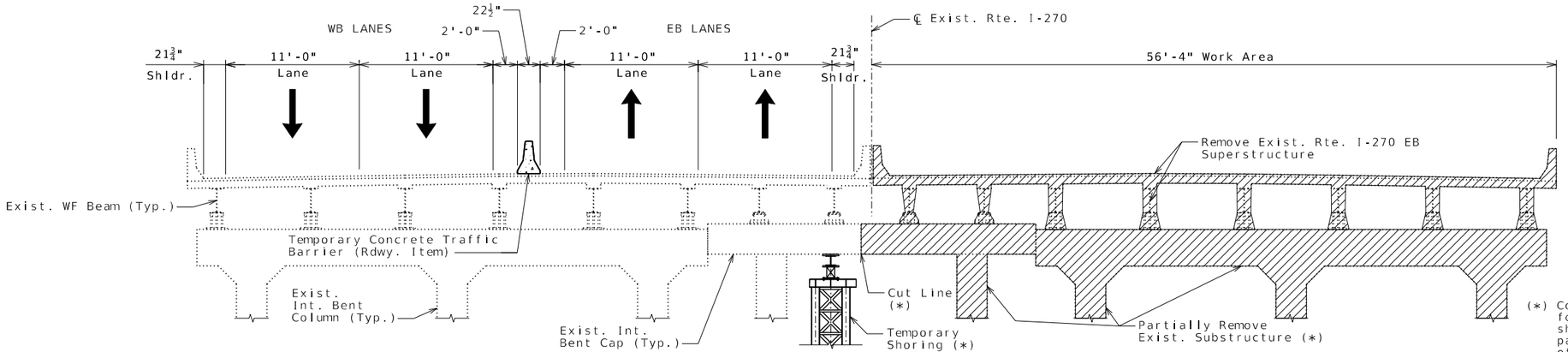

PHASE 1A REMOVAL

(*) Contractor is responsible for the stability of the shared substructure during partial removal. Location of the cut line and design of temporary shoring tower to be determined by the contractor.

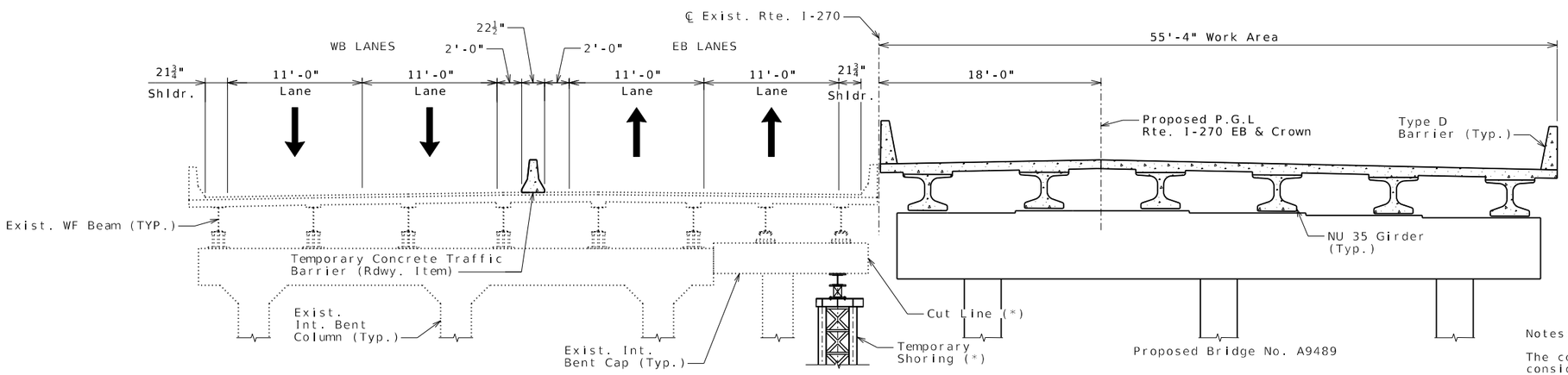

PHASE 1A CONSTRUCTION

Notes:

The cost of Removal of Bridges shall be considered completely covered by the contract lump sum price for Removal of Bridges (J0847) for Bridge No. A9489.

▨ Denotes Removal

STAGING PLANS

Detailed September 2025
Checked September 2025

Note: This drawing is not to scale. Follow dimensions.

STATE OF MISSOURI
RYAN DAVID SHAW
NUMBER PE-2017002388
PROFESSIONAL ENGINEER
THIS SHEET HAS BEEN SIGNED, SEALED AND DATED ELECTRONICALLY

DATE PREPARED 4/1/2026

ROUTE	STATE
I-270	MO

DISTRICT	SHEET NO.
BR	4

COUNTY: ST. LOUIS
JOB NO.: JSL0021
CONTRACT ID.:
PROJECT NO.:
BRIDGE NO.: A9490

DESCRIPTION
DATE

MISSOURI HIGHWAYS AND TRANSPORTATION COMMISSION
105 WEST CAPITOL
JEFFERSON CITY, MO 65102
1-888-ASK-MODOT (1-888-275-6636)

HDR Engineering, Inc.
1001 Highlands Plaza Drive
Suite 200
St. Louis, MO 63110
314-425-8300
Certificate of Authority: 000856

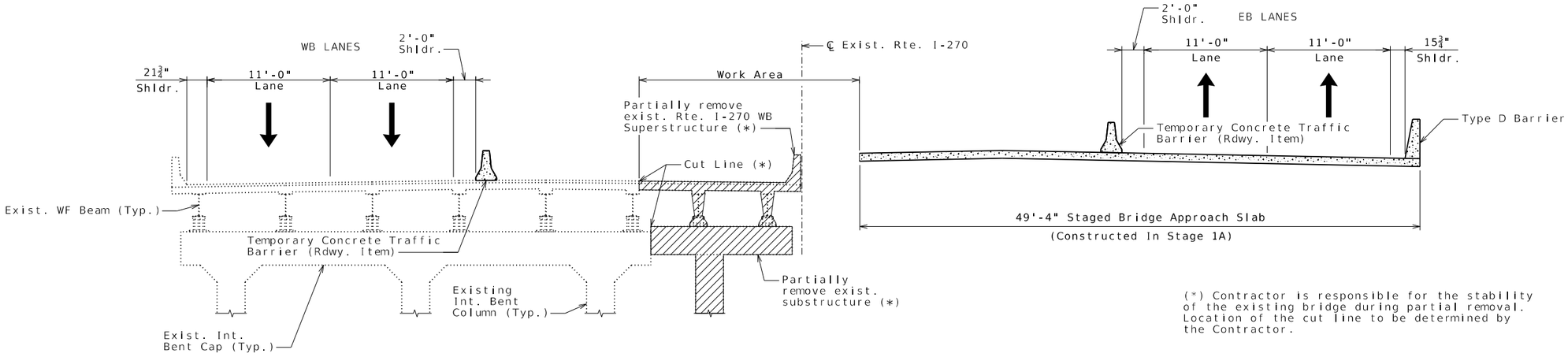

(*) Contractor is responsible for the stability of the existing bridge during partial removal. Location of the cut line to be determined by the Contractor.

PHASE 1B REMOVAL

(Shown near proposed End Bent No. 1, End Bent No. 3 similar)

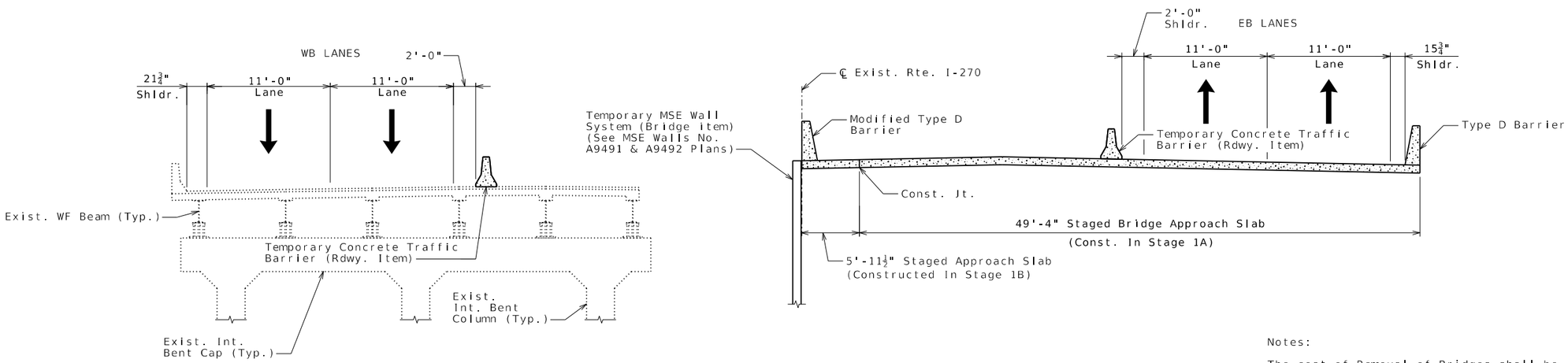

PHASE 1B CONSTRUCTION

(Shown near proposed End Bent No. 1, End Bent No. 3 similar)

Notes:

The cost of Removal of Bridges shall be considered completely covered by the contract lump sum price for Removal of Bridges (J0847) for Bridge No. A9489.

For Approach Slab Details, see Sheet No. 32.

▨ Denotes Removal

STAGING PLANS

Detailed September 2025
Checked September 2025

Note: This drawing is not to scale. Follow dimensions.

RYAN DAVID SHAW
NUMBER PE-2017003368
STATE OF MISSOURI
PROFESSIONAL ENGINEER
THIS SHEET HAS BEEN SIGNED, SEALED AND DATED ELECTRONICALLY

DATE PREPARED 4/1/2026
ROUTE I-270 | STATE MO
DISTRICT BR | SHEET NO. 5
COUNTY ST. LOUIS
JOB NO. JSL0021
CONTRACT ID.
PROJECT NO.
BRIDGE NO. A9490

DESCRIPTION | DATE

MISSOURI HIGHWAYS AND TRANSPORTATION COMMISSION
105 WEST CAPITOL
JEFFERSON CITY, MO 65102
1-888-ASK-MODOT (1-888-275-6636)

HDR Engineering, Inc.
1001 Highlands Plaza Drive
Suite 200
St. Louis, MO 63110
314-425-8300
Certificate of Authority: 000856

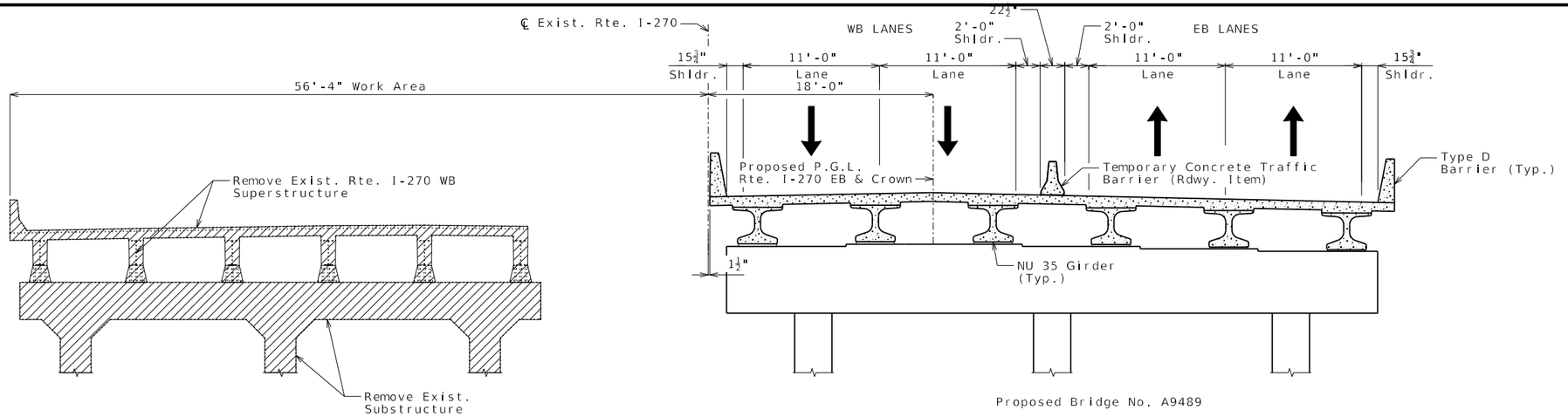

PHASE 2 REMOVAL

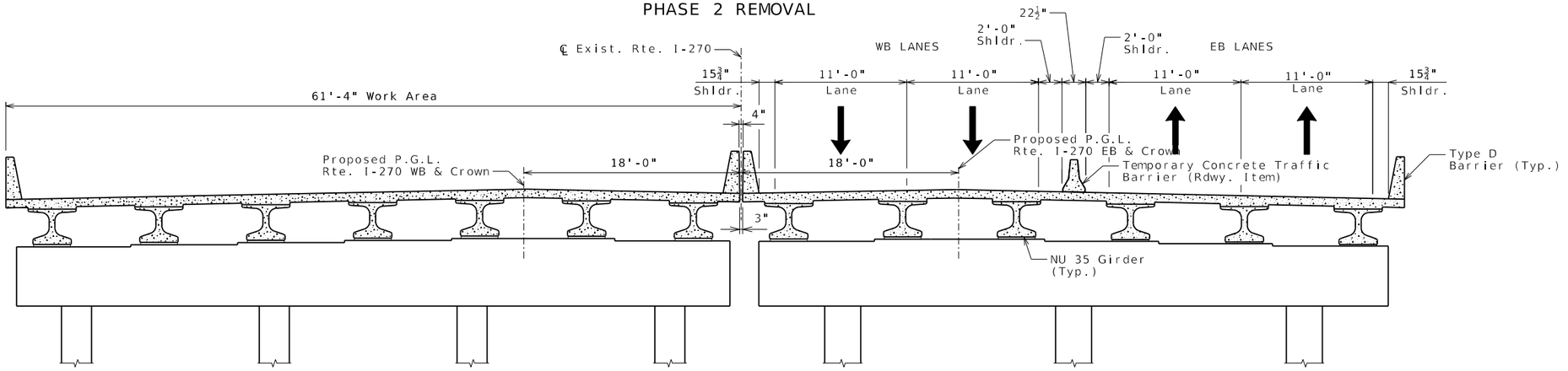

PHASE 2 CONSTRUCTION

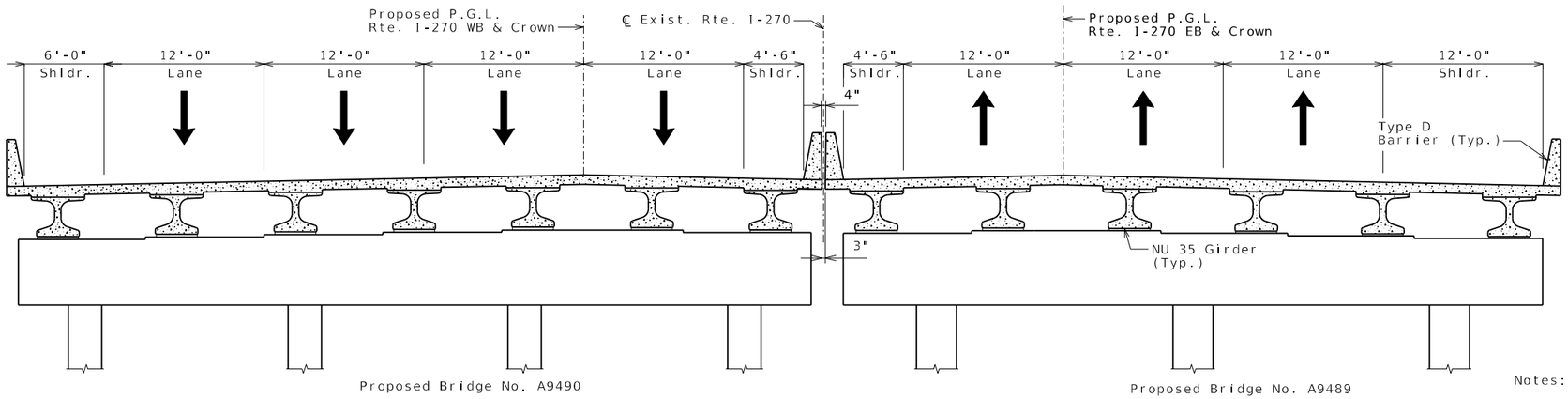

FINAL CONFIGURATION

Notes:

The cost of Removal of Bridges shall be considered completely covered by the contract lump sum price for Removal of Bridges (J0847) for Bridge No. A9489.

Denotes Removal

STAGING PLANS

Detailed September 2025
Checked September 2025

Note: This drawing is not to scale. Follow dimensions.

RYAN DAVID SHAW
NUMBER PE-2017003288
STATE OF MISSOURI
PROFESSIONAL ENGINEER
THIS SHEET HAS BEEN SIGNED, SEALED AND DATED ELECTRONICALLY

DATE PREPARED 4/1/2026
ROUTE I-270 | STATE MO
DISTRICT BR | SHEET NO. 6
COUNTY ST. LOUIS
JOB NO. JSL0021
CONTRACT ID.
PROJECT NO.
BRIDGE NO. A9490

DESCRIPTION | DATE

MISSOURI HIGHWAYS AND TRANSPORTATION COMMISSION
105 WEST CAPITOL
JEFFERSON CITY, MO 65102
1-888-ASK-MODOT (1-888-275-6636)

HDR Engineering, Inc.
1001 Highlands Plaza Drive
Suite 200
St. Louis, MO 63110
314-425-8300
Certificate of Authority: 000856

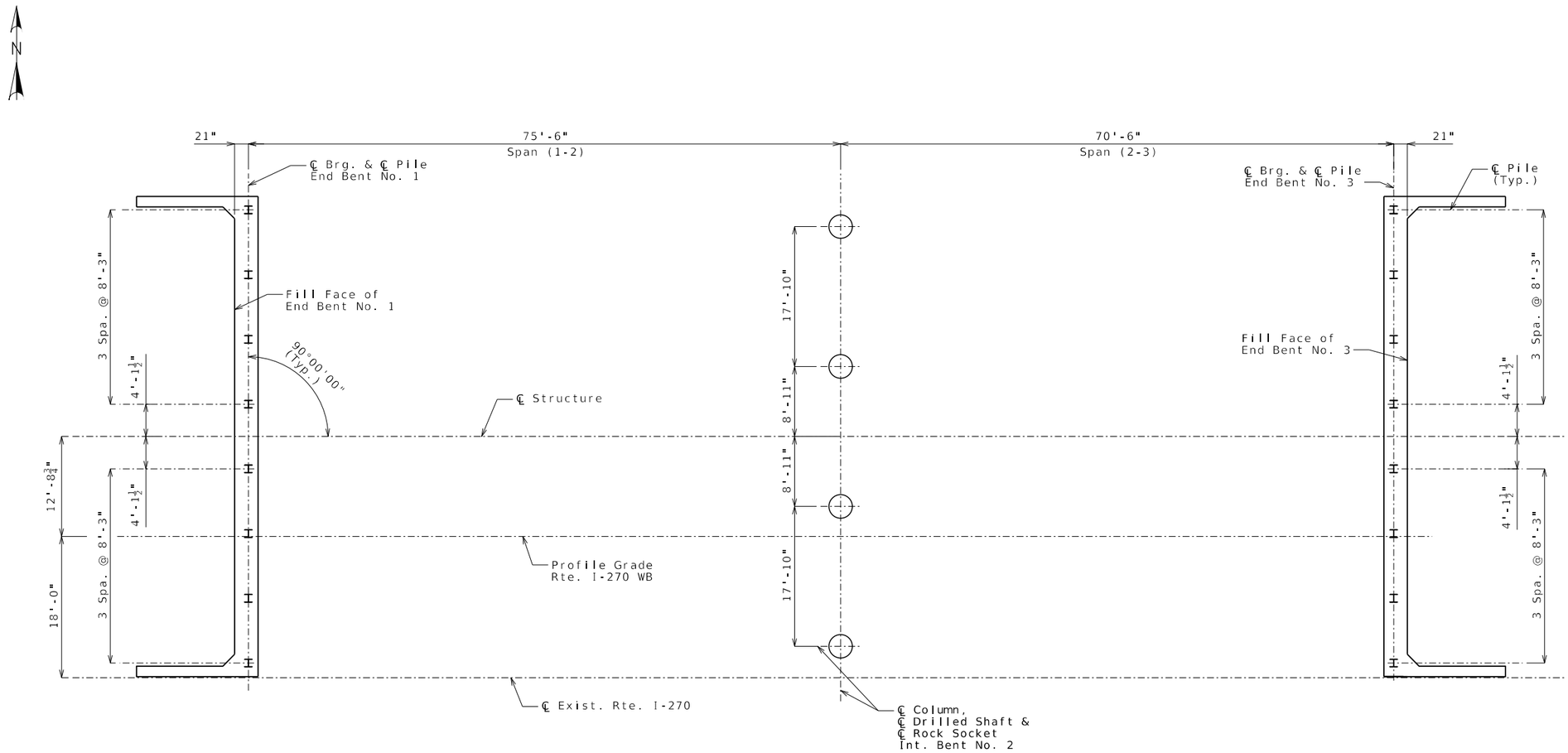

PART PLAN SHOWING FOUNDATION SPACING

Notes:

For Foundation Data, see Sheet No. 3.

For Staging Plans, see Sheets No. 4 thru 6.

For End Bent No. 1 Details, see Sheets No. 8 thru 10.

For Intermediate Bent No. 2 Details, see Sheets No. 12 & 13.

For End Bent No. 3 Details, see Sheets No. 14 thru 16.

SUBSTRUCTURE LAYOUT

Detailed September 2025
Checked September 2025

Note: This drawing is not to scale. Follow dimensions.

RYAN DAVID SHAW
NUMBER PE-2017003268
PROFESSIONAL ENGINEER
STATE OF MISSOURI
THIS SHEET HAS BEEN SIGNED, SEALED AND DATED ELECTRONICALLY

DATE PREPARED
4/1/2026

ROUTE	STATE
I-270	MO
DISTRICT	SHEET NO.
BR	7

COUNTY
ST. LOUIS

JOB NO.
JSL0021

CONTRACT ID.

PROJECT NO.

BRIDGE NO.
A9490

DESCRIPTION	DATE

MISSOURI HIGHWAYS AND TRANSPORTATION COMMISSION
105 WEST CAPITOL
JEFFERSON CITY, MO 65102
1-888-ASK-MODOT (1-888-275-6636)

HDR Engineering, Inc.
1001 Highlands Plaza Drive
Suite 200
St. Louis, MO 63110
314-425-8300
Certificate of Authority: 000856

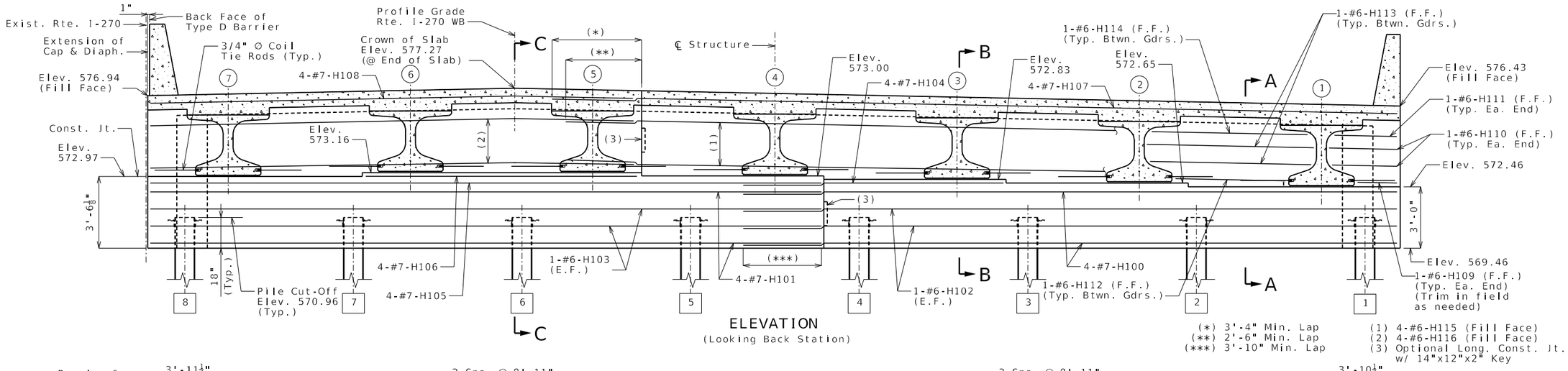

ELEVATION
(Looking Back Station)

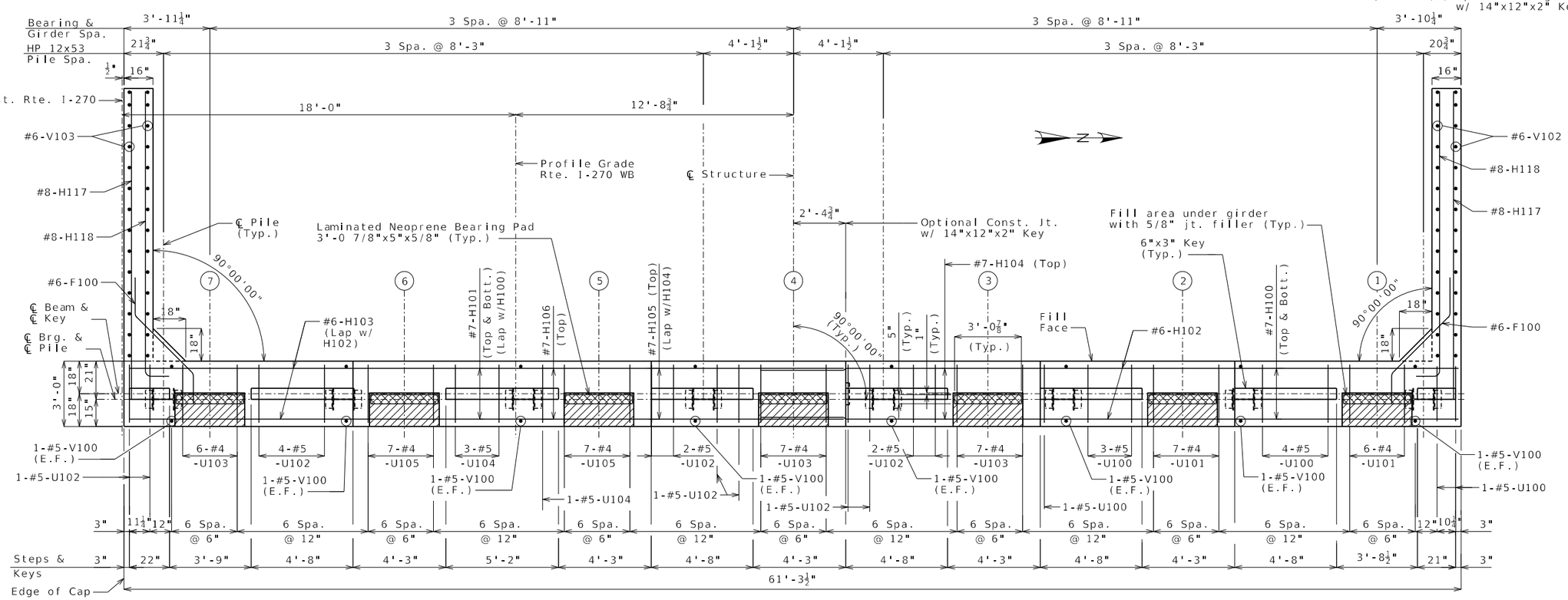

PLAN OF BEAM
(Horizontal dimensions are measured along ℄ Piles and ℄ Brg.)

Substructure Quantity Table for End Bent No. 1		
Item		Quantity
Galvanized Structural Steel Piles (12 in.)	linear foot	632
Pile Point Reinforcement	each	8
Class B Concrete (Substructure)	cu. yard	27.6
Pipe Pile Spacers	each	8

These quantities are included in the Estimated Quantities table on Sheet No. 2.

Detailed September 2025
Checked September 2025

Notes:

Work this sheet with Sheets No. 9 & 10.

For Sections A-A thru C-C, see Sheet No. 9.

For Key Details, Pile Anchor Details and Steel Pile Splice Detail, see Sheet No. 10.

For location of coil tie rods, see Sheets No. 18 & 19.

Notes (Cont.):

Reinforcing steel shall be shifted to clear piles. U-bars shall clear piles by at least 1 1/2-inches.

Strands at ends of girders shall be field bent or, if necessary, cut in field to maintain 1 1/2-inch minimum clearance to fill face of end bent.

All concrete in the end bent above top of beam and below top of slab shall be Class B-2.

#6-F100 bars shall be bent in field to clear girders.

Notes (Cont.):

For details and reinforcement of barriers at end bent, see Sheet No. 31.

E.F. Denotes Each Face.

F.F. Denotes Front Face.

(1) - Denotes girder number.

[1] - Denotes pile number.

END BENT NO. 1 DETAILS

Note: This drawing is not to scale. Follow dimensions.

RYAN DAVID SHAW NUMBER PE-2017003368 PROFESSIONAL ENGINEER
THIS SHEET HAS BEEN SIGNED, SEALED AND DATED ELECTRONICALLY

DATE PREPARED 4/1/2026
ROUTE I-270 | STATE MO
DISTRICT BR | SHEET NO. 8
COUNTY ST. LOUIS
JOB NO. JSL0021
CONTRACT ID.
PROJECT NO.
BRIDGE NO. A9490

DESCRIPTION | DATE

MISSOURI HIGHWAYS AND TRANSPORTATION COMMISSION
105 WEST CAPITOL
JEFFERSON CITY, MO 65102
1-888-ASK-MODOT (1-888-275-6636)
HDR Engineering, Inc.
1001 Highlands Plaza Drive
Suite 200
St. Louis, MO 63110
314-425-8300
Certificate of Authority: 000856

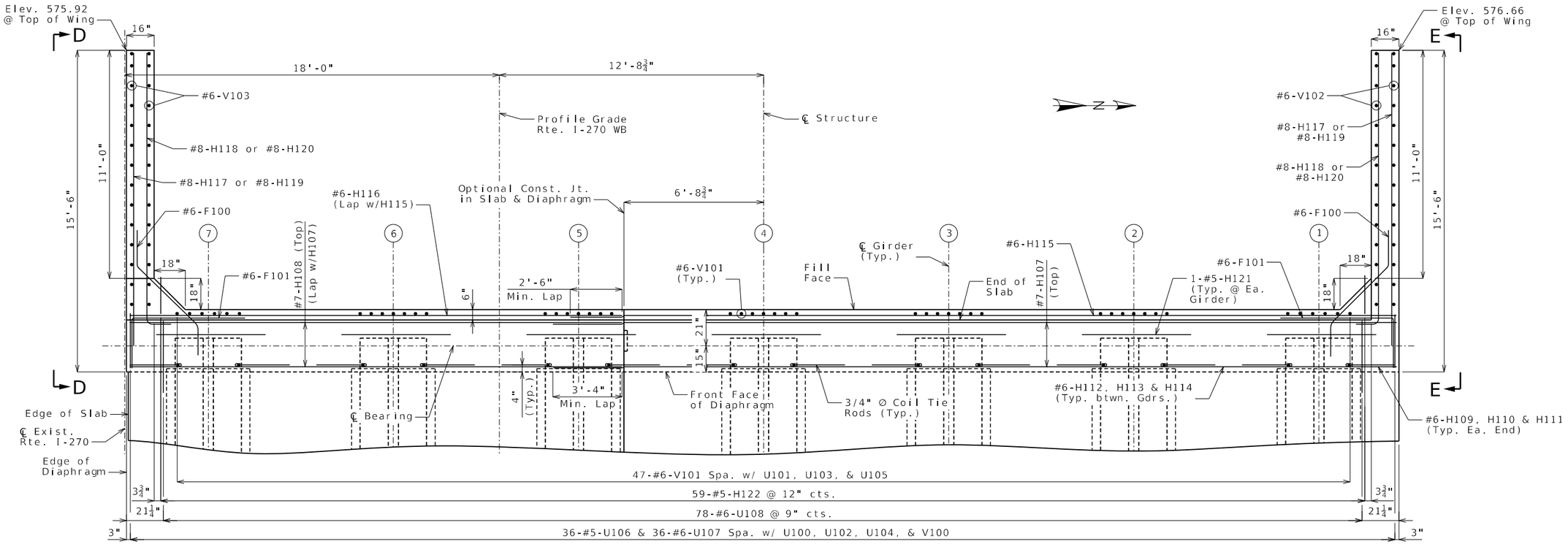

PART PLAN

(Horizontal dimensions are measured along ℄ Brg.)

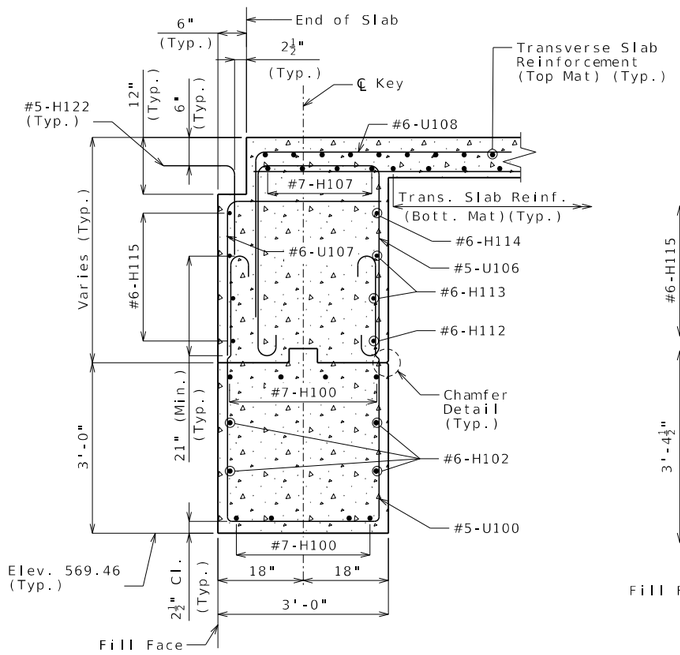

SECTION A-A

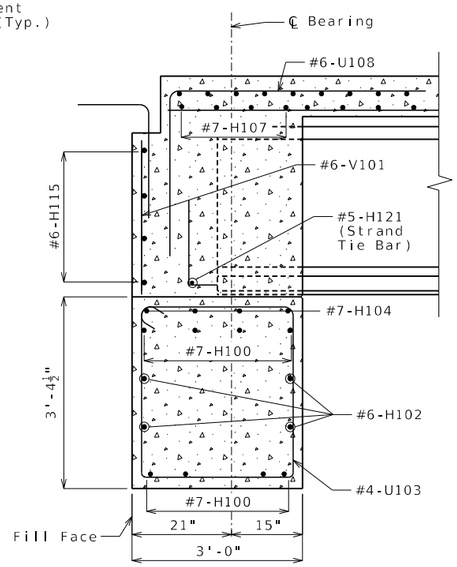

SECTION B-B

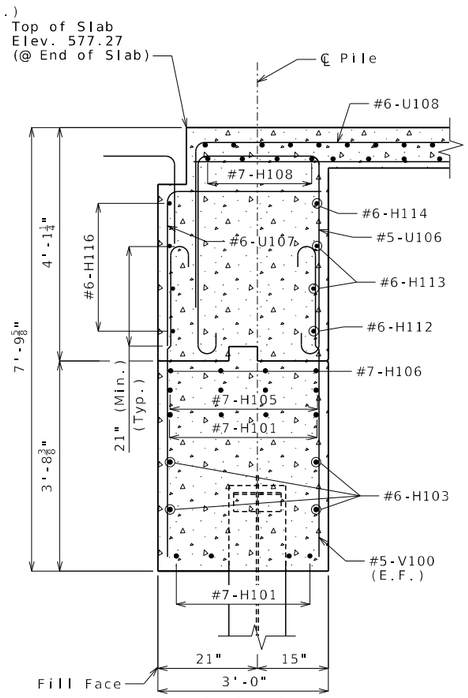

SECTION C-C

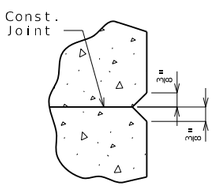

CHAMFER DETAIL

Notes:

Work this sheet with Sheets No. 8 & 10.

#6-F100 bars shall be bent in the field to clear girders.

For location of Sections A-A thru C-C, see Sheet No. 8.

For Elevations D-D and E-E, see Sheet No. 10.

For Key details, Pile Anchor details and Pile Splice details, see Sheet No. 10.

For location of coil tie rods and #5-H121 (strand tie bar), see Sheets No. 18 & 19.

For details and reinforcement of barriers at end bent, see Sheet No. 31.

E.F. Denotes Each Face.

(1) - Denotes girder number.

END BENT NO. 1 DETAILS

Detailed September 2025
Checked September 2025

Note: This drawing is not to scale. Follow dimensions.

RYAN DAVID SHAW
NUMBER PE-2017000388
PROFESSIONAL ENGINEER
STATE OF MISSOURI
THIS SHEET HAS BEEN SIGNED, SEALED AND DATED ELECTRONICALLY

DATE PREPARED
4/1/2026

ROUTE	STATE
I-270	MO
DISTRICT	SHEET NO.
BR	9

COUNTY
ST. LOUIS

JOB NO.
JSL0021

CONTRACT ID.

PROJECT NO.

BRIDGE NO.
A9490

DESCRIPTION

DATE

MISSOURI HIGHWAYS AND TRANSPORTATION COMMISSION
105 WEST CAPITOL
JEFFERSON CITY, MO 65102
1-888-ASK-MODOT (1-888-275-6636)
HDR Engineering, Inc.
1001 Highlands Plaza Drive
Suite 200
St. Louis, MO 63110
314-425-8300
Certificate of Authority: 000856

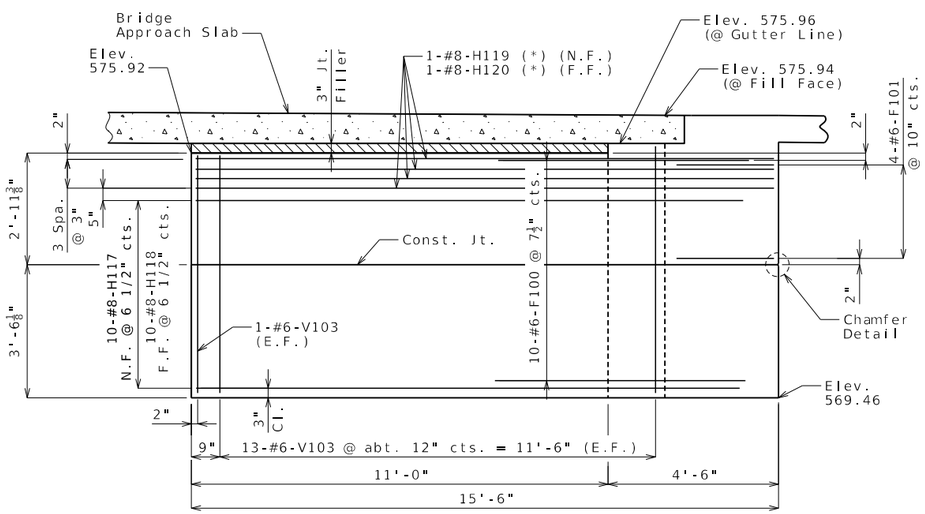

ELEVATION D-D

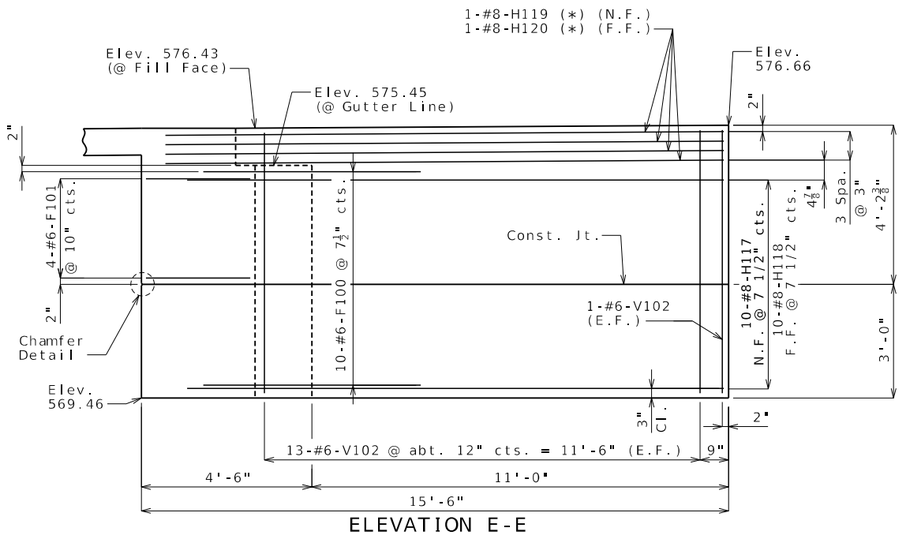

ELEVATION E-E

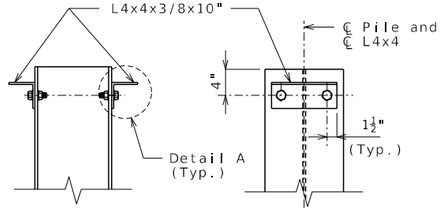

DETAILS OF HP PILE ANCHORS

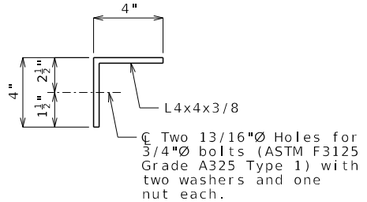

DETAIL A

Angles shall be coated with a minimum of two coats of non-aluminum epoxy mastic primer to provide a dry film thickness of 4 mils minimum, 8 mils maximum, or galvanized in accordance with Sec 1081. Bolts, washers and nuts shall be galvanized in accordance with AASHTO M 232 (ASTM A153), Class C.

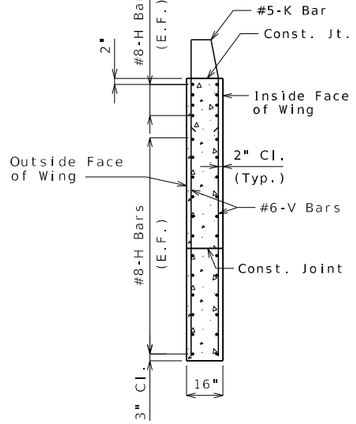

TYPICAL SECTION THRU LEFT WING

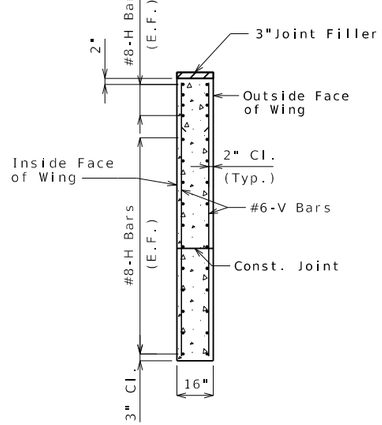

TYPICAL SECTION THRU RIGHT WING

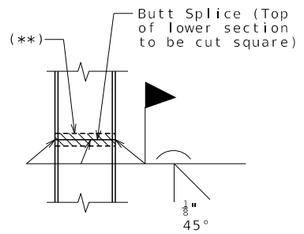

STEEL PILE SPLICE

(If required)

(**) Galvanizing material shall be omitted or removed one inch clear of weld locations in accordance with Sec 702.

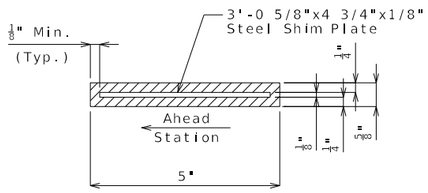

SECTION THRU LAMINATED NEOPRENE BEARING PAD

Note:

All dimensions and elevations given at outside face of wing unless otherwise noted.

The #6-F100 bars shall be bent in the field to clear girders.

(*) Place with grade

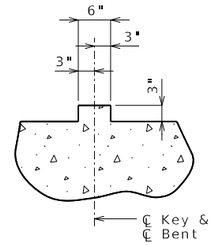

TYPICAL SECTION THRU KEY

Notes:

Work this sheet with Sheets No. 8 & 9.

For Chamfer Detail, see Sheet No. 9.

Seal joint between vertical faces of end bent beams and diaphragms of Bridge No. A9489 with the vertical faces of Bridge No. A9490. Preformed compression joint seal shall be in accordance with Sec 717. Payment will be considered covered by the contract unit price for other items included in the contract.

For Modified Type D Barrier (Right) at Approach Slabs, see Sheet No. 32.

For location of Elevations D-D and E-E see Sheet No. 9.

For details and reinforcement of barriers at end bent, see Sheet No. 31

E.F. Denotes Each Face.

F.F. Denotes Far Face.

N.F. Denotes Near Face.

END BENT NO. 1 DETAILS

Detailed September 2025
Checked September 2025

Note: This drawing is not to scale. Follow dimensions.

RYAN DAVID SHAW
NUMBER PE-2017002368
PROFESSIONAL ENGINEER
STATE OF MISSOURI
THIS SHEET HAS BEEN SIGNED, SEALED AND DATED ELECTRONICALLY

DATE PREPARED 4/1/2026
ROUTE I-270 | STATE MO
DISTRICT BR | SHEET NO. 10
COUNTY ST. LOUIS
JOB NO. JSL0021
CONTRACT ID.
PROJECT NO.
BRIDGE NO. A9490

DESCRIPTION | DATE

MISSOURI HIGHWAYS AND TRANSPORTATION COMMISSION
105 WEST CAPITOL
JEFFERSON CITY, MO 65102
1-888-ASK-MODOT (1-888-275-6636)

HDR Engineering, Inc.
1001 Highlands Plaza Drive
Suite 200
St. Louis, MO 63110
314-425-8300
Certificate of Authority: 000856

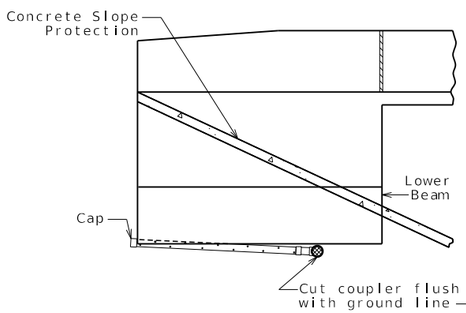

ELEVATION OF EXTERIOR WING

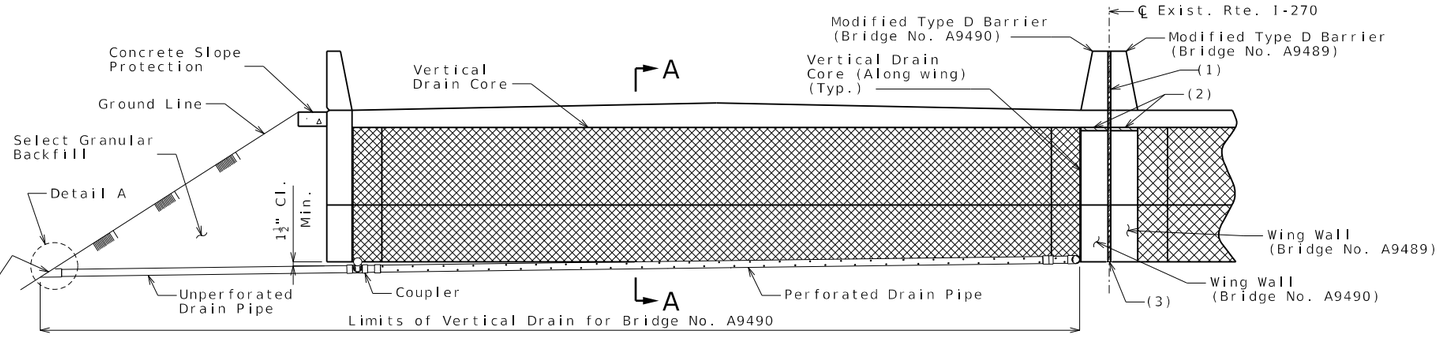

ELEVATION OF END BENT
(Looking Ahead Station)

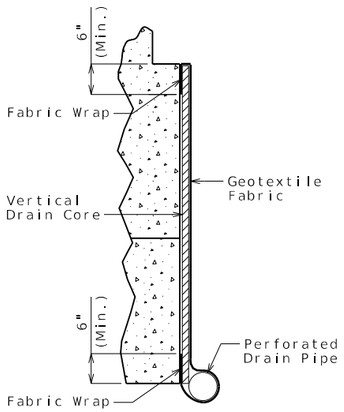

PART SECTION A-A
(Section thru wing similar)

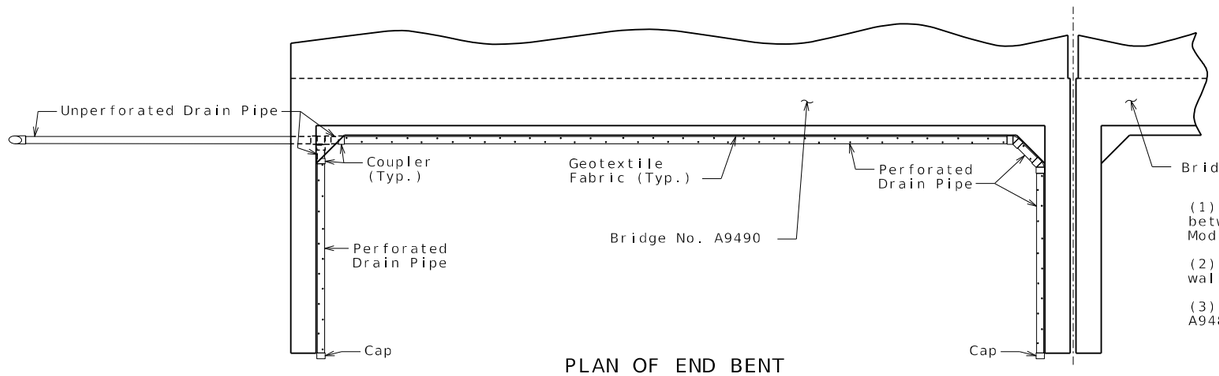

PLAN OF END BENT

(1) Place joint filler (varying thickness) between Bridges No. A9489 and A9490 Modified Type D Barriers.

(2) 3" joint filler between top of wing wall and bottom of bridge approach slab.

(3) 1" joint filler between Bridges No. A9489 and A9490 wing walls.

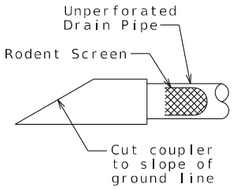

DETAIL A

General Notes:

Coordinate construction of vertical drain at end bents with MSE Wall Nos. A9491 & A9492.

All drain pipe shall be sloped 1 to 2 percent.

Drain pipe may be either 6-inch diameter corrugated metallic-coated steel pipe underdrain, 4-inch diameter corrugated polyvinyl chloride (PVC) drain pipe, or 4-inch diameter corrugated polyethylene (PE) drain pipe.

Drain pipe shall be placed at fill face of end bent and inside face of wings. The pipe shall slope to lowest grade of ground line, also missing the lower beam of end bent by a minimum of 1 1/2 inches.

Perforated pipe shall be placed at fill face side and inside face of wings at the bottom of end bent and plain pipe shall be used where the vertical drain ends to the exit at ground line.

Seal joint between vertical faces of end bent beams and diaphragms of Bridge No. A9490 with the vertical faces of Bridge No. A9489. Preformed compression joint seal shall be in accordance with Sec 717. Payment will be considered covered by the contract unit price for other items included in the contract.

For End Bent No. 1 Details, see Sheets No. 8 thru 10.

For End Bent No. 3 Details, see Sheets No. 14 thru 16.

For Modified Type D Barrier (Right) at Approach Slabs, see Sheet No. 32.

VERTICAL DRAIN AT END BENTS

(Squared end bent shown, skewed end bent similar)

Detailed September 2025
Checked September 2025

Note: This drawing is not to scale. Follow dimensions.

STATE OF MISSOURI
RYAN DAVID SHAW
NUMBER PE-2017000368
PROFESSIONAL ENGINEER
THIS SHEET HAS BEEN SIGNED, SEALED AND DATED ELECTRONICALLY

DATE PREPARED	4/1/2026
ROUTE	I-270
STATE	MO
DISTRICT	BR
SHEET NO.	11
COUNTY	ST. LOUIS
JOB NO.	JSL0021
CONTRACT ID.	
PROJECT NO.	
BRIDGE NO.	A9490

DESCRIPTION

DATE

MISSOURI HIGHWAYS AND TRANSPORTATION COMMISSION

MoDOT

105 WEST CAPITOL
JEFFERSON CITY, MO 65102
1-888-ASK-MODOT (1-888-275-6636)

HDR Engineering, Inc.
1001 Highlands Plaza Drive
Suite 200
St. Louis, MO 63110
314-425-8300
Certificate of Authority: 000856

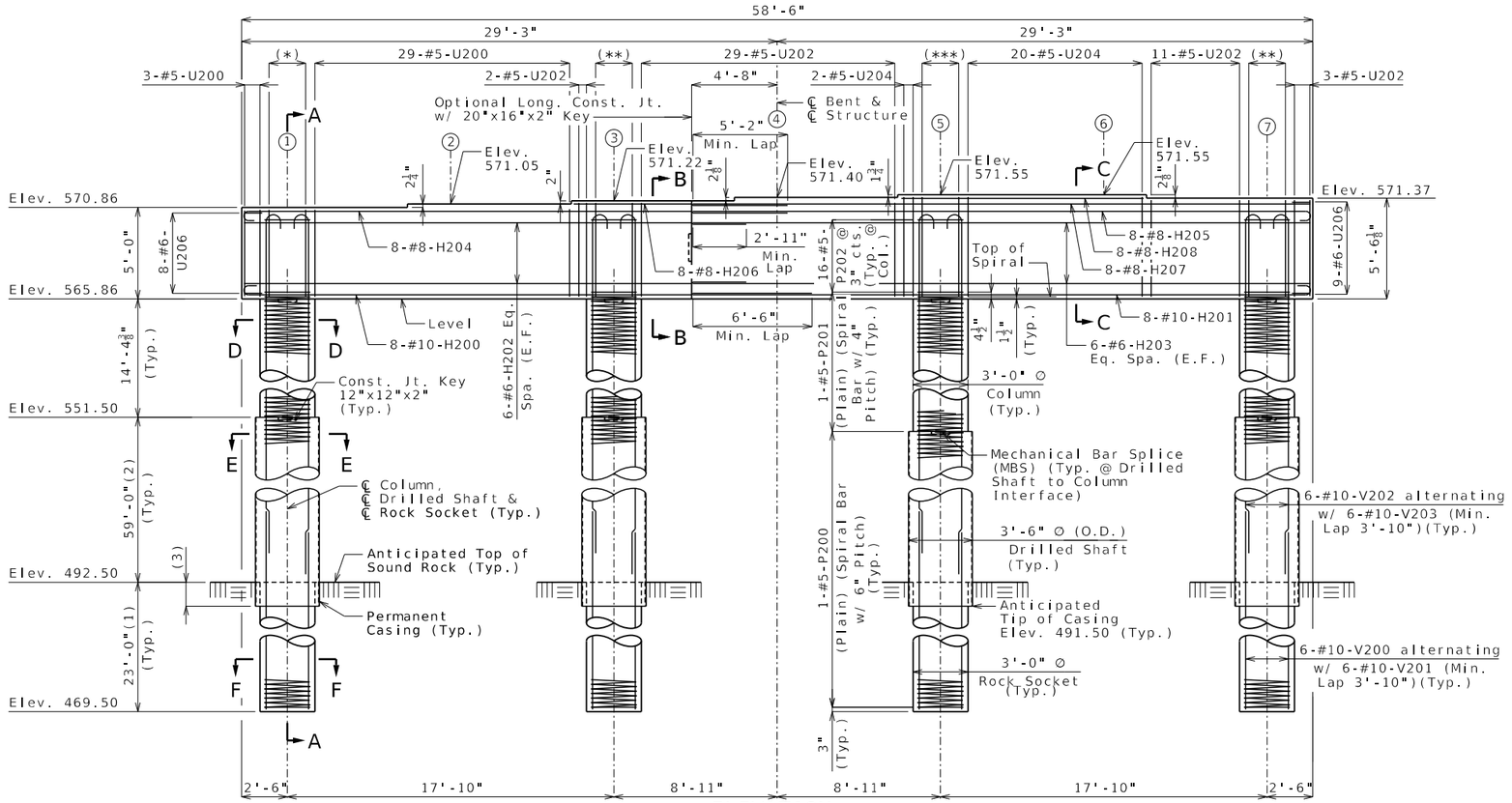

ELEVATION
(Beam keys not shown for clarity.)

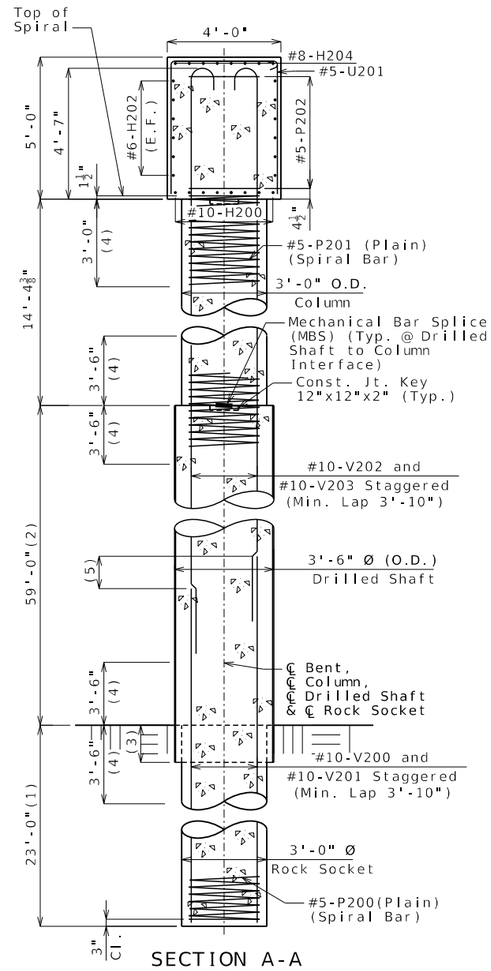

SECTION A-A

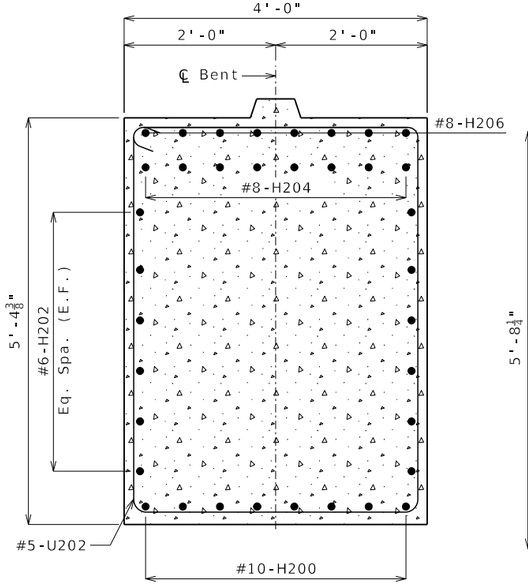

SECTION B-B

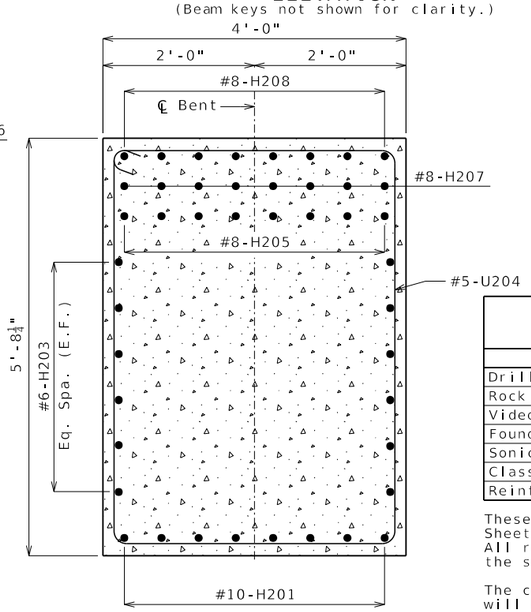

SECTION C-C

(*) 5-#5-U201

(**) 5-#5-U203

(***) 5-#5-U205

(1) Pay Item Rock Sockets (3 ft. 0 in. Dia.)

(2) Pay Item Drilled Shafts (3 ft. 6 in. Dia.)

(3) Set Steel Casing into sound rock in accordance with Sec 701 (Typ.)

(4) Lapping of spiral and vertical reinforcement is not allowed in this zone.

(5) Lap splices and mechanical bar splices, if used, are to be alternately staggered at least 2'-0" at two different locations.

Substructure Quantity Table
for Intermediate Bent No. 2

Item		Quantity
Drilled Shafts (3 ft. 6 in. Dia.)	linear foot	236
Rock Sockets (3 ft. 0 in. Dia.)	linear foot	92
Video Camera Inspection	each	4
Foundation Inspection Holes	linear foot	132
Sonic Logging Testing	each	4
Class B Concrete (Substructure)	cu. yard	62.1
Reinforcing Steel (Galvanized)	pound	40,190

These quantities are included in the Estimated Quantities table on Sheet No. 2.
All reinforcement in drilled shafts and rock sockets is included in the substructure quantities.

The cost of any required excavation to the top of the drilled shafts will be considered completely covered by the contract unit price for other items.

Notes:

The hooks of vertical bars embeded in the beam cap shall not be turned outward, away from the column core.

Work this sheet with Sheet No. 13.

Thickness of permanent steel casing shall be in accordance with Sec 701.

An additional 4 feet has been added to V-bar lengths and an additional 4 feet of height has been added to P200 and P201 length in the quantities, if required, for possible change in drilled shaft or rock socket length. The additional V-bar length shall be cut off or included in the reinforcement lap if not required. The additional P-bar length shall be cut off, with allowance for maintaining the required 1-1/2 turns at the end of spiral length. The spiral pitch shall be spaced similarly to that shown in elevation, if required, but not less than 6-inch centers in the drilled shaft and rock socket.

Sonic logging testing shall be performed on all drilled shafts and rock sockets.

(1) - Denotes Girder Number.

E.F. Denotes Each Face.

INTERMEDIATE BENT NO. 2 DETAILS

Detailed September 2025
Checked September 2025

Note: This drawing is not to scale. Follow dimensions.

STATE OF MISSOURI
RYAN DAVID SHAW
NUMBER PE-2017003388
PROFESSIONAL ENGINEER
THIS SHEET HAS BEEN SIGNED, SEALED AND DATED ELECTRONICALLY

DATE PREPARED 4/6/2026

ROUTE	STATE
I-270	MO
DISTRICT	SHEET NO.
BR	12

COUNTY ST. LOUIS

JOB NO. JSL0021

CONTRACT ID.

PROJECT NO.

BRIDGE NO. A9490

DATE | DESCRIPTION

MISSOURI HIGHWAYS AND TRANSPORTATION COMMISSION
105 WEST CAPITOL
JEFFERSON CITY, MO 65102
1-888-ASK-MODOT (1-888-275-6636)

HDR Engineering, Inc.
1001 Highlands Plaza Drive
Suite 200
St. Louis, MO 63110
314-425-8300
Certificate of Authority: 000856

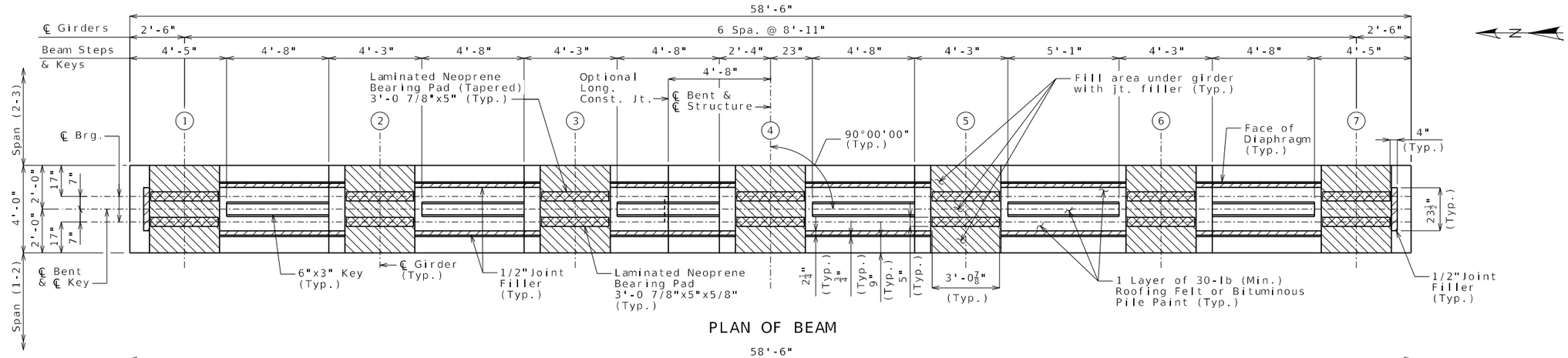

PLAN OF BEAM

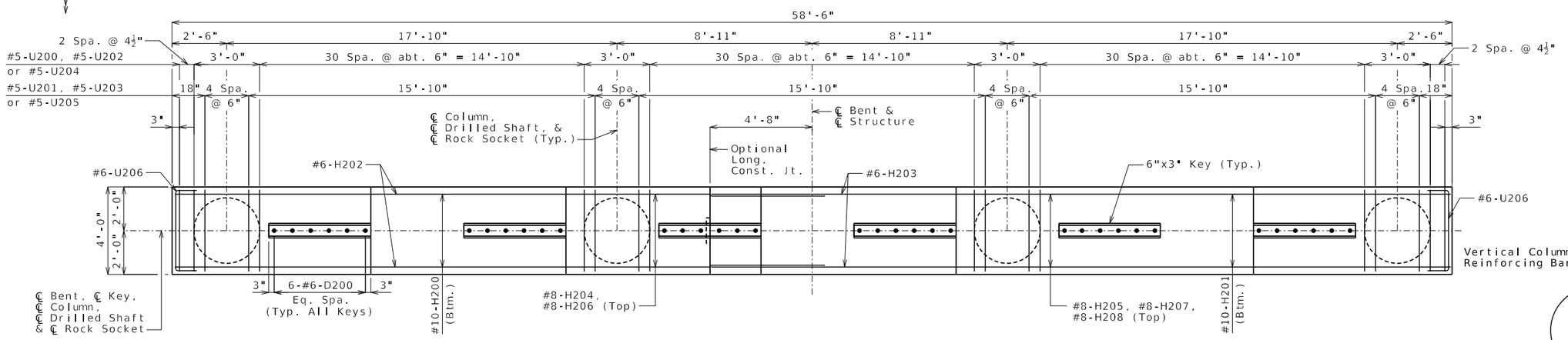

PLAN OF BEAM SHOWING REINFORCEMENT

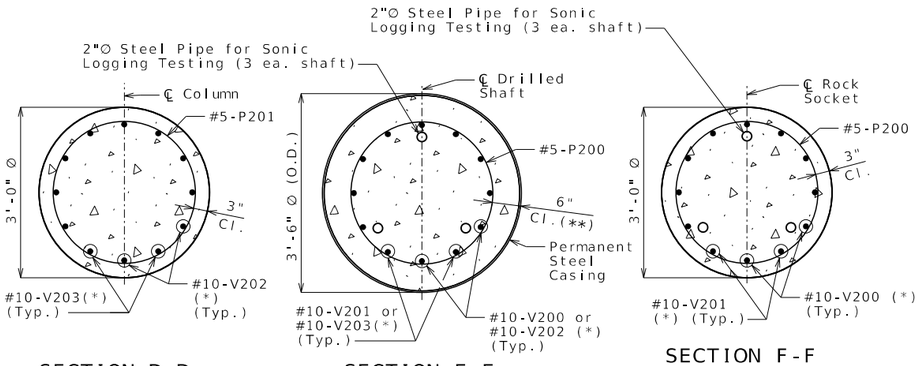

SECTION D-D SECTION E-E SECTION F-F

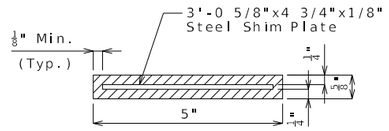

SECTION THRU LAMINATED NEOPRENE BEARING PAD (SPAN (1-2))

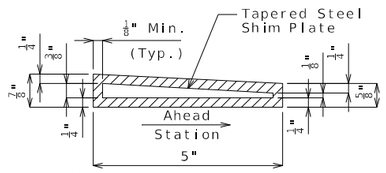

SECTION THRU LAMINATED NEOPRENE BEARING PAD (TAPERED)(SPAN (2-3))

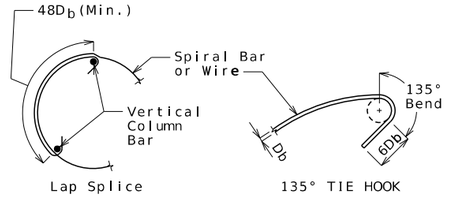

INTERMEDIATE SPLICE OF SPIRALS

Standard 135-degree tie hooks that engage vertical column reinforcing bars shall be provided at each end of splice.

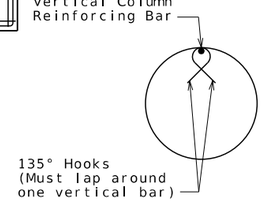

SEISMIC STIRRUP BAR

Note: Seismic hoop hooks shall be staggered around the column at about one-third of the hoop circumference.

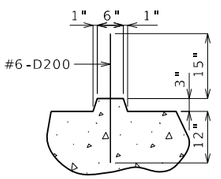

SECTION THRU KEY

(*) At Contractor's option, vertical column/drilled shaft bars may be spliced by MBS in the allowable splice zone. Splices shall be staggered a min. 2'-0" in an alternating pattern.

(**) To outside of casing.

Notes:

If contractor uses MBS for column and drilled shaft vertical reinforcement, contractor shall increase diameter of stirrup bars and seismic bars (spiral/hoop) as needed at the MBS locations. No additional payment will be made for this adjustment. Stirrup bars and seismic bars shall not be shifted to create large gaps to avoid MBS.

Work this sheet with Sheet No. 12.

For Diaphragm Details, see Sheet No. 22.

For steps of 2 inches or more, use 2 1/4 x 1/2 inch Joint Filler up vertical face.

(1) - Denotes girder number.

INTERMEDIATE BENT NO. 2 DETAILS

Detailed September 2025
Checked September 2025

Note: This drawing is not to scale. Follow dimensions.

RYAN DAVID SHAW NUMBER PE-2017003268 PROFESSIONAL ENGINEER STATE OF MISSOURI

THIS SHEET HAS BEEN SIGNED, SEALED AND DATED ELECTRONICALLY

DATE PREPARED 4/1/2026

ROUTE	STATE
I-270	MO
DISTRICT	SHEET NO.
BR	13

COUNTY ST. LOUIS

JOB NO. JSL0021

CONTRACT ID.

PROJECT NO.

BRIDGE NO. A9490

DESCRIPTION

DATE

MISSOURI HIGHWAYS AND TRANSPORTATION COMMISSION
105 WEST CAPITOL
JEFFERSON CITY, MO 65102
1-888-ASK-MODOT (1-888-275-6636)

HDR Engineering, Inc.
1001 Highlands Plaza Drive
Suite 200
St. Louis, MO 63110
314-425-8300
Certificate of Authority: 000856

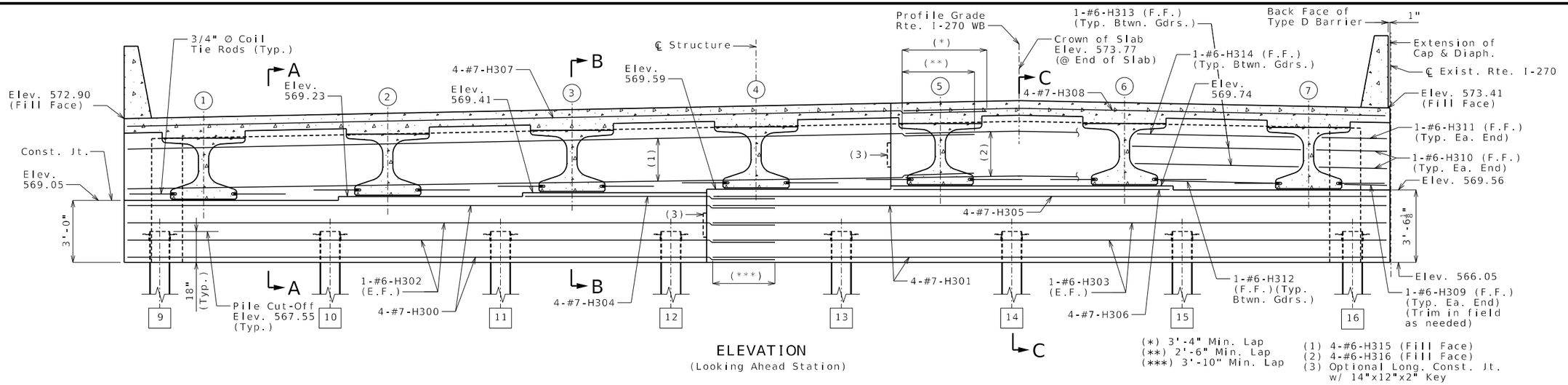

ELEVATION
(Looking Ahead Station)

(*) 3'-4" Min. Lap
(**) 2'-6" Min. Lap
(***) 3'-10" Min. Lap

(1) 4-#6-H315 (Fill Face)
(2) 4-#6-H316 (Fill Face)
(3) Optional Long. Const. Jt. w/ 14"x12"x2" Key

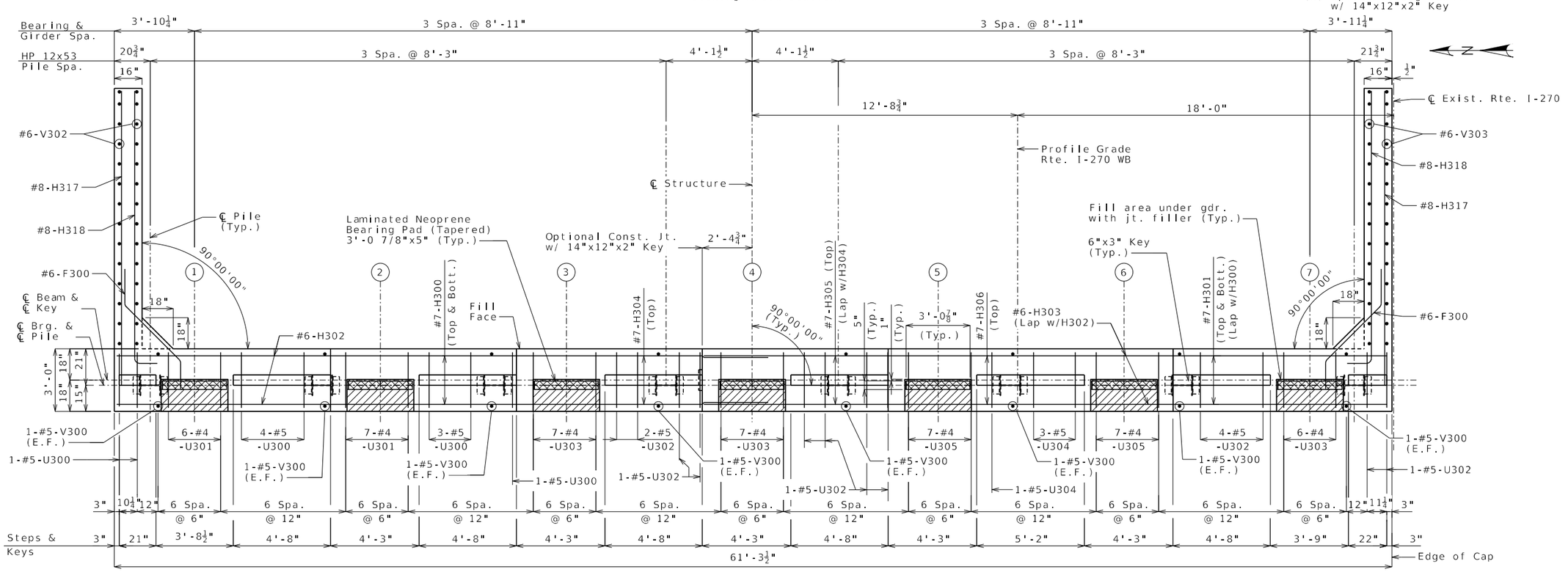

PLAN OF BEAM
(Horizontal dimensions are measured along ℄ Piles and ℄ Brg.)

Substructure Quantity Table for End Bent No. 3		
Item		Quantity
Galvanized Structural Steel Piles (12 in.)	linear foot	616
Pile Point Reinforcement	each	8
Class B Concrete (Substructure)	cu. yard	27.6
Pipe Pile Spacers	each	8

These quantities are included in the Estimated Quantities table on Sheet No. 2.

Detailed September 2025
Checked September 2025

Notes:

Work this sheet with Sheets No. 15 & 16.

For Key Details, Pile Anchor Details and Steel Pile Splice Detail, see Sheet No. 16.

For location of coil tie rods, see Sheets No. 20 & 21.

Notes (Cont.):

Reinforcing steel shall be shifted to clear piles. U-bars shall clear piles by at least 1 1/2 inches.

Strands at ends of girders shall be field bent or, if necessary, cut in field to maintain 1 1/2-inch minimum clearance to fill face of end bent.

All concrete in the end bent above top of beam and below top of slab shall be Class B-2.

#6-F300 bars shall be bent in field to clear girders.

Notes (Cont.):

For details and reinforcement of barriers at end bent, see Sheet No. 31.

E.F. Denotes Each Face.

F.F. Denotes Front Face.

(1) - Denotes girder number.

[1] - Denotes pile number.

END BENT NO. 3 DETAILS

Note: This drawing is not to scale. Follow dimensions.

RYAN DAVID SHAW
NUMBER PE-2017002368
STATE OF MISSOURI
PROFESSIONAL ENGINEER
THIS SHEET HAS BEEN SIGNED, SEALED AND DATED ELECTRONICALLY

DATE PREPARED 4/1/2026
ROUTE I-270 | STATE MO
DISTRICT BR | SHEET NO. 14
COUNTY ST. LOUIS
JOB NO. JSL0021
CONTRACT ID.
PROJECT NO.
BRIDGE NO. A9490

DESCRIPTION | DATE

MISSOURI HIGHWAYS AND TRANSPORTATION COMMISSION
105 WEST CAPITOL
JEFFERSON CITY, MO 65102
1-888-ASK-MODOT (1-888-275-6636)

HDR Engineering, Inc.
1001 Highlands Plaza Drive
Suite 200
St. Louis, MO 63110
314-425-8300
Certificate of Authority: 000856

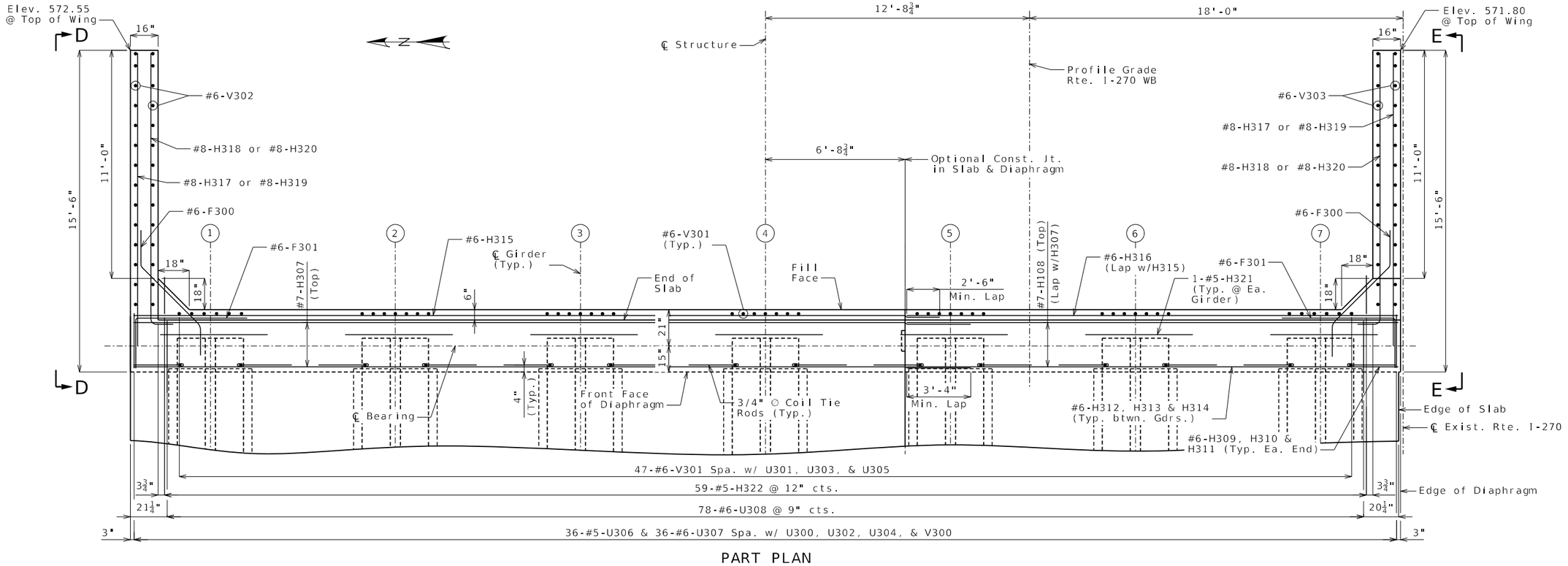

PART PLAN

(Horizontal dimensions are measured along ℄ Brg.)

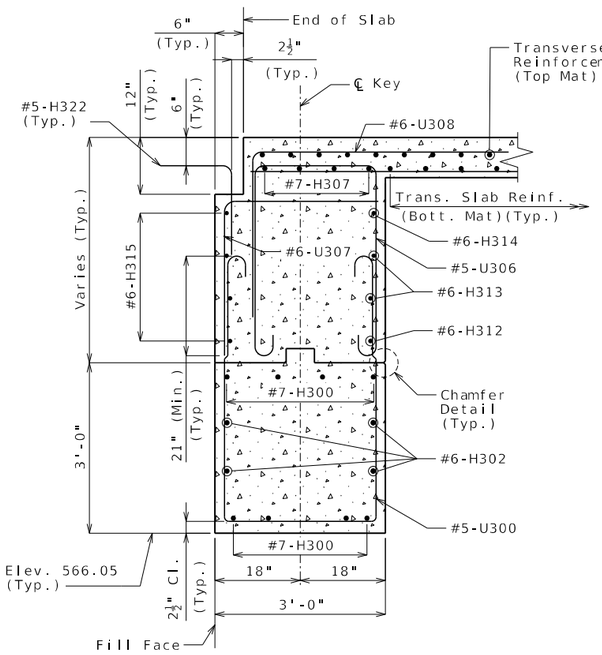

SECTION A-A

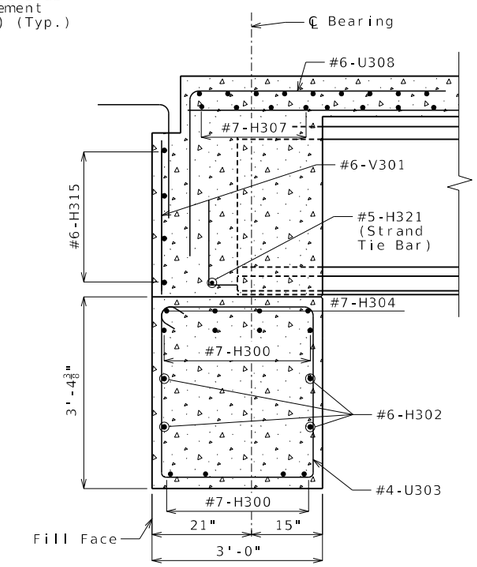

SECTION B-B

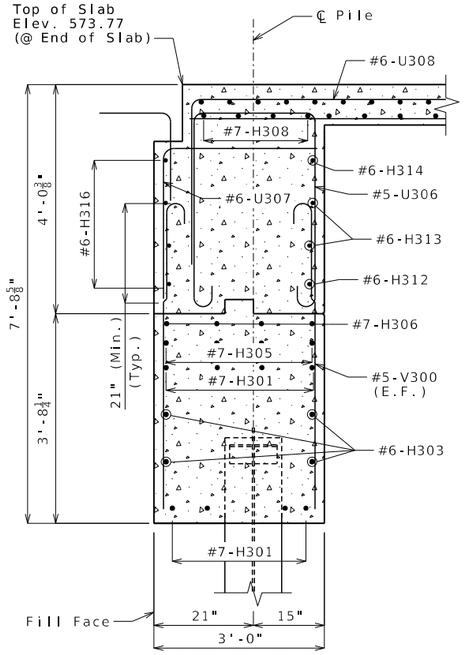

SECTION C-C

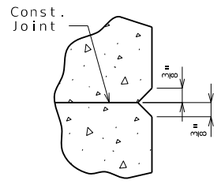

CHAMFER DETAIL

END BENT NO. 3 DETAILS

Notes:

Work this sheet with Sheets No. 14 & 16.

#6-F300 bars shall be bent in the field to clear girders.

For location of Sections A-A thru C-C, see Sheet No. 14.

For Elevations D-D and E-E, see Sheet No. 16.

For Key details, Pile Anchor details and Pile Splice details, see Sheet No. 16.

For location of coil tie rods and #5-H321 (strand tie bar), see Sheets No. 20 & 21.

For details and reinforcement of barriers at end bent, see Sheet No. 31.

E.F. Denotes Each Face.

(1) - Denotes girder number.

STATE OF MISSOURI
RYAN DAVID SHAW
NUMBER PE-2017000388
PROFESSIONAL ENGINEER
THIS SHEET HAS BEEN SIGNED, SEALED AND DATED ELECTRONICALLY

DATE PREPARED 4/6/2026

ROUTE	STATE
I-270	MO
DISTRICT	SHEET NO.
BR	15

COUNTY: ST. LOUIS

JOB NO.: JSL0021

CONTRACT ID.:

PROJECT NO.:

BRIDGE NO.: A9490

DESCRIPTION	DATE

MISSOURI HIGHWAYS AND TRANSPORTATION COMMISSION
105 WEST CAPITOL
JEFFERSON CITY, MO 65102
1-888-ASK-MODOT (1-888-275-6636)

HDR Engineering, Inc.
1001 Highlands Plaza Drive
Suite 200
St. Louis, MO 63110
314-425-8300
Certificate of Authority: 000856

Detailed September 2025
Checked September 2025

Note: This drawing is not to scale. Follow dimensions.

c:\pwworking\central01\d4975495\B_A9490_015_SL0021.dgn 12:06:10 PM 4/6/2026

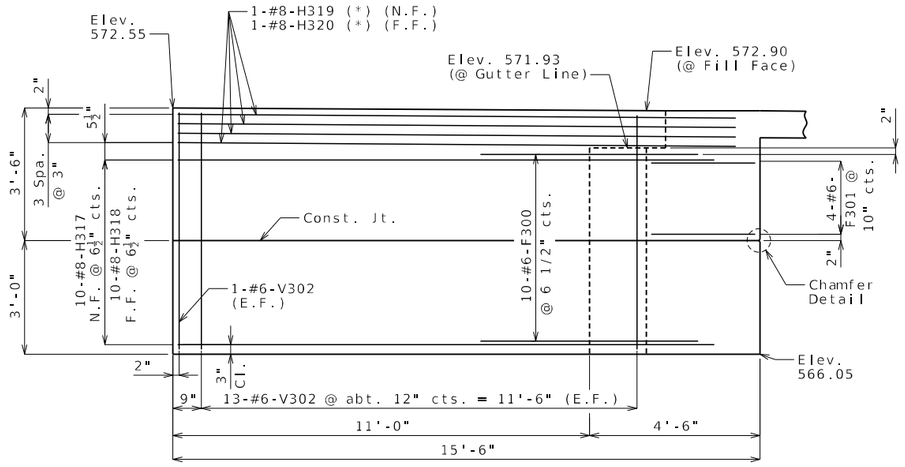

ELEVATION D-D

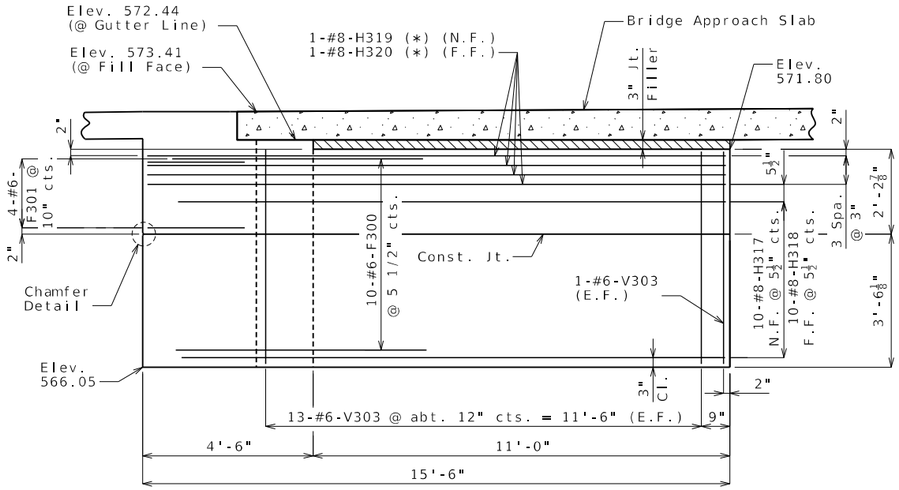

ELEVATION E-E

Notes:

All dimensions and elevations given at outside face of wing unless otherwise noted.

The #6-F300 bars shall be bent in the field to clear girders.

(*) Place with grade

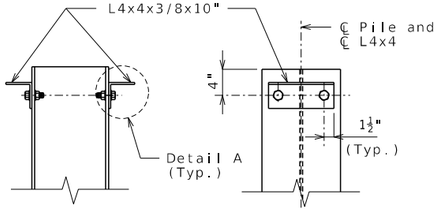

DETAILS OF HP PILE ANCHORS

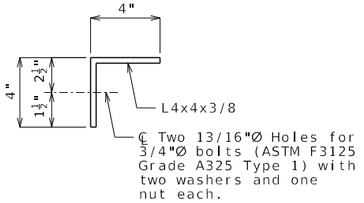

DETAIL A

Angles shall be coated with a minimum of two coats of non-aluminum epoxy mastic primer to provide a dry film thickness of 4 mils minimum, 8 mils maximum, or galvanized in accordance with Sec 1081. Bolts, washers and nuts shall be galvanized in accordance with AASHTO M 232 (ASTM A153), Class C.

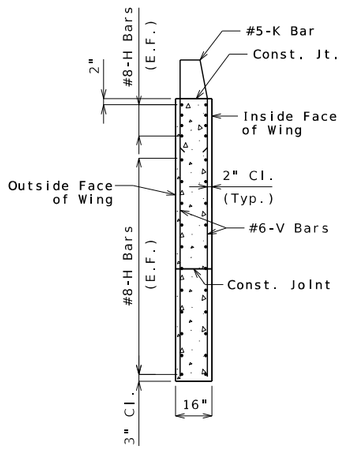

TYPICAL SECTION THRU LEFT WING

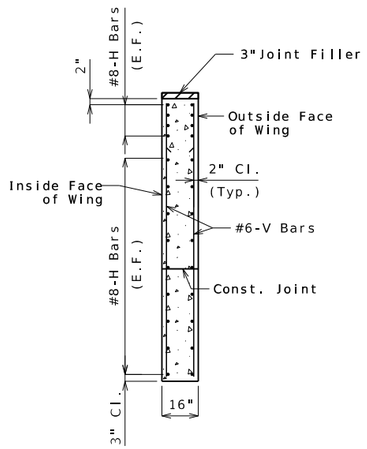

TYPICAL SECTION THRU RIGHT WING

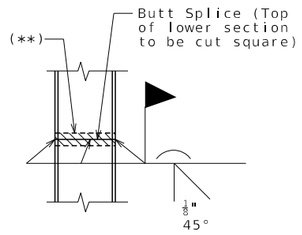

STEEL PILE SPLICE

(If required)

(**) Galvanizing material shall be omitted or removed one inch clear of weld locations in accordance with Sec 702.

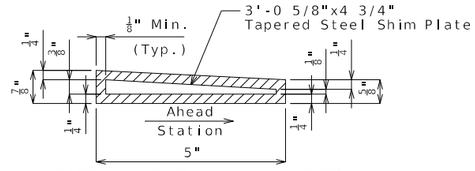

SECTION THRU LAMINATED NEOPRENE BEARING PAD (TAPERED)

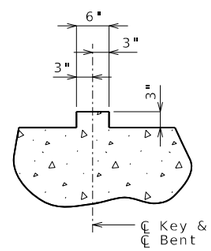

TYPICAL SECTION THRU KEY

Notes:

Work this sheet with Sheets No. 14 & 15.

For Chamfer Detail, see Sheet No. 15.

Seal joint between vertical faces of end bent beams and diaphragms of Bridge No. A9489 with the vertical faces of Bridge No. A9490. Preformed compression joint seal shall be in accordance with Sec 717. Payment will be considered covered by the contract unit price for other items included in the contract.

For Modified Type D Barrier (Right) at Approach Slab, see Sheet No. 32.

For location of Elevations D-D and E-E, see Sheet No. 15.

For details and reinforcement of barriers at end bent, see Sheet No. 31.

E.F. Denotes Each Face.

F.F. Denotes Far Face.

N.F. Denotes Near Face.

END BENT NO. 3 DETAILS

STATE OF MISSOURI
RYAN DAVID SHAW
NUMBER PE-2017003268
PROFESSIONAL ENGINEER
THIS SHEET HAS BEEN SIGNED, SEALED AND DATED ELECTRONICALLY

DATE PREPARED 4/1/2026

ROUTE	STATE
I-270	MO
DISTRICT	SHEET NO.
BR	16

COUNTY: ST. LOUIS

JOB NO.: JSL0021

CONTRACT ID.:

PROJECT NO.:

BRIDGE NO.: A9490

DESCRIPTION | DATE

MISSOURI HIGHWAYS AND TRANSPORTATION COMMISSION
105 WEST CAPITOL
JEFFERSON CITY, MO 65102
1-888-ASK-MODOT (1-888-275-6636)

HDR Engineering, Inc.
1001 Highlands Plaza Drive
Suite 200
St. Louis, MO 63110
314-425-8300
Certificate of Authority: 000856

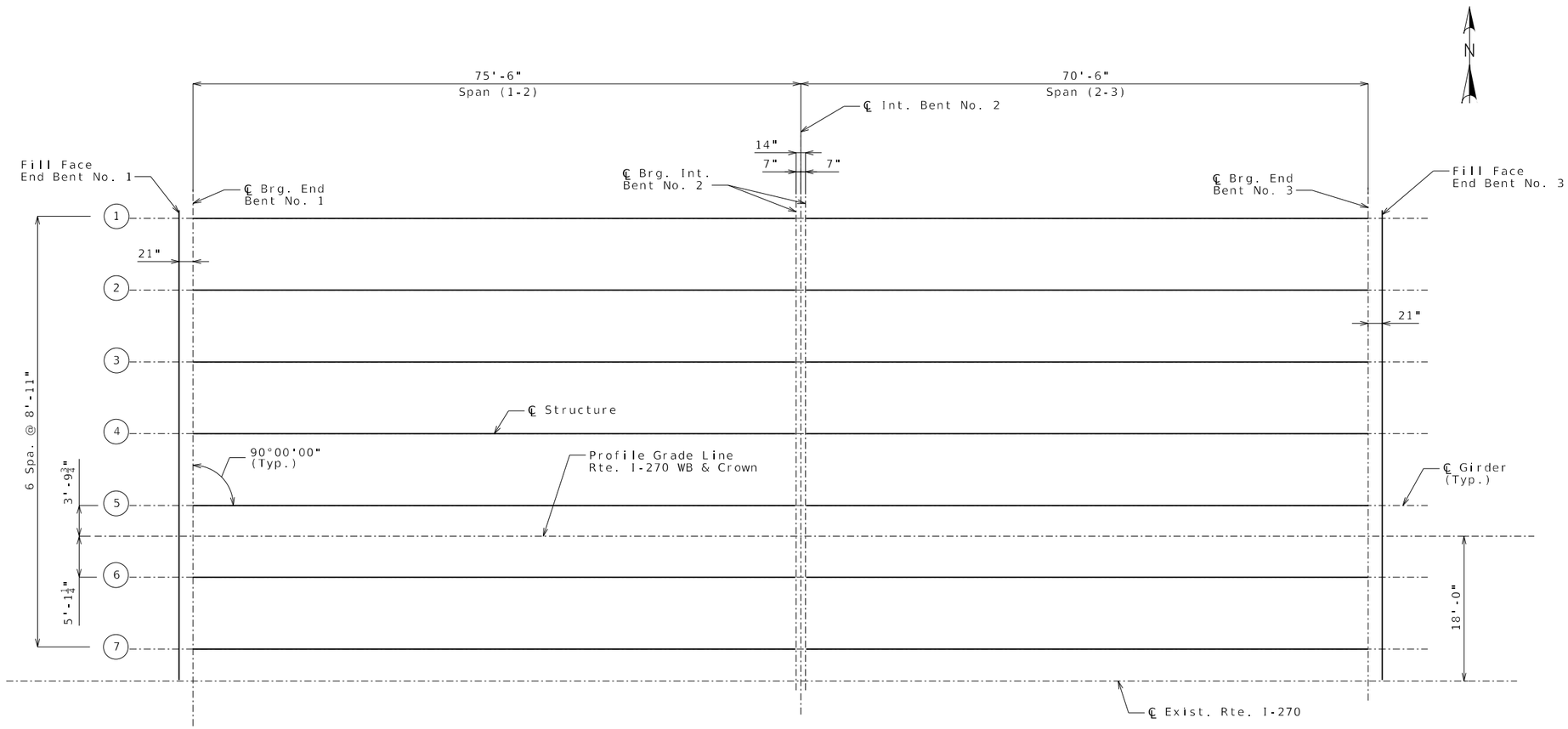

PLAN SHOWING PRESTRESSED CONCRETE NU-GIRDER LAYOUT

Notes:

All longitudinal dimensions are measured horizontal.

All girders are parallel.

(1) - Denotes girder number.

GIRDER LAYOUT

Detailed September 2025
Checked September 2025

Note: This drawing is not to scale. Follow dimensions.

RYAN DAVID SHAW
NUMBER PE-2017000368
PROFESSIONAL ENGINEER
STATE OF MISSOURI
THIS SHEET HAS BEEN SIGNED, SEALED AND DATED ELECTRONICALLY

DATE PREPARED
4/1/2026

ROUTE I-270 | STATE MO
DISTRICT BR | SHEET NO. 17
COUNTY ST. LOUIS
JOB NO. JSL0021
CONTRACT ID.
PROJECT NO.
BRIDGE NO. A9490

DESCRIPTION | DATE

MISSOURI HIGHWAYS AND TRANSPORTATION COMMISSION
105 WEST CAPITOL
JEFFERSON CITY, MO 65102
1-888-ASK-MODOT (1-888-275-6636)

HDR Engineering, Inc.
1001 Highlands Plaza Drive
Suite 200
St. Louis, MO 63110
314-425-8300
Certificate of Authority: 000856

(1) Fabricator shall apply a bond breaker to this region.

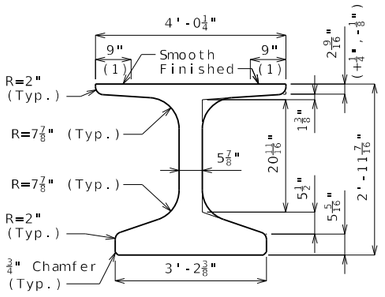

DIMENSIONS

(2) Outer strands tensioned to 2.02 kips/strand and inner strands to 8 kips/strand. Placed symmetrical about ℄ Girder. May be moved laterally in pairs.

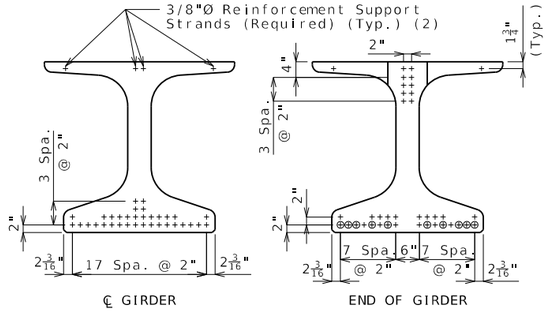

STRAND ARRANGEMENT

+ Indicates prestressing strand.

o Indicates cut & shop bend with 3'-0" projection.

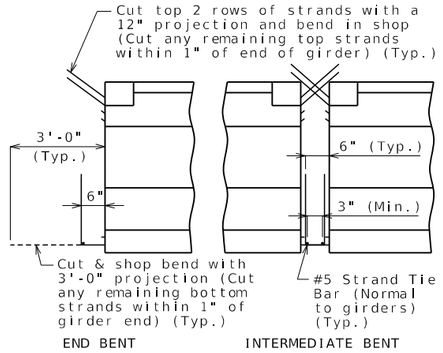

STRANDS AT GIRDER ENDS

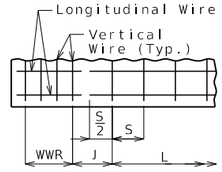

WELDED WIRE PLACEMENT

S = Vertical wire spacing

L = Length of WWR mats

J = Distance between WWR mats

Bill of Reinforcing Steel

Bars Each Girder

No.	Size/Mark	Length	Shape
96	3 G1	2'-10"	8
2	4 G3	3'-10"	20
2	4 G4	2'-3"	20
2	4 G5	2'-8"	20

Welded Wire Each Girder

Mark	Size	S	W	L	J
WWR1	D31	4"	W12	8'-4"	8"
WWR2	D31	8"	W12	10'-0"	5½"
WWR3	D31	12"	W12	33'-0"	--
WWR6	D31	2"	W12	16"	4"

Bending Diagrams

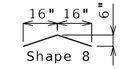

Shape 20

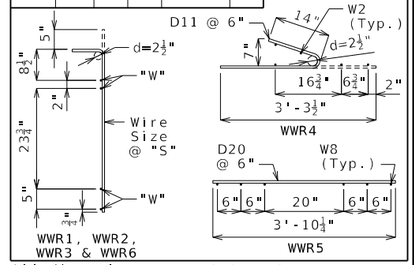

All dimensions are out to out.

Hooks and bends shall be in accordance with the CRSI Manual of Standard Practice for Detailing Reinforced Concrete Structures, Stirrup and Tie Dimensions.

Actual bar lengths are measured along centerline of bar to the nearest inch.

Minimum clearance to reinforcing shall be 1", unless otherwise shown.

All bar reinforcement shall be ASTM A706 Grade 60.

WWR shall not be epoxy coated.

G4 and G5 not required for interior girders. Half no. of G3, G4 and G5 not required for ext. girders of end spans.

General Notes:

Concrete for prestressed beams shall be Class A-1 with f'c = 8000 psi and f'ci = 6500 psi.

Use 34 strands, 0.6"Ø Grade 270, with an initial prestress force of 1494 kips.

Pretensioned members shall be in accordance with Sec 1029.

Fabricator shall be responsible for location and design of lifting devices.

Exterior and interior girders are the same except: coil ties and top flange blockout.

The contractor shall provide bracing necessary for lateral and torsional stability of the girders during construction of the concrete slab and remove the bracing after the slab has attained 75% design strength. Contractor shall not drill holes in the girders.

For Girder Camber Diagram, see Sheet No. 25.

For location of coil ties at concrete diaphragms and integral bents, see Sheets No. 8, 9 & 22.

Alternate bar reinforcing steel details are provided and may be used. The same type of reinforcing steel shall be used for all girders in all spans.

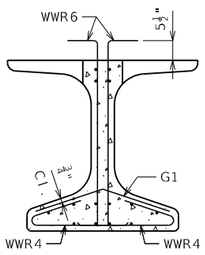

SECTION A-A

Strands not shown for clarity.

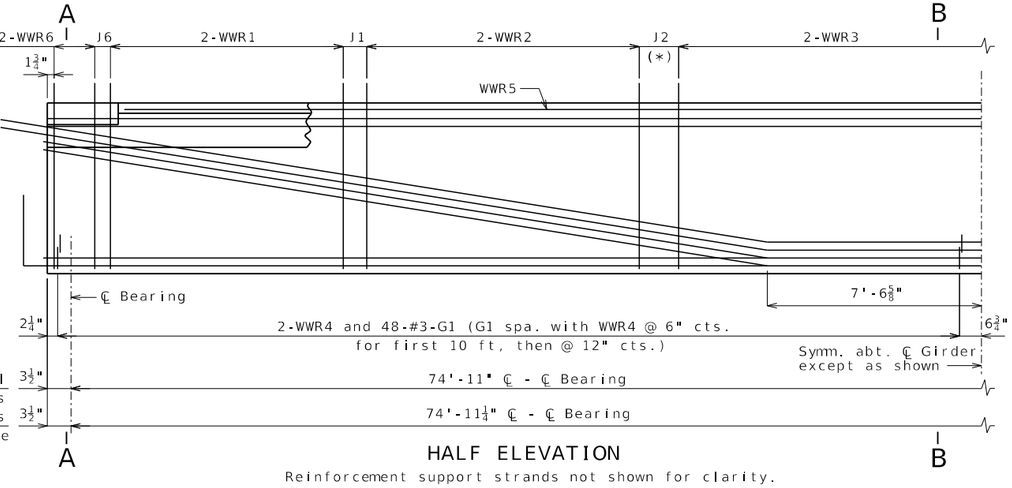

HALF ELEVATION

Reinforcement support strands not shown for clarity.

(*) Reinforcement spacing shown is based on horizontal girder dimensions. Adjust "J2" dimension as required for girder dimension along grade.

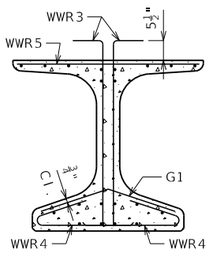

SECTION B-B

Strands not shown for clarity.

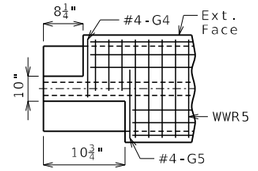

LEFT EXTERIOR GIRDER AT INTERMEDIATE BENT

Rotate 180° for right ext.

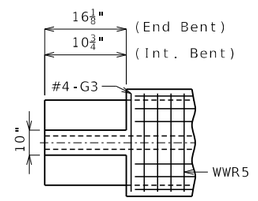

INTERIOR GIRDER AT ALL BENTS & EXTERIOR GIRDER AT END BENT

TOP FLANGE BLOCKOUT

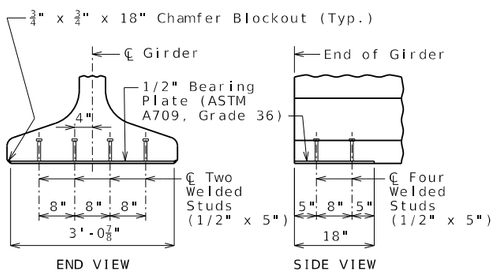

BEARING PLATE

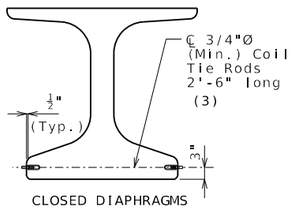

CLOSED DIAPHRAGMS AND INTEGRAL BENTS

COIL TIES

Exclude coil tie at exterior face of exterior girders except at integral end bents.

(3) 2'-3" at exterior face of exterior girders at end bents

NU-GIRDERS - SPAN (1-2)

Detailed September 2025
Checked September 2025

Note: This drawing is not to scale. Follow dimensions.

RYAN DAVID SHAW NUMBER PE-2017000388 PROFESSIONAL ENGINEER
THIS SHEET HAS BEEN SIGNED, SEALED AND DATED ELECTRONICALLY

DATE PREPARED 4/1/2026

ROUTE I-270 | STATE MO

DISTRICT BR | SHEET NO. 18

COUNTY ST. LOUIS

JOB NO. JSL0021

CONTRACT ID.

PROJECT NO.

BRIDGE NO. A9490

DESCRIPTION | DATE

MISSOURI HIGHWAYS AND TRANSPORTATION COMMISSION
105 WEST CAPITOL
JEFFERSON CITY, MO 65102
1-888-ASK-MODOT (1-888-275-6636)

HDR Engineering, Inc.
1001 Highlands Plaza Drive
Suite 200
St. Louis, MO 63110
314-425-8300
Certificate of Authority: 000856

(1) Fabricator shall apply a bond breaker to this region.

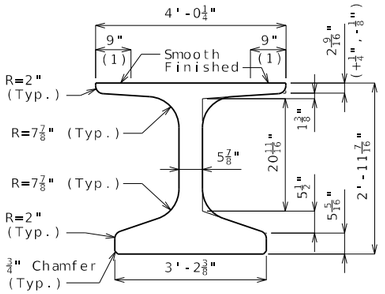

DIMENSIONS

(2) Outer strands tensioned to 2.02 kips/strand and inner strands to 8 kips/strand. Placed symmetrical about ℄ Girder. May be moved laterally in pairs.

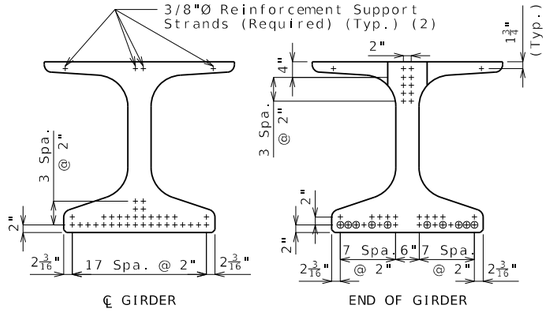

\+ Indicates prestressing strand.

o Indicates cut & shop bend with 3'-0" projection.

STRAND ARRANGEMENT

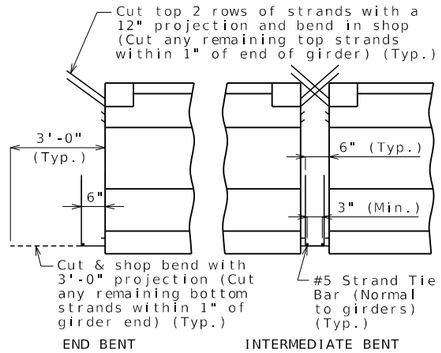

STRANDS AT GIRDER ENDS

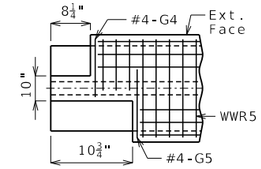

LEFT EXTERIOR GIRDER AT INTERMEDIATE BENT
Rotate 180° for right ext.

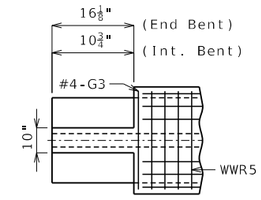

INTERIOR GIRDER AT ALL BENTS & EXTERIOR GIRDER AT END BENT

TOP FLANGE BLOCKOUT

Bill of Reinforcing Steel - Each Girder			
No.	Size/ Mark	Length	Shape
208	4 B1	4'-4"	11S
228	4 D1	4'-0"	9S
2	4 G3	3'-10"	20
2	4 G4	2'-3"	20
2	4 G5	2'-8"	20

Bending Diagrams

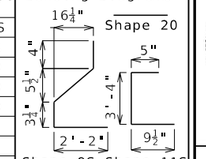

Welded Wire Reinforcement - Each Girder

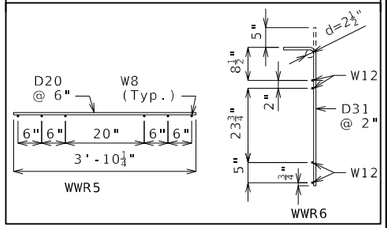

All dimensions are out to out.

Hooks and bends shall be in accordance with the CRSI Manual of Standard Practice for Detailing Reinforced Concrete Structures, Stirrup and Tie Dimensions.

Actual bar lengths are measured along centerline of bar to the nearest inch.

Minimum clearance to reinforcing shall be one inch.

All bar reinforcement shall be ASTM A706 Grade 60.

The two D1 bars may be furnished as one bar at the fabricator's option.

All B1 bars shall be epoxy coated. G4 and G5 not required for interior girders. Half no. of G3, G4 and G5 not required for ext. girders of end spans.

General Notes:

Concrete for prestressed girders shall be Class A-1 with f'c = 8000 psi and f'ci = 6500 psi.

Use 34 strands, 0.6"Ø Grade 270, with an initial prestress force of 1494 kips.

Pretensioned members shall be in accordance with Sec 1029.

Fabricator shall be responsible for location and design of lifting devices.

Exterior and interior girders are the same except: coil ties and top flange blockout.

The contractor shall provide bracing necessary for lateral and torsional stability of the girders during construction of the concrete slab and remove the bracing after the slab has attained 75% design strength. Contractor shall not drill holes in the girders.

For Girder Camber Diagram, see Sheet No. 25.

For location of coil ties at concrete diaphragms and integral bents, see Sheets No. 8, 9 & 22.

Alternate bar reinforcing steel details are provided and may be used. The same type of reinforcing steel shall be used for all girders in all spans.

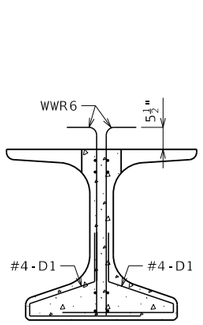

SECTION A-A

Strands not shown for clarity.

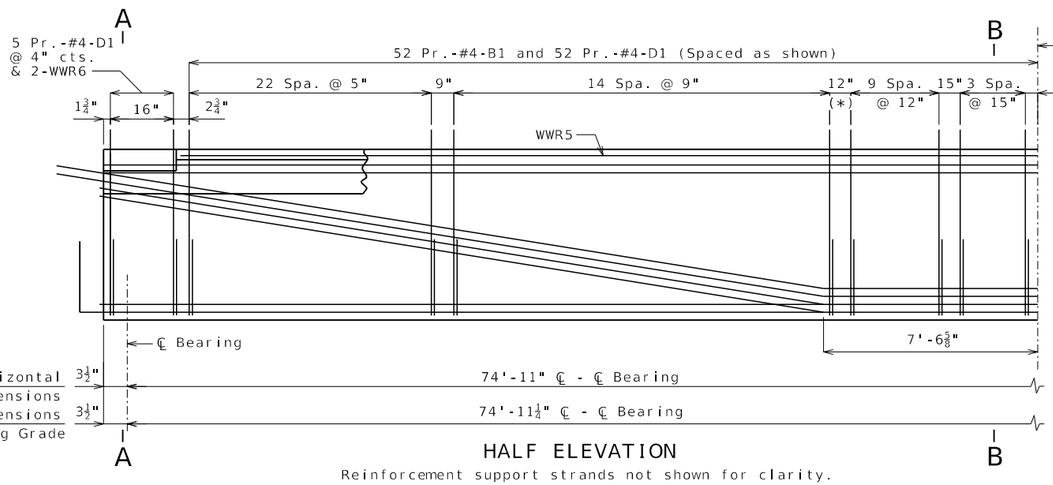

HALF ELEVATION

Reinforcement support strands not shown for clarity.

(*) Reinforcement spacing shown is based on horizontal girder dimensions. Adjust dimension as required for girder dimension along grade.

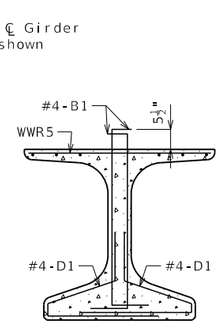

SECTION B-B

Strands not shown for clarity.

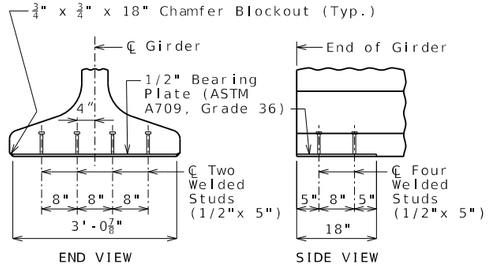

BEARING PLATE

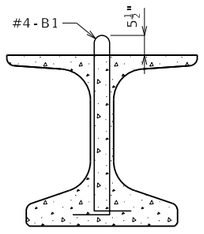

B1 BAR PERMISSIBLE ALTERNATE SHAPE

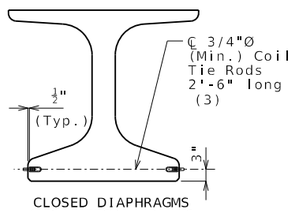

CLOSED DIAPHRAGMS AND INTEGRAL BENTS

COIL TIES

Exclude coil tie at exterior face of exterior girders except at integral end bents.

(3) 2'-3" at exterior face of exterior girders at end bents

NU-GIRDERS (ALTERNATE REINFORCEMENT) - SPAN (1-2)

Detailed September 2025
Checked September 2025

Note: This drawing is not to scale. Follow dimensions.

RYAN DAVID SHAW NUMBER PE-2017003268 STATE OF MISSOURI PROFESSIONAL ENGINEER

THIS SHEET HAS BEEN SIGNED, SEALED AND DATED ELECTRONICALLY

DATE PREPARED 4/1/2026

ROUTE I-270 | STATE MO

DISTRICT BR | SHEET NO. 19

COUNTY ST. LOUIS

JOB NO. JSL0021

CONTRACT ID.

PROJECT NO.

BRIDGE NO. A9490

DESCRIPTION | DATE

MISSOURI HIGHWAYS AND TRANSPORTATION COMMISSION
105 WEST CAPITOL
JEFFERSON CITY, MO 65102
1-888-ASK-MODOT (1-888-275-6636)

HDR Engineering, Inc.
1001 Highlands Plaza Drive
Suite 200
St. Louis, MO 63110
314-425-8300
Certificate of Authority: 000856

(1) Fabricator shall apply a bond breaker to this region.

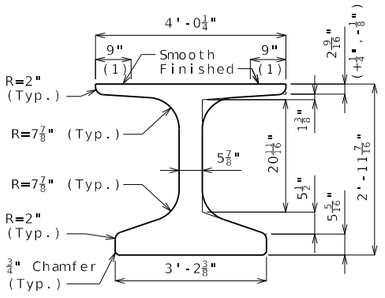

DIMENSIONS

(2) Outer strands tensioned to 2.02 kips/strand and inner strands to 8 kips/strand. Placed symmetrical about ℄ Girder. May be moved laterally in pairs.

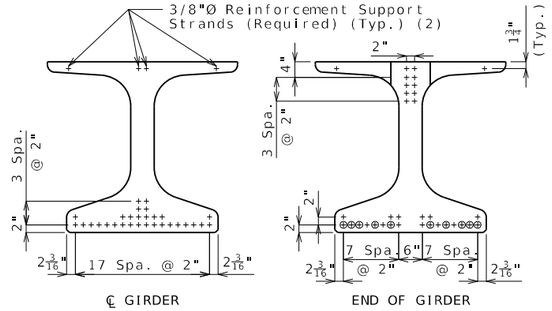

\+ Indicates prestressing strand.

○ Indicates cut & shop bend with 3'-0" projection.

STRAND ARRANGEMENT

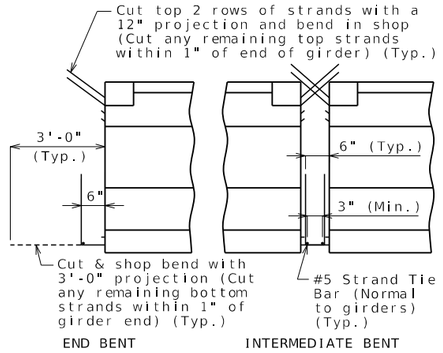

STRANDS AT GIRDER ENDS

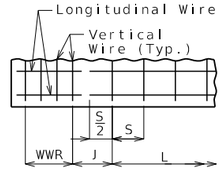

WELDED WIRE PLACEMENT

S = Vertical wire spacing

L = Length of WWR mats

J = Distance between WWR mats

Bill of Reinforcing Steel

Bars Each Girder

No.	Size/Mark	Length	Shape
92	3 G1	2'-10"	8
2	4 G3	3'-10"	20
2	4 G4	2'-3"	20
2	4 G5	2'-8"	20

Welded Wire Each Girder

Mark	Size	S	W	L	J
WWR1	D31	4"	W12	8'-4"	8"
WWR2	D31	8"	W12	10'-0"	5½"
WWR3	D31	12"	W12	28'-0"	--
WWR6	D31	2"	W12	16"	4"

Bending Diagrams

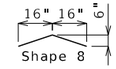

Shape 20

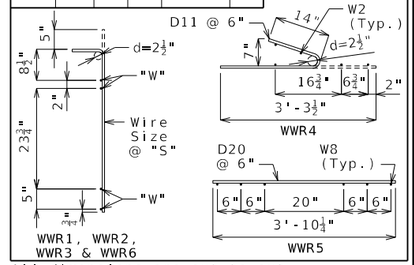

All dimensions are out to out.

Hooks and bends shall be in accordance with the CRSI Manual of Standard Practice for Detailing Reinforced Concrete Structures, Stirrup and Tie Dimensions.

Actual bar lengths are measured along centerline of bar to the nearest inch.

Minimum clearance to reinforcing shall be 1", unless otherwise shown.

All bar reinforcement shall be ASTM A706 Grade 60.

WWR shall not be epoxy coated.

G4 and G5 not required for interior girders. Half no. of G3, G4 and G5 not required for ext. girders of end spans.

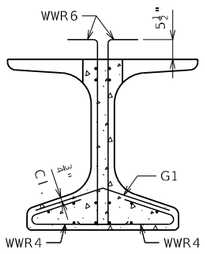

SECTION A-A

Strands not shown for clarity.

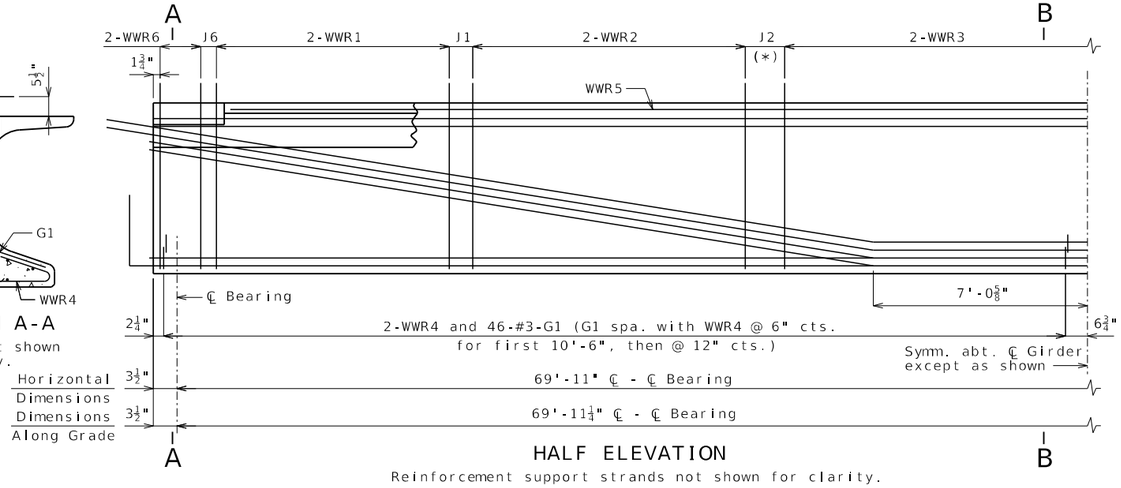

HALF ELEVATION

Reinforcement support strands not shown for clarity.

(*) Reinforcement spacing shown is based on horizontal girder dimensions. Adjust "J2" dimension as required for girder dimension along grade.

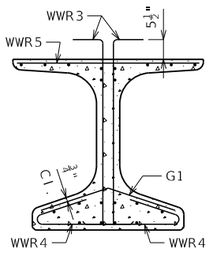

SECTION B-B

Strands not shown for clarity.

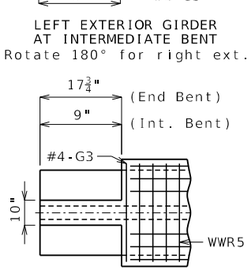

LEFT EXTERIOR GIRDER AT INTERMEDIATE BENT
Rotate 180° for right ext.

INTERIOR GIRDER AT ALL BENTS & EXTERIOR GIRDER AT END BENT

TOP FLANGE BLOCKOUT

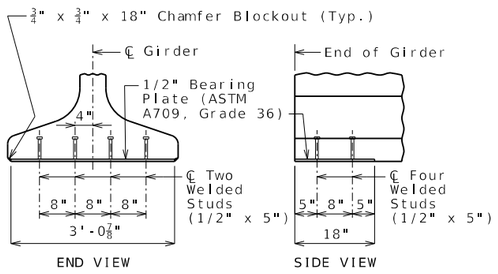

BEARING PLATE

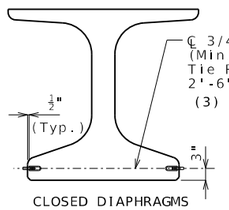

CLOSED DIAPHRAGMS AND INTEGRAL BENTS

COIL TIES

Exclude coil tie at exterior face of exterior girders except at integral end bents.

(3) 2'-3" at exterior face of exterior girders at end bents

NU-GIRDERS - SPAN (2-3)

Detailed September 2025
Checked September 2025

Note: This drawing is not to scale. Follow dimensions.

RYAN DAVID SHAW NUMBER PE-2011000388 PROFESSIONAL ENGINEER STATE OF MISSOURI

THIS SHEET HAS BEEN SIGNED, SEALED AND DATED ELECTRONICALLY

DATE PREPARED 4/1/2026

ROUTE I-270 | STATE MO

DISTRICT BR | SHEET NO. 20

COUNTY ST. LOUIS

JOB NO. JSL0021

CONTRACT ID.

PROJECT NO.

BRIDGE NO. A9490

DESCRIPTION | DATE

MISSOURI HIGHWAYS AND TRANSPORTATION COMMISSION

105 WEST CAPITOL
JEFFERSON CITY, MO 65102
1-888-ASK-MODOT (1-888-275-6636)

HDR Engineering, Inc.
1001 Highlands Plaza Drive
Suite 200
St. Louis, MO 63110
314-425-8300
Certificate of Authority: 000856

(1) Fabricator shall apply a bond breaker to this region.

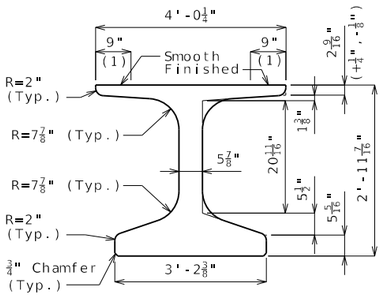

DIMENSIONS

(2) Outer strands tensioned to 2.02 kips/strand and inner strands to 8 kips/strand. Placed symmetrical about ℄ Girder. May be moved laterally in pairs.

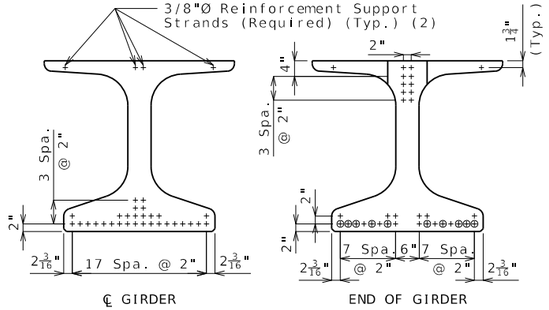

\+ Indicates prestressing strand.

o Indicates cut & shop bend with 3'-0" projection.

STRAND ARRANGEMENT

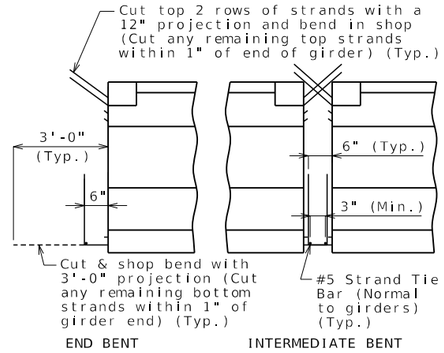

STRANDS AT GIRDER ENDS

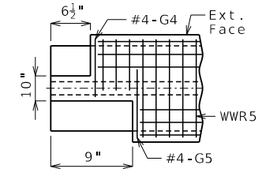

LEFT EXTERIOR GIRDER AT INTERMEDIATE BENT
Rotate 180° for right ext.

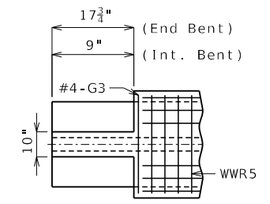

INTERIOR GIRDER AT ALL BENTS & EXTERIOR GIRDER AT END BENT

TOP FLANGE BLOCKOUT

Bill of Reinforcing Steel - Each Girder			
No.	Size/ Mark	Length	Shape
200	4 B1	4'-4"	11S
220	4 D1	4'-0"	9S
2	4 G3	3'-10"	20
2	4 G4	2'-3"	20
2	4 G5	2'-8"	20

Bending Diagrams

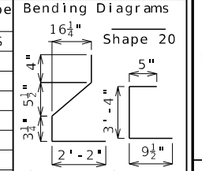

Welded Wire Reinforcement - Each Girder

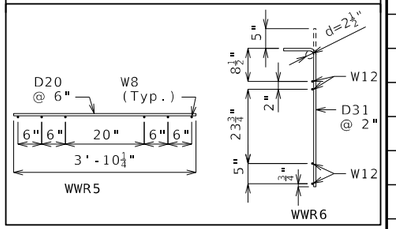

All dimensions are out to out.

Hooks and bends shall be in accordance with the CRSI Manual of Standard Practice for Detailing Reinforced Concrete Structures, Stirrup and Tie Dimensions.

Actual bar lengths are measured along centerline of bar to the nearest inch.

Minimum clearance to reinforcing shall be one inch.

All bar reinforcement shall be ASTM A706 Grade 60.

The two D1 bars may be furnished as one bar at the fabricator's option.

All B1 bars shall be epoxy coated. G4 and G5 not required for interior girders. Half no. of G3, G4 and G5 not required for ext. girders of end spans.

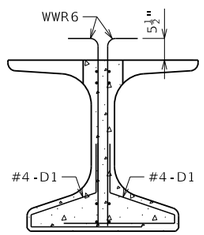

SECTION A-A

Strands not shown for clarity.

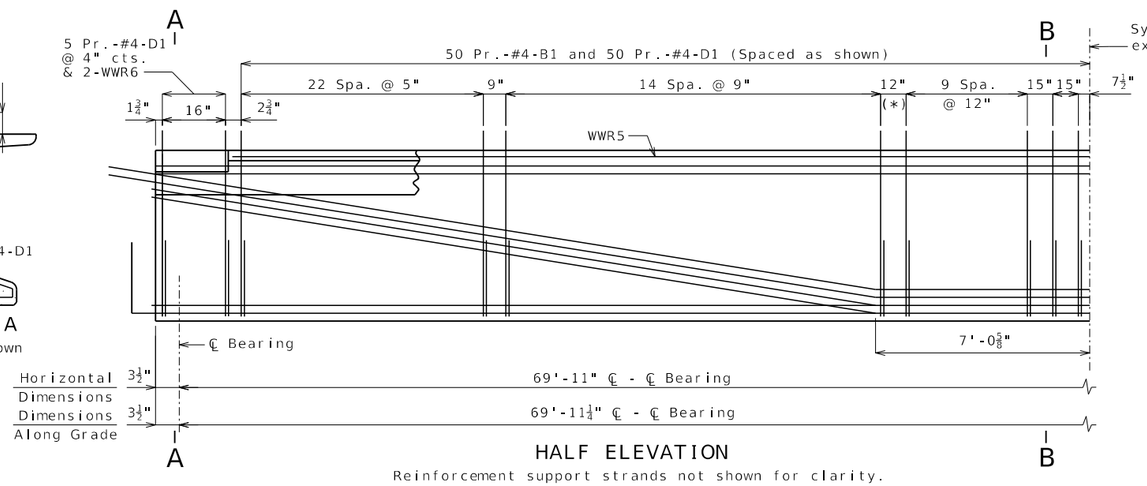

HALF ELEVATION

Reinforcement support strands not shown for clarity.

(*) Reinforcement spacing shown is based on horizontal girder dimensions. Adjust dimension as required for girder dimension along grade.

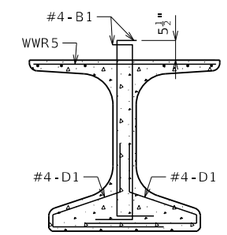

SECTION B-B

Strands not shown for clarity.

General Notes:

Concrete for prestressed girders shall be Class A-1 with f'c = 8000 psi and f'ci = 6500 psi.

Use 30 strands, 0.6"Ø Grade 270, with an initial prestress force of 1318 kips.

Pretensioned members shall be in accordance with Sec 1029.

Fabricator shall be responsible for location and design of lifting devices.

Exterior and interior girders are the same except: coil ties and top flange blockout.

The contractor shall provide bracing necessary for lateral and torsional stability of the girders during construction of the concrete slab and remove the bracing after the slab has attained 75% design strength. Contractor shall not drill holes in the girders.

For Girder Camber Diagram, see Sheet No. 25.

For location of coil ties at concrete diaphragms and integral bents, see Sheets No. 14, 15 & 22.

Alternate bar reinforcing steel details are provided and may be used. The same type of reinforcing steel shall be used for all girders in all spans.

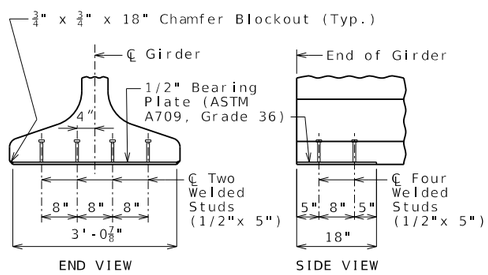

BEARING PLATE

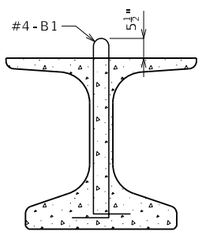

B1 BAR PERMISSIBLE ALTERNATE SHAPE

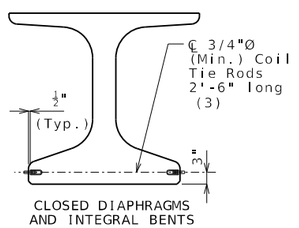

CLOSED DIAPHRAGMS AND INTEGRAL BENTS

COIL TIES

Exclude coil tie at exterior face of exterior girders except at integral end bents.

(3) 2'-3" at exterior face of exterior girders at end bents

NU-GIRDERS (ALTERNATE REINFORCEMENT) - SPAN (2-3)

Detailed September 2025
Checked September 2025

Note: This drawing is not to scale. Follow dimensions.

RYAN DAVID SHAW NUMBER PE-2011000388 PROFESSIONAL ENGINEER
THIS SHEET HAS BEEN SIGNED, SEALED AND DATED ELECTRONICALLY

DATE PREPARED 4/1/2026

ROUTE	STATE
I-270	MO
DISTRICT	SHEET NO.
BR	21

COUNTY ST. LOUIS

JOB NO. JSL0021

CONTRACT ID.

PROJECT NO.

BRIDGE NO. A9490

DESCRIPTION | DATE

MISSOURI HIGHWAYS AND TRANSPORTATION COMMISSION
105 WEST CAPITOL
JEFFERSON CITY, MO 65102
1-888-ASK-MODOT (1-888-275-6636)

HDR Engineering, Inc.
1001 Highlands Plaza Drive
Suite 200
St. Louis, MO 63110
314-425-8300
Certificate of Authority: 000856

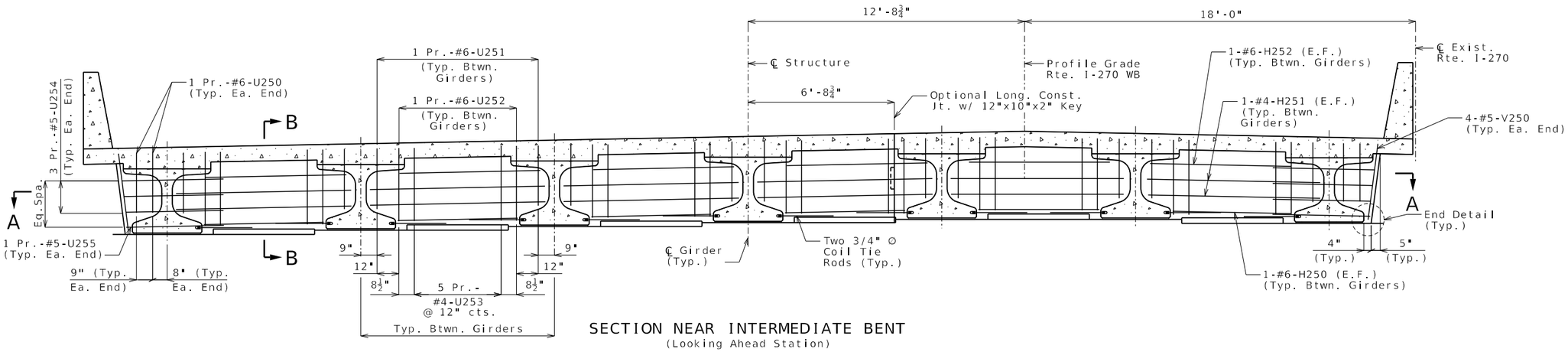

SECTION NEAR INTERMEDIATE BENT
(Looking Ahead Station)

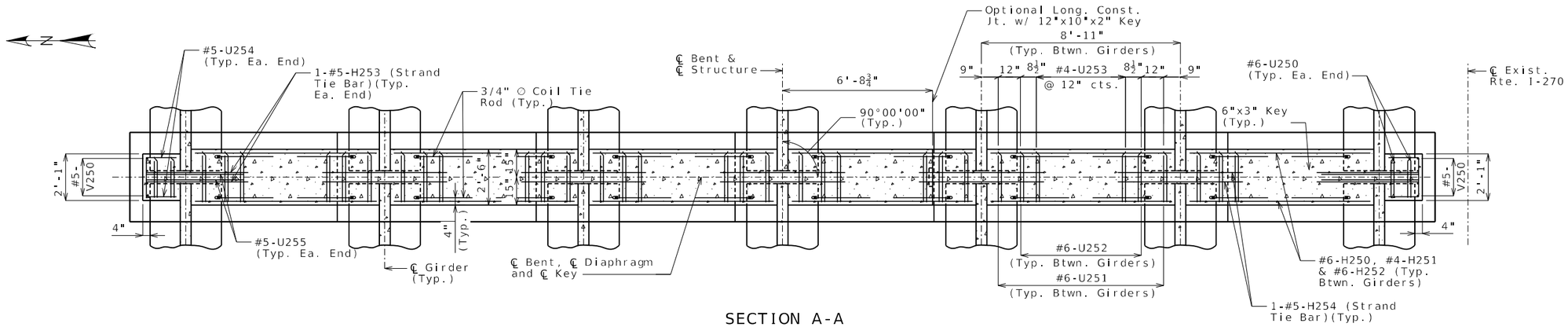

SECTION A-A

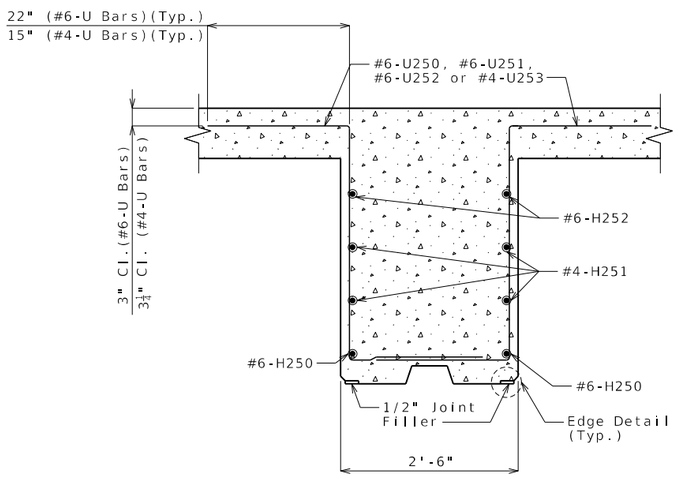

SECTION B-B

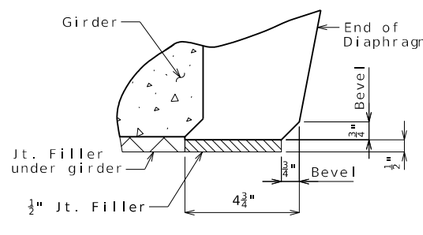

END DETAIL

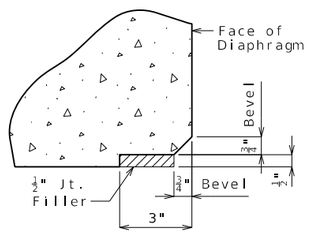

EDGE DETAIL

Notes:

Diaphragm at Intermediate Bent shall be built vertical.

The concrete diaphragm at the Intermediate Bent shall be poured a minimum of 30 minutes and a maximum of 2 hours before the slab is poured.

For location of strand tie bars and details of coil tie rods, see Sheets No. 18 thru 21.

DIAPHRAGM DETAILS AT INTERMEDIATE BENT NO. 2

Detailed September 2025
Checked September 2025

Note: This drawing is not to scale. Follow dimensions.

RYAN DAVID SHAW
NUMBER PE-2017000388
PROFESSIONAL ENGINEER
STATE OF MISSOURI
THIS SHEET HAS BEEN SIGNED, SEALED AND DATED ELECTRONICALLY

DATE PREPARED 4/1/2026
ROUTE I-270 | STATE MO
DISTRICT BR | SHEET NO. 22
COUNTY ST. LOUIS
JOB NO. JSL0021
CONTRACT ID.
PROJECT NO.
BRIDGE NO. A9490

DESCRIPTION | DATE

MISSOURI HIGHWAYS AND TRANSPORTATION COMMISSION
105 WEST CAPITOL
JEFFERSON CITY, MO 65102
1-888-ASK-MODOT (1-888-275-6636)

HDR Engineering, Inc.
1001 Highlands Plaza Drive
Suite 200
St. Louis, MO 63110
314-425-8300
Certificate of Authority: 000856

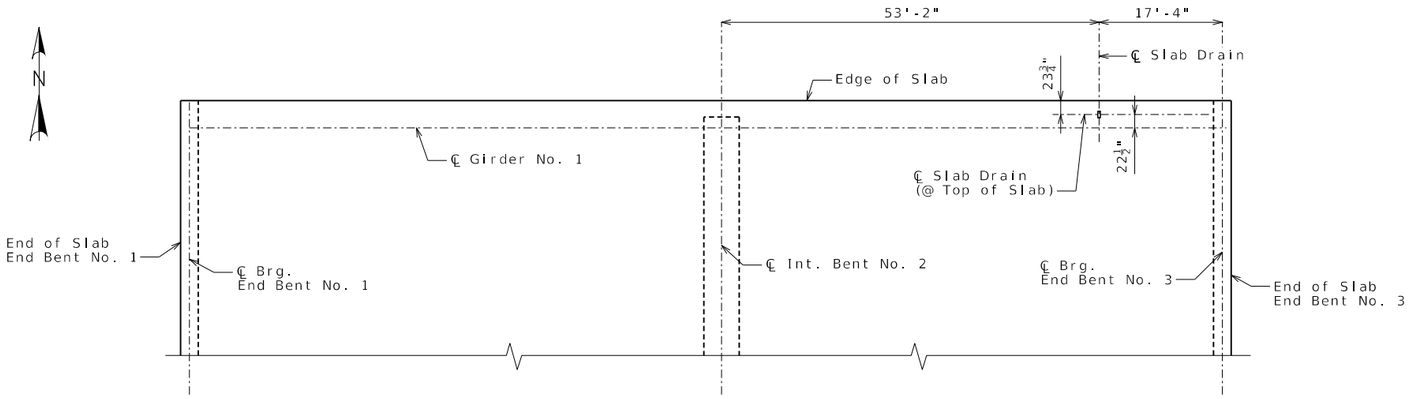

PART PLAN OF SLAB SHOWING SLAB DRAIN LOCATION

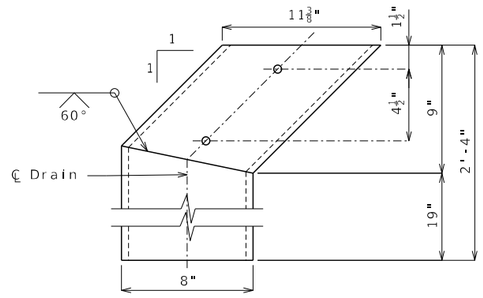

ELEVATION OF DRAIN

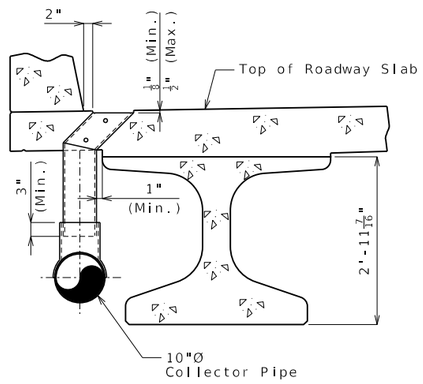

PART SECTION NEAR DRAIN

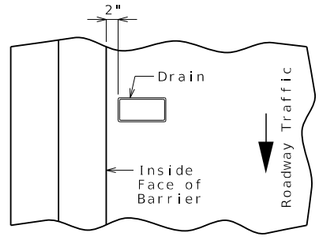

PART PLAN OF SLAB AT DRAIN

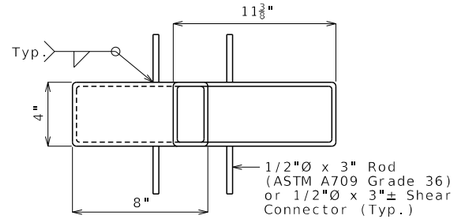

PLAN OF STEEL DRAIN OPTION

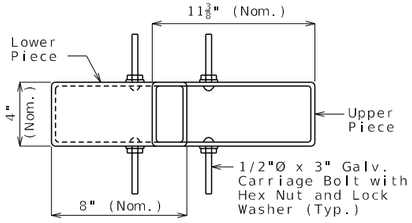

PLAN OF FRP DRAIN OPTION

General Notes:

Contractor shall have the option to construct either steel or FRP slab drains. All drains shall be of same type.

Locate drains in slab by dimensions shown in Part Section Near Drain.

Reinforcing steel shall be shifted to clear drains.

All 1/2"Ø bolts shall be ASTM A307.

Shop drawings will not be required for the slab drains and the bracket assembly.

For Drainage System (On Structure) details, see Sheet No. 24.

Notes for Steel Drain:

Slab drains may be fabricated of either 1/4" welded sheets of ASTM A709 Grade 36 steel or from 1/4" structural steel tubing ASTM A500 or A501.

Outside dimensions of drains are 8" x 4".

The drains shall be galvanized in accordance with ASTM A123.

Notes for FRP Drain:

Drains shall be machine filament-wound thermosetting resin tubing meeting the requirements of ASTM D2996 with the following exceptions:

Shape of drains shall be rectangular with outside nominal dimensions of 8" x 4".

Minimum reinforced wall thickness shall be 1/4 inch.

The resin used shall be ultraviolet (UV) resistant and/or have UV inhibitors mixed throughout. Drains may have an exterior coating for additional UV resistance.

The color of the slab drain shall be gray (Federal Standard 26373). The color shall be uniform throughout the resin and any coating used.

The combination of materials used in the manufacture of the drains shall be tested for UV resistance in accordance with ASTM D4329 Cycle A. The representative material shall withstand at least 500 hours of testing with only minor discoloration and without any physical deterioration. The contractor shall furnish the results of the required ultraviolet testing prior to acceptance of the slab drains.

At the contractor's option, drains may be field cut. The method of cutting FRP slab drain shall be as recommended by the manufacturer to ensure a smooth, chip free cut.

Both upper and lower drain pieces shall be rigidly connected to each other. Drain flow shall not be obstructed. Approval of the engineer is required.

STATE OF MISSOURI
RYAN DAVID SHAW
NUMBER PE-2017003268
PROFESSIONAL ENGINEER
THIS SHEET HAS BEEN SIGNED, SEALED AND DATED ELECTRONICALLY

DATE PREPARED 4/1/2026

ROUTE	STATE
I-270	MO
DISTRICT	SHEET NO.
BR	23

COUNTY: ST. LOUIS
JOB NO.: JSL0021
CONTRACT ID.:
PROJECT NO.:
BRIDGE NO.: A9490

DESCRIPTION | DATE

MISSOURI HIGHWAYS AND TRANSPORTATION COMMISSION
105 WEST CAPITOL
JEFFERSON CITY, MO 65102
1-888-ASK-MODOT (1-888-275-6636)

HDR Engineering, Inc.
1001 Highlands Plaza Drive
Suite 200
St. Louis, MO 63110
314-425-8300
Certificate of Authority: 000856

SLAB DRAINS

Detailed September 2025
Checked September 2025

Note: This drawing is not to scale. Follow dimensions.

c:\pwworking\central01\d4975495\B_A9490_023_SL0021.dgn 3:53:38 PM 4/1/2026

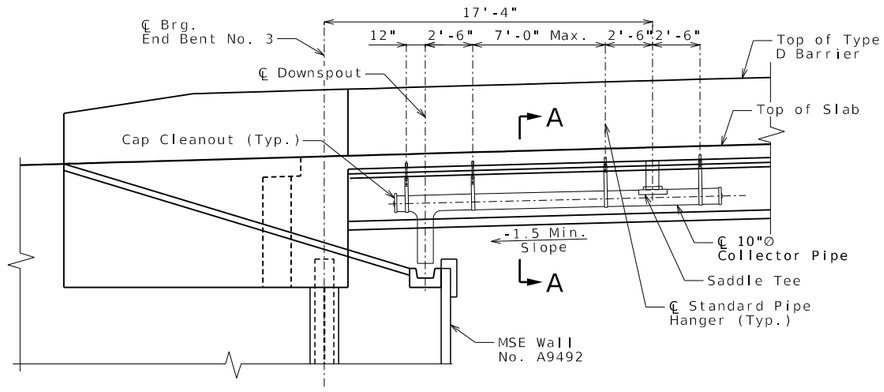

PART ELEVATION
(Looking Ahead Station of Route 367)

Notes:

All pipes, elbows, saddles, fittings, guards and all other drainage components shall be Reinforced Thermosetting Resin Pipe (RTRP), see Special Provisions.

Furnishing, fabricating and erecting drain pipes, fittings, saddles, guards, pipe supports, bolts and other miscellaneous items will be considered completely covered by the Contract Lump Sum Price for Drainage System (on Structure).

Piping shall be fabricated from field checked dimensions after installation of slab drains.

Provide cleanouts with a male threaded PVC plug where shown on the plans.

The color of the Reinforced Thermosetting Resin Pipe (RTRP) collection system shall be gray (Federal Standard 26373). The color shall be uniform throughout the resin and any coating used.

Coil inserts shall have a concrete pull-out strength (ultimate load) of at least 2,500 pounds in 4,000 psi concrete.

Pipe hanger assembly shall be ASTM A709 Gr.36 steel.

Standard Pipe Hangers shall be placed along ℄ 10" dia. Collector Pipe, spaced longitudinally as shown in Elevation.

Drain, saddle tee and collector pipe shall be rigidly connected to each other. Drain flow shall not be obstructed. Approval of the engineer is required.

All coil inserts, bolts, hardened washers, lock washers and nuts shall be galvanized in accordance with AASHTO M 232 (ASTM A153), Class C.

Construction of Drainage System (On Structure) to be coordinated with the construction and fabrication of MSE Wall No. A9492.

For Slab Drain Details, see Sheet No. 23.

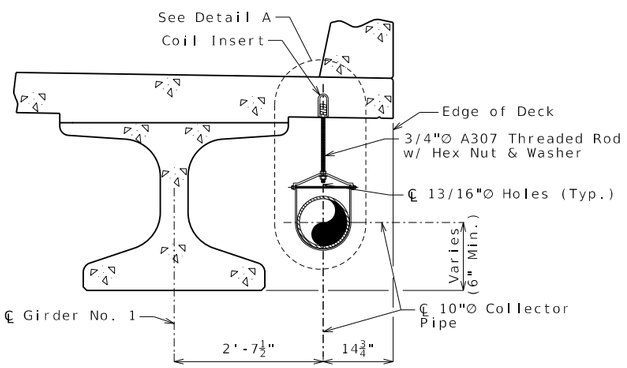

SECTION A-A

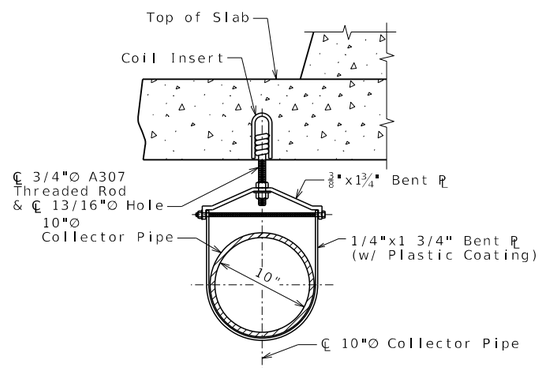

DETAIL A

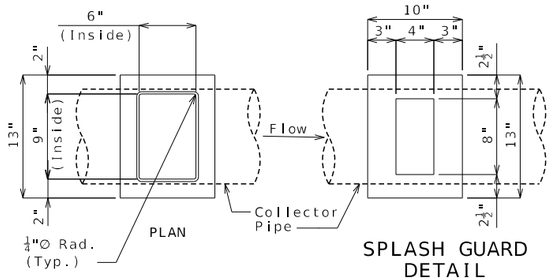

SPLASH GUARD
DETAIL

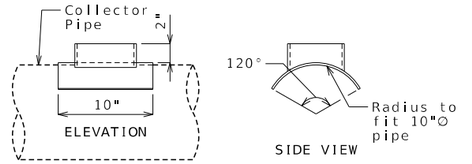

OUTLET SADDLE DETAILS

DRAINAGE SYSTEM (ON STRUCTURE)

Detailed September 2025
Checked September 2025

Note: This drawing is not to scale. Follow dimensions.

RYAN DAVID SHAW
NUMBER PE-2017002368
STATE OF MISSOURI
PROFESSIONAL ENGINEER
THIS SHEET HAS BEEN SIGNED, SEALED AND DATED ELECTRONICALLY

DATE PREPARED 4/1/2026
ROUTE I-270 | STATE MO
DISTRICT BR | SHEET NO. 24
COUNTY ST. LOUIS
JOB NO. JSL0021
CONTRACT ID.
PROJECT NO.
BRIDGE NO. A9490

DESCRIPTION | DATE

MISSOURI HIGHWAYS AND TRANSPORTATION COMMISSION
105 WEST CAPITOL
JEFFERSON CITY, MO 65102
1-888-ASK-MODOT (1-888-275-6636)

HDR Engineering, Inc.
1001 Highlands Plaza Drive
Suite 200
St. Louis, MO 63110
314-425-8300
Certificate of Authority: 000856

c:\pwworking\central01\d4975495\B_A9490_024_SL0021.dgn 3:53:47 PM 4/1/2026

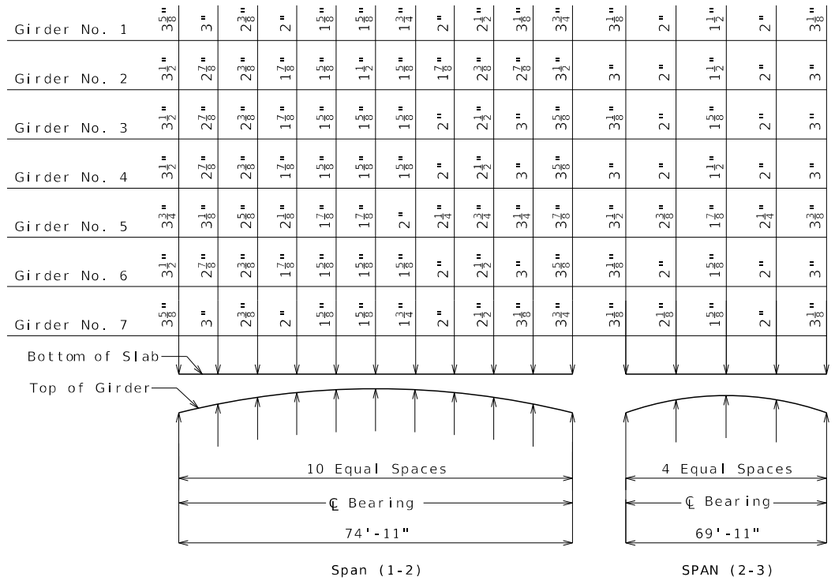

THEORETICAL SLAB HAUNCHING DIAGRAM

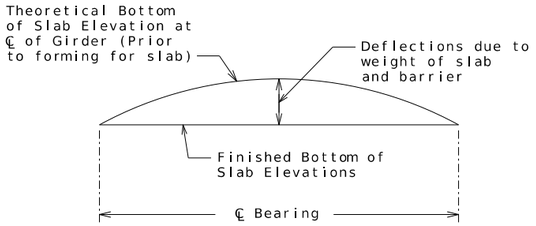

TYPICAL SLAB ELEVATIONS DIAGRAM

Theoretical Bottom of Slab Elevations at Centerline of Girder (Prior to forming for slab) (Estimated at 90 days)

Girder Number	Span (1-2) (74'-11" ℄ Brg. - ℄ Brg.)										
	℄ Brg.	.10	.20	.30	.40	.50	.60	.70	.80	.90	℄ Brg.
1	575.77	575.66	575.54	575.41	575.27	575.12	574.95	574.77	574.58	574.38	574.17
2	575.94	575.84	575.72	575.59	575.45	575.30	575.13	574.95	574.76	574.56	574.35
3	576.12	576.01	575.90	575.77	575.63	575.48	575.31	575.13	574.94	574.74	574.52
4	576.30	576.19	576.08	575.95	575.81	575.66	575.49	575.31	575.12	574.91	574.70
5	576.48	576.37	576.25	576.13	575.99	575.84	575.67	575.49	575.30	575.09	574.88
6	576.45	576.35	576.23	576.10	575.96	575.81	575.64	575.46	575.27	575.07	574.86
7	576.28	576.17	576.05	575.92	575.78	575.63	575.46	575.28	575.09	574.89	574.68

Girder Number	Span (2-3) (69'-11" ℄ Brg. - ℄ Brg.)				
	℄ Brg.	.25	.50	.75	℄ Brg.
1	574.14	573.77	573.35	572.86	572.32
2	574.32	573.95	573.53	573.04	572.50
3	574.50	574.13	573.71	573.22	572.68
4	574.67	574.31	573.89	573.40	572.86
5	574.85	574.49	574.07	573.58	573.04
6	574.83	574.46	574.04	573.55	573.01
7	574.65	574.28	573.86	573.37	572.83

Elevations are based on a constant slab thickness of 8 1/2" and include allowance for theoretical dead load deflections due to weight of slab and Type D barriers.

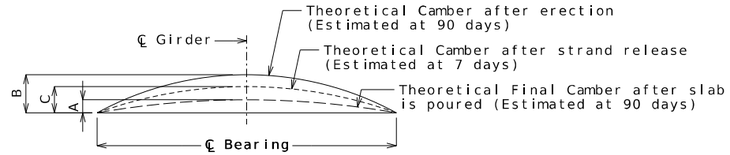

Girder	Span (1-2)			Span (2-3)		
	A	B	C	A	B	C
Ext. Girder	$2\frac{1}{4}$"	$3\frac{1}{2}$"	$2\frac{3}{8}$"	$1\frac{7}{8}$"	$2\frac{3}{4}$"	$1\frac{7}{8}$"
Int. Girder	$2\frac{1}{4}$"			$1\frac{3}{4}$"		

GIRDER CAMBER DIAGRAM

Conversion Factors for Girder Camber (Estimated at 90 days):

0.25 pt. = 0.7125 x 0.5 pt. - Span (2-3)

0.1 pt. = 0.314 x 0.5 pt.
0.2 pt. = 0.593 x 0.5 pt.
0.3 pt. = 0.813 x 0.5 pt.
0.4 pt. = 0.952 x 0.5 pt.
] - Span (1-2)

Notes:

If girder camber is different from that shown in the camber diagram, in order to maintain minimum slab thickness, an adjustment of the slab haunches, an increase in slab thickness or a raise in grade uniformly throughout the structure shall be necessary. The haunch shall be limited to ensure the projecting girder reinforcement is embedded into slab at least 2 inches. No payment will be made for additional labor or materials required for variation in haunching, slab thickness or grade adjustment.

Concrete in the slab haunches is included in the Estimated Quantities for Slab on Concrete NU-Girder.

CAMBER, SLAB ELEVATIONS AND HAUNCHING

Detailed September 2025
Checked September 2025

Note: This drawing is not to scale. Follow dimensions.

RYAN DAVID SHAW
NUMBER PE-2017002368
PROFESSIONAL ENGINEER
STATE OF MISSOURI
THIS SHEET HAS BEEN SIGNED, SEALED AND DATED ELECTRONICALLY

DATE PREPARED 4/1/2026
ROUTE I-270 | STATE MO
DISTRICT BR | SHEET NO. 25
COUNTY ST. LOUIS
JOB NO. JSL0021
CONTRACT ID.
PROJECT NO.
BRIDGE NO. A9490

DESCRIPTION | DATE

MISSOURI HIGHWAYS AND TRANSPORTATION COMMISSION
105 WEST CAPITOL
JEFFERSON CITY, MO 65102
1-888-ASK-MODOT (1-888-275-6636)

HDR Engineering, Inc.
1001 Highlands Plaza Drive
Suite 200
St. Louis, MO 63110
314-425-8300
Certificate of Authority: 000856

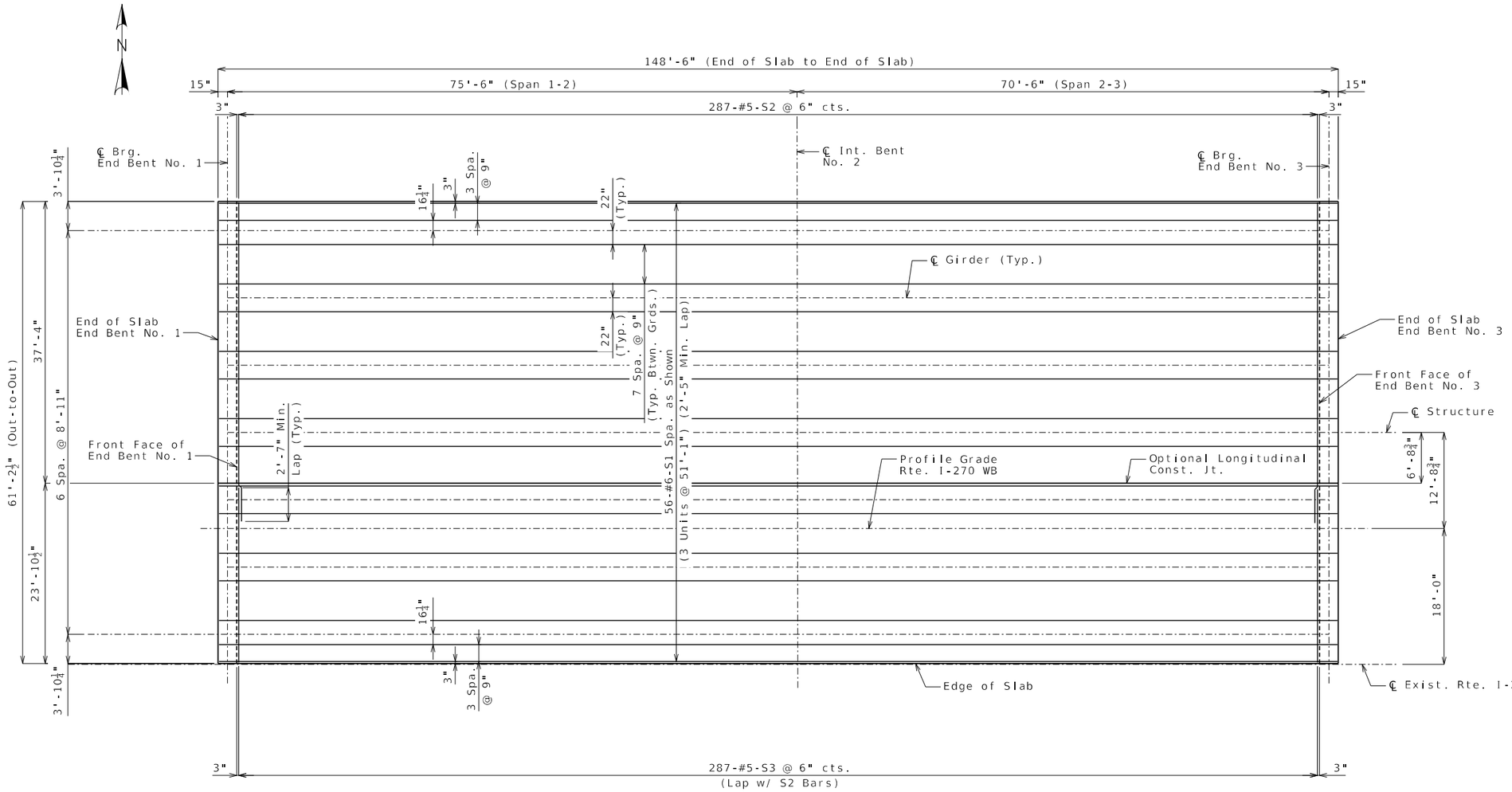

Notes:

Longitudinal slab dimensions are measured horizontally.

For Typical Slab Section and Slab Pouring Sequence, see Sheet No. 28.

For details and reinforcement of Type D Barrier not shown, see Sheets No. 29 & 30.

For Theoretical Slab Haunching Diagram and Theoretical Bottom of Slab Elevations, see Sheet No. 25.

For Staging Plans, see Sheets No. 4 thru 6.

For location of coil inserts for pipe hangers, see Sheet No. 24.

PLAN OF SLAB REINFORCEMENT - BOTTOM

Detailed September 2025
Checked September 2025

Note: This drawing is not to scale. Follow dimensions.

RYAN DAVID SHAW
NUMBER PE-2017002368
PROFESSIONAL ENGINEER
STATE OF MISSOURI
THIS SHEET HAS BEEN SIGNED, SEALED AND DATED ELECTRONICALLY

DATE PREPARED
4/1/2026

ROUTE	STATE
I-270	MO
DISTRICT	SHEET NO.
BR	26

COUNTY
ST. LOUIS

JOB NO.
JSL0021

CONTRACT ID.

PROJECT NO.

BRIDGE NO.
A9490

DESCRIPTION | DATE

MISSOURI HIGHWAYS AND TRANSPORTATION COMMISSION
105 WEST CAPITOL
JEFFERSON CITY, MO 65102
1-888-ASK-MODOT (1-888-275-6636)

HDR Engineering, Inc.
1001 Highlands Plaza Drive
Suite 200
St. Louis, MO 63110
314-425-8300
Certificate of Authority: 000856

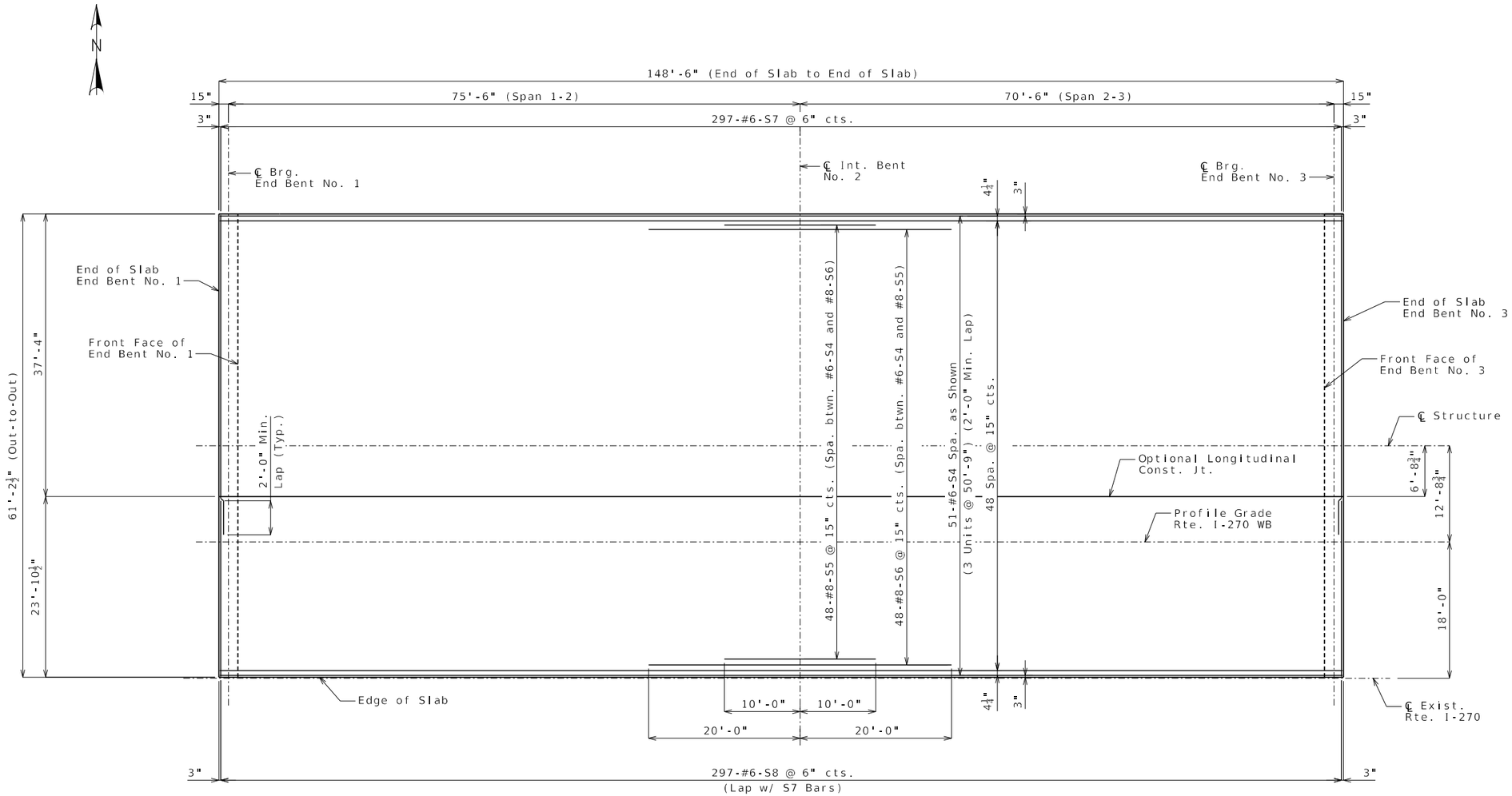

Notes:

Longitudinal slab dimensions are measured horizontally.

For Typical Slab Section and Slab Pouring Sequence, see Sheet No. 28.

For details and reinforcement of Type D Barrier not shown, see Sheets No. 29 & 30.

For Theoretical Slab Haunching Diagram and Theoretical Bottom of Slab Elevations, see Sheet No. 25.

For Staging Plans, see Sheets No. 4 thru 6.

For location of coil inserts for pipe hangers, see Sheet No. 24.

PLAN OF SLAB REINFORCEMENT - TOP

Detailed September 2025
Checked September 2025

Note: This drawing is not to scale. Follow dimensions.

RYAN DAVID SHAW
NUMBER PE-2017003868
STATE OF MISSOURI
PROFESSIONAL ENGINEER
THIS SHEET HAS BEEN SIGNED, SEALED AND DATED ELECTRONICALLY

DATE PREPARED
4/1/2026

ROUTE	STATE
I-270	MO
DISTRICT	SHEET NO.
BR	27

COUNTY
ST. LOUIS

JOB NO.
JSL0021

CONTRACT ID.

PROJECT NO.

BRIDGE NO.
A9490

DESCRIPTION	DATE

MISSOURI HIGHWAYS AND TRANSPORTATION COMMISSION
105 WEST CAPITOL
JEFFERSON CITY, MO 65102
1-888-ASK-MODOT (1-888-275-6636)

HDR Engineering, Inc.
1001 Highlands Plaza Drive
Suite 200
St. Louis, MO 63110
314-425-8300
Certificate of Authority: 000856

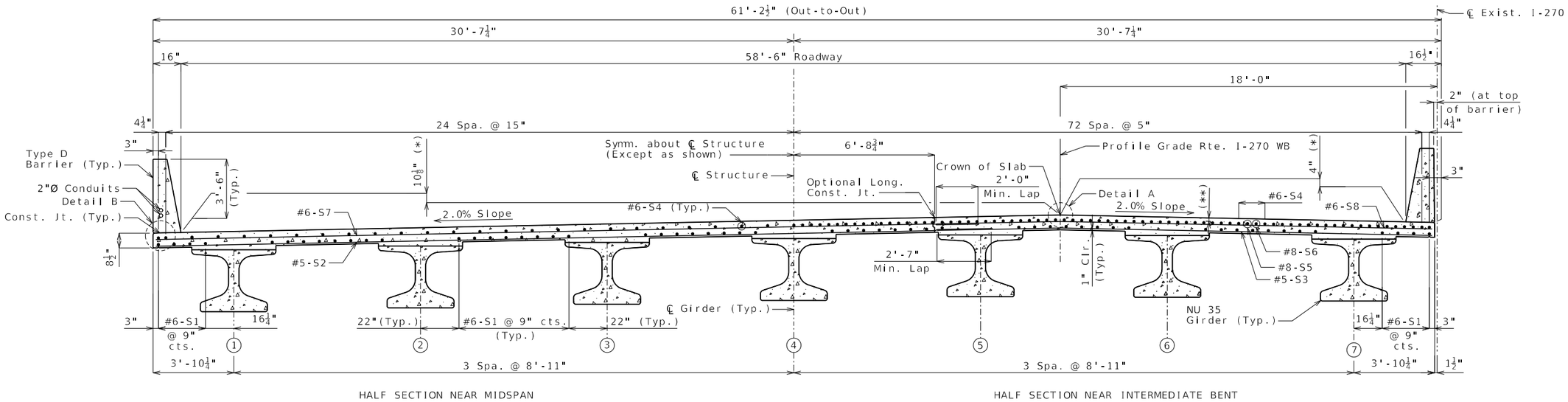

HALF SECTION NEAR MIDSPAN

HALF SECTION NEAR INTERMEDIATE BENT

SECTION THRU SLAB

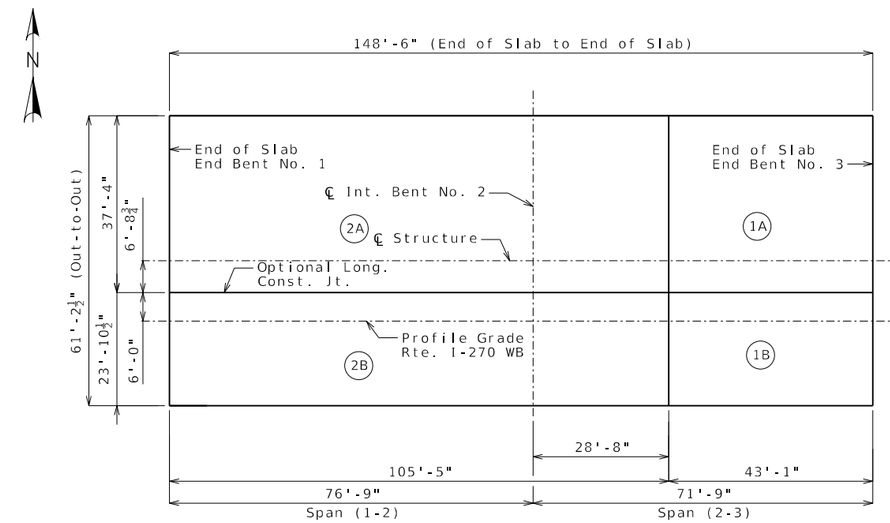

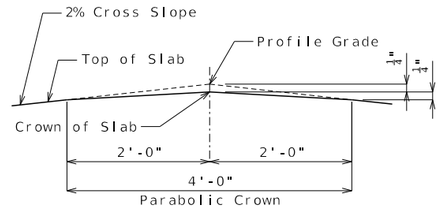

DETAIL A

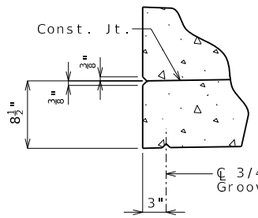

DETAIL B

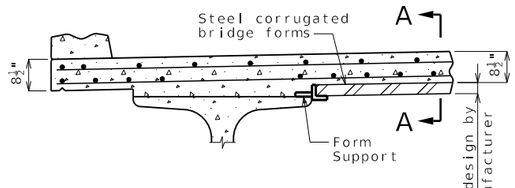

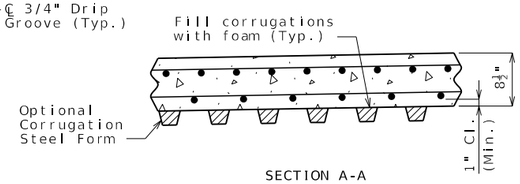

SECTION A-A

OPTIONAL STAY-IN-PLACE FORM DETAILS

Per design by manufacturer

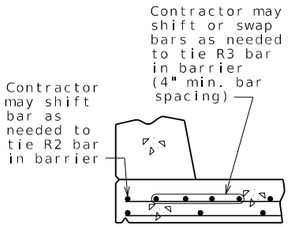

OPTIONAL SHIFTING TOP BARS AT BARRIER

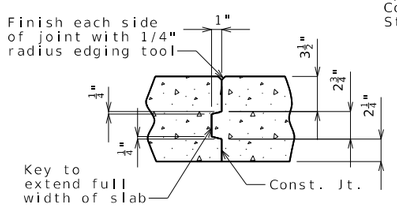

SLAB CONSTRUCTION JOINT

If the optional longitudinal construction joint is omitted the contractor shall submit a slab pour sequence for approval by the engineer.

The contractor shall furnish an approved retarder to retard the set of the concrete to 2.5 hours and shall pour and satisfactorily finish the slab pours at the rate given.

The concrete diaphragm at the intermediate bent and integral end bents shall be poured a minimum of 30 minutes and a maximum of 2 hours before the slab is poured.

The longitudinal construction joint may be omitted with the approval of the engineer. When the longitudinal construction joint is omitted, the minimum rate of pour for alternate pouring sequences shall be increased by a factor of 1.64.

	Sequence of Pours		Min. Rate of Pour Cu. Yds./Hr.
	Direction		With Retarder
Basic Sequence	1 End to 2	2 1 to End	25
Alternate pours to the basic sequence are subject to the approval of the engineer in accordance with Sec 703.			
Alternate A Pours	1 + 2 End to End		44

SLAB POURING SEQUENCE

(*) To Profile Grade Elevation

(**) 2 3/4" Cl. to #8-S5 & S6 bars. 3 1/8" Cl. to #6-S4 bars.

Notes:

For Plan of Slab Reinforcement, see Sheets No. 26 & 27.

For details and reinforcement of Type D Barrier not shown, see Sheets No. 29 & 30.

For Theoretical Slab Haunching Diagram, Girder Camber Diagram and Theoretical Bottom of Slab Elevations, see Sheet No. 25.

For conduit and junction box details, see Sheet No. 33.

For staging plans, see Sheets No. 4 thru 6.

For location of coil inserts for pipe hangers, see Sheet No. 24.

TYPICAL SLAB SECTION AND DETAILS

Detailed September 2025
Checked September 2025

Note: This drawing is not to scale. Follow dimensions.

STATE OF MISSOURI
RYAN DAVID SHAW
NUMBER PE-2017002368
PROFESSIONAL ENGINEER
THIS SHEET HAS BEEN SIGNED, SEALED AND DATED ELECTRONICALLY

DATE PREPARED 4/1/2026

ROUTE	STATE
I-270	MO
DISTRICT	SHEET NO.
BR	28

COUNTY ST. LOUIS

JOB NO. JSL0021

CONTRACT ID.

PROJECT NO.

BRIDGE NO. A9490

DESCRIPTION | DATE

MISSOURI HIGHWAYS AND TRANSPORTATION COMMISSION
105 WEST CAPITOL
JEFFERSON CITY, MO 65102
1-888-ASK-MODOT (1-888-275-6636)

HDR Engineering, Inc.
1001 Highlands Plaza Drive
Suite 200
St. Louis, MO 63110
314-425-8300
Certificate of Authority: 000856

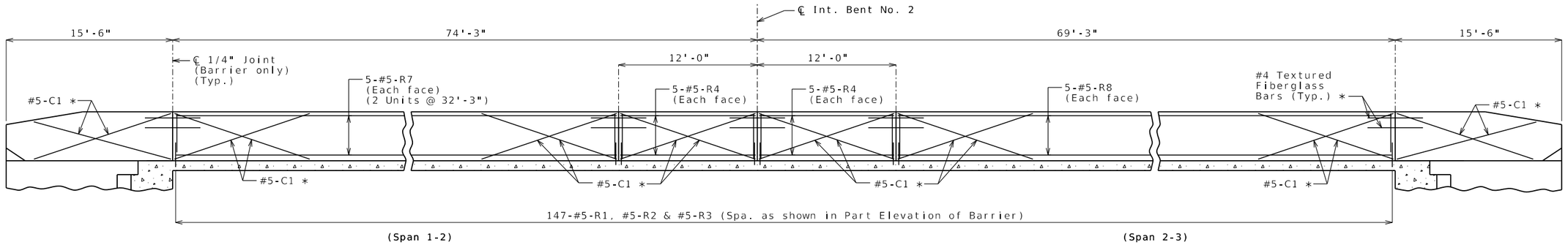

ELEVATION OF LEFT BARRIER

Longitudinal dimensions are horizontal.

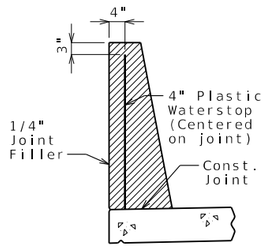

WATERSTOP DETAIL

Plastic waterstop shall be placed in all formed joints, except structures with superelevation, use on lower joints only.

Cost of plastic waterstop, complete in place, will be considered completely covered by the contract unit price for Type D Barrier.

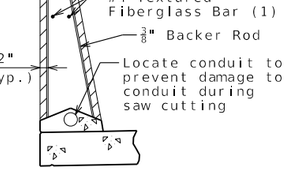

SECTION THRU SAW CUT JOINT

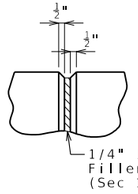

PART ELEVATION AT FORMED JOINT

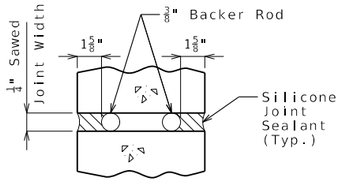

SECTION B-B

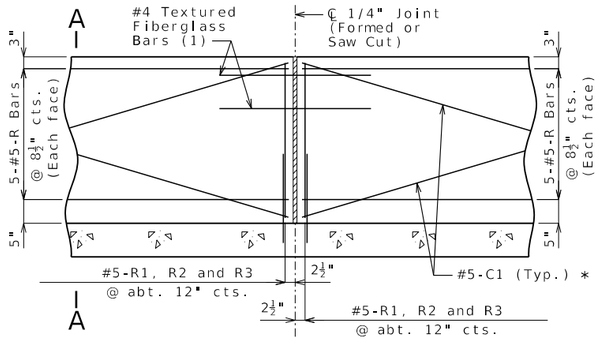

PART ELEVATION OF BARRIER

(1) Four feet long, centered on joint, slip-formed option only

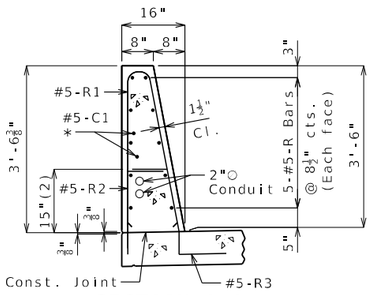

SECTION A-A

Use a minimum lap of 2'-6" for #5 horizontal barrier bars.

The cross-sectional area above the slab is 3.52 square feet.

(2) To top of bar

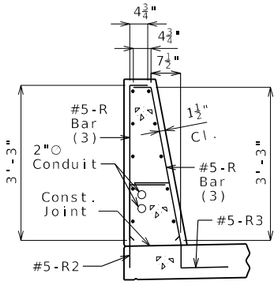

R-BAR PERMISSIBLE ALTERNATE SHAPE

(3) The R1 bar may be separated into two bars as shown, at the contractor's option, only when slip forming is not used. (All dimensions are out to out.)

General Notes:

* Slip-formed option only.

Conventional forming or slip forming may be used. Saw cut joints may be used with conventional forming.

Top of barrier shall be built parallel to grade and barrier joints (except at end bents) normal to grade.

All exposed edges of barrier shall have either a 1/2-inch radius or a 3/8-inch bevel, unless otherwise noted.

Payment for all concrete and reinforcement, complete in place, will be considered completely covered by the contract unit price for Type D Barrier per linear foot.

Concrete in barrier shall be Class B-1.

Measurement of barrier is to the nearest linear foot for each structure, measured along the outside top of slab from end of wing to end of wing.

Concrete traffic barrier delineators shall be placed on top of the barrier as shown on Missouri Standard Plan 617.10 and in accordance with Sec 617. Delineators on bridges with two-lane, two-way traffic shall have retroreflective sheeting on both sides. Concrete traffic barrier delineators will be considered completely covered by the contract unit price for Type D Barrier.

Joint sealant and backer rods shall be in accordance with Sec 717 for silicone joint sealant for saw cut and formed joints.

For slip-formed option, both sides of barrier shall have a vertically broomed finish and the top shall have a transversely broomed finish.

Plastic waterstop shall not be used with saw cut joints.

For conduit details, see Sheet No. 33.

TYPE D BARRIER (LEFT)

Detailed September 2025
Checked September 2025

Note: This drawing is not to scale. Follow dimensions.

RYAN DAVID SHAW
NUMBER PE-2017003868
STATE OF MISSOURI
PROFESSIONAL ENGINEER
THIS SHEET HAS BEEN SIGNED, SEALED AND DATED ELECTRONICALLY

DATE PREPARED 4/1/2026
ROUTE I-270 | STATE MO
DISTRICT BR | SHEET NO. 29
COUNTY ST. LOUIS
JOB NO. JSL0021
CONTRACT ID.
PROJECT NO.
BRIDGE NO. A9490

DESCRIPTION | DATE

MISSOURI HIGHWAYS AND TRANSPORTATION COMMISSION
105 WEST CAPITOL
JEFFERSON CITY, MO 65102
1-888-ASK-MODOT (1-888-275-6636)

HDR Engineering, Inc.
1001 Highlands Plaza Drive
Suite 200
St. Louis, MO 63110
314-425-8300
Certificate of Authority: 000856

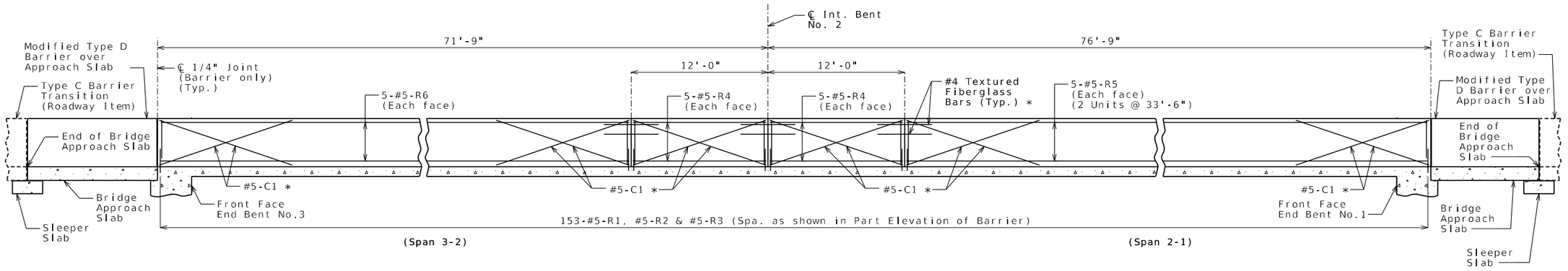

ELEVATION OF RIGHT BARRIER

Longitudinal dimensions are horizontal.

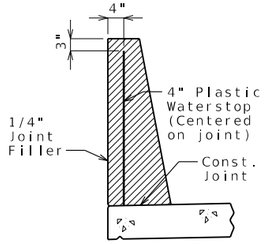

WATERSTOP DETAIL

Plastic waterstop shall be placed in all formed joints, except structures with superelevation, use on lower joints only.

Cost of plastic waterstop, complete in place, will be considered completely covered by the contract unit price for Type D Barrier.

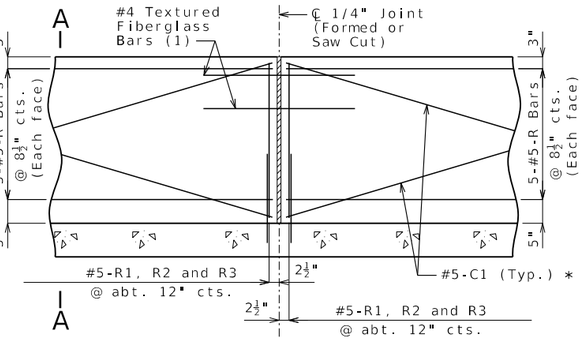

PART ELEVATION OF BARRIER

(1) Four feet long, centered on joint, slip-formed option only

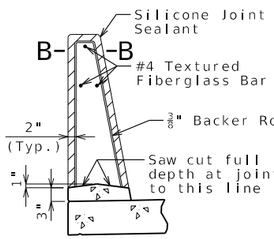

SECTION THRU SAW CUT JOINT

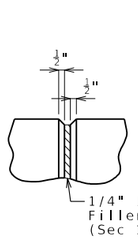

PART ELEVATION AT FORMED JOINT

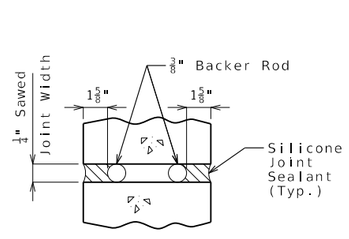

SECTION B-B

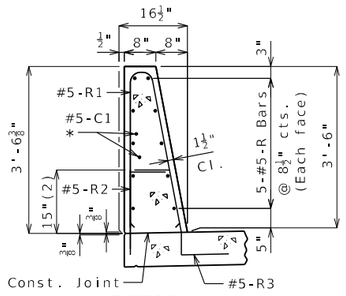

SECTION A-A

Use a minimum lap of 2'-6" for #5 horizontal barrier bars.

The cross-sectional area above the slab is 3.60 square feet.

(2) To top of bar

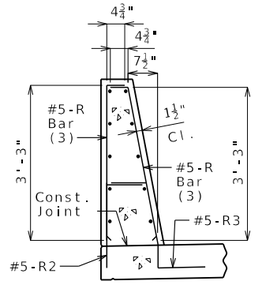

R-BAR PERMISSIBLE ALTERNATE SHAPE

(3) The R1 bar may be separated into two bars as shown, at the contractor's option, only when slip forming is not used. (All dimensions are out to out.)

General Notes:

* Slip-formed option only.

Conventional forming or slip forming may be used. Saw cut joints may be used with conventional forming.

Top of barrier shall be built parallel to grade and barrier joints normal to grade.

All exposed edges of barrier shall have either a 1/2-inch radius or a 3/8-inch bevel, unless otherwise noted.

Payment for all concrete and reinforcement, complete in place, will be considered completely covered by the contract unit price for Type D Barrier per linear foot.

Concrete in barrier shall be Class B-1.

Measurement of barrier is to the nearest linear foot for each structure, measured along the outside top of slab from end of slab to end of slab.

Concrete traffic barrier delineators shall be placed on top of the barrier as shown on Missouri Standard Plan 617.10 and in accordance with Sec 617. Delineators on bridges with two-lane, two-way traffic shall have retroreflective sheeting on both sides. Concrete traffic barrier delineators will be considered completely covered by the contract unit price for Type D Barrier.

Joint sealant and backer rods shall be in accordance with Sec 717 for silicone joint sealant for saw cut and formed joints.

For slip-formed option, both sides of barrier shall have a vertically broomed finish and the top shall have a transversely broomed finish.

Plastic waterstop shall not be used with saw cut joints.

For Modified Type D Barrier details, see Sheet No. 32.

TYPE D BARRIER (RIGHT)

Detailed September 2025
Checked September 2025

Note: This drawing is not to scale. Follow dimensions.

RYAN DAVID SHAW
NUMBER PE-2017002868
PROFESSIONAL ENGINEER
STATE OF MISSOURI
THIS SHEET HAS BEEN SIGNED, SEALED AND DATED ELECTRONICALLY

DATE PREPARED 4/1/2026

ROUTE	STATE
I-270	MO

DISTRICT	SHEET NO.
BR	30

COUNTY: ST. LOUIS
JOB NO.: JSL0021
CONTRACT ID.:
PROJECT NO.:
BRIDGE NO.: A9490

DESCRIPTION	DATE

MISSOURI HIGHWAYS AND TRANSPORTATION COMMISSION
105 WEST CAPITOL
JEFFERSON CITY, MO 65102
1-888-ASK-MODOT (1-888-275-6636)
HDR Engineering, Inc.
1001 Highlands Plaza Drive
Suite 200
St. Louis, MO 63110
314-425-8300
Certificate of Authority: 000856

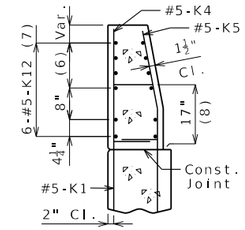

SECTION A-A

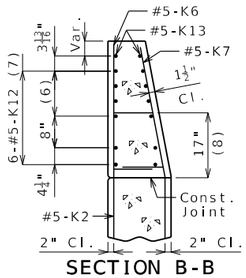

SECTION B-B

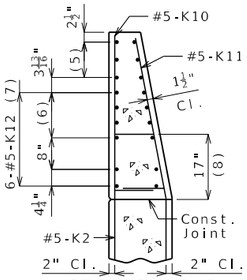

SECTION C-C

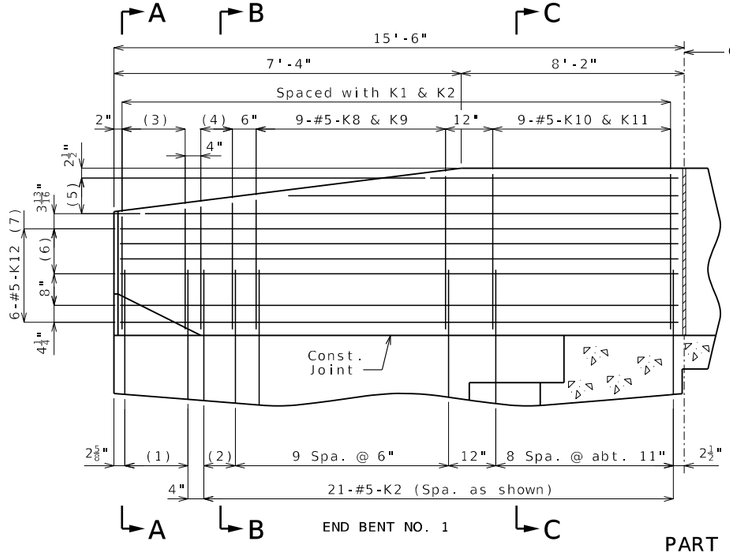

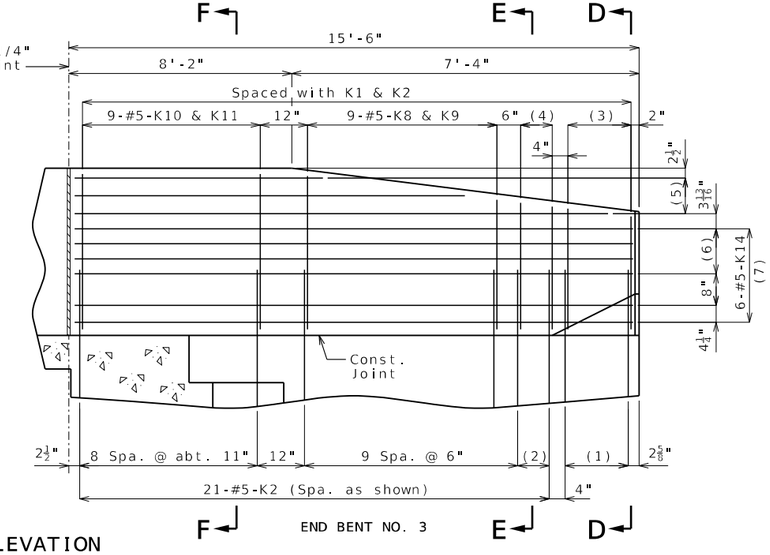

PART ELEVATION

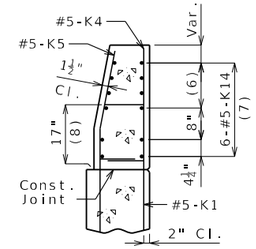

SECTION D-D

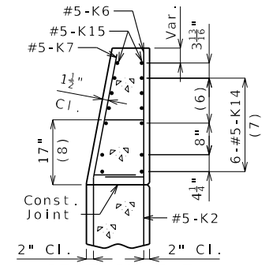

SECTION E-E

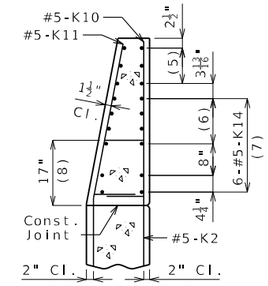

SECTION F-F

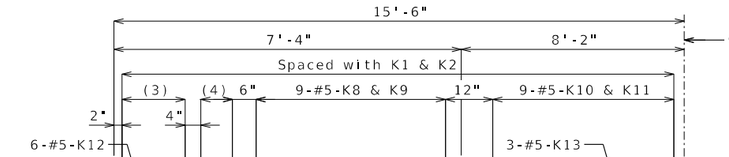

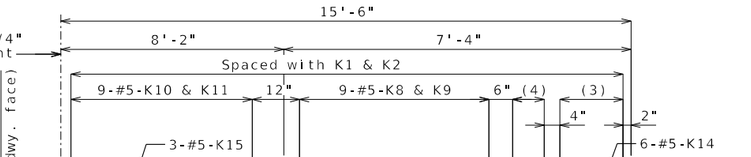

PART PLAN

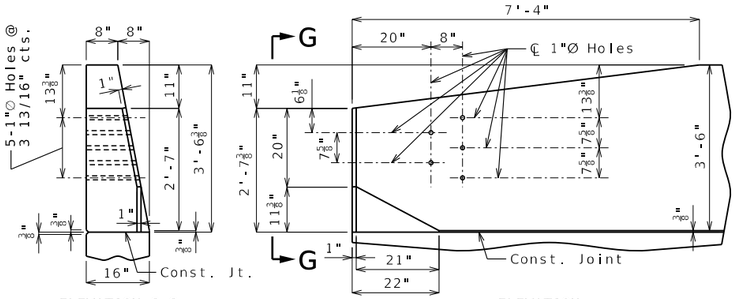

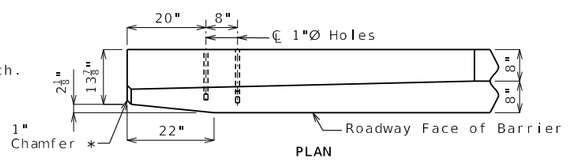

* Transition to zero at Type A curb for gutter lines to match.

DETAILS OF GUARD RAIL ATTACHMENT

(1) 5-#5-K1 @ 4" cts.

(2) 2 spaces @ 4"

(3) 5-#5-K4 & K5

(4) 3-#5-K6 & K7

(5) 3-#5-K13 or K15 @ 4½" cts., each face

(6) 3 spaces @ 3 13/16"

(7) Spaced as shown, each face

(8) To top of bar

General Notes:

Concrete traffic barrier delineators shall be placed on top of the barrier as shown on Missouri Standard Plan 617.10 and in accordance with Sec 617. Delineators on bridges with two-lane, two-way traffic shall have retroreflective sheeting on both sides. Concrete traffic barrier delineators will be considered completely covered by the contract unit price for Type D Barrier.

Reinforcing Steel:
Minimum clearance to reinforcing steel shall be 1 1/2" except as shown for bars embedded into end bent.

TYPE D BARRIER AT END BENTS (LEFT)

(Left Barrier Only)

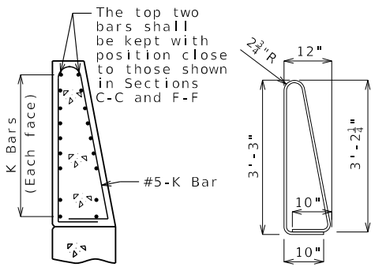

K10-K11 BAR PERMISSIBLE ALTERNATE SHAPE

(Other K bars not shown for clarity)

The K10-K11 bar combination may be furnished as one bar as shown, at the contractor's option.

Notes:

All dimensions are out to out.

For conduit and junction box details, see Sheet No. 33.

Detailed September 2025
Checked September 2025

Note: This drawing is not to scale. Follow dimensions.

RYAN DAVID SHAW
NUMBER PE-2011000388
PROFESSIONAL ENGINEER
STATE OF MISSOURI
THIS SHEET HAS BEEN SIGNED, SEALED AND DATED ELECTRONICALLY

DATE PREPARED 4/1/2026
ROUTE I-270 | STATE MO
DISTRICT BR | SHEET NO. 31
COUNTY ST. LOUIS
JOB NO. JSL0021
CONTRACT ID.
PROJECT NO.
BRIDGE NO. A9490

DESCRIPTION | DATE

MISSOURI HIGHWAYS AND TRANSPORTATION COMMISSION
105 WEST CAPITOL
JEFFERSON CITY, MO 65102
1-888-ASK-MODOT (1-888-275-6636)

HDR Engineering, Inc.
1001 Highlands Plaza Drive
Suite 200
St. Louis, MO 63110
314-425-8300
Certificate of Authority: 000856

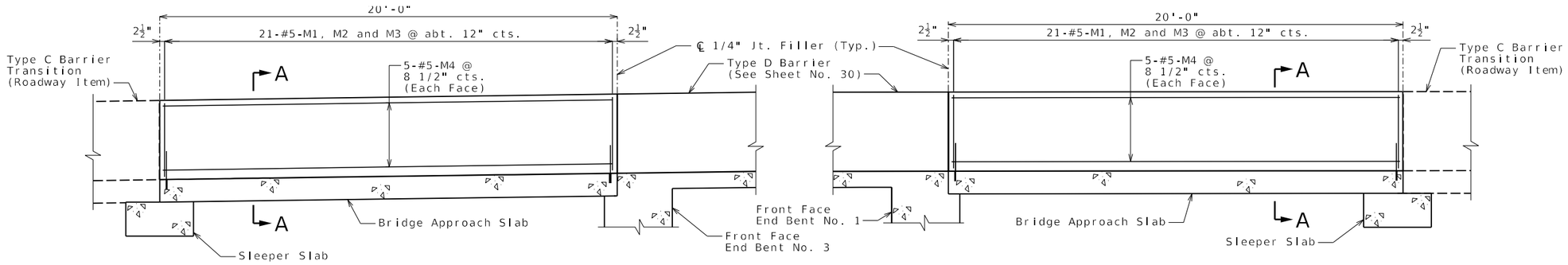

PART ELEVATION OF BARRIER ON APPROACH SLABS

Longitudinal dimensions are horizontal.

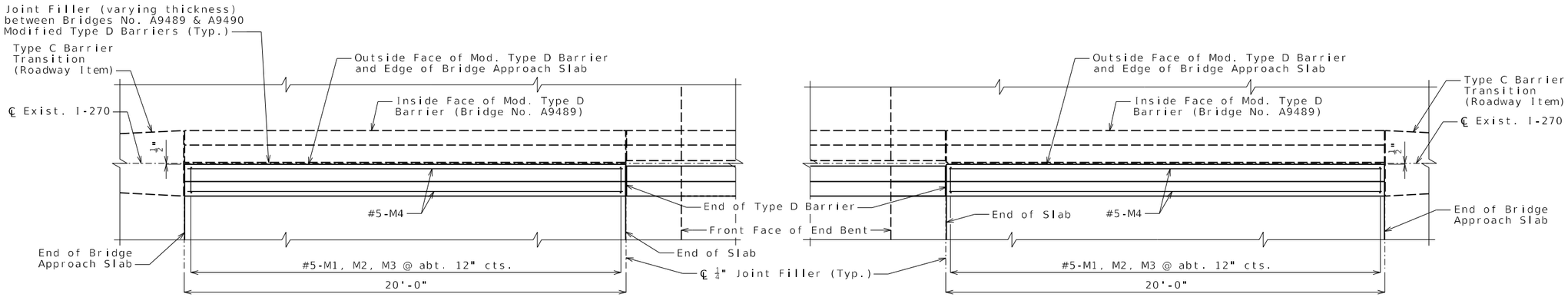

PART PLAN OF BARRIER ON APPROACH SLABS

Longitudinal dimensions are horizontal.

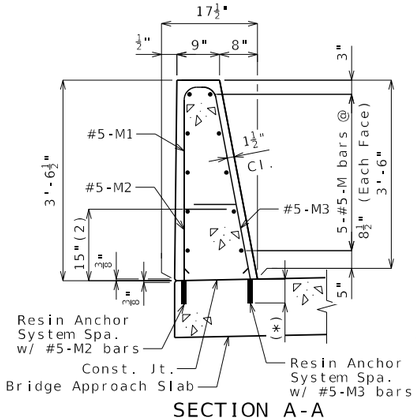

SECTION A-A

The cross-sectional area above the approach slab is 3.89 square feet.

(2) To top bar.

(*) Manufacturer's embedment length (5" minimum)

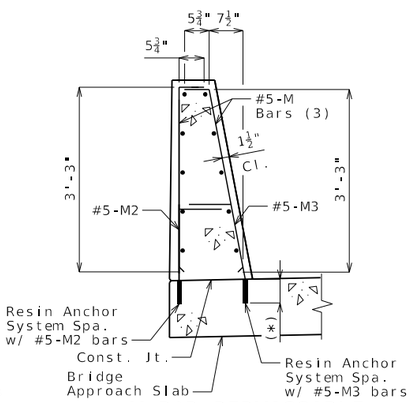

M-BAR PERMISSIBLE ALTERNATE SHAPE

(3) The M1 bar may be separated into two bars as shown, at the contractor's option. (All dimensions are out to out.)

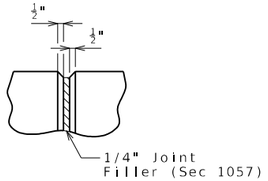

PART ELEVATION AT FORMED JOINT

Notes:

Conventional forming shall be used.

Top of Modified Type D Barrier shall be built parallel to grade with barrier curb joints.

All exposed edges of barrier shall have either a 1/2-inch radius or a 3/8-inch bevel, unless otherwise noted.

Payment for all concrete and reinforcement, complete in place, will be considered completely covered by the contract unit price for Modified Type D Barrier per linear foot.

Concrete in the barrier shall be Class B-1.

Measurement of barrier is to the nearest linear foot for each structure, measured along the top of approach slab at roadway face of barrier as detailed.

Concrete traffic barrier delineators shall be placed on top of the barrier as shown on Missouri Standard Plan 617.10 and in accordance with Sec 617. Delineators on bridges with two-lane, two-way traffic shall have retroreflective sheeting on both sides. Concrete traffic barrier delineators will be considered completely covered by the contract unit price for Modified Type D Barrier.

The contractor shall use one of the qualified resin anchor systems in accordance with Sec 1039.

Cost of furnishing and installing resin anchor systems, complete in place, will be considered completely covered by the contract unit price for Modified Type D Barrier.

The minimum embedment depth in concrete with f'c = 4000 psi for the resin anchor system shall be that required to meet the minimum ultimate pullout strength in accordance with Sec 1039 but shall not be less than 5".

A galvanized #5 Grade 60 reinforcing bar shall be substituted for the 5/8"Ø threaded rod.

MODIFIED TYPE D BARRIER (RIGHT) AT APPROACH SLABS

Detailed September 2025
Checked September 2025

Note: This drawing is not to scale. Follow dimensions.

RYAN DAVID SHAW
NUMBER PE-2017003268
STATE OF MISSOURI
PROFESSIONAL ENGINEER
THIS SHEET HAS BEEN SIGNED, SEALED AND DATED ELECTRONICALLY

DATE PREPARED 4/1/2026
ROUTE I-270 | STATE MO
DISTRICT BR | SHEET NO. 32
COUNTY ST. LOUIS
JOB NO. JSL0021
CONTRACT ID.
PROJECT NO.
BRIDGE NO. A9490

DESCRIPTION | DATE

MISSOURI HIGHWAYS AND TRANSPORTATION COMMISSION
105 WEST CAPITOL
JEFFERSON CITY, MO 65102
1-888-ASK-MODOT (1-888-275-6636)
HDR Engineering, Inc.
1001 Highlands Plaza Drive
Suite 200
St. Louis, MO 63110
314-425-8300
Certificate of Authority: 000856

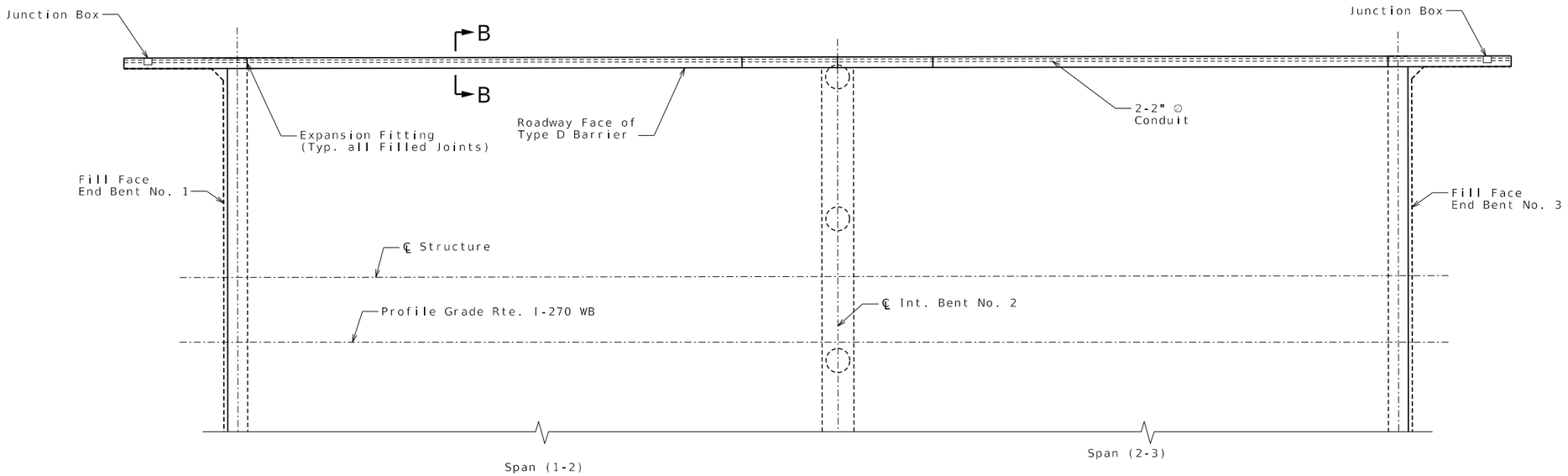

PLAN OF CONDUIT SYSTEM

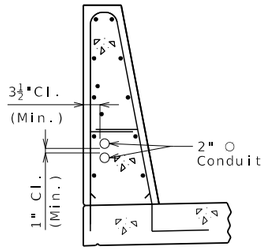

SECTION B-B
(Left barrier)

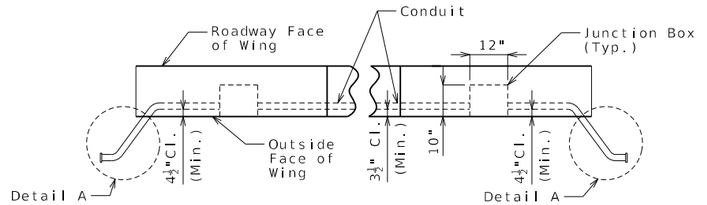

PART PLAN OF BARRIER SHOWING
DELINEATED CONDUIT SYSTEM PLACEMENT

(Single conduit shown, multiple conduits similar.)
(Expansion fitting and deflection coupling not shown for clarity.)

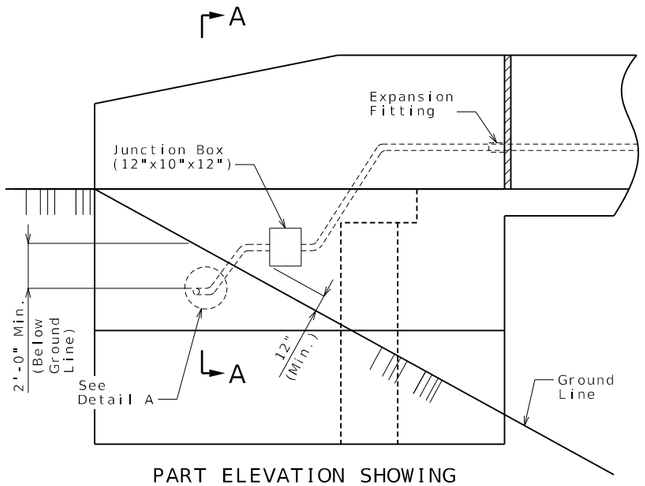

PART ELEVATION SHOWING
JUNCTION BOX IN WING

(Single conduit shown, multiple conduits similar.)

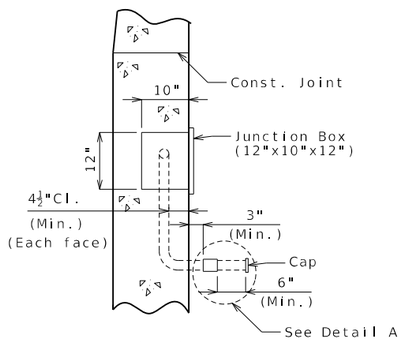

PART SECTION A-A

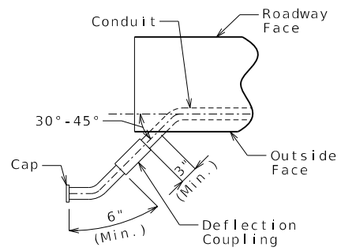

DETAIL A

CONDUIT SYSTEM DETAILS

Notes:

All conduits shall be rigid, nonmetallic, Schedule 40, heavy wall polyvinyl chloride (PVC) with 3 1/2" minimum cover in barrier and 4 1/2" minimum cover in abutment wing. Each section of conduit shall bear the Underwriters Laboratories (UL) label.

Shift reinforcing steel in field where necessary to clear conduit and junction boxes.

Expansion fittings shall be placed as shown and set in accordance with the manufacturer's requirements and based on the air temperature at the time of setting given an estimated total expansion movement of 1 inch at closed joints using a maximum temperature range of 120°F and a maximum temperature of 110°F.

Minimum clearance between conduits placed in barrier shall be 1".

All junction boxes shall be PVC molded in accordance with Sec 1062 and designed for flush mounting. The conduit terminations shall be permanent or separable. The terminations and covers shall be of watertight construction and shall meet requirements for NEMA 4 or NEMA 4X enclosures.

Drainage shall be provided at low points or other critical locations of all conduits and all junction boxes in accordance with Sec 707. All conduits shall be sloped to drain where possible.

Junction box size shown on plan may require special order. Smaller junction box may be substituted if junction box meets conduit installation, clearance and project requirements.

MoDOT Construction Personnel: Indicate in field and on bridge plans for future work the exact location of buried conduit at ends of bridge that are capped and not immediately used.

Payment for furnishing and installing Conduit System, complete in place, will be considered completely covered by the contract lump sum price for Conduit System on Structure.

STATE OF MISSOURI
RYAN DAVID SHAW
NUMBER PE-2017002388
PROFESSIONAL ENGINEER
THIS SHEET HAS BEEN SIGNED, SEALED AND DATED ELECTRONICALLY

DATE PREPARED
4/1/2026

ROUTE	STATE
I-270	MO
DISTRICT	SHEET NO.
BR	33

COUNTY
ST. LOUIS

JOB NO.
JSL0021

CONTRACT ID.

PROJECT NO.

BRIDGE NO.
A9490

DESCRIPTION	DATE

MISSOURI HIGHWAYS AND TRANSPORTATION COMMISSION
105 WEST CAPITOL
JEFFERSON CITY, MO 65102
1-888-ASK-MODOT (1-888-275-6636)

HDR Engineering, Inc.
1001 Highlands Plaza Drive
Suite 200
St. Louis, MO 63110
314-425-8300
Certificate of Authority: 000856

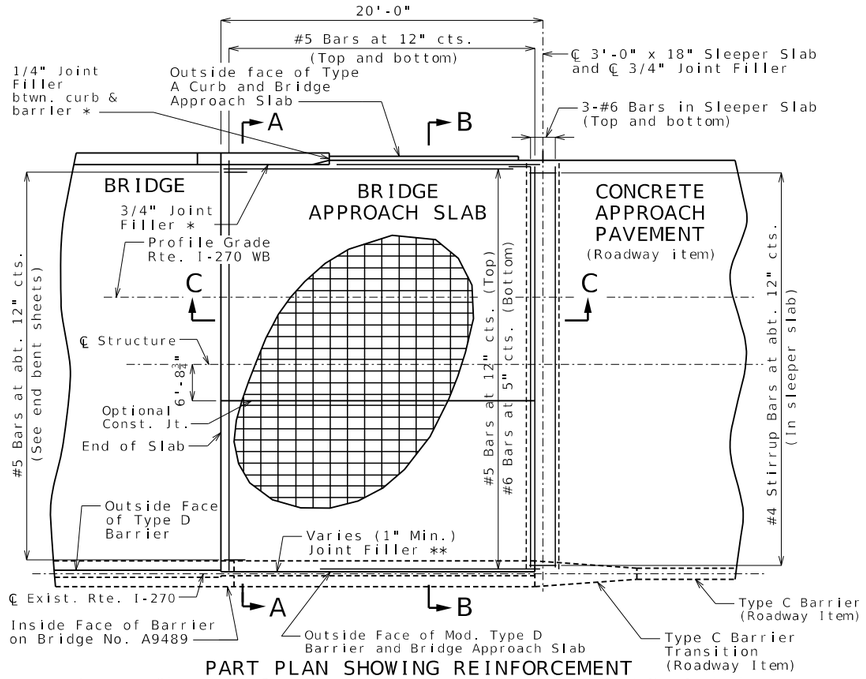

PART PLAN SHOWING REINFORCEMENT

(Approach Slab at End Bent No. 3 shown, Approach Slab at End Bent No. 1 similar)

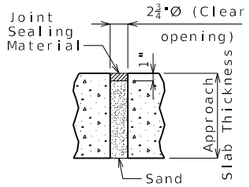

UNDERSEAL ACCESS HOLE DETAIL

(If required)

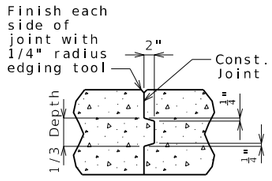

CONSTRUCTION JOINT DETAIL

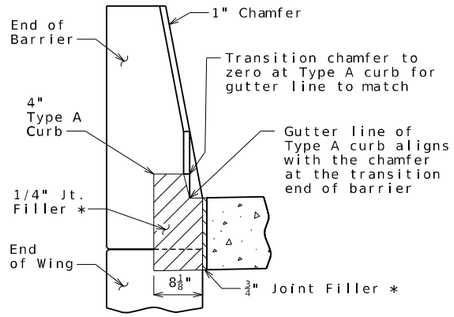

SECTION BETWEEN CURB AND BARRIER

General Notes:

All concrete for the bridge approach slab and sleeper slab shall be in accordance with Sec 503 (f'c = 4,000 psi).

The reinforcing steel in the bridge approach slab and the sleeper slab shall be galvanized Grade 60 with fy = 60,000 psi.

Drain pipe may be either 6" diameter corrugated metallic-coated pipe underdrain, 4" diameter corrugated polyvinyl chloride (PVC) drain pipe, or 4" diameter corrugated polyethylene (PE) drain pipe.

Minimum clearance to reinforcing steel shall be 1 1/2", unless otherwise shown.

The reinforcing steel in the bridge approach slab and the sleeper slab shall be continuous. The transverse reinforcing steel may be made continuous by providing a minimum lap splice of 24 inches for #5 bars and 40 inches for #6 bars, or by mechanical bar splice.

Mechanical bar splices shall be in accordance with Sec 710.

All joint filler shall be in accordance with Sec 1057 for preformed fiber expansion joint filler except as noted.

The contractor shall pour and satisfactorily finish the bridge slab before placing the bridge approach slab.

Longitudinal construction joints in approach slab and sleeper slab shall be aligned with longitudinal construction joints in bridge slab.

For concrete approach pavement details, see roadway plans.

See Missouri Standard Plan 609.00 for details of Type A curb.

Payment for furnishing all materials, labor and excavation necessary to construct the approach slab, including the timber header, sleeper slab, underdrain, Type 5 aggregate base, joint filler and all other appurtenances and incidental work as shown on this sheet, complete in place, will be considered completely covered by the contract unit price for Bridge Approach Slab (Major) per square yard.

* Seal joint between vertical face of approach slab and wing with sealant in accordance with Sec 717 for silicone joint sealant for saw cut and formed joints.

** Seal joint between vertical faces of Mod. Type D Barriers, approach slabs and wings of Bridge No. A9489 and Bridge No. A9490 with sealant in accordance with Sec 717 for silicone joint sealant for saw cut and formed joints.

*** 3" joint filler between top of right wing wall and bottom of approach slab.

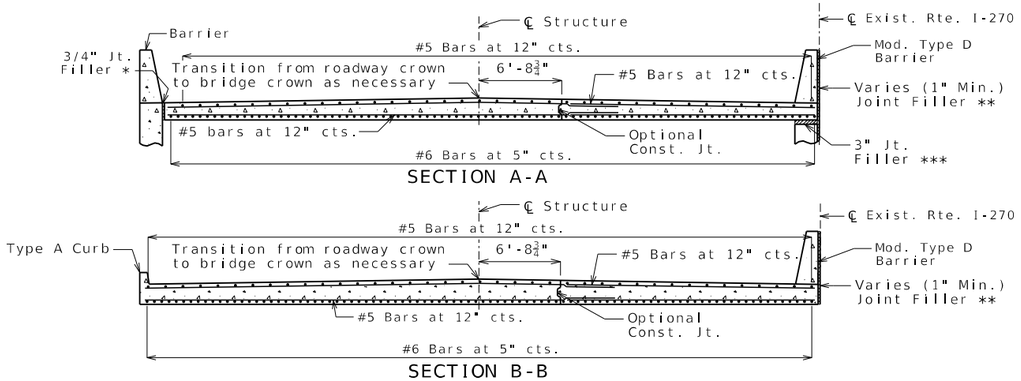

SECTION A-A

SECTION B-B

With the approval of the engineer, the contractor may crown the bottom of the approach slab to match the crown of the roadway surface.

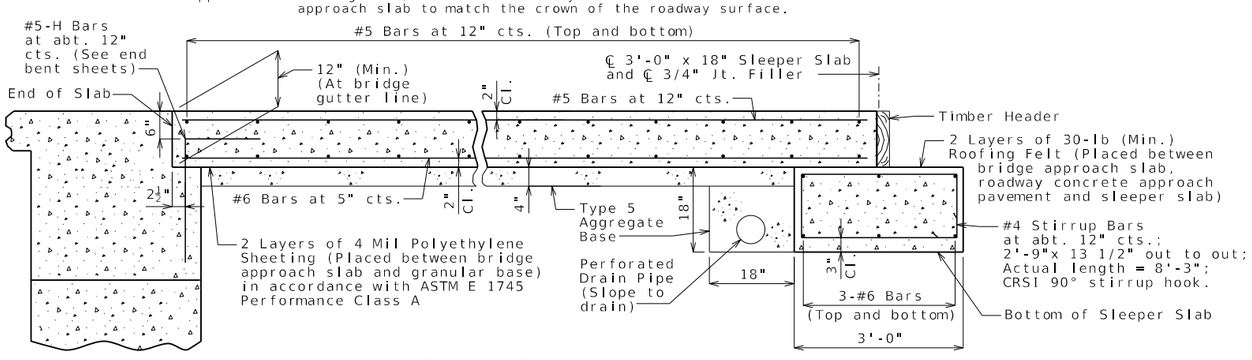

SECTION C-C

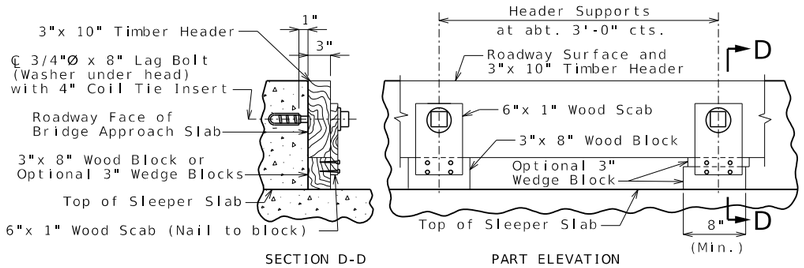

SECTION D-D PART ELEVATION

DETAILS OF TIMBER HEADER

Remove timber header when concrete pavement is placed.

BRIDGE APPROACH SLAB (MAJOR)

Detailed September 2025
Checked September 2025

Note: This drawing is not to scale. Follow dimensions.

STATE OF MISSOURI
RYAN DAVID SHAW
NUMBER PE-2017002388
PROFESSIONAL ENGINEER
THIS SHEET HAS BEEN SIGNED, SEALED AND DATED ELECTRONICALLY

DATE PREPARED 4/1/2026

ROUTE	STATE
I-270	MO
DISTRICT	SHEET NO.
BR	34

COUNTY: ST. LOUIS
JOB NO.: JSL0021
CONTRACT ID.:
PROJECT NO.:
BRIDGE NO.: A9490

DATE	DESCRIPTION

MISSOURI HIGHWAYS AND TRANSPORTATION COMMISSION
105 WEST CAPITOL
JEFFERSON CITY, MO 65102
1-888-ASK-MODOT (1-888-275-6636)

HDR Engineering, Inc.
1001 Highlands Plaza Drive
Suite 200
St. Louis, MO 63110
314-425-8300
Certificate of Authority: 000856

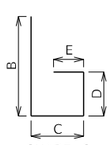

SHAPE 6
or 6S

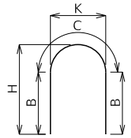

SHAPE 7

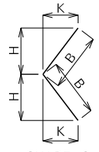

SHAPE 8
or 8S

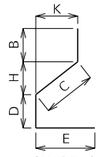

SHAPE 9
or 9S

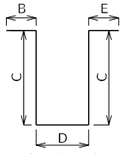

SHAPE 10
or 10S

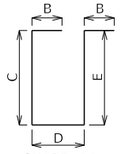

SHAPE 11
or 11S

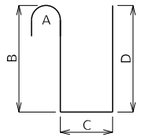

SHAPE 12

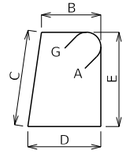

SHAPE 13S

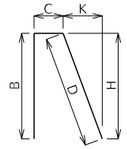

SHAPE 14
or 14S

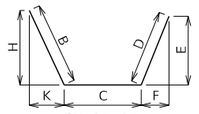

SHAPE 15
or 15S

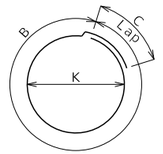

SHAPE 16

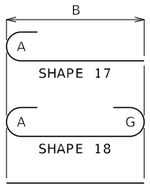

SHAPE 17
SHAPE 18
SHAPE 20

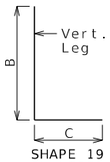

SHAPE 19
or 19S

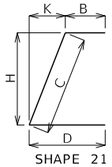

SHAPE 21
or 21S

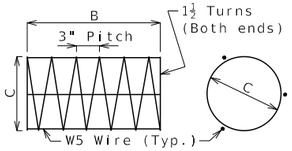

SHAPE 22

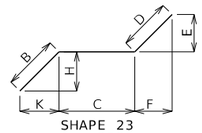

SHAPE 23
or 23S

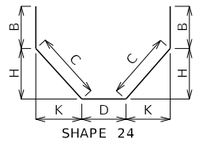

SHAPE 24
or 24S

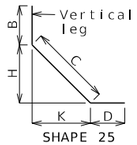

SHAPE 25
or 25S

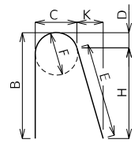

SHAPE 26

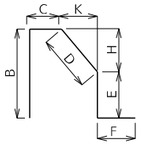

SHAPE 27S

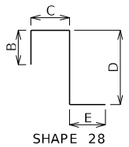

SHAPE 28
or 28S

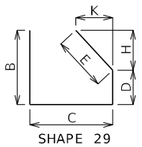

SHAPE 29
or 29S

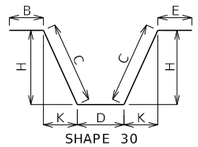

SHAPE 30
or 30S

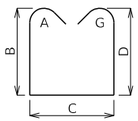

SHAPE 31S

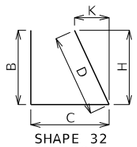

SHAPE 32
or 32S

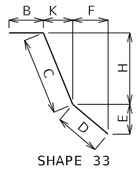

SHAPE 33
or 33S

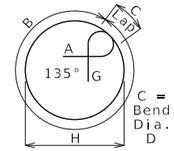

SHAPE 34S

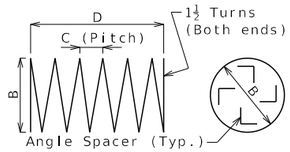

SHAPE 35 (1)

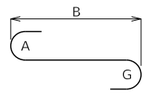

SHAPE 36

Finished Bend Diameters D and Hook Dimensions

Standard Pin Bend Shapes

Size	Case	D	A or G		J
			90°	180°	180°
#4	1	3"	8"	6"	4"
#5	1	3¾"	10"	7"	5"
#6	1	4½"	12"	8¼"	6"
#7	2	5¼"	14"	9⅜"	7"
	3	7"	15"	11½"	8¾"
#8	2	6"	16"	11"	8"
	3	8"	17"	13¼"	10"
#9	1	9½"	19½"	15½"	11¾"
#10	1	10¾"	22"	17½"	13¼"
#11	1	12"	24½"	19½"	14⅞"
#14	1	18¼"	31¼"	27½"	21⅝"
#18	1	24"	41½"	36¼"	28½"

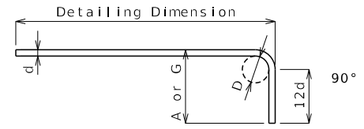

Stirrup Pin Bend Shapes (S)

Size	Case	D	A or G			H	J
			90°	135°	180°	135°	180°
#4	2	2"	4½"	4½"	5"	2⅝"	3"
	3	3"	5"	5¼"	6"	3"	4"
#5	2	2½"	5¾"	5¾"	5¾"	3⅝"	3¾"
	3	3¾"	6¼"	6½"	7"	3⅞"	5"
#6	1	4½"	12"	7¾"	8¼"	4⅝"	6"

Applicable for all grades of steel.

Case 1 applies to all reinforcement. Case 2 applies to all reinforcement except for galvanized bars. Case 3 applies to galvanized bars only.

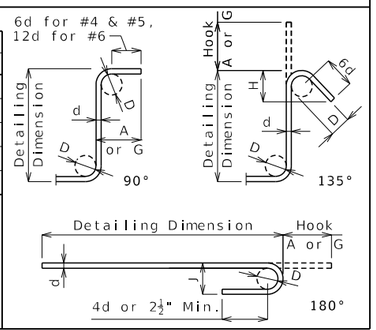

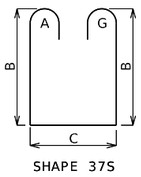

SHAPE 37S

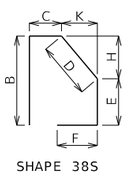

SHAPE 38S

BENDING DIAGRAMS

All dimensions are out to out.

Shapes ending with an S shall be bent in accordance with stirrup pin bend shapes.

Unless otherwise noted, finished bending diameter D is the same for all bends of a shape.

(1) Shall be a deformed or plain spiral bar or wire.

Four angle or channel spacers are required for each column spiral. Spacers are to be placed on inside of spirals. Length and weight of column spirals do not include splices or spacers.

Reinforcing Steel Totals (Pounds)

	Size	Substructure Plain	Substructure Galv.	Superstructure Slab Plain	Superstructure Slab Galv.	Superstructure Type D Barrier	Superstructure Mod. Type D Barrier	Superstructure Slip Form	Entire Bridge Plain	Entire Bridge Galv.
By Size	W5	0	0	0	0	0	0	0	0	0
	4	0	0	0	1,153	0	0	0	0	1,153
	5	0	10,263	0	21,465	8,306	935	350	0	41,319
	6	0	1,376	0	59,753	0	0	0	0	61,129
	7	0	0	0	4,140	0	0	0	0	4,140
	8	0	2,657	0	12,045	0	0	0	0	14,702
	9	0	0	0	0	0	0	0	0	0
	10	0	25,889	0	0	0	0	0	0	25,889
	11	0	0	0	0	0	0	0	0	0
	14	0	0	0	0	0	0	0	0	0
	18	0	0	0	0	0	0	0	0	0
By Type		0	40,185	0	98,556	8,306	935	350	0	148,332

All reinforcing steel shall be galvanized unless otherwise specified.

Products used to repair damaged zinc coating shall not contain aluminum.

Reinforcing steel (ASTM A706 Grade 60) fy = 60,000 psi.

BENDING DIAGRAMS AND REINFORCING STEEL TOTALS

Detailed September 2025
Checked September 2025

Note: This drawing is not to scale. Follow dimensions.

STATE OF MISSOURI
RYAN DAVID SHAW
NUMBER PE-2017002368
PROFESSIONAL ENGINEER
THIS SHEET HAS BEEN SIGNED, SEALED AND DATED ELECTRONICALLY

DATE PREPARED 4/1/2026

ROUTE	STATE
I-270	MO
DISTRICT	SHEET NO.
BR	35

COUNTY: ST. LOUIS
JOB NO.: JSL0021
CONTRACT ID.:
PROJECT NO.:
BRIDGE NO.: A9490

DATE	DESCRIPTION

MISSOURI HIGHWAYS AND TRANSPORTATION COMMISSION
105 WEST CAPITOL
JEFFERSON CITY, MO 65102
1-888-ASK-MODOT (1-888-275-6636)

HDR Engineering, Inc.
1001 Highlands Plaza Drive
Suite 200
St. Louis, MO 63110
314-425-8300
Certificate of Authority: 000856

Bill of Reinforcing Steel

No. Req.	Size/ Mark	Location	Codes C	SH	V	Dimensions B ft in.	C ft in.	D ft in.	E ft in.	F ft in.	H ft in.	K ft in.	Nom. Length ft in.	Actual Length ft in.	Weight lb
		Substructure													
		Intermediate Bent No. 2													
8	10 H200	BEAM	G	17		31 1.00							32 6	32 6	1,119
8	10 H201	BEAM	G	17		33 8.00							35 1	35 1	1,208
12	6 H202	BEAM	G	20		27 6.00							27 6	27 6	496
12	6 H203	BEAM	G	20		33 8.00							33 8	33 8	607
8	8 H204	BEAM	G	17		29 9.00							30 10	30 10	659
8	8 H205	BEAM	G	17		33 8.00							34 9	34 9	743
8	8 H206	BEAM	G	20		11 9.00							11 9	11 9	251
8	8 H207	BEAM	G	20		33 8.00							33 8	33 8	719
8	8 H208	BEAM	G	20		13 4.00							13 4	13 4	285
32	5 U200	BEAM	G	13S		3 9.00	4 9.00	3 9.00	4 9.00				18 2	17 10	594
5	5 U201	BEAM	G	10S			4 9.00	3 9.00					13 3	13 0	68
45	5 U202	BEAM	G	13S		3 9.00	5 1.25	3 9.00	5 1.25				18 11	18 6	868
10	5 U203	BEAM	G	10S			5 1.25	3 9.00					13 12	13 9	143
22	5 U204	BEAM	G	13S		3 9.00	5 5.25	3 9.00	5 5.25				19 7	19 2	440
5	5 U205	BEAM	G	10S			5 5.25	3 9.00					14 8	14 5	75
17	6 U206	BEAM	G	10S			12.00	3 9.00					5 9	5 5	138
24	10 V200	DRILLED SHAFT	G	20		60 0.00							60 0	60 0	6,196
24	10 V201	DRILLED SHAFT	G	20		54 1.00							54 1	54 1	5,585
24	10 V202	DRILLED SHAFT	G	17		52 8.00							54 1	54 1	5,585
24	10 V203	DRILLED SHAFT	G	17		58 7.00							60 0	60 0	6,196
4	5 P200	DRILLED SHAFT	G	35		2 6.00	6.00	85 9.00					1370 6	1342 0	5,599
4	5 P201	DRILLED SHAFT	G	35		2 6.00	4.00	18 3.00					453 7	444 1	1,853
64	5 P202	BEAM	G	34S		7 10.25	3.75				2 6.00		9 4	9 4	623
36	6 D200	BEAM	G	20		2 6.00							2 6	2 6	135
		Superstructure													
		End Bent No. 1													
8	7 H100	BEAM	G	20		32 1.00							32 1	32 1	525
8	7 H101	BEAM	G	20		32 10.00							32 10	32 10	537
4	6 H102	BEAM	G	20		32 1.00							32 1	32 1	193
4	6 H103	BEAM	G	20		32 10.00							32 10	32 10	197
4	7 H104	BEAM	G	20		12 9.00							12 9	12 9	104
4	7 H105	BEAM	G	20		32 10.00							32 10	32 10	268
4	7 H106	BEAM	G	20		13 5.00							13 5	13 5	110
4	7 H107	DIAPHRAGM	G	20		40 8.00							40 8	40 8	332
4	7 H108	DIAPHRAGM	G	20		23 9.00							23 9	23 9	194
2	6 H109	DIAPHRAGM	G	20		2 0.00							2 0	2 0	6
4	6 H110	DIAPHRAGM	G	20		3 4.00							3 4	3 4	20
2	6 H111	DIAPHRAGM	G	20		2 7.00							2 7	2 7	8
6	6 H112	DIAPHRAGM	G	20		5 5.00							5 5	5 5	49
12	6 H113	DIAPHRAGM	G	20		8 2.00							8 2	8 2	147
6	6 H114	DIAPHRAGM	G	20		6 8.00							6 8	6 8	60
4	6 H115	DIAPHRAGM	G	20		39 10.00							39 10	39 10	239
4	6 H116	DIAPHRAGM	G	20		23 9.00							23 9	23 9	143
20	8 H117	WING	G	20		13 7.00							13 7	13 7	725
20	8 H118	WING	G	6		13 7.00	17.00						15 0	14 9	788
8	8 H119	WING	G	20		15 0.00							15 0	15 0	320
8	8 H120	WING	G	6		15 0.00	17.00						16 5	16 2	345
7	5 H121	STRAND TIE	G	20		5 9.00							5 9	5 9	42
59	5 H122	APP. NOTCH	G	19		2 0.00	15.00						3 3	3 1	190
10	5 U100	BEAM	G	37S		4 10.50	2 9.00						13 8	13 5	140
13	4 U101	BEAM	G	13S		2 9.00	2 8.00	2 9.00	2 8.00				11 8	11 4	99
14	5 U102	BEAM	G	37S		5 2.50	2 9.00						14 4	14 1	206
20	4 U103	BEAM	G	13S		2 9.00	3 0.25	2 9.00	3 0.25				12 5	12 1	161
4	5 U104	BEAM	G	37S		5 4.50	2 9.00						14 8	14 5	60
14	4 U105	BEAM	G	13S		2 9.00	3 4.25	2 9.00	3 4.25				13 1	12 9	119
36	5 U106	DIAPHRAGM	G	37S		3 5.50	2 3.00						10 4	10 1	379
36	6 U107	DIAPHRAGM	G	19S		2 8.50	2 9.00						5 6	5 4	288
78	6 U108	DIAPHRAGM	G	19S		2 8.50	4 3.00						7 0	6 10	801
16	5 V100	BEAM	G	17		5 4.00							5 11	5 11	99
47	6 V101	DIAPHRAGM	G	20		2 8.00							2 8	2 8	188
28	6 V102	WING	G	20		6 8.00							6 8	6 8	280
28	6 V103	WING	G	20		6 0.00							6 0	6 0	252

Bill of Reinforcing Steel

No. Req.	Size/ Mark	Location	Codes C	SH	V	Dimensions B ft in.	C ft in.	D ft in.	E ft in.	F ft in.	H ft in.	K ft in.	Nom. Length ft in.	Actual Length ft in.	Weight lb
		Superstructure (cont.)													
		End Bent No. 1 (cont.)													
20	6 F100	WING	G	23		20.00	4 8.00	20.00	14.00	14.00	14.00	14.00	8 0	7 11	238
8	6 F101	WING	G	21		5 6.00	2 9.00						8 3	8 1	97
		Intermediate Bent No. 2 Diaphragm													
12	6 H250	DIAPHRAGM	G	20		5 5.00							5 5	5 5	98
24	4 H251	DIAPHRAGM	G	20		8 2.00							8 2	8 2	131
12	6 H252	DIAPHRAGM	G	20		4 8.00							4 8	4 8	84
4	5 H253	STRAND TIE	G	20		4 6.00							4 6	4 6	19
10	5 H254	STRAND TIE	G	20		5 9.00							5 9	5 9	60
8	6 U250	DIAPHRAGM	G	28S			22.00	2 7.50	22.00				6 4	6 0	72
24	6 U251	DIAPHRAGM	G	28S			2 3.00	2 7.50	22.00				6 9	6 5	231
24	6 U252	DIAPHRAGM	G	28S			2 3.00	3 3.25	22.00				7 4	7 0	252
60	4 U253	DIAPHRAGM	G	28S			2 3.00	3 3.00	15.00				6 9	6 7	264
12	5 U254	DIAPHRAGM	G	6		4 4.75	11.00	17.25					6 9	6 6	81
4	5 U255	DIAPHRAGM	G	6		4 4.75	11.00						5 4	5 2	22
8	5 V250	DIAPHRAGM	G	20		3 4.00							3 4	3 4	28
		End Bent No. 3													
8	7 H300	BEAM	G	20		32 1.00							32 1	32 1	525
8	7 H301	BEAM	G	20		32 10.00							32 10	32 10	537
4	6 H302	BEAM	G	20		32 1.00							32 1	32 1	193
4	6 H303	BEAM	G	20		32 10.00							32 10	32 10	197
4	7 H304	BEAM	G	20		12 9.00							12 9	12 9	104
4	7 H305	BEAM	G	20		32 10.00							32 10	32 10	268
4	7 H306	BEAM	G	20		13 5.00							13 5	13 5	110
4	7 H307	DIAPHRAGM	G	20		40 8.00							40 8	40 8	332
4	7 H308	DIAPHRAGM	G	20		23 9.00							23 9	23 9	194
2	6 H309	DIAPHRAGM	G	20		2 0.00							2 0	2 0	6
4	6 H310	DIAPHRAGM	G	20		3 4.00							3 4	3 4	20
2	6 H311	DIAPHRAGM	G	20		2 7.00							2 7	2 7	8
6	6 H312	DIAPHRAGM	G	20		5 5.00							5 5	5 5	49
12	6 H313	DIAPHRAGM	G	20		8 2.00							8 2	8 2	147
6	6 H314	DIAPHRAGM	G	20		6 8.00							6 8	6 8	60
4	6 H315	DIAPHRAGM	G	20		39 10.00							39 10	39 10	239
4	6 H316	DIAPHRAGM	G	20		23 9.00							23 9	23 9	143
20	8 H317	WING	G	20		13 7.00							13 7	13 7	725
20	8 H318	WING	G	6		13 7.00	17.00						15 0	14 9	788
8	8 H319	WING	G	20		15 0.00							15 0	15 0	320
8	8 H320	WING	G	6		15 0.00	17.00						16 5	16 2	345
7	5 H321	STRAND TIE	G	20		5 9.00							5 9	5 9	42
59	5 H322	APP. NOTCH	G	19		2 0.00	15.00						3 3	3 1	190
10	5 U300	BEAM	G	37S		4 10.25	2 9.00						13 8	13 5	140
13	4 U301	BEAM	G	13S		2 9.00	2 8.00	2 9.00	2 8.00				11 8	11 4	99
14	5 U302	BEAM	G	37S		5 2.50	2 9.00						14 4	14 1	206
20	4 U303	BEAM	G	13S		2 9.00	3 0.25	2 9.00	3 0.25				12 5	12 1	161
4	5 U304	BEAM	G	37S		5 4.50	2 9.00						14 8	14 5	60
14	4 U305	BEAM	G	13S		2 9.00	3 4.25	2 9.00	3 4.25				13 1	12 9	119
36	5 U306	DIAPHRAGM	G	37S		3 4.00	2 3.00						10 1	9 10	369
36	6 U307	DIAPHRAGM	G	19S		2 7.00	2 9.00						5 4	5 2	279
78	6 U308	DIAPHRAGM	G	19S		2 8.50	4 3.00						7 0	6 10	801
16	5 V300	BEAM	G	17		5 4.00							5 11	5 11	99
47	6 V301	DIAPHRAGM	G	20		2 7.00							2 7	2 7	182
28	6 V302	WING	G	20		6 3.00							6 3	6 3	263
28	6 V303	WING	G	20		5 6.00							5 6	5 6	231
20	6 F300	WING	G	23		20.00	4 8.00	20.00	14.00	14.00	14.00	14.00	8 0	7 11	238
8	6 F301	WING	G	21		5 6.00	2 9.00						8 3	8 1	97
		Slab													
168	6 S1	SLAB	G	20		51 1.00							51 1	51 1	12,890
287	5 S2	SLAB	G	20		40 0.00							40 0	40 0	11,974
287	5 S3	SLAB	G	20		23 7.00							23 7	23 7	7,059
153	6 S4	SLAB	G	20		50 9.00							50 9	50 9	11,663
48	8 S5	SLAB	G	20		20 0.00							20 0	20 0	2,563
48	8 S6	SLAB	G	20		40 0.00							40 0	40 0	5,126
297	6 S7	SLAB	G	20		39 5.00							39 5	39 5	17,584
297	6 S8	SLAB	G	20		23 7.00							23 7	23 7	10,520

Nominal lengths are based on out to out dimensions shown in bending diagrams and are listed to the nearest inch for fabricator's use. Actual lengths are measured along centerline bar to the nearest inch. Weights are based on actual lengths.

For bending diagrams and steel reinforcing totals, see Sheet No. 35.

Detailed September 2025
Checked September 2025

Reinforcing steel (ASTM A706 Grade 60) fy = 60,000 psi.

Codes: C = Required coatings, where E = Epoxy Coated and G = Galvanized.

SH = Required shape, see bending diagrams.

V = Sets of varied bars and number of bars of each length. Bar dimensions vary in equal increments between dimensions shown on this line and the following line and the actual length dimension shown on this line and the following line vary by the specified increment.

BILL OF REINFORCING STEEL

Note: This drawing is not to scale. Follow dimensions.

STATE OF MISSOURI
RYAN DAVID SHAW
NUMBER PE-2017002868
PROFESSIONAL ENGINEER
THIS SHEET HAS BEEN SIGNED, SEALED AND DATED ELECTRONICALLY

DATE PREPARED 4/1/2026
ROUTE I-270 | STATE MO
DISTRICT BR | SHEET NO. 36
COUNTY ST. LOUIS
JOB NO. JSL0021
CONTRACT ID.
PROJECT NO.
BRIDGE NO. A9490

DESCRIPTION | DATE

MISSOURI HIGHWAYS AND TRANSPORTATION COMMISSION
105 WEST CAPITOL
JEFFERSON CITY, MO 65102
1-888-ASK-MODOT (1-888-275-6636)

HDR Engineering, Inc.
1001 Highlands Plaza Drive
Suite 200
St. Louis, MO 63110
314-425-8300
Certificate of Authority: 000856

Bill of Reinforcing Steel

No. Req.	Size/ Mark	Location	Codes C	SH	V	Dimensions B ft in.	C ft in.	D ft in.	E ft in.	F ft in.	H ft in.	K ft in.	Nom. Length ft in.	Actual Length ft in.	Weight lb
		Superstructure (cont.)													
		Barriers													
		Type D													
10	5 K1	BARRIER	G	27S		3 5.00	9.25	5.25	2 11.75		5.25	1.00	7 7	7 4	76
42	5 K2	BARRIER	G	27S		3 5.00	9.25	14.50	2 2.75		14.25	2.75	7 8	7 5	325
10	5 K4	BARRIER	G	19S	2	2 6.25	10.00						3 4	3 3	
		(INCR. = 1/2")				2 4.25	10.00						3 2	3 1	33
10	5 K5	BARRIER	G	38S	2			18.25	9.50	8.25	18.00	4.00	3 0	3 0	
		(INCR. = 1/2")						20.50	9.50	8.25	20.00	4.50	3 2	3 0	30
6	5 K6	BARRIER	G	19S		2 6.75	10.00						3 5	3 4	21
6	5 K7	BARRIER	G	21S			2 6.50	10.00			2 6.00	6.25	3 5	3 3	20
18	5 K8	BARRIER	G	19S	2	2 8.50	10.00						3 7	3 6	
		(INCR. = 3/4")				3 2.50	10.00						4 1	4 0	69
18	5 K9	BARRIER	G	21S	2		2 8.50	10.00			2 7.75	6.75	3 7	3 5	
		(INCR. = 3/4")					3 2.50	10.00			3 1.75	7.75	4 1	3 11	68
18	5 K10	BARRIER	G	19S		3 3.00	10.00						4 1	4 0	75
18	5 K11	BARRIER	G	21S			3 3.00	10.00			3 2.25	7.75	4 1	3 11	74
12	5 K12	BARRIER	G	20		15 3.00							15 3	15 3	191
6	5 K13	BARRIER	G	20	2	8 6.00							8 6	8 6	
		(INCR. = 3'-0")				14 6.00							14 6	14 6	72
12	5 K14	BARRIER	G	20		15 3.00							15 3	15 3	191
6	5 K15	BARRIER	G	20	2	8 6.00							8 6	8 6	
		(INCR. = 3'-0")				14 6.00							14 6	14 6	72
300	5 R1	BARRIER	G	26S		3 3.00	5.50	2.25	3 1.25	5.50	3 0.75	6.75	6 10	6 10	2,138
300	5 R2	BARRIER	G	19S		20.50	9.50						2 6	2 5	756
300	5 R3	BARRIER	G	27S			9.50	15.25	5.00	12.00	15.00	3.00	3 6	3 3	1,017
40	5 R4	BARRIER	G	20		11 9.00							11 9	11 9	490
20	5 R5	BARRIER	G	20		33 6.00							33 6	33 6	699
10	5 R6	BARRIER	G	20		59 6.00							59 6	59 6	621
20	5 R7	BARRIER	G	20		32 3.00							32 3	32 3	673
10	5 R8	BARRIER	G	20		57 0.00							57 0	57 0	595
		Modified Type D													
42	5 M1	MODIFIED BARRIER	G	26S		3 3.00	6.50	2.25	3 1.25	6.50	3 0.75	6.75	6 11	6 11	303
42	5 M2	MODIFIED BARRIER	G	19S		20.50	10.50						2 7	2 6	110
42	5 M3	MODIFIED BARRIER	G	27S			10.50	15.25	5.00		15.00	3.00	2 7	2 6	110
20	5 M4	MODIFIED BARRIER	G	20		19 9.00							19 9	19 9	412
		Slip Form													
28	5 C1	SLIP FORM	G	20		12 0.00							12 0	12 0	350

Bill of Reinforcing Steel

No. Req.	Size/ Mark	Location	Codes C	SH	V	Dimensions B ft in.	C ft in.	D ft in.	E ft in.	F ft in.	H ft in.	K ft in.	Nom. Length ft in.	Actual Length ft in.	Weight lb

Nominal lengths are based on out to out dimensions shown in bending diagrams and are listed to the nearest inch for fabricator's use. Actual lengths are measured along centerline bar to the nearest inch. Weights are based on actual lengths.

For bending diagrams and steel reinforcing totals, see Sheet No. 35.

Detailed September 2025
Checked September 2025

Reinforcing steel (ASTM A706 Grade 60) fy = 60,000 psi.

Note: This drawing is not to scale. Follow dimensions.

Codes: C = Required coatings, where E = Epoxy Coated and G = Galvanized.

SH = Required shape, see bending diagrams.

V = Sets of varied bars and number of bars of each length. Bar dimensions vary in equal increments between dimensions shown on this line and the following line and the actual length dimension shown on this line and the following line vary by the specified increment.

BILL OF REINFORCING STEEL

STATE OF MISSOURI
RYAN DAVID SHAW
NUMBER PE-2017002868
PROFESSIONAL ENGINEER
THIS SHEET HAS BEEN SIGNED, SEALED AND DATED ELECTRONICALLY

DATE PREPARED 4/1/2026
ROUTE I-270 | STATE MO
DISTRICT BR | SHEET NO. 37
COUNTY ST. LOUIS
JOB NO. JSL0021
CONTRACT ID.
PROJECT NO.
BRIDGE NO. A9490

DESCRIPTION | DATE

MISSOURI HIGHWAYS AND TRANSPORTATION COMMISSION
105 WEST CAPITOL
JEFFERSON CITY, MO 65102
1-888-ASK-MODOT (1-888-275-6636)

HDR Engineering, Inc.
1001 Highlands Plaza Drive
Suite 200
St. Louis, MO 63110
314-425-8300
Certificate of Authority: 000856

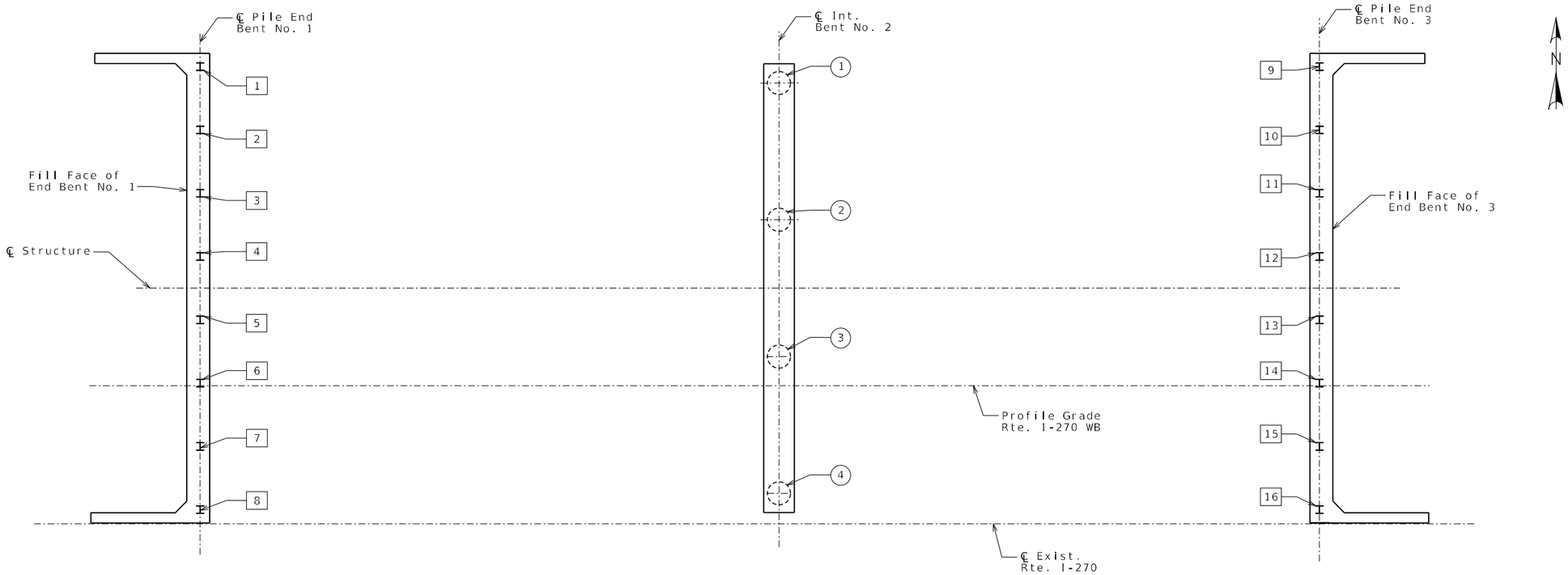

PART PLAN SHOWING PILE & DRILLED SHAFT NUMBERING FOR RECORDING AS-BUILT PILE DATA & AS-BUILT DRILLED SHAFT DATA

As-Built Pile Data			
Pile No.	Length in Place (ft)	Computed Nominal Axial Compressive Resistance (kips)	Remarks
			End Bent No. 1
1			
2			
3			
4			
5			
6			
7			
8			

As-Built Drilled Shaft Data				
Shaft No.	Top of Sound Rock (Elev.)	Tip of Casing (Elev.)	Bottom of Rock Socket (Elev.)	Remarks
				Int. Bent No. 2
1				
2				
3				
4				

As-Built Pile Data			
Pile No.	Length in Place (ft)	Computed Nominal Axial Compressive Resistance (kips)	Remarks
			End Bent No. 3
9			
10			
11			
12			
13			
14			
15			
16			

Note:
Indicate in remarks column:
A. Pile type and grade
B. Batter
C. Driven to practical refusal

This sheet to be completed by MoDOT construction personnel.

AS-BUILT PILE & DRILLED SHAFT DATA

Detailed September 2025
Checked September 2025

Note: This drawing is not to scale. Follow dimensions.

RYAN DAVID SHAW
NUMBER PE-2017002388
PROFESSIONAL ENGINEER
STATE OF MISSOURI
THIS SHEET HAS BEEN SIGNED, SEALED AND DATED ELECTRONICALLY

DATE PREPARED 4/1/2026
ROUTE I-270 | STATE MO
DISTRICT BR | SHEET NO. 38
COUNTY ST. LOUIS
JOB NO. JSL0021
CONTRACT ID.
PROJECT NO.
BRIDGE NO. A9490

DESCRIPTION | DATE

MISSOURI HIGHWAYS AND TRANSPORTATION COMMISSION
105 WEST CAPITOL
JEFFERSON CITY, MO 65102
1-888-ASK-MODOT (1-888-275-6636)

HDR Engineering, Inc.
1001 Highlands Plaza Drive
Suite 200
St. Louis, MO 63110
314-425-8300
Certificate of Authority: 000856

Missouri Department of Transportation
Construction and Materials

BORING NO. A9490-101
Page 1 of 3

Job No.: MG24029 **County:** St. Louis **Route:** Route 367
Design: **Skew:** **Location:** St. Louis County, Missouri
Bent: **Logged By:** B. Nepal **Operator:** G. Shetley
Station: **Northing:** 1069740.155 **Date of Work:** 05/23/24-05/23/24
Offset: **Easting:** 894709.716 **Depth to Water:** 23.0
Elevation: 552.4 **Requested Northing:** **Depth Hole Open:**
Requested Station: **Requested Easting:** **Time Change:**
Requested Offset: **Equipment:** CME 750Y ,Split-Spoon Sampler, Shelby Tube, NQ
Requested Elevation: **Location Note:**
Drill No.: UES **Hammer Efficiency:** 95% **Drilling Method:** Hollow Stem Auger

Depth (ft)	Graphic	Description	Elevation (ft)	Sample Type	REC % (RQD %)	Blow Counts (N_{60})	Shear Data	Field Tests	Incex Tests
0		0.0-0.5' ASPHALT (6.0")							
		0.5-1.0' CONCRETE (6.0")							
		1.0-7.0' Brown, lean CLAY (CL)	550						
5				X	11	3-3-2 (8)			MC = 8.5%
		7.0-12.0' Brown, fat CLAY (CH), mottled black	545						
10				X	83	3-3-4 (11)		PP = 2.75 tsf	MC = 23.4%
		12.0-17.0' Light grey, lean CLAY (CL), trace gravel	540						
15				■	83		Qu Test Results UCS = 4.52 ksf MC = 27.6% γ_{moist} = 129.05 pcf	PP = 2.50 tsf	MC = 27.6%
		17.0-22.0' Brown, lean CLAY (CL), with sand	535						
20				X	100	2-2-3 (8)		PP = 0.25 tsf	MC = 25.7%
		22.0-27.0' Tan, clayey SAND (SC)	530						
25				X	100	1-0-0 (0)			MC = 33.9%
		27.0-32.0' Brown and grey, fat CLAY (CH), trace to with sand	525						
30				X	100	3-3-4 (11)		PP = 1.50 tsf	MC = 30.0%
		32.0-37.0' Brown and grey, lean CLAY (CL), trace sand	520						
35				X	100	2-2-4 (10)		PP = 0.50 tsf	MC = 21.7%

N_{60} = (Em/60)Nm N_{60} - Corrected N value for standard 60% SPT efficiency; Em - Measured hammer efficiency in percent; Nm - Observed N-value; (1) = Assumed, (2) = Actual

Coordinate System: **Coordinate Zone:** **Coordinate Proj. Factor:**
Coordinate Datum: **Coordinate Units:** U.S. Survey Feet

* Persons using this information are cautioned that the materials shown are determined by the equipment noted and accuracy of the "log of materials" is limited thereby and by judgement of the operator. THIS INFORMATICN IS FOR DESIGN PURPOSES ONLY.

LETTER BOREHOLE - MODOT_20151118.GDT - 1/13/25 08:57 - G:\PROJECT FILES\20241\MG24029 I-270 GAP FROM ROUTE 367 TO LILAC AVENUE\FIELD DATA\ROUTE 367\I-270 ROUTE 367 MODOT GINT LOGS.GPJ

Missouri Department of Transportation
Construction and Materials

BORING NO. A9490-101
Page 2 of 3

Job No.: MG24029 **County:** St. Louis **Route:** Route 367
Design: **Skew:** **Location:** St. Louis County, Missouri
Bent: **Logged By:** B. Nepal **Operator:** G. Shetley
Station: **Northing:** 1069740.155 **Date of Work:** 05/23/24-05/23/24
Offset: **Easting:** 894709.716 **Depth to Water:** 23.0
Elevation: 552.4 **Requested Northing:** **Depth Hole Open:**
Requested Station: **Requested Easting:** **Time Change:**
Requested Offset: **Equipment:** CME 750Y ,Split-Spoon Sampler, Shelby Tube, NQ
Requested Elevation: **Location Note:**
Drill No.: UES **Hammer Efficiency:** 95% **Drilling Method:** Hollow Stem Auger

Depth (ft)	Graphic	Description	Elevation (ft)	Sample Type	REC % (RQD %)	Blow Counts (N_{60})	Shear Data	Field Tests	Incex Tests
35		32.0-37.0' Brown and grey, lean CLAY (CL), trace sand *(continued)*							
		37.0-62.0' Grey and brown, fat CLAY (CH), trace oxidation and trace fine sand	515						
40				X	100	3-2-4 (10)		PP = 1.50 tsf	MC = 33.3%
			510						
45				X	100	2-3-2 (8)		PP = 1.50 tsf	MC = 32.4%
			505						
50				X	100	2-3-5 (13)		PP = 0.50 tsf	MC = 33.7%
			500						
55				X	100	3-3-4 (11)		PP = 1.00 tsf	MC = 33.2%
		57.0' - dark brown, trace shale and sandstone below 57 ft.	495						
60				X	100	4-5-7 (19)		PP = 2.50 tsf	MC = 23.2%
		62.0-64.0' Weathered SHALE	490						
65		64.0-66.0' Brown, sandy SHALE, moderately weathered, soft, very finely crystalline to aphanitic, slightly to moderately fractured 65.0' - compressive strength = 1,150 psi		X	100	50/0.4"		PP = 4.50 tsf	MC = 15.0%
				X	88 (54)				
		66.0-74.0' Grey, SANDSTONE AND SILTSTONE, moderately weathered, soft to moderately hard	485						
70				X	98 (83)				

N_{60} = (Em/60)Nm N_{60} - Corrected N value for standard 60% SPT efficiency; Em - Measured hammer efficiency in percent; Nm - Observed N-value; (1) = Assumed, (2) = Actual

Coordinate System: **Coordinate Zone:** **Coordinate Proj. Factor:**
Coordinate Datum: **Coordinate Units:** U.S. Survey Feet

* Persons using this information are cautioned that the materials shown are determined by the equipment noted and accuracy of the "log of materials" is limited thereby and by judgement of the operator. THIS INFORMATION IS FOR DESIGN PURPOSES ONLY.

LETTER BOREHOLE - MODOT_20151118.GDT - 1/13/25 08:57 - G:\PROJECT FILES\20241\MG24029 I-270 GAP FROM ROUTE 367 TO LILAC AVENUE\FIELD DATA\ROUTE 367\I-270 ROUTE 367 MODOT GINT LOGS.GPJ

BORING DATA

Note: For location of borings, see Sheet No. 1.

Detailed September 2025
Checked September 2025

Note: This drawing is not to scale. Follow dimensions.

STATE OF MISSOURI
RYAN DAVID SHAW
NUMBER PE-2017002368
PROFESSIONAL ENGINEER
THIS SHEET HAS BEEN SIGNED, SEALED AND DATED ELECTRONICALLY

DATE PREPARED 4/1/2026
ROUTE I-270 | STATE MO
DISTRICT BR | SHEET NO. 39
COUNTY ST. LOUIS
JOB NO. JSL0021
CONTRACT ID.
PROJECT NO.
BRIDGE NO. A9490

DESCRIPTION | DATE

MISSOURI HIGHWAYS AND TRANSPORTATION COMMISSION
105 WEST CAPITOL
JEFFERSON CITY, MO 65102
1-888-ASK-MODOT (1-888-275-6636)

HDR Engineering, Inc.
1001 Highlands Plaza Drive
Suite 200
St. Louis, MO 63110
314-425-8300
Certificate of Authority: 000856

Missouri Department of Transportation
Construction and Materials

BORING NO. A9490-101
Page 3 of 3

Job No.: MG24029 **County:** St. Louis **Route:** Route 367
Design: **Skew:** **Location:** St. Louis County, Missouri
Bent: **Logged By:** B. Nepal **Operator:** G. Shetley
Station: **Northing:** 1069740.155 **Date of Work:** 05/23/24-05/23/24
Offset: **Easting:** 894709.716 **Depth to Water:** 23.0
Elevation: 552.4 **Requested Northing:** **Depth Hole Open:**
Requested Station: **Requested Easting:** **Time Change:**
Requested Offset: **Equipment:** CME 750Y ,Split-Spoon Sampler, Shelby Tube, NQ
Requested Elevation: **Location Note:**
Drill No.: UES **Hammer Efficiency:** 95% **Drilling Method:** Hollow Stem Auger

Depth (ft)	Graphic	Description	Elevation (ft)	Sample Type	REC % (RQD %)	Blow Counts (N_{60})	Shear Data	Field Tests	Incex Tests
70		65.0-74.0' Grey, SANDSTONE AND SILTSTONE, moderately weathered, soft to moderately hard *(continued)*	480		100 (94)				
		Refusal at 63.9 feet. Bottom of borehole at 74.0 feet.							

N_{60} = (Em/60)Nm N_{60} - Corrected N value for standard 60% SPT efficiency; Em - Measured hammer efficiency in percent; Nm - Observed N-value; (1) = Assumed, (2) = Actual

Coordinate System: **Coordinate Zone:** **Coordinate Proj. Factor:**
Coordinate Datum: **Coordinate Units:** U.S. Survey Feet

* Persons using this information are cautioned that the materials shown are determined by the equipment noted and accuracy of the "log of materials" is limited thereby and by judgement of the operator. THIS INFORMATICN IS FOR DESIGN PURPOSES ONLY.

Missouri Department of Transportation
Construction and Materials

BORING NO. A9490-201
Page 1 of 3

Job No.: MG24029 **County:** St. Louis **Route:** Route 367
Design: **Skew:** **Location:** St. Louis County, Missouri
Bent: **Logged By:** J. Stauffer **Operator:** S. Conrad
Station: **Northing:** 1069739.107 **Date of Work:** 05/20/24-05/21/24
Offset: **Easting:** 894757.588 **Depth to Water:** 14.0
Elevation: 552.4 **Requested Northing:** **Depth Hole Open:**
Requested Station: **Requested Easting:** **Time Change:**
Requested Offset: **Equipment:** CME 55LC ,Split-Spoon Sampler, NQ
Requested Elevation: **Location Note:** elevation approximate
Drill No.: UES **Hammer Efficiency:** 79% **Drilling Method:** Hollow Stem Auger

Depth (ft)	Graphic	Description	Elevation (ft)	Sample Type	REC % (RQD %)	Blow Counts (N_{60})	Shear Data	Field Tests	Incex Tests
0		0.0-0.4' ASPHALT (5.0")							
		0.4-1.0' CONCRETE (7.0")							
		1.0-1.3' CRUSHED LIMESTONE SUBBASE (4.0")							
		1.3-12.0' Brown and grey, lean CLAY (CL)	550						
5					72	5-4-6 (13)		PP = 1.75 tsf	MC = 27.3%
			545						
10					89	2-2-2 (5)		PP = 0.50 tsf	MC = 26.9%
		12.0-17.0' Brown and grey, fat CLAY (CH)	540						
15	▽				100	1-3-4 (9)		PP = 2.00 tsf	MC = 23.1%
		17.0-24.5' Brown and grey, lean CLAY (CL), trace to with sand	535						
20					100	3-3-3 (8)		PP = 1.50 tsf	MC = 23.8%
			530						
25		24.5-37.0' Brown and grey, lean CLAY (CL)			100	2-3-4 (9)		PP = 0.25 tsf	MC = 25.6%
			525						
30					100	1-2-4 (8)		PP = 3.00 tsf	MC = 29.4%
			520						
35					100	1-3-3 (8)		PP = 0.50 tsf	MC = 30.6%

N_{60} = (Em/60)Nm N_{60} - Corrected N value for standard 60% SPT efficiency; Em - Measured hammer efficiency in percent; Nm - Observed N-value; (1) = Assumed, (2) = Actual

Coordinate System: **Coordinate Zone:** **Coordinate Proj. Factor:**
Coordinate Datum: **Coordinate Units:** U.S. Survey Feet

* Persons using this information are cautioned that the materials shown are determined by the equipment noted and accuracy of the "log of materials" is limited thereby and by judgement of the operator. THIS INFORMATION IS FOR DESIGN PURPOSES ONLY.

RYAN DAVID SHAW
NUMBER PE-2017003368
STATE OF MISSOURI
PROFESSIONAL ENGINEER
THIS SHEET HAS BEEN SIGNED, SEALED AND DATED ELECTRONICALLY

DATE PREPARED 4/1/2026
ROUTE I-270 | STATE MO
DISTRICT BR | SHEET NO. 40
COUNTY ST. LOUIS
JOB NO. JSL0021
CONTRACT ID.
PROJECT NO.
BRIDGE NO. A9490

DESCRIPTION
DATE

MISSOURI HIGHWAYS AND TRANSPORTATION COMMISSION
105 WEST CAPITOL
JEFFERSON CITY, MO 65102
1-888-ASK-MODOT (1-888-275-6636)

HDR Engineering, Inc.
1001 Highlands Plaza Drive
Suite 200
St. Louis, MO 63110
314-425-8300
Certificate of Authority: 000856

BORING DATA

Note: For location of borings, see Sheet No. 1.

Detailed September 2025
Checked September 2025

Note: This drawing is not to scale. Follow dimensions.

Sheet No. 40 of 43

c:\pwworking\central01\d4975495\B_A9490_040_SL0021.dgn 3:57:44 PM 4/1/2026

LETTER BOREHOLE - MODOT_20151118.GDT - 1/13/25 08:57 - G:\PROJECT FILES\2024\MG24029 I-270 GAP FROM ROUTE 367 TO LILAC AVENUE\FIELD DATA\ROUTE 367\I-270 ROUTE 367 MODOT GINT LOGS.GPJ

Missouri Department of Transportation
Construction and Materials

BORING NO. A9490-201
Page 2 of 3

Job No.: MG24029 **County:** St. Louis **Route:** Route 367
Design: **Skew:** **Location:** St. Louis County, Missouri
Bent: **Logged By:** J. Stauffer **Operator:** S. Conrad
Station: **Northing:** 1069739.107 **Date of Work:** 05/20/24-05/21/24
Offset: **Easting:** 894757.588 **Depth to Water:** 14.0
Elevation: 552.4 **Requested Northing:** **Depth Hole Open:**
Requested Station: **Requested Easting:** **Time Change:**
Requested Offset: **Equipment:** CME 55LC ,Split-Spoon Sampler, NQ
Requested Elevation: **Location Note:** elevation approximate
Drill No.: UES **Hammer Efficiency:** 79% **Drilling Method:** Hollow Stem Auger

Depth (ft)	Graphic	Description	Elevation (ft)	Sample Type	REC % (RQD %)	Blow Counts (N_{60})	Shear Data	Field Tests	Incex Tests
35		24.5-37.0' Brown and grey, lean CLAY (CL) *(continued)*							
		37.0-63.0' Brown and grey, fat CLAY (CH)	515						
40				X	100	2-3-5 (11)		PP = 2.00 tsf	MC = 32.7%
			510						
45				X	100	3-4-5 (12)		PP = 2.50 tsf	MC = 33.6%
			505						
50				X	100	2-2-4 (8)		PP = 2.00 tsf	MC = 34.7%
			500						
55				X	100	2-4-4 (11)		PP = 1.50 tsf	MC = 34.3%
			495						
60				X	100	4-5-7 (16)		PP = 2.50 tsf	MC = 23.2%
			490						
		63.0-71.8' Brown with orange and black, sandy SHALE AND SILTSTONE, highly to moderately weathered, slightly to moderately fractured, soft to moderately hard, with sandstone lenses			100	50/0.3'		PP >4.50 tsf	MC = 16.0%
65									
			485		93 (66)				
70		63.0' - compressive strength = 1,182 psi 63.5' - compressive strength = 1,555 psi							

N_{60} = (Em/60)Nm N_{60} - Corrected N value for standard 60% SPT efficiency; Em - Measured hammer efficiency in percent; Nm - Observed N-value; (1) = Assumed, (2) = Actual

Coordinate System: **Coordinate Zone:** **Coordinate Proj. Factor:**
Coordinate Datum: **Coordinate Units:** U.S. Survey Feet

* Persons using this information are cautioned that the materials shown are determined by the equipment noted and accuracy of the "log of materials" is limited thereby and by judgement of the operator. THIS INFORMATICN IS FOR DESIGN PURPOSES ONLY.

LETTER BOREHOLE - MODOT_20151118.GDT - 1/13/25 08:57 - G:\PROJECT FILES\2024\MG24029 I-270 GAP FROM ROUTE 367 TO LILAC AVENUE\FIELD DATA\ROUTE 367\I-270 ROUTE 367 MODOT GINT LOGS.GPJ

Missouri Department of Transportation
Construction and Materials

BORING NO. A9490-201
Page 3 of 3

Job No.: MG24029 **County:** St. Louis **Route:** Route 367
Design: **Skew:** **Location:** St. Louis County, Missouri
Bent: **Logged By:** J. Stauffer **Operator:** S. Conrad
Station: **Northing:** 1069739.107 **Date of Work:** 05/20/24-05/21/24
Offset: **Easting:** 894757.588 **Depth to Water:** 14.0
Elevation: 552.4 **Requested Northing:** **Depth Hole Open:**
Requested Station: **Requested Easting:** **Time Change:**
Requested Offset: **Equipment:** CME 55LC ,Split-Spoon Sampler, NQ
Requested Elevation: **Location Note:** elevation approximate
Drill No.: UES **Hammer Efficiency:** 79% **Drilling Method:** Hollow Stem Auger

Depth (ft)	Graphic	Description	Elevation (ft)	Sample Type	REC % (RQD %)	Blow Counts (N_{60})	Shear Data	Field Tests	Incex Tests
70									
		71.8-95.0' Grey, SANDSTONE AND SILTSTONE, slightly to moderately weathered, slightly to moderately fractured, soft to moderately hard	480		100 (100)				
75		72.5' - compressive strength = 2,824 psi 73.0' - compressive strength =2,910 psi							
			475		100 (59)				
80		77.5' - compressive strength = 3.564 psi 79.5' - compressive strength = 3,804 psi							
		80.5' - compressive strength = 4,229 psi	470		100 (100)				
85		82.5' - compressive strength = 4,311 psi 83.3' - compressive strength = 4,095 psi							
			465		97 (94)				
90		87.3' - compressive strength = 4,216 psi 89.5' - compressive strength = 4,336 psi							
			460		100 (100)				
95		Refusal at 64.0 feet. Bottom of borehole at 95.0 feet.							

N_{60} = (Em/60)Nm N_{60} - Corrected N value for standard 60% SPT efficiency; Em - Measured hammer efficiency in percent; Nm - Observed N-value; (1) = Assumed, (2) = Actual

Coordinate System: **Coordinate Zone:** **Coordinate Proj. Factor:**
Coordinate Datum: **Coordinate Units:** U.S. Survey Feet

* Persons using this information are cautioned that the materials shown are determined by the equipment noted and accuracy of the "log of materials" is limited thereby and by judgement of the operator. THIS INFORMATION IS FOR DESIGN PURPOSES ONLY.

LETTER BOREHOLE - MODOT_20151118.GDT - 1/13/25 08:57 - G:\PROJECT FILES\2024\MG24029 I-270 GAP FROM ROUTE 367 TO LILAC AVENUE\FIELD DATA\ROUTE 367\I-270 ROUTE 367 MODOT GINT LOGS.GPJ

STATE OF MISSOURI
RYAN DAVID SHAW
NUMBER PE-2017002368
PROFESSIONAL ENGINEER
THIS SHEET HAS BEEN SIGNED, SEALED AND DATED ELECTRONICALLY

DATE PREPARED 4/1/2026
ROUTE I-270 | STATE MO
DISTRICT BR | SHEET NO. 41
COUNTY ST. LOUIS
JOB NO. JSL0021
CONTRACT ID.
PROJECT NO.
BRIDGE NO. A9490

DESCRIPTION | DATE

MISSOURI HIGHWAYS AND TRANSPORTATION COMMISSION
105 WEST CAPITOL
JEFFERSON CITY, MO 65102
1-888-ASK-MODOT (1-888-275-6636)

HDR Engineering, Inc.
1001 Highlands Plaza Drive
Suite 200
St. Louis, MO 63110
314-425-8300
Certificate of Authority: 000856

BORING DATA

Note: For location of borings, see Sheet No. 1.

Detailed September 2025
Checked September 2025

Note: This drawing is not to scale. Follow dimensions.

c:\pwworking\central01\d4975495\B_A9490_041_SL0021.dgn 3:58:59 PM 4/1/2026

Missouri Department of Transportation
Construction and Materials

BORING NO. A9490-301
Page 1 of 3

Job No.: MG24029 **County:** St. Louis **Route:** Route 367
Design: **Skew:** **Location:** St. Louis County, Missouri
Bent: **Logged By:** B. Nepal **Operator:** G. Shetley
Station: **Northing:** 1069738.059 **Date of Work:** 05/17/24-05/17/24
Offset: **Easting:** 894788.548 **Depth to Water:** 18.0
Elevation: 552.4 **Requested Northing:** **Depth Hole Open:**
Requested Station: **Requested Easting:** **Time Change:**
Requested Offset: **Equipment:** CME 750Y ,Split-Spoon Sampler, Shelby Tube, NQ
Requested Elevation: **Location Note:**
Drill No.: UES **Hammer Efficiency:** 95% **Drilling Method:** Hollow Stem Auger

Depth (ft)	Graphic	Description	Elevation (ft)	Sample Type	REC % (RQD %)	Blow Counts (N_{60})	Shear Data	Field Tests	Incex Tests
0		0.0-0.5' ASPHALT (6")							
		0.5-1.0' CONCRETE (6")							
		1.0-17.0' Grey and brown, lean CLAY (CL)	550						
5				X	72	6-2-3 (8)		PP = 1.50 tsf	MC = 25.7%
		7.0' - grey below 7 ft.	545						
10					8				
			540						
15					0				
		17.0-32.0' Grey and brown, lean to fat CLAY (CL-CH), with fine sand and trace rock fragments	535						
20				X	67	6-4-4 (13)		PP = 1.25 tsf	MC = 22.3%
		22.0' - trace mottled black below 22 ft.	530						
25				X	22	6-4-5 (14)		PP = 0.50 tsf	MC = 28.2%
		27.0' - with sand seams below 27 ft.	525						
30				X	100	3-4-5 (14)		PP = 3.00 tsf	MC = 26.7%
		32.0-37.0' Grey and brown, lean CLAY (CL), trace fine sand	520						
35				X	100	2-2-2 (6)		PP = 0.50 tsf	MC = 30.6%

N_{60} = (Em/60)Nm N_{60} - Corrected N value for standard 60% SPT efficiency; Em - Measured hammer efficiency in percent; Nm - Observed N-value; (1) = Assumed, (2) = Actual

Coordinate System: **Coordinate Zone:** **Coordinate Proj. Factor:**
Coordinate Datum: **Coordinate Units:** U.S. Survey Feet

* Persons using this information are cautioned that the materials shown are determined by the equipment noted and accuracy of the "log of materials" is limited thereby and by judgement of the operator. THIS INFORMATICN IS FOR DESIGN PURPOSES ONLY.

LETTER BOREHOLE - MODOT_20151118.GDT - 1/13/25 08:57 - G:\PROJECT FILES\2024\MG24029 I-270 GAP FROM ROUTE 367 TO LILAC AVENUE\FIELD DATA\ROUTE 367\I-270 ROUTE 367 MODOT GINT LOGS.GPJ

Missouri Department of Transportation
Construction and Materials

BORING NO. A9490-301
Page 2 of 3

Job No.: MG24029 **County:** St. Louis **Route:** Route 367
Design: **Skew:** **Location:** St. Louis County, Missouri
Bent: **Logged By:** B. Nepal **Operator:** G. Shetley
Station: **Northing:** 1069738.059 **Date of Work:** 05/17/24-05/17/24
Offset: **Easting:** 894788.548 **Depth to Water:** 18.0
Elevation: 552.4 **Requested Northing:** **Depth Hole Open:**
Requested Station: **Requested Easting:** **Time Change:**
Requested Offset: **Equipment:** CME 750Y ,Split-Spoon Sampler, Shelby Tube, NQ
Requested Elevation: **Location Note:**
Drill No.: UES **Hammer Efficiency:** 95% **Drilling Method:** Hollow Stem Auger

Depth (ft)	Graphic	Description	Elevation (ft)	Sample Type	REC % (RQD %)	Blow Counts (N_{60})	Shear Data	Field Tests	Incex Tests
35		32.0-37.0' Grey and brown, lean CLAY (CL), trace fine sand *(continued)*							
		37.0-62.0' Grey, fat CLAY (CH), trace fine sand	515						
40				X	100	2-3-4 (11)		PP = 2.00 tsf	MC = 36.5%
			510						
45				X	100	3-3-4 (11)		PP = 2.00 tsf	MC = 31.0%
		47.0' - greenish grey below 47 ft.	505						
50				X	100	2-3-5 (13)		PP = 2.00 tsf	MC = 32.0%
		52.0' - brown, trace mottled black below 52 ft.	500						
55				X	100	2-2-3 (8)		PP = 0.50 tsf	MC = 37.6%
		57.0' - grey and brown, trace fine gravel below 57 ft.	495						
60				X	100	4-6-7 (21)		PP = 3.00 tsf	MC = 22.0%
		62.0-64.0' Brown Weathered SHALE	490						
				X	100	50/0.4"			MC = 17.5%
65		64.0-66.0' Brown, sandy SHALE AND SILTSTONE, moderately weathered, soft, very finely crystalline to aphanitic, slightly to moderately fractured							
		64.5' - compressive strength = 1,820 psi	485		98 (68)				
70		66.0-74.0' Grey, SANDSTONE AND SILTSTONE, moderately weathered, moderately hard							

N_{60} = (Em/60)Nm N_{60} - Corrected N value for standard 60% SPT efficiency; Em - Measured hammer efficiency in percent; Nm - Observed N-value; (1) = Assumed, (2) = Actual

Coordinate System: **Coordinate Zone:** **Coordinate Proj. Factor:**
Coordinate Datum: **Coordinate Units:** U.S. Survey Feet

* Persons using this information are cautioned that the materials shown are determined by the equipment noted and accuracy of the "log of materials" is limited thereby and by judgement of the operator. THIS INFORMATION IS FOR DESIGN PURPOSES ONLY.

LETTER BOREHOLE - MODOT_20151118.GDT - 1/13/25 08:57 - G:\PROJECT FILES\2024\MG24029 I-270 GAP FROM ROUTE 367 TO LILAC AVENUE\FIELD DATA\ROUTE 367\I-270 ROUTE 367 MODOT GINT LOGS.GPJ

RYAN DAVID SHAW
NUMBER PE-2011000368
PROFESSIONAL ENGINEER
STATE OF MISSOURI
THIS SHEET HAS BEEN SIGNED, SEALED AND DATED ELECTRONICALLY

DATE PREPARED 4/1/2026
ROUTE I-270 | STATE MO
DISTRICT BR | SHEET NO. 42
COUNTY ST. LOUIS
JOB NO. JSL0021
CONTRACT ID.
PROJECT NO.
BRIDGE NO. A9490

DESCRIPTION | DATE

MISSOURI HIGHWAYS AND TRANSPORTATION COMMISSION
105 WEST CAPITOL
JEFFERSON CITY, MO 65102
1-888-ASK-MODOT (1-888-275-6636)

HDR Engineering, Inc.
1001 Highlands Plaza Drive
Suite 200
St. Louis, MO 63110
314-425-8300
Certificate of Authority: 000856

BORING DATA

Note: For location of borings, see Sheet No. 1.

Detailed September 2025
Checked September 2025

Note: This drawing is not to scale. Follow dimensions.

c:\pwworking\central01\d4975495\B_A9490_042_SL0021.dgn 4:00:19 PM 4/1/2026

Missouri Department of Transportation
Construction and Materials

BORING NO. A9490-301
Page 3 of 3

Job No.: MG24029 **County:** St. Louis **Route:** Route 367
Design: **Skew:** **Location:** St. Louis County, Missouri
Bent: **Logged By:** B. Nepal **Operator:** G. Shetley
Station: **Northing:** 1069738.059 **Date of Work:** 05/17/24-05/17/24
Offset: **Easting:** 894788.548 **Depth to Water:** 18.0
Elevation: 552.4 **Requested Northing:** **Depth Hole Open:**
Requested Station: **Requested Easting:** **Time Change:**
Requested Offset: **Equipment:** CME 750Y ,Split-Spoon Sampler, Shelby Tube, NQ
Requested Elevation: **Location Note:**
Drill No.: UES **Hammer Efficiency:** 95% **Drilling Method:** Hollow Stem Auger

Depth (ft)	Graphic	Description	Elevation (ft)	Sample Type	REC % (RQD %)	Blow Counts (N_{60})	Shear Data	Field Tests	Incex Tests
70		65.0-74.0' Grey, SANDSTONE AND SILTSTONE, moderately weathered, moderately hard *(continued)*	480		98 (83)				
		Refusal at 63.9 feet. Bottom of borehole at 74.0 feet.							

N_{60} = (Em/60)Nm N_{60} - Corrected N value for standard 60% SPT efficiency; Em - Measured hammer efficiency in percent; Nm - Observed N-value; (1) = Assumed, (2) = Actual

Coordinate System: **Coordinate Zone:** **Coordinate Proj. Factor:**
Coordinate Datum: **Coordinate Units:** U.S. Survey Feet

* Persons using this information are cautioned that the materials shown are determined by the equipment noted and accuracy of the "log of materials" is limited thereby and by judgement of the operator. THIS INFORMATION IS FOR DESIGN PURPOSES ONLY.

LETTER BOREHOLE - MODOT_20151118.GDT - 1/13/25 08:57 - G:\PROJECT FILES\2024\MG24029 I-270 GAP FROM ROUTE 367 TO LILAC AVENUE\FIELD DATA\ROUTE 367\I-270 ROUTE 367 MODOT GINT LOGS.GPJ

BORING DATA

Note: For location of borings, see Sheet No. 1.

Detailed September 2025
Checked September 2025

Note: This drawing is not to scale. Follow dimensions.

Sheet No. 43 of 43

STATE OF MISSOURI
RYAN DAVID SHAW
NUMBER PE-2017002388
PROFESSIONAL ENGINEER
THIS SHEET HAS BEEN SIGNED, SEALED AND DATED ELECTRONICALLY

DATE PREPARED 4/1/2026
ROUTE I-270 | STATE MO
DISTRICT BR | SHEET NO. 43
COUNTY ST. LOUIS
JOB NO. JSL0021
CONTRACT ID.
PROJECT NO.
BRIDGE NO. A9490

DESCRIPTION | DATE

MISSOURI HIGHWAYS AND TRANSPORTATION COMMISSION
105 WEST CAPITOL
JEFFERSON CITY, MO 65102
1-888-ASK-MODOT (1-888-275-6636)

HDR Engineering, Inc.
1001 Highlands Plaza Drive
Suite 200
St. Louis, MO 63110
314-425-8300
Certificate of Authority: 000856

c:\pwworking\central01\d4975495\B_A9490_043_SL0021.dgn 4:01:34 PM 4/1/2026

SEC/SUR 33 TWP 47 N RGE 7E

226.5' MECHANICALLY STABILIZED EARTH (MSE) RETAINING WALL SYSTEM

BM #5 - CUT SQUARE ON CONC BASE OF DOUBLE POST SIGN; SOUTH OF I-270, ALSO BEING ON THE WEST SIDE OF ROUTE 367
ELEV= 558.50
NAVD - 88

BM #6 - CUT SQUARE ON CONC PAD FOR AREA INLET; JUST NORTH OF I-270, ALSO BEING ON THE WEST SIDE OF ROUTE 367
ELEV= 550.30
NAVD - 88

Indicates location of borings.

Notes:
For General Notes, Estimated Quantities and Location Sketch, see Sheet No. 2.

For locations and mounting details of Underpass Lighting, see Roadway Plans.

Notice and Disclaimer Regarding Boring Log Data

The locations of all subsurface borings for this structure are shown on the plan sheet for this structure. The boring data for all locations indicated, as well as any other boring logs or other factual records of subsurface data and investigations performed by the department for the design of the project, are shown on Sheets No. 4 thru 10 and may be included in the Electronic Bridge Deliverables. They will also be available from the Project Contact upon written request. No greater significance or weight should be given to the boring data depicted on the plan sheets than is given to the subsurface data available from the district elsewhere.

The Commission does not represent or warrant that any such boring data accurately depicts the conditions to be encountered in constructing this project. A contractor assumes all risks it may encounter in basing its bid prices, time or schedule of performance on the boring data depicted here or those available from the district, or on any other documentation not expressly warranted, which the contractor may obtain from the Commission.

(*) Wall contractor shall show the following items on the design drawings and/or on the fabricator shop drawings.

1. Leveling pad horizontal.
2. Leveling pad length and step elevations shall be based on wall manufacturer's recommendation. Top of leveling pad elevations shall not be higher than the theoretical top of leveling pad elevations shown on these plans.

(**) Location and design of Construction Phasing Joint to be determined by the Contractor and MSE Wall designer.

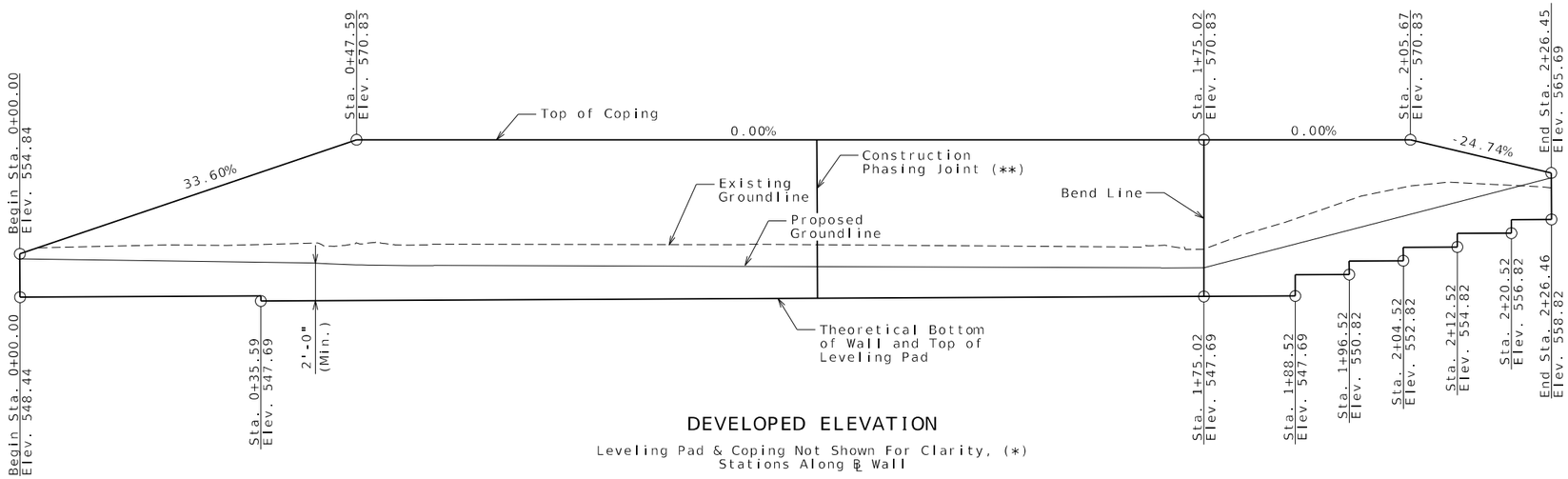

DEVELOPED ELEVATION

Leveling Pad & Coping Not Shown For Clarity, (*)
Stations Along ℄ Wall

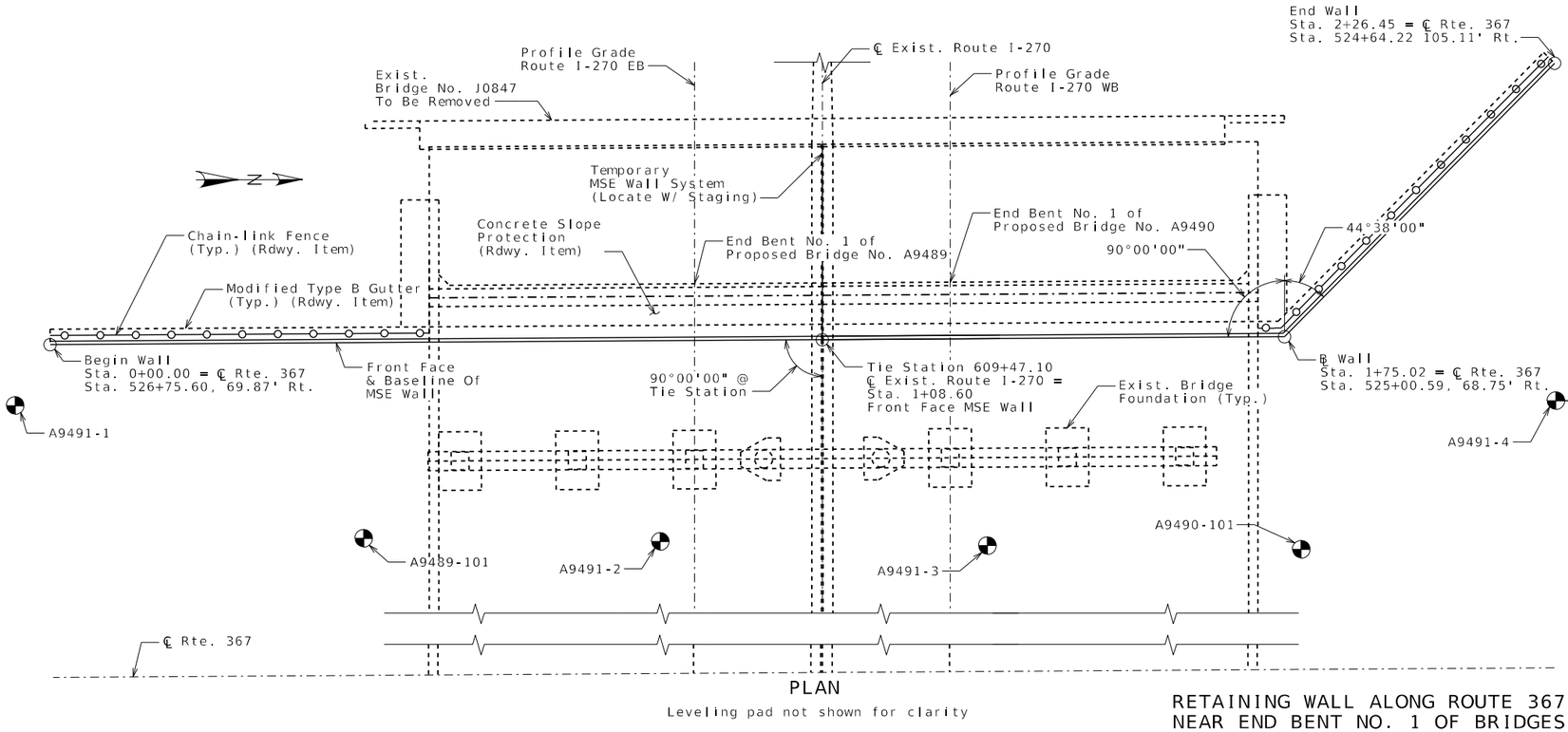

PLAN

Leveling pad not shown for clarity

RETAINING WALL ALONG ROUTE 367 NEAR END BENT NO. 1 OF BRIDGES NO. A9489 and A9490

ROUTE I-270 FROM ROUTE AC TO ROUTE H

ABOUT 1.5 MILES EAST OF ROUTE AC

BEGINNING STATION 0+00.00

Designed October 2025
Detailed October 2025
Checked October 2025

Note: This drawing is not to scale. Follow dimensions.

RYAN DAVID SHAW
NUMBER PE-2017002388
STATE OF MISSOURI
PROFESSIONAL ENGINEER
THIS SHEET HAS BEEN SIGNED, SEALED AND DATED ELECTRONICALLY

DATE PREPARED 3/27/2026
ROUTE I-270 | STATE MO
DISTRICT BR | SHEET NO. 1
COUNTY ST. LOUIS
JOB NO. JSL0021
CONTRACT ID.
PROJECT NO.
BRIDGE NO. A9491

DESCRIPTION | DATE

MISSOURI HIGHWAYS AND TRANSPORTATION COMMISSION
105 WEST CAPITOL
JEFFERSON CITY, MO 65102
1-888-ASK-MODOT (1-888-275-6636)

HDR Engineering, Inc.
1001 Highlands Plaza Drive
Suite 200
St. Louis, MO 63110-1390
314-425-8300
Certificate of Authority: 000856

General Notes:

Design Specifications:

2020 AASHTO LRFD Bridge Design Specifications (9th Ed.)
2023 AASHTO Guide Specifications for LRFD Seismic Bridge Design (3rd Ed.)
Seismic Design Category = B (Seismic Zone - 2) (Seismic Analysis)
Design earthquake response spectral acceleration coefficient at 1.0 second period, S_{D1} = 0.219
Acceleration Coefficient (effective peak ground acceleration coefficient), A_S = 0.229

Design Loading:

Lightweight Cellular Concrete = 36 lb/cf (max.), High Strength Material (see Job Special Provisions)

For strength limit state and extreme event limit state, the wall designer to confirm that the minimum Capacity to Demand Ratio (CDR) for bearing, sliding, overturning, eccentricity, and internal stability is greater than or equal to 1.0. MSE wall designer shall include this note on shop drawings.

For Extreme Event I limit state, the wall designer shall design wall for γEQ = 0.5

Φb = 25° and Unit weight, γb = 120 pcf for retained backfill material to be retained by the mechanically stabilized earth wall system.

Φ_f = 25° for unimproved foundation ground where wall is to bear.

For unimproved foundation ground, factored bearing resistance is 3.3 ksf for strength limit state and factored bearing resistance is 4.6 ksf for extreme event limit state.

The maximum applied factored bearing stress for the strength and extreme event limit state(s) at the foundation level shall be shown on the shop drawings and shall be less than the factored bearing resistance.

Factored bearing resistance shall be used as shown on the plans. No adjustments are allowed.

Contractor shall include design Φr (actual $\Phi r \geq 34°$) and the total unit weight, γr, for the select granular backfill (wedge area backfill) for structural systems on shop drawings. Contractor shall identify source of select granular backfill material, submit proctor in accordance with AASHTO T 99 (ASTM D698) and gradation with the shop drawings. When backfill material is too coarse to develop a proctor curve the contractor shall determine the maximum dry density (relative density) in accordance with ASTM D4253 and ASTM D4254 and assume percent passing the 200 sieve for optimum water content.

Total unit weight, γr = (95% compaction) x (maximum dry density) x (1 + optimum water content)

Design Φr = 34°for the select granular backfill (reinforced backfill) for structural systems.

Seismic analysis provisions shall not be ignored for MSE wall design.

Use default values for the pullout friction factor, F*, in accordance with LRFD figure 11.10.6.3.2-2 and default value for scale effect correction factor, α, in accordance with LRFD table 11.10.6.3.2-1. For approved steel strips not shown in LRFD figure 11.10.6.3.2-2, use F* ≤ 2.0 at zero depth and F* ≤ Tan Φr at 20 feet depth and Φr design = 34°. F* and α values shall be shown on the shop drawings.

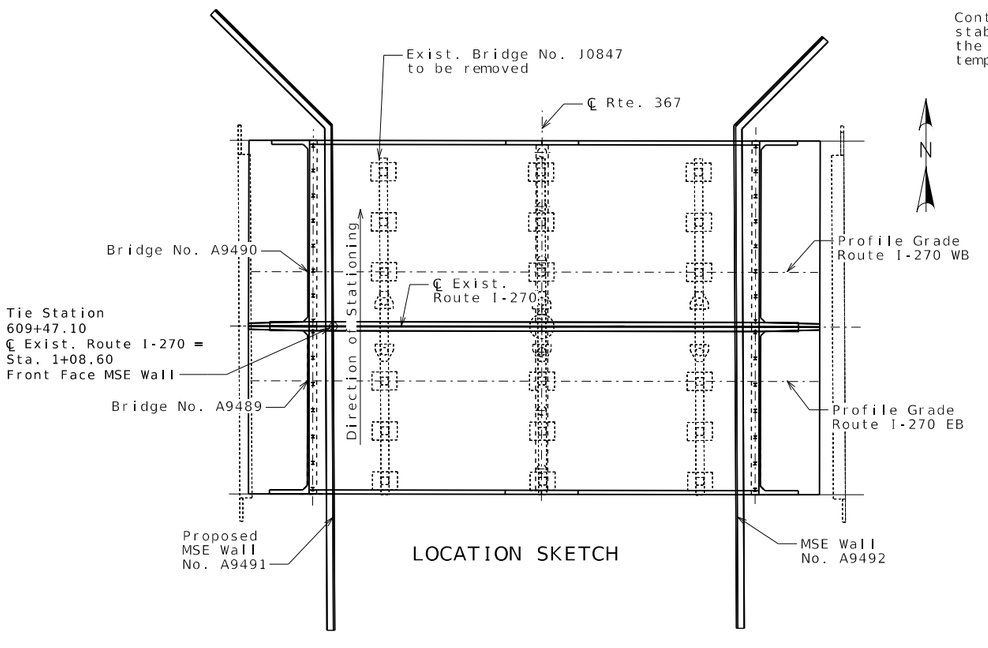

LOCATION SKETCH

Design Unit Stresses:

All concrete for leveling pad and coping shall be Class B or B-1 with f'c = 4000 psi.

The minimum compressive strength of concrete for precast modular panel shall be 4,000 psi in accordance with Sec 1052.

Excavation:

Excavation quantities and pay items are given on the roadway plans. Excavation quantities are based on a soil reinforcement length of 0.75H, where H is the overall wall height in feet and includes the two feet of added embedment. The soil reinforcement length may vary based upon the wall design selected by the contractor. Plan excavation quantities will be paid regardless of any actual quantities removed based on the soil reinforcement length and design selected.

The MSE wall system shall be built vertical.

The MSE wall system shall be built in accordance with Sec 720.

The MSE wall system shall be a precast modular panel wall system.

Precast modular panel, drycast modular block, wetcast modular block and coping (or capstone) reinforcement shall be epoxy coated.

A filter cloth meeting the requirements for a Separation Geotextile material shall be placed between the select granular backfill for structural systems and the backfill being retained by the mechanically stabilized earth wall system.

Coping shall be required on this structure. When CIP coping sections extend beyond the limits of a single panel, bond breaker (roofing felt or other approved alternate) between wall panel and coping is required. Coping joints shall use 3/4-inch chamfers and shall be sealed with 3/4-inch joint filler. Coping reinforcement shall terminate 1 1/2-inch minimum from face of coping joint.

The contractor shall be solely responsible to coordinate construction of the wall with bridge and roadway construction and ensure that the bridge and roadway construction, resulting or existing obstructions, shall not impact the construction or performance of the wall. Soil reinforcement shall be designed and placed to avoid damage by pile driving, guardrail post installation, utility and sign foundations. (See Roadway and Bridge plans.)

Minimum 18" wide geotextile strips shall be centered at vertical and horizontal joints of panel. Geotextile material shall be adhered to back face of panel using an adhesive compound supplied by the manufacturer. All edges of each fabric strip shall provide a positive seal. A minimum 12" overlap shall be provided between spliced filter fabric.

Aluminized soil reinforcement shall have edges coated with coating material per manufacturer.

Soil reinforcement shall be spaced to avoid roadway drop inlet behind wall.

Upper two layers of soil reinforcement shall be extended 3 feet beyond the lower layers when wall height is greater than or equal to 10 feet.

All steel soil reinforcements shall be separated from other metallic elements by at least 3 inches.

The splay angle should be less than 15° and tensile capacity of splayed reinforcement shall be reduced by the cosine of the splay angle. Soil reinforcement shall clear the obstruction by at least 3 inches.

No reinforcement shall be left unconnected to the wall face or arbitrarily cut/bent in the field to avoid the obstruction.

Where interference between the vertical obstruction and the soil reinforcement is unavoidable, the design of the wall near the obstruction may be modified using one of the alternatives in FHWA-NHI-10-024, Section 5.4.2. Show detail layout on the drawings. For wall designs with horizontal obstructions in reinforced soil mass, see FHWA-NHI-10-024, Section 5.4.3.

Contractor shall be responsible for the internal stability, external stability, compound stability, and overall global stability of the MSE wall structure. The soil parameters assumed for the temporary MSE wall design shall be those shown on the plan details for the MSE wall and shown in the foundation report. The contractor shall submit the proposed method of temporary MSE wall construction to the engineer prior to beginning work. See specisl provisions.

Estimated Quantities

Item		Total
Aesthetic Concrete Stain	lump sum	1
Temporary MSE Wall System	lump sum	1
Mechanically Stabilized Earth Wall Systems with Lightweight Fill	sq. foot	4517

MSE Wall Systems Data Table

Proprietary Wall Systems		Combination Wall Systems			
Manufacturer	System	Facing Unit Manufacturer	Facing Unit	Geogrid Manufacturer	Geogrid

MSE Wall Systems Data Table is to be completed by MoDOT construction personnel to record the manufacturer of the proprietary wall system or the manufacturers of the combination wall system that was used for constructing the MSE wall.

RYAN DAVID SHAW
NUMBER PE-2017003268
STATE OF MISSOURI
PROFESSIONAL ENGINEER
THIS SHEET HAS BEEN SIGNED, SEALED AND DATED ELECTRONICALLY

DATE PREPARED 3/27/2026
ROUTE I-270 | STATE MO
DISTRICT BR | SHEET NO. 2
COUNTY ST. LOUIS
JOB NO. JSL0021
CONTRACT ID.
PROJECT NO.
BRIDGE NO. A9491

DATE	DESCRIPTION

MISSOURI HIGHWAYS AND TRANSPORTATION COMMISSION
105 WEST CAPITOL
JEFFERSON CITY, MO 65102
1-888-ASK-MODOT (1-888-275-6636)
HDR Engineering, Inc.
1001 Highlands Plaza Drive
Suite 200
St. Louis, MO 63110-1390
314-425-8300
Certificate of Authority: 000856

Detailed October 2025
Checked October 2025

Note: This drawing is not to scale. Follow dimensions.

c:\pwworking\central01\d4975496\B_A9491_002_SL0021.dgn 10:56:06 AM 3/27/2026

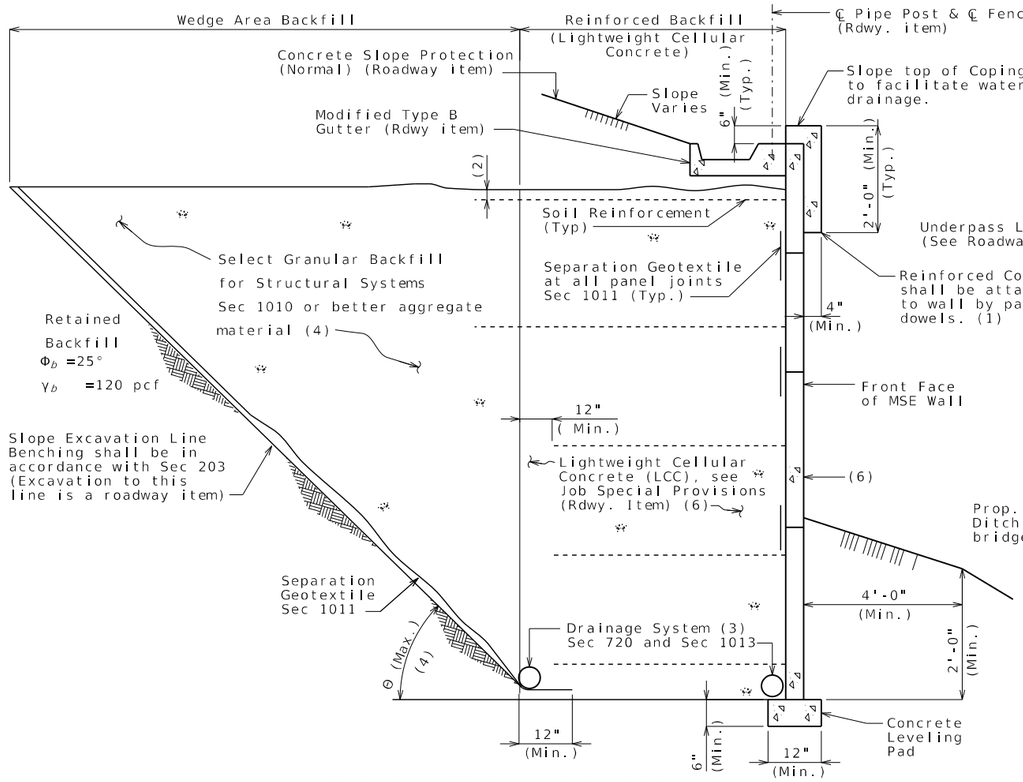

TYPICAL SECTION THRU PRECAST MODULAR PANEL WALL (GENERAL)

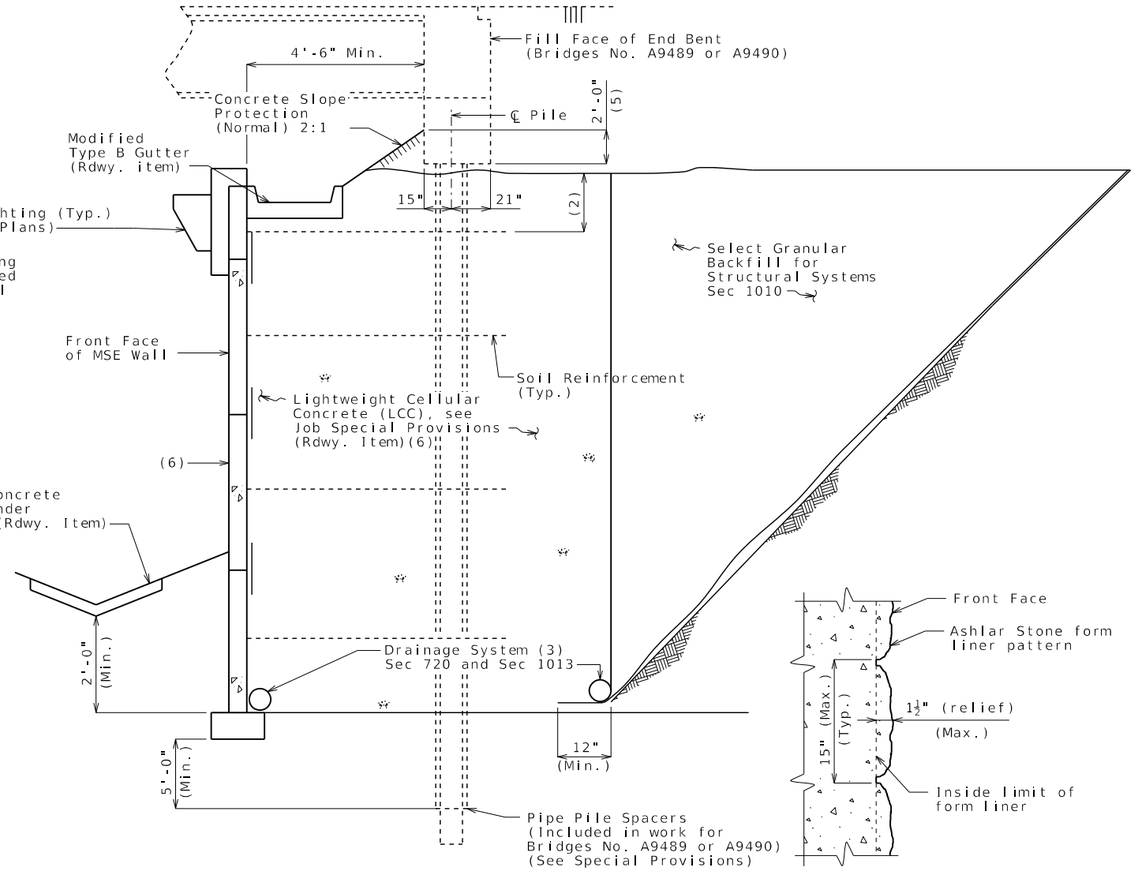

TYPICAL SECTION THRU PRECAST MODULAR PANEL WALL UNDER BRIDGE

FORM LINER DETAIL (PRECAST MODULAR PANEL WALL)

(4) Where the angle, Θ, between the retained backfill excavation/fill line and the horizontal is less than 90°, the wedge area backfill between Θ and 90° shall be filled with select granular backfill for structural systems meeting the requirements of Section 1010.

- For 45° < Θ ≤ 90°, properties for retained backfill shall be used for active force computations.

- For Θ ≤ 45°, contractor shall have the option to use select granular backfill, Φ_r, or better aggregate material for active force computations in the wedge area backfill. For active force computations, the angle of internal friction for wedge area backfill material, Φ_r, shall be limited to 34° unless determined otherwise in accordance with Section 1010. If $\Phi_r > 34°$ is desired for wedge area backfill then test report shall be submitted with manufacturer's design plans. Φ_r shall not be greater than 40°. Final configuration of this option shall be sent to Geotechnical Section for a new overall global stability analysis. Design Φ_r° shall be shown on manufacturer's plans if used.

The slope excavation line shall be benched and separation geotextile shall be placed between the retained backfill and either select granular backfill or better aggregate material, and between the select granular backfill and better aggregate material.

Show range of acceptable theta (Θ) angle on shop drawings which must be consistent with design computations and proposed construction of wall. Show active force computation properties ($\Phi° = \Phi_r°$ and $\gamma = \gamma_r$ or $\Phi° = \Phi_b°$ and $\gamma = \gamma_b$) on shop drawings and in design computations. Coordination between wall designer (manufacturer) and contractor is required before shop drawing submittal.

Material Properties Used in Design						
Reinf. Fill/Select Granular Backfill			Active Force Computations			Foundation
Φ_r°	γ_r (pcf)		Φ°	γ (pcf)		Φ_f°

MSE Wall designer shall include table on shop drawings and provide values used in the design computations. Effects of cohesion shall be ignored unless approved by the engineer.

Notes for Form Liners:

The cost of form liners for MSE wall systems,complete in place, will be considered completely covered by the contract unit price for Mechanically Stabilized Earth Wall System.

Form liner shall be constructed in accordance with Special Provisions.

Form liner pattern shall be 'Ashlar Stone'. Manufacturer and form liner pattern shall be approved by the engineer prior to construction.

Note: For additional information, see Typical Section Thru Precast Modular Panel Wall (General).

(1) Inverted U-shape reinforced capstone may be used in lieu of coping. Panel dowels for level-up concrete shall be required, and provided by manufacturer. The dowels shall be field trimmed to clear the capstone by a minumum of 1 1/2 inches and a maximum of 2 1/2 inches.

(2) Topmost layer of reinforcement shall be fully covered with select granular backfill for structural systems, as approved by the wall manufacturer, before placement of the Separation Geotextile.

(3) Minimum 6" diameter perforated PVC or PE pipe.

Manufacturer shall show drain details on design plans to be submitted as shown on MoDOT MSE wall plans and/or roadway plans.

Contractor shall modify the drain details as shown if it will improve flow as may be the case for stepped leveling pad, and for an uneven ground line (approval of the engineer required).

(5) See bridge plans.

(6) Aesthetic Concrete Stain. See special provisions.

DETAILS FOR GENERIC MSE WALL

Detailed October 2025
Checked October 2025

Note: This drawing is not to scale. Follow dimensions.

RYAN DAVID SHAW
NUMBER PE-2017003288
STATE OF MISSOURI
PROFESSIONAL ENGINEER
THIS SHEET HAS BEEN SIGNED, SEALED AND DATED ELECTRONICALLY

DATE PREPARED 3/27/2026
ROUTE I-270 | STATE MO
DISTRICT BR | SHEET NO. 3
COUNTY ST. LOUIS
JOB NO. JSL0021
CONTRACT ID.
PROJECT NO.
BRIDGE NO. A9491

DESCRIPTION | DATE

MISSOURI HIGHWAYS AND TRANSPORTATION COMMISSION
105 WEST CAPITOL
JEFFERSON CITY, MO 65102
1-888-ASK-MODOT (1-888-275-6636)

HDR Engineering, Inc.
1001 Highlands Plaza Drive
Suite 200
St. Louis, MO 63110-1390
314-425-8300
Certificate of Authority: 000856

Missouri Department of Transportation
Construction and Materials

BORING NO. A9491-1
Page 1 of 2

Job No.: MG24029 **County:** St. Louis **Route:** Route 367
Design: **Skew:** **Location:** St. Louis County, Missouri
Bent: **Logged By:** B. Nepal **Operator:** G. Shetley
Station: **Northing:** 1069559.013 **Date of Work:** 05/21/24-05/21/24
Offset: **Easting:** 894690.356 **Depth to Water:** 14.0
Elevation: 552.4 **Requested Northing:** **Depth Hole Open:**
Requested Station: **Requested Easting:** **Time Change:**
Requested Offset: **Equipment:** CME 750Y ,Split-Spoon Sampler, Shelby Tube
Requested Elevation: **Location Note:**
Drill No.: UES **Hammer Efficiency:** 95% **Drilling Method:** Hollow Stem Auger

Depth (ft)	Graphic	Description	Elevation (ft)	Sample Type	REC % (RQD %)	Blow Counts (N_{60})	Shear Data	Field Tests	Index Tests
0		0.0-0.5' CONCRETE (6")							
		0.5-2.0' Sampling not available due to obstruction by boulder							
		2.0-22.0' Light grey and brown, lean CLAY (CL), with grey fine sand	550		100		Qu Test Results UCS = 2.44 ksf MC = 29.2% γ_{moist} = 127.5 pcf	PP = 2.00 tsf	MC = 29.2%
		4.0' - UU test performed at 4.0 ft.: shear strength = 0.74 tsf dry density = 97.4 pcf			100		Trixial Results MC = 25.7% γ_{moist} = 122.4 pcf	PP = 2.50 tsf	MC = 25.7%
5		6.0' - light brown lean clay, trace silt below 6 ft.	545		100		Qu Test Results UCS = 3.48 ksf MC = 25.1% γ_{moist} = 128.1 pcf	PP = 1.00 tsf	MC = 25.1%
					98		Qu Test Results UCS = 2.24 ksf MC = 26.3% γ_{moist} = 131.2 pcf	PP = 1.00 tsf	MC = 26.3%
10					100			PP = 2.50 tsf	
		12.0' - light grey and brown lean clay, trace silt below 12 ft.	540		98		Qu Test Results UCS = 2.12 ksf MC = 25.2% γ_{moist} = 125.1 pcf	PP = 2.00 tsf	MC = 25.2%
		14.0' - light brown below 14 ft.			100		Qu Test Results UCS = 2.08 ksf MC = 24.8% γ_{moist} = 131.74 pcf	PP = 1.00 tsf	MC = 24.8%
15		16.0' - brown and grey, mottled black below 16 ft.	535		100			PP = 2.00 tsf	
					100		Qu Test Results UCS = 2.48 ksf MC = 24.3% γ_{moist} = 125.84 pcf	PP = 0.50 tsf	MC = 24.3%
20									
		22.0-27.0' Light grey and brown, lean CLAY (CL)	530						
					100	6-8-7 (24)		PP = 3.50 tsf	MC = 18.3%
25									
		27.0-35.0' Brown and grey, fat CLAY (CH)	525						
30					100	3-5-6 (17)		PP = 3.50 tsf	MC = 22.4%

N_{60} = (Em/60)Nm N_{60} - Corrected N value for standard 60% SPT efficiency; Em - Measured hammer efficiency in percent; Nm - Observed N-value; (1) = Assumed, (2) = Actual

Coordinate System: **Coordinate Zone:** **Coordinate Proj. Factor:**
Coordinate Datum: **Coordinate Units:** U.S. Survey Feet

* Persons using this information are cautioned that the materials shown are determined by the equipment noted and accuracy of the "log of materials" is limited thereby and by judgement of the operator. THIS INFORMATION IS FOR DESIGN PURPOSES ONLY.

LETTER BOREHOLE - MODOT_20151118.GDT - 1/13/25 08:57 - G:\PROJECT FILES\2024\MG24029 I-270 GAP FROM ROUTE 367 TO LILAC AVENUE\FIELD DATA\ROUTE 367\L-270 ROUTE 367 MODOT GINT LOGS.GPJ

Missouri Department of Transportation
Construction and Materials

BORING NO. A9491-1
Page 2 of 2

Job No.: MG24029 **County:** St. Louis **Route:** Route 367
Design: **Skew:** **Location:** St. Louis County, Missouri
Bent: **Logged By:** B. Nepal **Operator:** G. Shetley
Station: **Northing:** 1069559.013 **Date of Work:** 05/21/24-05/21/24
Offset: **Easting:** 894690.356 **Depth to Water:** 14.0
Elevation: 552.4 **Requested Northing:** **Depth Hole Open:**
Requested Station: **Requested Easting:** **Time Change:**
Requested Offset: **Equipment:** CME 750Y ,Spit-Spoon Sampler, Shelby Tube
Requested Elevation: **Location Note:**
Drill No.: UES **Hammer Efficiency:** 95% **Drilling Method:** Hollow Stem Auger

Depth (ft)	Graphic	Description	Elevation (ft)	Sample Type	REC % (RQD %)	Blow Counts (N_{60})	Shear Data	Field Tests	Index Tests
30		27.0-35.0' Brown and grey, fat CLAY (CH) *(continued)*							
			520						
35					100	3-4-5 (14)		PP = 3.00 tsf	MC = 24.8%
		35.0-40.0' Light grey and brown, lean CLAY (CL)							
		37.0' - trace sand and gravel below 37 ft.	515						
40					100	4-7-8 (24)		PP = 3.50 tsf	MC = 15.1%
		Bottom of borehole at 40.0 feet.							

N_{60} = (Em/60)Nm N_{60} - Corrected N value for standard 60% SPT efficiency; Em - Measured hammer efficiency in percent; Nm - Observed N-value; (1) = Assumed, (2) = Actual

Coordinate System: **Coordinate Zone:** **Coordinate Proj. Factor:**
Coordinate Datum: **Coordinate Units:** U.S. Survey Feet

* Persons using this information are cautioned that the materials shown are determined by the equipment noted and accuracy of the "log of materials" is limited thereby and by judgement of the operator. THIS INFORMATION IS FOR DESIGN PURPOSES ONLY.

LETTER BOREHOLE - MODOT_20151118.GDT - 1/13/25 08:57 - G:\PROJECT FILES\2024\MG24029 I-270 GAP FROM ROUTE 367 TO LILAC AVENUE\FIELD DATA\ROUTE 367\L-270 ROUTE 367 MODOT GINT LOGS.GPJ

STATE OF MISSOURI
RYAN DAVID SHAW
NUMBER PE-2017003368
PROFESSIONAL ENGINEER
THIS SHEET HAS BEEN SIGNED, SEALED AND DATED ELECTRONICALLY

DATE PREPARED 3/27/2026
ROUTE I-270 | STATE MO
DISTRICT BR | SHEET NO. 4
COUNTY ST. LOUIS
JOB NO. JSL0021
CONTRACT ID.
PROJECT NO.
BRIDGE NO. A9491
DESCRIPTION
DATE

MISSOURI HIGHWAYS AND TRANSPORTATION COMMISSION
105 WEST CAPITOL
JEFFERSON CITY, MO 65102
1-888-ASK-MODOT (1-888-275-6636)

HDR Engineering, Inc.
1001 Highlands Plaza Drive
Suite 200
St. Louis, MO 63110-1390
314-425-8300
Certificate of Authority: 000856

BORING DATA

Note: For locations of borings, see Sheet No. 1.

Detailed October 2025
Checked October 2025

Note: This drawing is not to scale. Follow dimensions.

c:\pwworking\central01\d4975496\B_A9491_004_SL0021.dgn 10:56:21 AM 3/27/2026

Missouri Department of Transportation
Construction and Materials

BORING NO. A9489-101
Page 1 of 2

Job No.: MG24029 **County:** St. Louis **Route:** Route 367
Design: **Skew:** **Location:** St. Louis County, Missouri
Bent: **Logged By:** B. Nepal **Operator:** G. Shetley
Station: **Northing:** 1069608.162 **Date of Work:** 05/22/24-05/22/24
Offset: **Easting:** 894708.807 **Depth to Water:** 18.0
Elevation: 553.5 **Requested Northing:** **Depth Hole Open:**
Requested Station: **Requested Easting:** **Time Change:**
Requested Offset: **Equipment:** CME 750Y ,Split-Spoon Sampler, Shelby Tube, NQ
Requested Elevation: **Location Note:**
Drill No.: UES **Hammer Efficiency:** 95% **Drilling Method:** Hollow Stem Auger

Depth (ft)	Graphic	Description	Elevation (ft)	Sample Type	REC % (RQD %)	Blow Counts (N_{60})	Shear Data	Field Tests	Index Tests
0		0.0-0.5' ASPHALT (6.0")							
		0.5-1.0' CONCRETE (6.0")							
		1.0-17.0' Light grey and brown, lean CLAY (CL), mottled black	550				Qu Test Results UCS = 1.72 ksf MC = 27.6% γ_{moist} = 125.4 pcf		
5					100			PP = 3.50 tsf	LL = 37 PL = 22 MC = 27.6%
			545						
10					94	2-2-3 (8)		PP = 2.00 tsf	MC = 26.9%
			540						
15					100	2-2-3 (8)		PP = 1.50 tsf	MC = 24.0%
		17.0-22.0' Grey and brown, fat CLAY (CH)	535				Qu Test Results UCS = 2.36 ksf MC = 22.9% γ_{moist} = 127.35 pcf		
20					100			PP = 2.50 tsf	LL = 56 PL = 16 MC = 22.9%
		22.0-27.0' Grey and brown, lean CLAY (CL), with fine sand	530						
25					100	3-4-6 (16)		PP = 3.50 tsf	MC = 24.0%
		27.0-42.0' Light grey and brown, lean CLAY (CL), trace sand	525						
30					100	2-3-3 (10)		PP = 1.00 tsf	MC = 29.6%
			520						
35					100	2-3-4 (11)		PP = 2.50 tsf	MC = 28.3%

N_{60} = (Em/60)Nm N_{60} - Corrected N value for standard 60% SPT efficiency; Em - Measured hammer efficiency in percent; Nm - Observed N-value; (1) = Assumed, (2) = Actual

Coordinate System: **Coordinate Zone:** **Coordinate Proj. Factor:**
Coordinate Datum: **Coordinate Units:** U.S. Survey Feet

* Persons using this information are cautioned that the materials shown are determined by the equipment noted and accuracy of the "log of materials" is limited thereby and by judgement of the operator. THIS INFORMATION IS FOR DESIGN PURPOSES ONLY.

LETTER BOREHOLE - MODOT_20151118.GDT - 1/13/25 08:57 - G:\PROJECT FILES\2024\MG24029 I-270 GAP FROM ROUTE 367 TO LILAC AVENUE\FIELD DATA\ROUTE 367\L-270 ROUTE 367 MODOT GINT LOGS.GPJ

Missouri Department of Transportation
Construction and Materials

BORING NO. A9489-101
Page 2 of 2

Job No.: MG24029 **County:** St. Louis **Route:** Route 367
Design: **Skew:** **Location:** St. Louis County, Missouri
Bent: **Logged By:** B. Nepal **Operator:** G. Shetley
Station: **Northing:** 1069608.162 **Date of Work:** 05/22/24-05/22/24
Offset: **Easting:** 894708.807 **Depth to Water:** 18.0
Elevation: 553.5 **Requested Northing:** **Depth Hole Open:**
Requested Station: **Requested Easting:** **Time Change:**
Requested Offset: **Equipment:** CME 750Y ,Spit-Spoon Sampler, Shelby Tube, NQ
Requested Elevation: **Location Note:**
Drill No.: UES **Hammer Efficiency:** 95% **Drilling Method:** Hollow Stem Auger

Depth (ft)	Graphic	Description	Elevation (ft)	Sample Type	REC % (RQD %)	Blow Counts (N_{60})	Shear Data	Field Tests	Index Tests
35		27.0-42.0' Light grey and brown, lean CLAY (CL), trace sand *(continued)*	515						
40					100	2-3-3 (10)		PP = 1.25 tsf	MC = 33.6%
		42.0-47.0' Light grey and brown, lean to fat CLAY (CL-CH), trace sand	510						
45					100	4-7-8 (24)		PP = 3.50 tsf	MC = 16.4%
		47.0-49.0' Weathered SHALE	505						
50		49.0-59.0' Brown with orange and black, SANDSTONE AND SILTSTONE, moderately weathered, soft, very finely crystalline to aphanitic, slightly to moderately fractured			100	50/0.3'		PP = 3.00 tsf	MC = 15.5%
					100 (0)				
		53.3' - compressive strength = 1,356 psi	500		98 (55)				
55									
			495		100 (71)				
		Refusal at 48.9 feet. Bottom of borehole at 59.0 feet.							

N_{60} = (Em/60)Nm N_{60} - Corrected N value for standard 60% SPT efficiency; Em - Measured hammer efficiency in percent; Nm - Observed N-value; (1) = Assumed, (2) = Actual

Coordinate System: **Coordinate Zone:** **Coordinate Proj. Factor:**
Coordinate Datum: **Coordinate Units:** U.S. Survey Feet

* Persons using this information are cautioned that the materials shown are determined by the equipment noted and accuracy of the "log of materials" is limited thereby and by judgement of the operator. THIS INFORMATION IS FOR DESIGN PURPOSES ONLY.

LETTER BOREHOLE - MODOT_20151118.GDT - 1/13/25 08:57 - G:\PROJECT FILES\2024\MG24029 I-270 GAP FROM ROUTE 367 TO LILAC AVENUE\FIELD DATA\ROUTE 367\L-270 ROUTE 367 MODOT GINT LOGS.GPJ

STATE OF MISSOURI
RYAN DAVID SHAW
NUMBER PE-2017003268
PROFESSIONAL ENGINEER
THIS SHEET HAS BEEN SIGNED, SEALED AND DATED ELECTRONICALLY

DATE PREPARED 3/27/2026
ROUTE I-270 | STATE MO
DISTRICT BR | SHEET NO. 5
COUNTY ST. LOUIS
JOB NO. JSL0021
CONTRACT ID.
PROJECT NO.
BRIDGE NO. A9491

DESCRIPTION | DATE

MISSOURI HIGHWAYS AND TRANSPORTATION COMMISSION
105 WEST CAPITOL
JEFFERSON CITY, MO 65102
1-888-ASK-MODOT (1-888-275-6636)

HDR Engineering, Inc.
1001 Highlands Plaza Drive
Suite 200
St. Louis, MO 63110-1390
314-425-8300
Certificate of Authority: 000856

BORING DATA

Note: For locations of borings, see Sheet No. 1.

Detailed October 2025
Checked October 2025

Note: This drawing is not to scale. Follow dimensions.

c:\pwworking\central01\d4975496\B_A9491_005_SL0021.dgn 10:57:02 AM 3/27/2026

Missouri Department of Transportation
Construction and Materials

BORING NO. A9491-2
Page 1 of 2

Job No.: MG24029 **County:** St. Louis **Route:** Route 367
Design: **Skew:** **Location:** St. Louis County, Missouri
Bent: **Logged By:** J. Stauffer **Operator:** S. Conrad
Station: **Northing:** 1069649.905 **Date of Work:** 05/24/24-05/28/24
Offset: **Easting:** 894709.039 **Depth to Water:** 17.0
Elevation: 553.0 **Requested Northing:** **Depth Hole Open:**
Requested Station: **Requested Easting:** **Time Change:**
Requested Offset: **Equipment:** CME 55LC ,Split-Spoon Sampler, Shelby Tube
Requested Elevation: **Location Note:**
Drill No.: UES **Hammer Efficiency:** 79% **Drilling Method:** Hollow Stem Auger

Depth (ft)	Graphic	Description	Elevation (ft)	Sample Type	REC % (RQD %)	Blow Counts (N_{60})	Shear Data	Field Tests	Index Tests
0		0.0-0.4' ASPHALT (5") 0.4-0.8' CONCRETE (5") 0.8-1.2' BASEROCK (4")							
		1.2-11.0' Brown and grey, lean CLAY (CL), trace sand	550						
5				X	83	3-2-3 (7)		PP = 0.50 tsf	MC = 26.3%
			545						
10				X	100	2-3-3 (8)		PP = 1.50 tsf	MC = 26.7%
		11.0-17.0' Brown and grey, lean CLAY (CL)	540						
15				X	100	2-2-3 (7)		PP = 1.75 tsf	MC = 22.6%
		17.0-22.0' Brown and grey, fat CLAY (CH)	535						
20				X	100	3-5-5 (13)		PP = 1.50 tsf	MC = 23.7%
		22.0-26.5' Grey, sandy CLAY (CL)	530						
25				X	100	2-2-2 (5)		PP = 0.25 tsf	MC = 25.2%
		26.5-40.0' Brown and grey, fat CLAY (CH)	525						
30		28.0' - CU test performed at 28.0 ft.: average shear strength = 1.5 tsf dry density = 95.0 pcf		■	96		Trixial Results Phi' = 12° c' = 0.35 psf MC = 27.4%	PP = 1.00 tsf	LL = 56 PL = 21 MC = 27.4%
			520						
35				X	100	4-5-5 (13)		PP = 2.50 tsf	MC = 31.2%

N_{60} = (Em/60)Nm N_{60} - Corrected N value for standard 60% SPT efficiency; Em - Measured hammer efficiency in percent; Nm - Observed N-value; (1) = Assumed, (2) = Actual

Coordinate System: **Coordinate Zone:** **Coordinate Proj. Factor:**
Coordinate Datum: **Coordinate Units:** U.S. Survey Feet

* Persons using this information are cautioned that the materials shown are determined by the equipment noted and accuracy of the "log of materials" is limited thereby and by judgement of the operator. THIS INFORMATION IS FOR DESIGN PURPOSES ONLY.

Missouri Department of Transportation
Construction and Materials

BORING NO. A9491-2
Page 2 of 2

Job No.: MG24029 **County:** St. Louis **Route:** Route 367
Design: **Skew:** **Location:** St. Louis County, Missouri
Bent: **Logged By:** J. Stauffer **Operator:** S. Conrad
Station: **Northing:** 1069649.905 **Date of Work:** 05/24/24-05/28/24
Offset: **Easting:** 894709.039 **Depth to Water:** 17.0
Elevation: 553.0 **Requested Northing:** **Depth Hole Open:**
Requested Station: **Requested Easting:** **Time Change:**
Requested Offset: **Equipment:** CME 55LC ,Spit-Spoon Sampler, Shelby Tube
Requested Elevation: **Location Note:**
Drill No.: UES **Hammer Efficiency:** 79% **Drilling Method:** Hollow Stem Auger

Depth (ft)	Graphic	Description	Elevation (ft)	Sample Type	REC % (RQD %)	Blow Counts (N_{60})	Shear Data	Field Tests	Index Tests
35		26.5-40.0' Brown and grey, fat CLAY (CH) *(continued)* 36.0' - grey, trace oxidation below 36 ft.	515						
40				X	100	2-4-4 (11)		PP = 2.50 tsf	MC = 28.9%
		Bottom of borehole at 40.0 feet.							

N_{60} = (Em/60)Nm N_{60} - Corrected N value for standard 60% SPT efficiency; Em - Measured hammer efficiency in percent; Nm - Observed N-value; (1) = Assumed, (2) = Actual

Coordinate System: **Coordinate Zone:** **Coordinate Proj. Factor:**
Coordinate Datum: **Coordinate Units:** U.S. Survey Feet

* Persons using this information are cautioned that the materials shown are determined by the equipment noted and accuracy of the "log of materials" is limited thereby and by judgement of the operator. THIS INFORMATION IS FOR DESIGN PURPOSES ONLY.

LETTER BOREHOLE_MODOT_20151118.GDT - 1/13/25 08:57 - G:\PROJECT FILES\2024\MG24029 I-270 GAP FROM ROUTE 367 TO LILAC AVENUE\FIELD DATA\ROUTE 367\L-270 ROUTE 367 MODOT GINT LOGS.GPJ

RYAN DAVID SHAW
NUMBER PE-2011003268
PROFESSIONAL ENGINEER
STATE OF MISSOURI
THIS SHEET HAS BEEN SIGNED, SEALED AND DATED ELECTRONICALLY

DATE PREPARED 3/27/2026
ROUTE I-270 | STATE MO
DISTRICT BR | SHEET NO. 6
COUNTY ST. LOUIS
JOB NO. JSL0021
CONTRACT ID.
PROJECT NO.
BRIDGE NO. A9491

DESCRIPTION | DATE

MISSOURI HIGHWAYS AND TRANSPORTATION COMMISSION
105 WEST CAPITOL
JEFFERSON CITY, MO 65102
1-888-ASK-MODOT (1-888-275-6636)

HDR Engineering, Inc.
1001 Highlands Plaza Drive
Suite 200
St. Louis, MO 63110-1390
314-425-8300
Certificate of Authority: 000856

BORING DATA

Note: For locations of borings, see Sheet No. 1.

Detailed October 2025
Checked October 2025

Note: This drawing is not to scale. Follow dimensions.

c:\pwworking\central01\d4975496\B_A9491_006_SL0021.dgn 10:57:34 AM 3/27/2026

Missouri Department of Transportation
Construction and Materials

BORING NO. A9491-3
Page 1 of 2

Job No.: MG24029 **County:** St. Louis **Route:** Route 367
Design: **Skew:** **Location:** St. Louis County, Missouri
Bent: **Logged By:** J. Stauffer **Operator:** S. Conrad
Station: **Northing:** 1069695.958 **Date of Work:** 05/23/24-05/23/24
Offset: **Easting:** 894709.415 **Depth to Water:** 8.0
Elevation: 552.6 **Requested Northing:** **Depth Hole Open:**
Requested Station: **Requested Easting:** **Time Change:**
Requested Offset: **Equipment:** CME 55LC ,Split-Spoon Sampler, Shelby Tube
Requested Elevation: **Location Note:**
Drill No.: UES **Hammer Efficiency:** 79% **Drilling Method:** Hollow Stem Auger

Depth (ft)	Graphic	Description	Elevation (ft)	Sample Type	REC % (RQD %)	Blow Counts (N_{60})	Shear Data	Field Tests	Index Tests
0		0.0-0.4' ASPHALT (5.0")							
		0.4-0.8' CONCRETE (5.0")							
		0.8-1.3' CRUSHED LIMESTONE BASEROCK (6.0")	550						
		1.3-22.0' Brown and grey, lean CLAY (CL)			100		Trixial Results MC = 25.8% γ_{moist} = 120.7 pcf	PP = 1.50 tsf	MC = 25.8%
5		2.0' - UU test performed at 2.0 ft.: shear strength = 0.44 tsf dry density = 96.0 pcf			96			PP = 0.75 tsf	MC = 27.1%
		4.0' - CU test performed at 4.0 ft.: average shear strength = 0.75 tsf dry density = 94.9 pcf	545		100		Qu Test Results UCS = 1.12 ksf MC = 26.4% γ_{moist} = 128.3 pcf	PP = 1.00 tsf	LL = 41 PL = 20 MC = 26.4%
10					100		Trixial Results Phi' = 14° c' = 0 psf MC = 27.1%	PP = 2.00 tsf	
			540		100			PP = 1.25 tsf	
					96		Qu Test Results UCS = 0.760 ksf MC = 26.2%	PP = 2.00 tsf	MC = 21.7%
15		16.0' - UU test performed at 16.0 ft.: shear strength = 1.07 tsf dry density = 103.1 pcf			100		Qu Test Results UCS = 5.88 ksf MC = 21.7% γ_{moist} = 131.56 pcf	PP = 3.50 tsf	
			535		100		Trixial Results MC = 22.2% γ_{moist} = 126 pcf	PP = 0.75 tsf	MC = 22.2%
20					75			PP = 0.25 tsf	
		22.0-27.0' Brown and grey, sandy lean CLAY (CL)	530						
25					100	2-2-2 (5)		PP <0.25 tsf	MC = 26.6%
		27.0-40.0' Brown and grey, fat CLAY (CH)	525						
30					89	4-4-5 (12)		PP = 2.00 tsf	MC = 25.7%
			520						
35		33.5' - trace rock fragments below 33.5 feet			61	4-5-3 (11)		PP = 1.00 tsf	MC = 31.7%

N_{60} = (Em/60)Nm N_{60} - Corrected N value for standard 60% SPT efficiency; Em - Measured hammer efficiency in percent; Nm - Observed N-value; (1) = Assumed, (2) = Actual

Coordinate System: **Coordinate Zone:** **Coordinate Proj. Factor:**
Coordinate Datum: **Coordinate Units:** U.S. Survey Feet

* Persons using this information are cautioned that the materials shown are determined by the equipment noted and accuracy of the "log of materials" is limited thereby and by judgement of the operator. THIS INFORMATION IS FOR DESIGN PURPOSES ONLY.

LETTER BOREHOLE - MODOT_20151118.GDT - 1/13/25 08:57 - G:\PROJECT FILES\2024\MG24029 I-270 GAP FROM ROUTE 367 TO LILAC AVENUE\FIELD DATA\ROUTE 367\L-270 ROUTE 367 MODOT GINT LOGS.GPJ

Missouri Department of Transportation
Construction and Materials

BORING NO. A9491-3
Page 2 of 2

Job No.: MG24029 **County:** St. Louis **Route:** Route 367
Design: **Skew:** **Location:** St. Louis County, Missouri
Bent: **Logged By:** J. Stauffer **Operator:** S. Conrad
Station: **Northing:** 1069695.958 **Date of Work:** 05/23/24-05/23/24
Offset: **Easting:** 894709.415 **Depth to Water:** 8.0
Elevation: 552.6 **Requested Northing:** **Depth Hole Open:**
Requested Station: **Requested Easting:** **Time Change:**
Requested Offset: **Equipment:** CME 55LC ,Spit-Spoon Sampler, Shelby Tube
Requested Elevation: **Location Note:**
Drill No.: UES **Hammer Efficiency:** 79% **Drilling Method:** Hollow Stem Auger

Depth (ft)	Graphic	Description	Elevation (ft)	Sample Type	REC % (RQD %)	Blow Counts (N_{60})	Shear Data	Field Tests	Index Tests
35		27.0-40.0' Brown and grey, fat CLAY (CH) *(continued)*	515						
40					100	2-3-5 (11)		PP = 2.75 tsf	MC = 29.0%
		Bottom of borehole at 40.0 feet.							

N_{60} = (Em/60)Nm N_{60} - Corrected N value for standard 60% SPT efficiency; Em - Measured hammer efficiency in percent; Nm - Observed N-value; (1) = Assumed, (2) = Actual

Coordinate System: **Coordinate Zone:** **Coordinate Proj. Factor:**
Coordinate Datum: **Coordinate Units:** U.S. Survey Feet

* Persons using this information are cautioned that the materials shown are determined by the equipment noted and accuracy of the "log of materials" is limited thereby and by judgement of the operator. THIS INFORMATION IS FOR DESIGN PURPOSES ONLY.

LETTER BOREHOLE - MODOT_20151118.GDT - 1/13/25 08:57 - G:\PROJECT FILES\2024\MG24029 I-270 GAP FROM ROUTE 367 TO LILAC AVENUE\FIELD DATA\ROUTE 367\L-270 ROUTE 367 MODOT GINT LOGS.GPJ

STATE OF MISSOURI
RYAN DAVID SHAW
NUMBER PE-2017003368
PROFESSIONAL ENGINEER
THIS SHEET HAS BEEN SIGNED, SEALED AND DATED ELECTRONICALLY

DATE PREPARED 3/27/2026
ROUTE I-270 | STATE MO
DISTRICT BR | SHEET NO. 7
COUNTY ST. LOUIS
JOB NO. JSL0021
CONTRACT ID.
PROJECT NO.
BRIDGE NO. A9491

DESCRIPTION | DATE

MISSOURI HIGHWAYS AND TRANSPORTATION COMMISSION
105 WEST CAPITOL
JEFFERSON CITY, MO 65102
1-888-ASK-MODOT (1-888-275-6636)

HDR Engineering, Inc.
1001 Highlands Plaza Drive
Suite 200
St. Louis, MO 63110-1390
314-425-8300
Certificate of Authority: 000856

BORING DATA

Note: For locations of borings, see Sheet No. 1.

Detailed October 2025
Checked October 2025

Note: This drawing is not to scale. Follow dimensions.

c:\pwworking\central01\d4975496\B_A9491_007_SL0021.dgn 10:58:05 AM 3/27/2026

Missouri Department of Transportation
Construction and Materials

BORING NO. A9490-101
Page 1 of 3

Job No.: MG24029 **County:** St. Louis **Route:** Route 367
Design: **Skew:** **Location:** St. Louis County, Missouri
Bent: **Logged By:** B. Nepal **Operator:** G. Shetley
Station: **Northing:** 1069740.155 **Date of Work:** 05/23/24-05/23/24
Offset: **Easting:** 894709.716 **Depth to Water:** 23.0
Elevation: 552.4 **Requested Northing:** **Depth Hole Open:**
Requested Station: **Requested Easting:** **Time Change:**
Requested Offset: **Equipment:** CME 750Y ,Split-Spoon Sampler, Shelby Tube, NQ
Requested Elevation: **Location Note:**
Drill No.: UES **Hammer Efficiency:** 95% **Drilling Method:** Hollow Stem Auger

Depth (ft)	Graphic	Description	Elevation (ft)	Sample Type	REC % (RQD %)	Blow Counts (N_{60})	Shear Data	Field Tests	Index Tests
0		0.0-0.5' ASPHALT (6.0")							
		0.5-1.0' CONCRETE (6.0")							
		1.0-7.0' Brown, lean CLAY (CL)	550						
5				X	11	3-3-2 (8)			MC = 8.5%
		7.0-12.0' Brown, fat CLAY (CH), mottled black	545						
10				X	83	3-3-4 (11)		PP = 2.75 tsf	MC = 23.4%
		12.0-17.0' Light grey, lean CLAY (CL), trace gravel	540				Qu Test Results UCS = 4.52 ksf MC = 27.6% γ_{moist} = 129.05 pcf		
15				■	83			PP = 2.50 tsf	MC = 27.6%
		17.0-22.0' Brown, lean CLAY (CL), with sand	535						
20				X	100	2-2-3 (8)		PP = 0.25 tsf	MC = 25.7%
		22.0-27.0' Tan, clayey SAND (SC)	530						
25				X	100	1-0-0 (0)			MC = 33.9%
		27.0-32.0' Brown and grey, fat CLAY (CH), trace to with sand	525						
30				X	100	3-3-4 (11)		PP = 1.50 tsf	MC = 30.0%
		32.0-37.0' Brown and grey, lean CLAY (CL), trace sand	520						
35				X	100	2-2-4 (10)		PP = 0.50 tsf	MC = 21.7%

N_{60} = (Em/60)Nm N_{60} - Corrected N value for standard 60% SPT efficiency; Em - Measured hammer efficiency in percent; Nm - Observed N-value; (1) = Assumed, (2) = Actual

Coordinate System: **Coordinate Zone:** **Coordinate Proj. Factor:**
Coordinate Datum: **Coordinate Units:** U.S. Survey Feet

* Persons using this information are cautioned that the materials shown are determined by the equipment noted and accuracy of the "log of materials" is limited thereby and by judgement of the operator. THIS INFORMATION IS FOR DESIGN PURPOSES ONLY.

LETTER BOREHOLE - MODOT_20151118.GDT - 1/13/25 08:57 - G:\PROJECT FILES\2024\MG24029 I-270 GAP FROM ROUTE 367 TO LILAC AVENUE\FIELD DATA\ROUTE 367\L-270 ROUTE 367 MODOT GINT LOGS.GPJ

Missouri Department of Transportation
Construction and Materials

BORING NO. A9490-101
Page 2 of 3

Job No.: MG24029 **County:** St. Louis **Route:** Route 367
Design: **Skew:** **Location:** St. Louis County, Missouri
Bent: **Logged By:** B. Nepal **Operator:** G. Shetley
Station: **Northing:** 1069740.155 **Date of Work:** 05/23/24-05/23/24
Offset: **Easting:** 894709.716 **Depth to Water:** 23.0
Elevation: 552.4 **Requested Northing:** **Depth Hole Open:**
Requested Station: **Requested Easting:** **Time Change:**
Requested Offset: **Equipment:** CME 750Y ,Spit-Spoon Sampler, Shelby Tube, NQ
Requested Elevation: **Location Note:**
Drill No.: UES **Hammer Efficiency:** 95% **Drilling Method:** Hollow Stem Auger

Depth (ft)	Graphic	Description	Elevation (ft)	Sample Type	REC % (RQD %)	Blow Counts (N_{60})	Shear Data	Field Tests	Index Tests
35		32.0-37.0' Brown and grey, lean CLAY (CL), trace sand *(continued)*							
		37.0-62.0' Grey and brown, fat CLAY (CH), trace oxidation and trace fine sand	515						
40				X	100	3-2-4 (10)		PP = 1.50 tsf	MC = 33.3%
45			510	X	100	2-3-2 (8)		PP = 1.50 tsf	MC = 32.4%
			505						
50				X	100	2-3-5 (13)		PP = 0.50 tsf	MC = 33.7%
55		57.0' - dark brown, trace shale and sandstone below 57 ft.	500	X	100	3-3-4 (11)		PP = 1.00 tsf	MC = 33.2%
			495						
60				X	100	4-5-7 (19)		PP = 2.50 tsf	MC = 23.2%
		62.0-64.0' Weathered SHALE	490						
				X	100	50/0.4'		PP = 4.50 tsf	MC = 15.0%
65		64.0-66.0' Brown, sandy SHALE, moderately weathered, soft, very finely crystalline to aphanitic, slightly to moderately fractured 65.0' - compressive strength = 1,150 psi			≥8 (≥4)				
		66.0-74.0' Grey, SANDSTONE AND SILTSTONE, moderately weathered, soft to moderately hard	485		≥8 (≥3)				
70									

N_{60} = (Em/60)Nm N_{60} - Corrected N value for standard 60% SPT efficiency; Em - Measured hammer efficiency in percent; Nm - Observed N-value; (1) = Assumed, (2) = Actual

Coordinate System: **Coordinate Zone:** **Coordinate Proj. Factor:**
Coordinate Datum: **Coordinate Units:** U.S. Survey Feet

* Persons using this information are cautioned that the materials shown are determined by the equipment noted and accuracy of the "log of materials" is limited thereby and by judgement of the operator. THIS INFORMATION IS FOR DESIGN PURPOSES ONLY.

LETTER BOREHOLE - MODOT_20151118.GDT - 1/13/25 08:57 - G:\PROJECT FILES\2024\MG24029 I-270 GAP FROM ROUTE 367 TO LILAC AVENUE\FIELD DATA\ROUTE 367\L-270 ROUTE 367 MODOT GINT LOGS.GPJ

STATE OF MISSOURI
RYAN DAVID SHAW
NUMBER PE-2017003868
PROFESSIONAL ENGINEER
THIS SHEET HAS BEEN SIGNED, SEALED AND DATED ELECTRONICALLY

DATE PREPARED 3/27/2026
ROUTE I-270 | STATE MO
DISTRICT BR | SHEET NO. 8
COUNTY ST. LOUIS
JOB NO. JSL0021
CONTRACT ID.
PROJECT NO.
BRIDGE NO. A9491

DESCRIPTION
DATE

MISSOURI HIGHWAYS AND TRANSPORTATION COMMISSION
105 WEST CAPITOL
JEFFERSON CITY, MO 65102
1-888-ASK-MODOT (1-888-275-6636)

HDR Engineering, Inc.
1001 Highlands Plaza Drive
Suite 200
St. Louis, MO 63110-1390
314-425-8300
Certificate of Authority: 000856

BORING DATA

Note: For locations of borings, see Sheet No. 1.

Detailed October 2025
Checked October 2025

Note: This drawing is not to scale. Follow dimensions.

Missouri Department of Transportation
Construction and Materials

BORING NO. A9490-101
Page 3 of 3

Job No.: MG24029 **County:** St. Louis **Route:** Route 367
Design: **Skew:** **Location:** St. Louis County, Missouri
Bent: **Logged By:** B. Nepal **Operator:** G. Shetley
Station: **Northing:** 1069740.155 **Date of Work:** 05/23/24-05/23/24
Offset: **Easting:** 894709.716 **Depth to Water:** 23.0
Elevation: 552.4 **Requested Northing:** **Depth Hole Open:**
Requested Station: **Requested Easting:** **Time Change:**
Requested Offset: **Equipment:** CME 750Y ,Split-Spoon Sampler, Shelby Tube, NQ
Requested Elevation: **Location Note:**
Drill No.: UES **Hammer Efficiency:** 95% **Drilling Method:** Hollow Stem Auger

Depth (ft)	Graphic	Description	Elevation (ft)	Sample Type	REC % (RQD %)	Blow Counts (N_{60})	Shear Data	Field Tests	Index Tests
70		66.0-74.0' Grey, SANDSTONE AND SILTSTONE, moderately weathered, soft to moderately hard *(continued)*	480		100 (94)				
		Refusal at 63.9 feet. Bottom of borehole at 74.0 feet.							

N_{60} = (Em/60)Nm N_{60} - Corrected N value for standard 60% SPT efficiency; Em - Measured hammer efficiency in percent; Nm - Observed N-value; (1) = Assumed, (2) = Actual

Coordinate System: **Coordinate Zone:** **Coordinate Proj. Factor:**
Coordinate Datum: **Coordinate Units:** U.S. Survey Feet

* Persons using this information are cautioned that the materials shown are determined by the equipment noted and accuracy of the "log of materials" is limited thereby and by judgement of the operator. THIS INFORMATION IS FOR DESIGN PURPOSES ONLY.

LETTER BOREHOLE - MODOT_20151118.GDT - 1/13/25 08:57 - G:\PROJECT FILES\20241\MG24029 I-270 GAP FROM ROUTE 367 TO LILAC AVENUE\FIELD DATA\ROUTE 367\I-270 ROUTE 367 MODOT GINT LOGS.GPJ

BORING DATA

Note: For locations of borings, see Sheet No. 1.

Detailed October 2025
Checked October 2025

Note: This drawing is not to scale. Follow dimensions.

Sheet No. 9 of 10

RYAN DAVID SHAW
NUMBER PE-2011000388
STATE OF MISSOURI
PROFESSIONAL ENGINEER
THIS SHEET HAS BEEN SIGNED, SEALED AND DATED ELECTRONICALLY

DATE PREPARED 3/27/2026
ROUTE I-270 | STATE MO
DISTRICT BR | SHEET NO. 9
COUNTY ST. LOUIS
JOB NO. JSL0021
CONTRACT ID.
PROJECT NO.
BRIDGE NO. A9491

DESCRIPTION | DATE

MISSOURI HIGHWAYS AND TRANSPORTATION COMMISSION
105 WEST CAPITOL
JEFFERSON CITY, MO 65102
1-888-ASK-MODOT (1-888-275-6636)

HDR Engineering, Inc.
1001 Highlands Plaza Drive
Suite 200
St. Louis, MO 63110-1390
314-425-8300
Certificate of Authority: 000856

c:\pwworking\central01\d4975496\B_A9491_009_SL0021.dgn 10:59:14 AM 3/27/2026

Missouri Department of Transportation
Construction and Materials

BORING NO. A9491-4
Page 1 of 2

Job No.: MG24029 **County:** St. Louis **Route:** Route 367
Design: **Skew:** **Location:** St. Louis County, Missouri
Bent: **Logged By:** B. Nepal **Operator:** G. Shetley
Station: **Northing:** 1069797.984 **Date of Work:** 05/21/24-05/21/24
Offset: **Easting:** 894688.517 **Depth to Water:** 13.0
Elevation: 550.9 **Requested Northing:** **Depth Hole Open:**
Requested Station: **Requested Easting:** **Time Change:**
Requested Offset: **Equipment:** CME 750Y ,Split-Spoon Sampler, Shelby Tube
Requested Elevation: **Location Note:**
Drill No.: UES **Hammer Efficiency:** 95% **Drilling Method:** Hollow Stem Auger

Depth (ft)	Graphic	Description	Elevation (ft)	Sample Type	REC % (RQD %)	Blow Counts (N_{60})	Shear Data	Field Tests	Index Tests
0		0.0-0.3' TOPSOIL (4"), Brown	550						
		0.3-6.0' Brown, fine to medium SAND (SW), with clay seams		X	56	3-3-2 (8)			MC = 12.3%
5			545						
		6.0-12.0' Brown, fine to medium SAND (SP)		■	19				
10			540						
		12.0-22.0' Grey and brown, lean CLAY (CL), trace sand		X	100	2-2-3 (8)		PP = 0.50 tsf	MC = 24.1%
15			535						
		18.5' - more plastic below 18.5 feet		X	100	2-2-3 (8)		PP = 1.50 tsf	MC = 25.8%
20			530						
		22.0-27.0' Tan, clayey SAND (SC)		X	100	1-0-1 (2)			MC = 31.4%
25			525						
		27.0-32.0' Brown and grey lean CLAY (CL), trace fine sand		X	100	1-1-3 (6)		PP = 1.00 tsf	MC = 29.5%
30			520						
		32.0-37.0' Tan fine sand to grey lean to fat CLAY (CL-CH), trace oxidation		X	100	3-4-4 (13)		PP = 2.00 tsf	MC = 25.9%
35									

N_{60} = (Em/60)Nm N_{60} - Corrected N value for standard 60% SPT efficiency; Em - Measured hammer efficiency in percent; Nm - Observed N-value; (1) = Assumed, (2) = Actual

Coordinate System: **Coordinate Zone:** **Coordinate Proj. Factor:**
Coordinate Datum: **Coordinate Units:** U.S. Survey Feet

* Persons using this information are cautioned that the materials shown are determined by the equipment noted and accuracy of the "log of materials" is limited thereby and by judgement of the operator. THIS INFORMATION IS FOR DESIGN PURPOSES ONLY.

LETTER BOREHOLE - MODOT_20151118.GDT - 1/13/25 08:57 - G:\PROJECT FILES\2024\MG24029 I-270 GAP FROM ROUTE 367 TO LILAC AVENUE\FIELD DATA\ROUTE 367\L-270 ROUTE 367 MODOT GINT LOGS.GPJ

Missouri Department of Transportation
Construction and Materials

BORING NO. A9491-4
Page 2 of 2

Job No.: MG24029 **County:** St. Louis **Route:** Route 367
Design: **Skew:** **Location:** St. Louis County, Missouri
Bent: **Logged By:** B. Nepal **Operator:** G. Shetley
Station: **Northing:** 1069797.984 **Date of Work:** 05/21/24-05/21/24
Offset: **Easting:** 894688.517 **Depth to Water:** 13.0
Elevation: 550.9 **Requested Northing:** **Depth Hole Open:**
Requested Station: **Requested Easting:** **Time Change:**
Requested Offset: **Equipment:** CME 750Y ,Spit-Spoon Sampler, Shelby Tube
Requested Elevation: **Location Note:**
Drill No.: UES **Hammer Efficiency:** 95% **Drilling Method:** Hollow Stem Auger

Depth (ft)	Graphic	Description	Elevation (ft)	Sample Type	REC % (RQD %)	Blow Counts (N_{60})	Shear Data	Field Tests	Index Tests
35		32.0-37.0' Tan fine sand to grey lean to fat CLAY (CL-CH), trace oxidation *(continued)*	515						
		37.0-40.0' Light brown fat CLAY (CH), trace oxidation and trace fine sand		X	100	1-3-4 (11)		PP = 2.00 tsf	MC = 31.6%
40		Bottom of borehole at 40.0 feet.							

N_{60} = (Em/60)Nm N_{60} - Corrected N value for standard 60% SPT efficiency; Em - Measured hammer efficiency in percent; Nm - Observed N-value; (1) = Assumed, (2) = Actual

Coordinate System: **Coordinate Zone:** **Coordinate Proj. Factor:**
Coordinate Datum: **Coordinate Units:** U.S. Survey Feet

* Persons using this information are cautioned that the materials shown are determined by the equipment noted and accuracy of the "log of materials" is limited thereby and by judgement of the operator. THIS INFORMATION IS FOR DESIGN PURPOSES ONLY.

LETTER BOREHOLE - MODOT_20151118.GDT - 1/13/25 08:57 - G:\PROJECT FILES\2024\MG24029 I-270 GAP FROM ROUTE 367 TO LILAC AVENUE\FIELD DATA\ROUTE 367\L-270 ROUTE 367 MODOT GINT LOGS.GPJ

STATE OF MISSOURI
RYAN DAVID SHAW
NUMBER PE-2017002368
PROFESSIONAL ENGINEER
THIS SHEET HAS BEEN SIGNED, SEALED AND DATED ELECTRONICALLY

DATE PREPARED 3/27/2026
ROUTE I-270 | STATE MO
DISTRICT BR | SHEET NO. 10
COUNTY ST. LOUIS
JOB NO. JSL0021
CONTRACT ID.
PROJECT NO.
BRIDGE NO. A9491

DESCRIPTION	DATE

MISSOURI HIGHWAYS AND TRANSPORTATION COMMISSION
105 WEST CAPITOL
JEFFERSON CITY, MO 65102
1-888-ASK-MODOT (1-888-275-6636)

HDR Engineering, Inc.
1001 Highlands Plaza Drive
Suite 200
St. Louis, MO 63110-1390
314-425-8300
Certificate of Authority: 000856

BORING DATA

Note: For locations of borings, see Sheet No. 1.

Detailed October 2025
Checked October 2025

Note: This drawing is not to scale. Follow dimensions.

c:\pwworking\central01\d4975496\B_A9491_010_SL0021.dgn 10:59:34 AM 3/27/2026

SEC/SUR 33 TWP 47 N RGE 7E

220.4' MECHANICALLY STABILIZED EARTH (MSE) RETAINING WALL SYSTEM

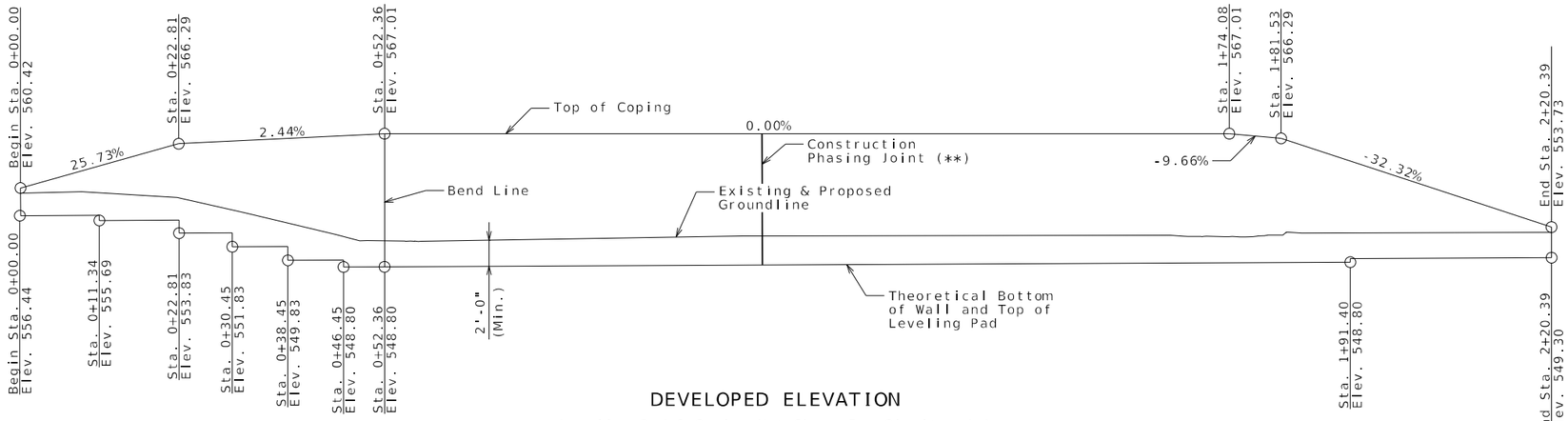

DEVELOPED ELEVATION

Leveling Pad & Coping Not Shown For Clarity, (*)
Stations Along ℄ Wall

BM #5 - CUT SQUARE ON CONC BASE OF DOUBLE POST SIGN; SOUTH OF I-270, ALSO BEING ON THE WEST SIDE OF ROUTE 367
ELEV= 558.50
NAVD - 88

BM #6 - CUT SQUARE ON CONC PAD FOR AREA INLET; JUST NORTH OF I-270, ALSO BEING ON THE WEST SIDE OF ROUTE 367
ELEV= 550.30
NAVD - 88

◓ Indicates location of borings.

Notes:
For General Notes, Estimated Quantities and Location Sketch, see Sheet No. 2.

For locations and mounting details of Underpass Lighting, see Roadway Plans.

Notice and Disclaimer Regarding Boring Log Data

The locations of all subsurface borings for this structure are shown on the plan sheet for this structure. The boring data for all locations indicated, as well as any other boring logs or other factual records of subsurface data and investigations performed by the department for the design of the project, are shown on Sheets No. 4 thru 10 and may be included in the Electronic Bridge Deliverables. They will also be available from the Project Contact upon written request. No greater significance or weight should be given to the boring data depicted on the plan sheets than is given to the subsurface data available from the district elsewhere.

The Commission does not represent or warrant that any such boring data accurately depicts the conditions to be encountered in constructing this project. A contractor assumes all risks it may encounter in basing its bid prices, time or schedule of performance on the boring data depicted here or those available from the district, or on any other documentation not expressly warranted, which the contractor may obtain from the Commission.

(*) Wall contractor shall show the following items on the design drawings and/or on the fabricator shop drawings.

1. Leveling pad horizontal.
2. Leveling pad length and step elevations shall be based on wall manufacturer's recommendation. Top of leveling pad elevations shall not be higher than the theoretical top of leveling pad elevations shown on these plans.

(**) Location and design of Construction Phasing Joint to be determined by the Contractor and MSE Wall designer.

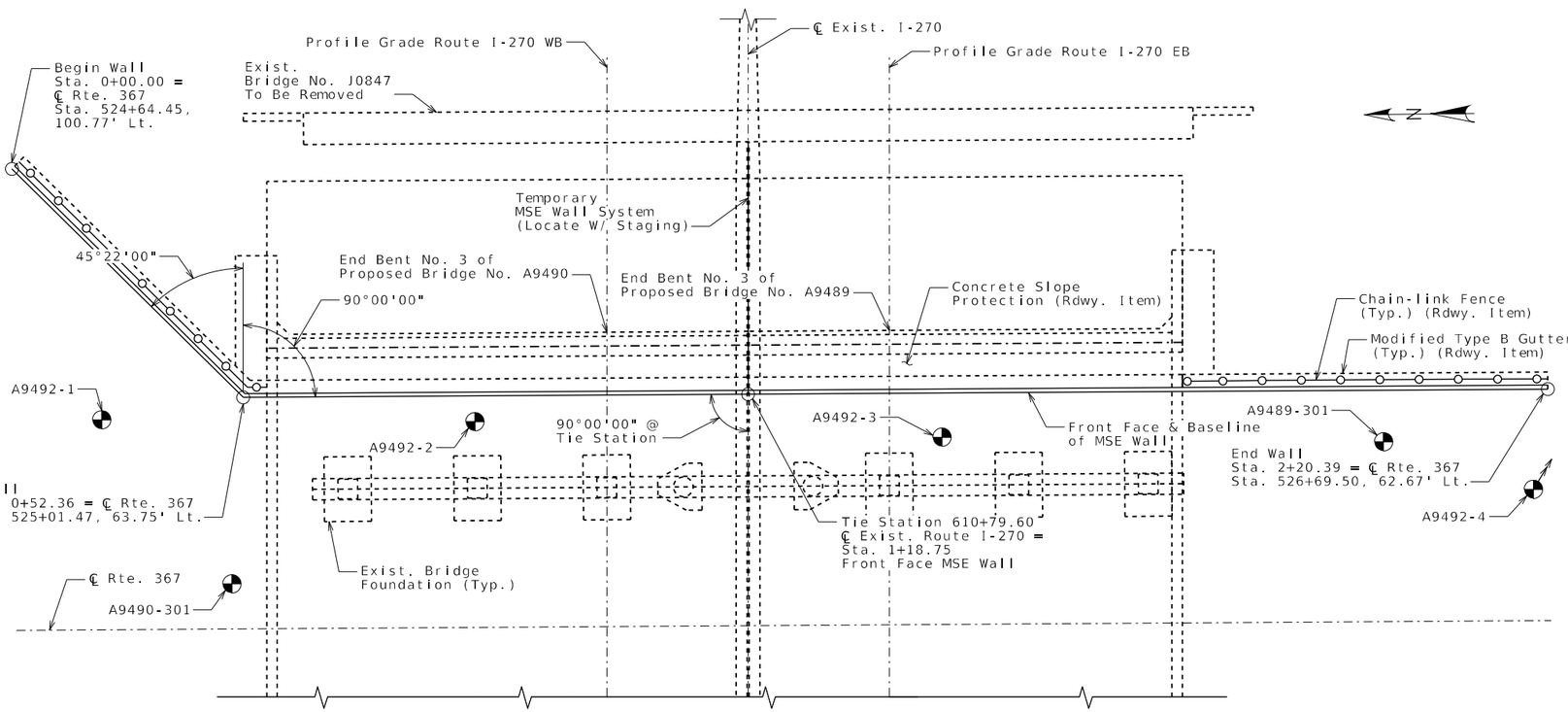

PLAN

Leveling pad not shown for clarity

RETAINING WALL ALONG ROUTE 367 NEAR END BENT NO. 3 OF BRIDGES NO. A9489 and A9490

ROUTE I-270 FROM ROUTE AC TO ROUTE H

ABOUT 1.5 MILES EAST OF ROUTE AC

BEGINNING STATION 0+00.00

Designed October 2025
Detailed October 2025
Checked October 2025

Note: This drawing is not to scale. Follow dimensions.

RYAN DAVID SHAW
NUMBER PE-2011000388
STATE OF MISSOURI
PROFESSIONAL ENGINEER
THIS SHEET HAS BEEN SIGNED, SEALED AND DATED ELECTRONICALLY

DATE PREPARED 3/27/2026
ROUTE I-270 | STATE MO
DISTRICT BR | SHEET NO. 1
COUNTY ST. LOUIS
JOB NO. JSL0021
CONTRACT ID.
PROJECT NO.
BRIDGE NO. A9492

DESCRIPTION | DATE

MISSOURI HIGHWAYS AND TRANSPORTATION COMMISSION
105 WEST CAPITOL
JEFFERSON CITY, MO 65102
1-888-ASK-MODOT (1-888-275-6636)

HDR Engineering, Inc.
1001 Highlands Plaza Dr
Ste 200
St. Louis, MO 63110-1390
314-425-8300
Certificate of Authority: 000856

General Notes:

Design Specifications:

2020 AASHTO LRFD Bridge Design Specifications (9th Ed.)
2023 AASHTO Guide Specifications for LRFD Seismic Bridge Design (3rd Ed.)
Seismic Design Category = B (Seismic Zone - 2) (Seismic Analysis)
Design earthquake response spectral acceleration coefficient at 1.0 second period, S_{D1} = 0.219
Acceleration Coefficient (effective peak ground acceleration coefficient), A_S = 0.229

Design Loading:

Lightweight Cellular Concrete = 36 lb/cf (max.), High Strength Material (see Job Special Provisions)

For strength limit state and extreme event limit state, the wall designer to confirm that the minimum Capacity to Demand Ratio (CDR) for bearing, sliding, overturning, eccentricity, and internal stability is greater than or equal to 1.0. MSE wall designer shall include this note on shop drawings.

For Extreme Event I limit state, the wall designer shall design wall for γEQ = 0.5

Φb = 25° and Unit weight, γb = 120 pcf for retained backfill material to be retained by the mechanically stabilized earth wall system.

Φ_f = 25° for unimproved foundation ground where wall is to bear.

For unimproved foundation ground, factored bearing resistance is 3.3 ksf for strength limit state and factored bearing resistance is 4.6 ksf for extreme event limit state.

The maximum applied factored bearing stress for the strength and extreme event limit state(s) at the foundation level shall be shown on the shop drawings and shall be less than the factored bearing resistance.

Factored bearing resistance shall be used as shown on the plans. No adjustments are allowed.

Contractor shall include design Φr (actual $\Phi r \geq 34°$) and the total unit weight, γr, for the select granular backfill (wedge area backfill) for structural systems on shop drawings. Contractor shall identify source of select granular backfill material, submit proctor in accordance with AASHTO T 99 (ASTM D698) and gradation with the shop drawings. When backfill material is too coarse to develop a proctor curve the contractor shall determine the maximum dry density (relative density) in accordance with ASTM D4253 and ASTM D4254 and assume percent passing the 200 sieve for optimum water content.

Total unit weight, γr = (95% compaction) x (maximum dry density) x (1 + optimum water content)

Design Φr = 34°for the select granular backfill (reinforced backfill) for structural systems.

Seismic analysis provisions shall not be ignored for MSE wall design.

Use default values for the pullout friction factor, F*, in accordance with LRFD figure 11.10.6.3.2-2 and default value for scale effect correction factor, α, in accordance with LRFD table 11.10.6.3.2-1. For approved steel strips not shown in LRFD figure 11.10.6.3.2-2, use F* ≤ 2.0 at zero depth and F* ≤ Tan Φr at 20 feet depth and Φr design = 34°. F* and α values shall be shown on the shop drawings.

Design Unit Stresses:

All concrete for leveling pad and coping shall be Class B or B-1 with f'c = 4000 psi.

The minimum compressive strength of concrete for precast modular panel shall be 4,000 psi in accordance with Sec 1052.

Excavation:

Excavation quantities and pay items are given on the roadway plans. Excavation quantities are based on a soil reinforcement length of 0.75H, where H is the overall wall height in feet and includes the two feet of added embedment. The soil reinforcement length may vary based upon the wall design selected by the contractor. Plan excavation quantities will be paid regardless of any actual quantities removed based on the soil reinforcement length and design selected.

The MSE wall system shall be built vertical.

The MSE wall system shall be built in accordance with Sec 720.

The MSE wall system shall be a precast modular panel wall system.

Precast modular panel, drycast modular block, wetcast modular block and coping (or capstone) reinforcement shall be epoxy coated.

A filter cloth meeting the requirements for a Separation Geotextile material shall be placed between the select granular backfill for structural systems and the backfill being retained by the mechanically stabilized earth wall system.

Coping shall be required on this structure. When CIP coping sections extend beyond the limits of a single panel, bond breaker (roofing felt or other approved alternate) between wall panel and coping is required. Coping joints shall use 3/4-inch chamfers and shall be sealed with 3/4-inch joint filler. Coping reinforcement shall terminate 1 1/2-inch minimum from face of coping joint.

The contractor shall be solely responsible to coordinate construction of the wall with bridge and roadway construction and ensure that the bridge and roadway construction, resulting or existing obstructions, shall not impact the construction or performance of the wall. Soil reinforcement shall be designed and placed to avoid damage by pile driving, guardrail post installation, utility and sign foundations. (See Roadway and Bridge plans.)

Minimum 18" wide geotextile strips shall be centered at vertical and horizontal joints of panel. Geotextile material shall be adhered to back face of panel using an adhesive compound supplied by the manufacturer. All edges of each fabric strip shall provide a positive seal. A minimum 12" overlap shall be provided between spliced filter fabric.

Aluminized soil reinforcement shall have edges coated with coating material per manufacturer.

Soil reinforcement shall be spaced to avoid roadway drop inlet behind wall.

Upper two layers of soil reinforcement shall be extended 3 feet beyond the lower layers when wall height is greater than or equal to 10 feet.

All steel soil reinforcements shall be separated from other metallic elements by at least 3 inches.

The splay angle should be less than 15° and tensile capacity of splayed reinforcement shall be reduced by the cosine of the splay angle. Soil reinforcement shall clear the obstruction by at least 3 inches.

No reinforcement shall be left unconnected to the wall face or arbitrarily cut/bent in the field to avoid the obstruction.

Where interference between the vertical obstruction and the soil reinforcement is unavoidable, the design of the wall near the obstruction may be modified using one of the alternatives in FHWA-NHI-10-024, Section 5.4.2. Show detail layout on the drawings. For wall designs with horizontal obstructions in reinforced soil mass, see FHWA-NHI-10-024, Section 5.4.3.

Contractor shall be responsible for the internal stability, external stability, compound stability, and overall global stability of the MSE wall structure. The soil parameters assumed for the temporary MSE wall design shall be those shown on the plan details for the MSE wall and shown in the foundation report. The contractor shall submit the proposed method of temporary MSE wall construction to the engineer prior to beginning work. See specisl provisions.

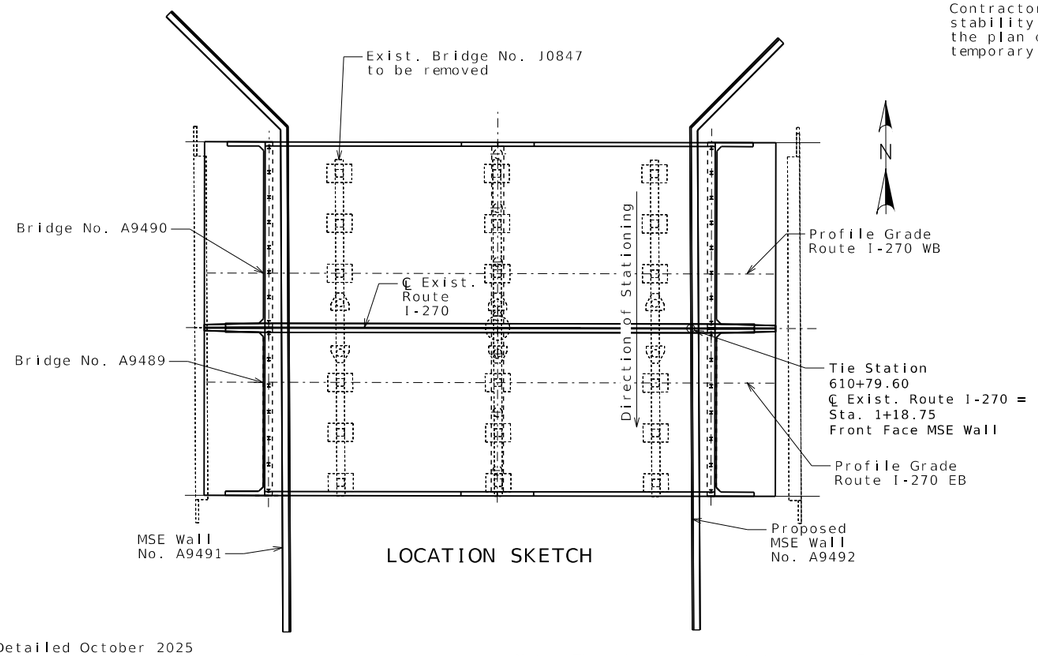

LOCATION SKETCH

Estimated Quantities

Item		Total
Aesthetic Concrete Stain	lump sum	1
Temporary MSE Wall System	lump sum	1
Mechanically Stabilized Earth Wall Systems with Lightweight Fill	sq. foot	3393

MSE Wall Systems Data Table

Proprietary Wall Systems		Combination Wall Systems			
Manufacturer	System	Facing Unit Manufacturer	Facing Unit	Geogrid Manufacturer	Geogrid

MSE Wall Systems Data Table is to be completed by MoDOT construction personnel to record the manufacturer of the proprietary wall system or the manufacturers of the combination wall system that was used for constructing the MSE wall.

STATE OF MISSOURI
RYAN DAVID SHAW
NUMBER PE-2017000388
PROFESSIONAL ENGINEER
THIS SHEET HAS BEEN SIGNED, SEALED AND DATED ELECTRONICALLY

DATE PREPARED 3/27/2026
ROUTE I-270 | STATE MO
DISTRICT BR | SHEET NO. 2
COUNTY ST. LOUIS
JOB NO. JSL0021
CONTRACT ID.
PROJECT NO.
BRIDGE NO. A9492

DATE	DESCRIPTION

MISSOURI HIGHWAYS AND TRANSPORTATION COMMISSION
105 WEST CAPITOL
JEFFERSON CITY, MO 65102
1-888-ASK-MODOT (1-888-275-6636)

HDR Engineering, Inc.
1001 Highlands Plaza Dr
Ste 200
St. Louis, MO 63110-1390
314-425-8300
Certificate of Authority: 000856

Detailed October 2025
Checked October 2025

Note: This drawing is not to scale. Follow dimensions.

c:\pwworking\central01\d4975497\B_A9492_002_SL0021.dgn 11:07:59 AM 3/27/2026

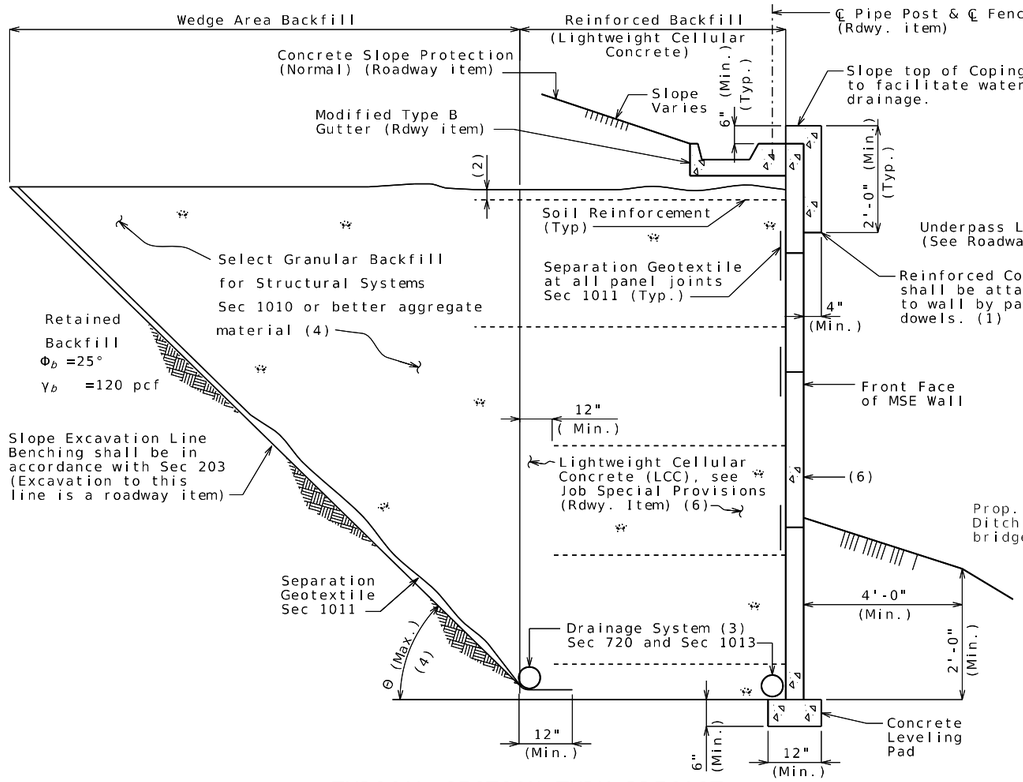

TYPICAL SECTION THRU PRECAST MODULAR PANEL WALL (GENERAL)

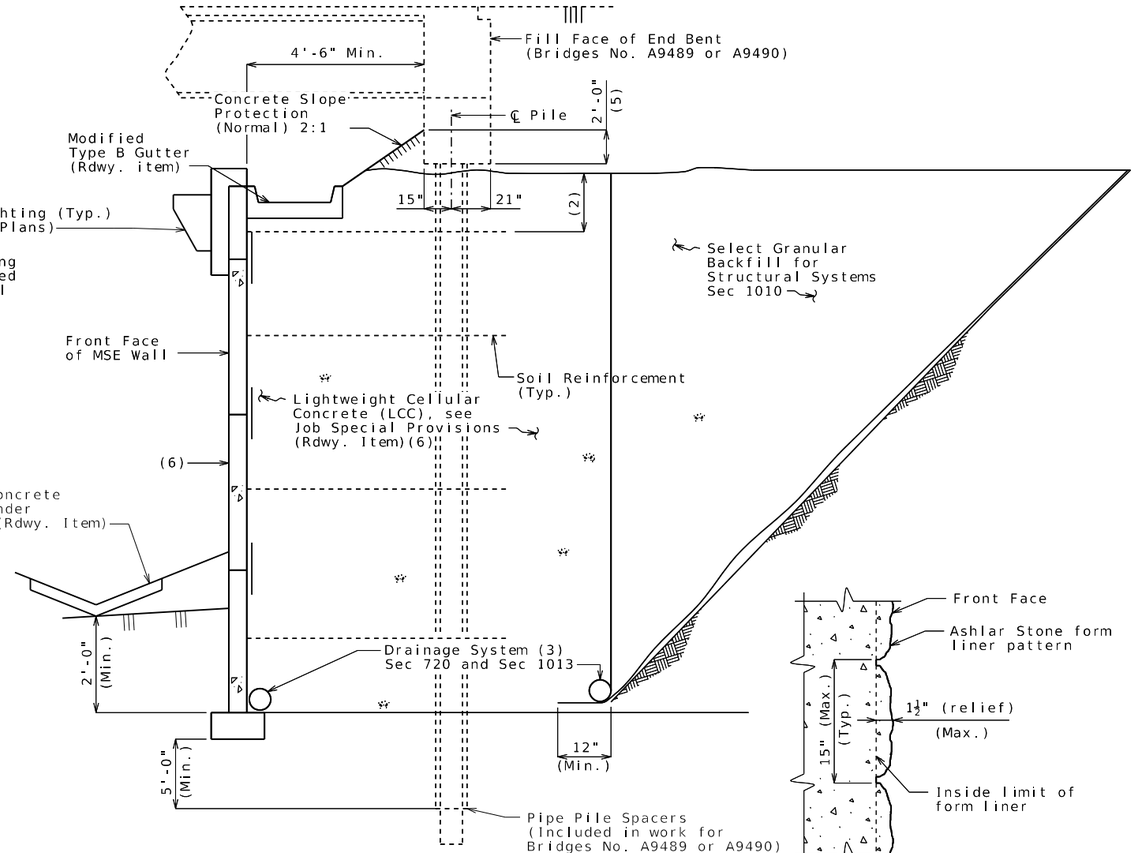

TYPICAL SECTION THRU PRECAST MODULAR PANEL WALL UNDER BRIDGE

FORM LINER DETAIL (PRECAST MODULAR PANEL WALL)

(4) Where the angle, Θ, between the retained backfill excavation/fill line and the horizontal is less than 90°, the wedge area backfill between Θ and 90° shall be filled with select granular backfill for structural systems meeting the requirements of Section 1010.

- For 45° < Θ ≤ 90°, properties for retained backfill shall be used for active force computations.

- For Θ ≤ 45°, contractor shall have the option to use select granular backfill, Φ_r, or better aggregate material for active force computations in the wedge area backfill. For active force computations, the angle of internal friction for wedge area backfill material, Φ_r, shall be limited to 34° unless determined otherwise in accordance with Section 1010. If $\Phi_r > 34°$ is desired for wedge area backfill then test report shall be submitted with manufacturer's design plans. Φ_r shall not be greater than 40°. Final configuration of this option shall be sent to Geotechnical Section for a new overall global stability analysis. Design $\Phi_r°$ shall be shown on manufacturer's plans if used.

The slope excavation line shall be benched and separation geotextile shall be placed between the retained backfill and either select granular backfill or better aggregate material, and between the select granular backfill and better aggregate material.

Show range of acceptable theta (Θ) angle on shop drawings which must be consistent with design computations and proposed construction of wall. Show active force computation properties ($\Phi° = \Phi_r°$ and $\gamma = \gamma_r$ or $\Phi° = \Phi_b°$ and $\gamma = \gamma_b$) on shop drawings and in design computations. Coordination between wall designer (manufacturer) and contractor is required before shop drawing submittal.

Material Properties Used in Design						
Reinf. Fill/Select Granular Backfill			Active Force Computations			Foundation
$\Phi_r°$	γ_r (pcf)		$\Phi°$	γ (pcf)		$\Phi_f°$

MSE Wall designer shall include table on shop drawings and provide values used in the design computations. Effects of cohesion shall be ignored unless approved by the engineer.

Notes for Form Liners:

The cost of form liners for MSE wall systems,complete in place, will be considered completely covered by the contract unit price for Mechanically Stabilized Earth Wall System.

Form liner shall be constructed in accordance with Special Provisions.

Form liner pattern shall be 'Ashlar Stone'. Manufacturer and form liner pattern shall be approved by the engineer prior to construction.

Note: For additional information, see Typical Section Thru Precast Modular Panel Wall (General).

(1) Inverted U-shape reinforced capstone may be used in lieu of coping. Panel dowels for level-up concrete shall be required, and provided by manufacturer. The dowels shall be field trimmed to clear the capstone by a minumum of 1 1/2 inches and a maximum of 2 1/2 inches.

(2) Topmost layer of reinforcement shall be fully covered with select granular backfill for structural systems, as approved by the wall manufacturer, before placement of the Separation Geotextile.

(3) Minimum 6" diameter perforated PVC or PE pipe.

Manufacturer shall show drain details on design plans to be submitted as shown on MoDOT MSE wall plans and/or roadway plans.

Contractor shall modify the drain details as shown if it will improve flow as may be the case for stepped leveling pad, and for an uneven ground line (approval of the engineer required).

(5) See bridge plans.

(6) Aesthetic Concrete Stain. See special provisions.

DETAILS FOR GENERIC MSE WALL

Detailed October 2025
Checked October 2025

Note: This drawing is not to scale. Follow dimensions.

Sheet No. 3 of 10

RYAN DAVID SHAW NUMBER PE-2011000388 STATE OF MISSOURI PROFESSIONAL ENGINEER
THIS SHEET HAS BEEN SIGNED, SEALED AND DATED ELECTRONICALLY

DATE PREPARED 3/27/2026
ROUTE I-270 | STATE MO
DISTRICT BR | SHEET NO. 3
COUNTY ST. LOUIS
JOB NO. JSL0021
CONTRACT ID.
PROJECT NO.
BRIDGE NO. A9492

DESCRIPTION | DATE

MISSOURI HIGHWAYS AND TRANSPORTATION COMMISSION
105 WEST CAPITOL
JEFFERSON CITY, MO 65102
1-888-ASK-MODOT (1-888-275-6636)

HDR Engineering, Inc.
1001 Highlands Plaza Dr
Ste 200
St. Louis, MO 63110-1390
314-425-8300
Certificate of Authority: 000856

Missouri Department of Transportation
Construction and Materials

BORING NO. A9492-1
Page 1 of 2

Job No.: MG24029 **County:** St. Louis **Route:** Route 367
Design: **Skew:** **Location:** St. Louis County, Missouri
Bent: **Logged By:** J. Stauffer **Operator:** S. Conrad
Station: **Northing:** 1069736.354 **Date of Work:** 05/17/24-05/17/24
Offset: **Easting:** 894755.696 **Depth to Water:** 20.0
Elevation: 550.5 **Requested Northing:** **Depth Hole Open:**
Requested Station: **Requested Easting:** **Time Change:**
Requested Offset: **Equipment:** CME 55LC ,Split-Spoon Sampler, Shelby Tube
Requested Elevation: **Location Note:**
Drill No.: UES **Hammer Efficiency:** 79% **Drilling Method:** Hollow Stem Auger

Depth (ft)	Graphic	Description	Elevation (ft)	Sample Type	REC % (RQD %)	Blow Counts (N_{60})	Shear Data	Field Tests	Index Tests
0		0.0-3.0' FILL: Grey and brown, lean CLAY (CL), trace organics	550		100		Qu Test Results UCS = 2.72 ksf MC = 22.1% γ_{moist} = 130 pcf	PP = 4.00 tsf	MC = 22.1%
		2.0' - UU test performed at 2.0 ft.: shear strength = 1.15 tsf dry density = 98.1 pcf			85		Trixial Results MC = 24% γ_{moist} = 121.6 pcf	PP = 2.50 tsf	MC = 24.0%
5		3.0-22.0' Brown and grey, lean CLAY (CL)	545		96		Qu Test Results UCS = 1.76 ksf MC = 26.8% γ_{moist} = 122.9 pcf	PP = 1.75 tsf	LL = 43 PL = 19 MC = 26.8%
					96			PP = 0.25 tsf	MC = 29.0%
		8.0' - UU test performed at 8.0 ft.: shear strength = 0.26 tsf dry density = 90.7 pcf			100		Qu Test Results UCS = 1.72 ksf MC = 29% γ_{moist} = 122.4 pcf	PP = 1.50 tsf	MC = 30.5%
10			540		100		Trixial Results MC = 30.5% γ_{moist} = 118.4 pcf	PP = 1.50 tsf	MC = 31.1%
							Qu Test Results UCS = 1.20 ksf MC = 31.1% γ_{moist} = 120.3 pcf		
15		14.0' - UU test performed at 14.0 ft.: shear strength = 0.86 tsf dry density = 98.7 pcf	535		100			PP = 2.00 tsf	MC = 25.3%
					100		Trixial Results MC = 25.3% γ_{moist} = 123.7 pcf	PP = 2.25 tsf	MC = 25.2%
20			530		100		Qu Test Results UCS = 1.96 ksf MC = 25.2% γ_{moist} = 123.9 pcf	PP = 1.50 tsf	
		22.0-27.0' Brown and grey, fat CLAY (CH)			100	2-3-5 (11)		PP = 2.50 tsf	MC = 23.2%
25			525						
		27.0-32.0' Brown, clayey SAND (SC)			100	2-2-2 (5)			MC = 28.1%
30			520						
		32.0-40.0' Brown and grey, fat CLAY (CH)			100	2-2-3 (7)		PP = 0.50 tsf	MC = 28.1%
35									

N_{60} = (Em/60)Nm N_{60} - Corrected N value for standard 60% SPT efficiency; Em - Measured hammer efficiency in percent; Nm - Observed N-value; (1) = Assumed, (2) = Actual

Coordinate System: **Coordinate Zone:** **Coordinate Proj. Factor:**
Coordinate Datum: **Coordinate Units:** U.S. Survey Feet

* Persons using this information are cautioned that the materials shown are determined by the equipment noted and accuracy of the "log of materials" is limited thereby and by judgement of the operator. THIS INFORMATION IS FOR DESIGN PURPOSES ONLY.

LETTER BOREHOLE - MODOT_20151118.GDT - 1/13/25 08:57 - G:\PROJECT FILES\20241MG24029 I-270 GAP FROM ROUTE 367 TO LILAC AVENUE\FIELD DATA\ROUTE 367\L-270 ROUTE 367 MODOT GINT LOGS.GPJ

Missouri Department of Transportation
Construction and Materials

BORING NO. A9492-1
Page 2 of 2

Job No.: MG24029 **County:** St. Louis **Route:** Route 367
Design: **Skew:** **Location:** St. Louis County, Missouri
Bent: **Logged By:** J. Stauffer **Operator:** S. Conrad
Station: **Northing:** 1069736.354 **Date of Work:** 05/17/24-05/17/24
Offset: **Easting:** 894755.696 **Depth to Water:** 20.0
Elevation: 550.5 **Requested Northing:** **Depth Hole Open:**
Requested Station: **Requested Easting:** **Time Change:**
Requested Offset: **Equipment:** CME 55LC ,Spit-Spoon Sampler, Shelby Tube
Requested Elevation: **Location Note:**
Drill No.: UES **Hammer Efficiency:** 79% **Drilling Method:** Hollow Stem Auger

Depth (ft)	Graphic	Description	Elevation (ft)	Sample Type	REC % (RQD %)	Blow Counts (N_{60})	Shear Data	Field Tests	Index Tests
35		32.0-40.0' Brown and grey, fat CLAY (CH) *(continued)*	515						
40		Bottom of borehole at 40.0 feet.			78	2-5-5 (13)		PP = 2.00 tsf	MC = 40.3%

N_{60} = (Em/60)Nm N_{60} - Corrected N value for standard 60% SPT efficiency; Em - Measured hammer efficiency in percent; Nm - Observed N-value; (1) = Assumed, (2) = Actual

Coordinate System: **Coordinate Zone:** **Coordinate Proj. Factor:**
Coordinate Datum: **Coordinate Units:** U.S. Survey Feet

* Persons using this information are cautioned that the materials shown are determined by the equipment noted and accuracy of the "log of materials" is limited thereby and by judgement of the operator. THIS INFORMATION IS FOR DESIGN PURPOSES ONLY.

LETTER BOREHOLE - MODOT_20151118.GDT - 1/13/25 08:57 - G:\PROJECT FILES\20241MG24029 I-270 GAP FROM ROUTE 367 TO LILAC AVENUE\FIELD DATA\ROUTE 367\L-270 ROUTE 367 MODOT GINT LOGS.GPJ

STATE OF MISSOURI
RYAN DAVID SHAW
NUMBER PE-2017000388
PROFESSIONAL ENGINEER
THIS SHEET HAS BEEN SIGNED, SEALED AND DATED ELECTRONICALLY

DATE PREPARED 3/27/2026
ROUTE I-270 | STATE MO
DISTRICT BR | SHEET NO. 4
COUNTY ST. LOUIS
JOB NO. JSL0021
CONTRACT ID.
PROJECT NO.
BRIDGE NO. A9492

DESCRIPTION | DATE

MISSOURI HIGHWAYS AND TRANSPORTATION COMMISSION
105 WEST CAPITOL
JEFFERSON CITY, MO 65102
1-888-ASK-MODOT (1-888-275-6636)

HDR Engineering, Inc.
1001 Highlands Plaza Dr
Ste 200
St. Louis, MO 63110-1390
314-425-8300
Certificate of Authority: 000856

BORING DATA

Note: For locations of borings, see Sheet No. 1.

Detailed October 2025
Checked October 2025

Note: This drawing is not to scale. Follow dimensions.

c:\pwworking\central01\d4975497\B_A9492_004_SL0021.dgn 11:08:15 AM 3/27/2026

Missouri Department of Transportation
Construction and Materials

BORING NO. A9490-301
Page 1 of 3

Job No.: MG24029 **County:** St. Louis **Route:** Route 367
Design: **Skew:** **Location:** St. Louis County, Missouri
Bent: **Logged By:** B. Nepal **Operator:** G. Shetley
Station: **Northing:** 1069738.059 **Date of Work:** 05/17/24-05/17/24
Offset: **Easting:** 894788.548 **Depth to Water:** 18.0
Elevation: 552.4 **Requested Northing:** **Depth Hole Open:**
Requested Station: **Requested Easting:** **Time Change:**
Requested Offset: **Equipment:** CME 750Y ,Split-Spoon Sampler, Shelby Tube, NQ
Requested Elevation: **Location Note:**
Drill No.: UES **Hammer Efficiency:** 95% **Drilling Method:** Hollow Stem Auger

Depth (ft)	Graphic	Description	Elevation (ft)	Sample Type	REC % (RQD %)	Blow Counts (N_{60})	Shear Data	Field Tests	Index Tests
0		0.0-0.5' ASPHALT (6")							
		0.5-1.0' CONCRETE (6")							
		1.0-17.0' Grey and brown, lean CLAY (CL)	550						
5				X	72	6-2-3 (8)		PP = 1.50 tsf	MC = 25.7%
		7.0' - grey below 7 ft.	545						
10				■	8				
			540						
15				■	0				
		17.0-32.0' Grey and brown, lean to fat CLAY (CL-CH), with fine sand and trace rock fragments	535						
20				X	67	6-4-4 (13)		PP = 1.25 tsf	MC = 22.3%
		22.0' - trace mottled black below 22 ft.	530						
25				X	22	6-4-5 (14)		PP = 0.50 tsf	MC = 28.2%
		27.0' - with sand seams below 27 ft.	525						
30				X	100	3-4-5 (14)		PP = 3.00 tsf	MC = 26.7%
		32.0-37.0' Grey and brown, lean CLAY (CL), trace fine sand	520						
35				X	100	2-2-2 (6)		PP = 0.50 tsf	MC = 30.6%

N_{60} = (Em/60)Nm N_{60} - Corrected N value for standard 60% SPT efficiency; Em - Measured hammer efficiency in percent; Nm - Observed N-value; (1) = Assumed, (2) = Actual

Coordinate System: **Coordinate Zone:** **Coordinate Proj. Factor:**
Coordinate Datum: **Coordinate Units:** U.S. Survey Feet

* Persons using this information are cautioned that the materials shown are determined by the equipment noted and accuracy of the "log of materials" is limited thereby and by judgement of the operator. THIS INFORMATION IS FOR DESIGN PURPOSES ONLY.

LETTER BOREHOLE - MODOT_20151118.GDT - 1/13/25 08:57 - G:\PROJECT FILES\2024\MG24029 I-270 GAP FROM ROUTE 367 TO LILAC AVENUE\FIELD DATA\ROUTE 367\L-270 ROUTE 367 MODOT GINT LOGS.GPJ

Missouri Department of Transportation
Construction and Materials

BORING NO. A9490-301
Page 2 of 3

Job No.: MG24029 **County:** St. Louis **Route:** Route 367
Design: **Skew:** **Location:** St. Louis County, Missouri
Bent: **Logged By:** B. Nepal **Operator:** G. Shetley
Station: **Northing:** 1069738.059 **Date of Work:** 05/17/24-05/17/24
Offset: **Easting:** 894788.548 **Depth to Water:** 18.0
Elevation: 552.4 **Requested Northing:** **Depth Hole Open:**
Requested Station: **Requested Easting:** **Time Change:**
Requested Offset: **Equipment:** CME 750Y ,Spit-Spoon Sampler, Shelby Tube, NQ
Requested Elevation: **Location Note:**
Drill No.: UES **Hammer Efficiency:** 95% **Drilling Method:** Hollow Stem Auger

Depth (ft)	Graphic	Description	Elevation (ft)	Sample Type	REC % (RQD %)	Blow Counts (N_{60})	Shear Data	Field Tests	Index Tests
35		32.0-37.0' Grey and brown, lean CLAY (CL), trace fine sand *(continued)*							
		37.0-62.0' Grey, fat CLAY (CH), trace fine sand	515						
40				X	100	2-3-4 (11)		PP = 2.00 tsf	MC = 36.5%
			510						
45				X	100	3-3-4 (11)		PP = 2.00 tsf	MC = 31.0%
		47.0' - greenish grey below 47 ft.	505						
50				X	100	2-3-5 (13)		PP = 2.00 tsf	MC = 32.0%
		52.0' - brown, trace mottled black below 52 ft.	500						
55				X	100	2-2-3 (8)		PP = 0.50 tsf	MC = 37.6%
		57.0' - grey and brown, trace fine gravel below 57 ft.	495						
60				X	100	4-6-7 (21)		PP = 3.00 tsf	MC = 22.0%
		62.0-64.0' Brown Weathered SHALE	490						
65		64.0-66.0' Brown, sandy SHALE AND SILTSTONE, moderately weathered, soft, very finely crystalline to aphanitic, slightly to moderately fractured 64.5' - compressive strength = 1,820 psi		X	100	50/0.4'			MC = 17.5%
			485	■	68 (68)				
70		66.0-74.0' Grey, SANDSTONE AND SILTSTONE, moderately weathered, moderately hard							

N_{60} = (Em/60)Nm N_{60} - Corrected N value for standard 60% SPT efficiency; Em - Measured hammer efficiency in percent; Nm - Observed N-value; (1) = Assumed, (2) = Actual

Coordinate System: **Coordinate Zone:** **Coordinate Proj. Factor:**
Coordinate Datum: **Coordinate Units:** U.S. Survey Feet

* Persons using this information are cautioned that the materials shown are determined by the equipment noted and accuracy of the "log of materials" is limited thereby and by judgement of the operator. THIS INFORMATION IS FOR DESIGN PURPOSES ONLY.

LETTER BOREHOLE - MODOT_20151118.GDT - 1/13/25 08:57 - G:\PROJECT FILES\2024\MG24029 I-270 GAP FROM ROUTE 367 TO LILAC AVENUE\FIELD DATA\ROUTE 367\L-270 ROUTE 367 MODOT GINT LOGS.GPJ

STATE OF MISSOURI
RYAN DAVID SHAW
NUMBER PE-2017000388
PROFESSIONAL ENGINEER
THIS SHEET HAS BEEN SIGNED, SEALED AND DATED ELECTRONICALLY

DATE PREPARED 3/27/2026
ROUTE I-270 | STATE MO
DISTRICT BR | SHEET NO. 5
COUNTY ST. LOUIS
JOB NO. JSL0021
CONTRACT ID.
PROJECT NO.
BRIDGE NO. A9492

DESCRIPTION | DATE

MISSOURI HIGHWAYS AND TRANSPORTATION COMMISSION
105 WEST CAPITOL
JEFFERSON CITY, MO 65102
1-888-ASK-MODOT (1-888-275-6636)

HDR Engineering, Inc.
1001 Highlands Plaza Dr
Ste 200
St. Louis, MO 63110-1390
314-425-8300
Certificate of Authority: 000856

BORING DATA

Note: For locations of borings, see Sheet No. 1.

Detailed October 2025
Checked October 2025

Note: This drawing is not to scale. Follow dimensions.

Missouri Department of Transportation
Construction and Materials

BORING NO. A9490-301
Page 3 of 3

Job No.: MG24029 **County:** St. Louis **Route:** Route 367
Design: **Skew:** **Location:** St. Louis County, Missouri
Bent: **Logged By:** B. Nepal **Operator:** G. Shetley
Station: **Northing:** 1069738.059 **Date of Work:** 05/17/24-05/17/24
Offset: **Easting:** 894788.548 **Depth to Water:** 18.0
Elevation: 552.4 **Requested Northing:** **Depth Hole Open:**
Requested Station: **Requested Easting:** **Time Change:**
Requested Offset: **Equipment:** CME 750Y ,Split-Spoon Sampler, Shelby Tube, NQ
Requested Elevation: **Location Note:**
Drill No.: UES **Hammer Efficiency:** 95% **Drilling Method:** Hollow Stem Auger

Depth (ft)	Graphic	Description	Elevation (ft)	Sample Type	REC % (RQD %)	Blow Counts (N_{60})	Shear Data	Field Tests	Index Tests
70		66.0-74.0' Grey, SANDSTONE AND SILTSTONE, moderately weathered, moderately hard *(continued)*	480		98 (83)				
		Refusal at 63.9 feet. Bottom of borehole at 74.0 feet.							

N_{60} = (Em/60)Nm N_{60} - Corrected N value for standard 60% SPT efficiency; Em - Measured hammer efficiency in percent; Nm - Observed N-value; (1) = Assumed, (2) = Actual

Coordinate System: **Coordinate Zone:** **Coordinate Proj. Factor:**
Coordinate Datum: **Coordinate Units:** U.S. Survey Feet

* Persons using this information are cautioned that the materials shown are determined by the equipment noted and accuracy of the "log of materials" is limited thereby and by judgement of the operator. THIS INFORMATION IS FOR DESIGN PURPOSES ONLY.

LETTER BOREHOLE - MODOT_20151118.GDT - 1/13/25 08:57 - G:\PROJECT FILES\20241\MG24029 I-270 GAP FROM ROUTE 367 TO LILAC AVENUE\FIELD DATA\ROUTE 367\I-270 ROUTE 367 MODOT GINT LOGS.GPJ

BORING DATA

Note: For locations of borings, see Sheet No. 1.

Detailed October 2025
Checked October 2025

Note: This drawing is not to scale. Follow dimensions.

Sheet No. 6 of 10

RYAN DAVID SHAW NUMBER PE-2011000388 STATE OF MISSOURI PROFESSIONAL ENGINEER
THIS SHEET HAS BEEN SIGNED, SEALED AND DATED ELECTRONICALLY

DATE PREPARED 3/27/2026
ROUTE I-270 | STATE MO
DISTRICT BR | SHEET NO. 6
COUNTY ST. LOUIS
JOB NO. JSL0021
CONTRACT ID.
PROJECT NO.
BRIDGE NO. A9492

DESCRIPTION | DATE

MISSOURI HIGHWAYS AND TRANSPORTATION COMMISSION
105 WEST CAPITOL
JEFFERSON CITY, MO 65102
1-888-ASK-MODOT (1-888-275-6636)

HDR Engineering, Inc.
1001 Highlands Plaza Dr
Ste 200
St. Louis, MO 63110-1390
314-425-8300
Certificate of Authority: 000856

c:\pwworking\central01\d4975497\B_A9492_006_SL0021.dgn 11:09:18 AM 3/27/2026

Missouri Department of Transportation
Construction and Materials

BORING NO. A9492-2
Page 1 of 2

Job No.: MG24029 **County:** St. Louis **Route:** Route 367
Design: **Skew:** **Location:** St. Louis County, Missouri
Bent: **Logged By:** J. Stauffer **Operator:** S. Conrad
Station: **Northing:** 1069701.187 **Date of Work:** 05/15/24-05/15/24
Offset: **Easting:** 894809.365 **Depth to Water:** 10.0
Elevation: 550.5 **Requested Northing:** **Depth Hole Open:**
Requested Station: **Requested Easting:** **Time Change:**
Requested Offset: **Equipment:** CME 55LC ,Split-Spoon Sampler
Requested Elevation: **Location Note:**
Drill No.: UES **Hammer Efficiency:** 79% **Drilling Method:** Hollow Stem Auger

Depth (ft)	Graphic	Description	Elevation (ft)	Sample Type	REC % (RQD %)	Blow Counts (N_{60})	Shear Data	Field Tests	Index Tests
0		0.0-0.4' CONCRETE (5.0")	550						
		0.4-12.0' Grey and brown, lean CLAY (CL)							
5			545	X	100	1-2-2 (5)		PP = 0.25 tsf	MC = 31.5%
10			540	X	100	1-2-2 (5)		PP = 0.75 tsf	MC = 28.0%
		12.0-22.0' Brown and grey, lean CLAY (CL)							
15			535	X	100	2-3-3 (8)		PP = 1.25 tsf	MC = 26.4%
20		18.5' - more plastic below 18.5 ft.	530	X	100	3-4-5 (12)		PP = 2.50 tsf	MC = 23.7%
		22.0-27.0' Brown, clayey SAND (SC)							
25			525	X	100	3-3-4 (9)			MC = 26.7%
		27.0-32.0' Brown and grey, lean CLAY (CL), trace sand							
30			520	X	83	3-4-4 (11)		PP = 1.50 tsf	MC = 29.3%
		32.0-40.0' Brown and grey, fat CLAY (CH)							
35				X	100	5-6-7 (17)		PP = 2.00 tsf	MC = 29.2%

N_{60} = (Em/60)Nm N_{60} - Corrected N value for standard 60% SPT efficiency; Em - Measured hammer efficiency in percent; Nm - Observed N-value; (1) = Assumed, (2) = Actual

Coordinate System: **Coordinate Zone:** **Coordinate Proj. Factor:**
Coordinate Datum: **Coordinate Units:** U.S. Survey Feet

* Persons using this information are cautioned that the materials shown are determined by the equipment noted and accuracy of the "log of materials" is limited thereby and by judgement of the operator. THIS INFORMATION IS FOR DESIGN PURPOSES ONLY.

LETTER BOREHOLE_MODOT_20151118.GDT - 1/13/25 08:57 - G:\PROJECT FILES\2024\MG24029 I-270 GAP FROM ROUTE 367 TO LILAC AVENUE\FIELD DATA\ROUTE 367\L-270 ROUTE 367 MODOT GINT LOGS.GPJ

Missouri Department of Transportation
Construction and Materials

BORING NO. A9492-2
Page 2 of 2

Job No.: MG24029 **County:** St. Louis **Route:** Route 367
Design: **Skew:** **Location:** St. Louis County, Missouri
Bent: **Logged By:** J. Stauffer **Operator:** S. Conrad
Station: **Northing:** 1069701.187 **Date of Work:** 05/15/24-05/15/24
Offset: **Easting:** 894809.365 **Depth to Water:** 10.0
Elevation: 550.5 **Requested Northing:** **Depth Hole Open:**
Requested Station: **Requested Easting:** **Time Change:**
Requested Offset: **Equipment:** CME 55LC ,Spit-Spoon Sampler
Requested Elevation: **Location Note:**
Drill No.: UES **Hammer Efficiency:** 79% **Drilling Method:** Hollow Stem Auger

Depth (ft)	Graphic	Description	Elevation (ft)	Sample Type	REC % (RQD %)	Blow Counts (N_{60})	Shear Data	Field Tests	Index Tests
35		32.0-40.0' Brown and grey, fat CLAY (CH) *(continued)*	515						
40				X	100	2-3-4 (9)		PP = 2.00 tsf	MC = 28.3%
		Bottom of borehole at 40.0 feet.							

N_{60} = (Em/60)Nm N_{60} - Corrected N value for standard 60% SPT efficiency; Em - Measured hammer efficiency in percent; Nm - Observed N-value; (1) = Assumed, (2) = Actual

Coordinate System: **Coordinate Zone:** **Coordinate Proj. Factor:**
Coordinate Datum: **Coordinate Units:** U.S. Survey Feet

* Persons using this information are cautioned that the materials shown are determined by the equipment noted and accuracy of the "log of materials" is limited thereby and by judgement of the operator. THIS INFORMATION IS FOR DESIGN PURPOSES ONLY.

LETTER BOREHOLE_MODOT_20151118.GDT - 1/13/25 08:57 - G:\PROJECT FILES\2024\MG24029 I-270 GAP FROM ROUTE 367 TO LILAC AVENUE\FIELD DATA\ROUTE 367\L-270 ROUTE 367 MODOT GINT LOGS.GPJ

STATE OF MISSOURI
RYAN DAVID SHAW
NUMBER PE-2011000388
PROFESSIONAL ENGINEER
THIS SHEET HAS BEEN SIGNED, SEALED AND DATED ELECTRONICALLY

DATE PREPARED 3/27/2026
ROUTE I-270 | STATE MO
DISTRICT BR | SHEET NO. 7
COUNTY ST. LOUIS
JOB NO. JSL0021
CONTRACT ID.
PROJECT NO.
BRIDGE NO. A9492

DESCRIPTION
DATE

MISSOURI HIGHWAYS AND TRANSPORTATION COMMISSION
105 WEST CAPITOL
JEFFERSON CITY, MO 65102
1-888-ASK-MODOT (1-888-275-6636)

HDR Engineering, Inc.
1001 Highlands Plaza Dr
Ste 200
St. Louis, MO 63110-1390
314-425-8300
Certificate of Authority: 000856

BORING DATA

Note: For locations of borings, see Sheet No. 1.

Detailed October 2025
Checked October 2025

Note: This drawing is not to scale. Follow dimensions.

c:\pwworking\central01\d4975497\B_A9492_007_SL0021.dgn 11:09:36 AM 3/27/2026

Missouri Department of Transportation
Construction and Materials

BORING NO. A9492-3
Page 1 of 2

Job No.: MG24029 **County:** St. Louis **Route:** Route 367
Design: **Skew:** **Location:** St. Louis County, Missouri
Bent: **Logged By:** J. Stauffer **Operator:** S. Conrad
Station: **Northing:** 1069647.643 **Date of Work:** 05/14/24-05/15/24
Offset: **Easting:** 894807.68 **Depth to Water:** 15.0
Elevation: 550.9 **Requested Northing:** **Depth Hole Open:**
Requested Station: **Requested Easting:** **Time Change:**
Requested Offset: **Equipment:** CME 55LC ,Split-Spoon Sampler, Shelby Tube
Requested Elevation: **Location Note:**
Drill No.: UES **Hammer Efficiency:** 79% **Drilling Method:** Hollow Stem Auger

Depth (ft)	Graphic	Description	Elevation (ft)	Sample Type	REC % (RQD %)	Blow Counts (N_{60})	Shear Data	Field Tests	Index Tests
0		0.0-0.4' CONCRETE (5.0")	550						
		0.4-15.0' Brown and grey, lean CLAY (CL)			100			PP = 0.50 tsf	MC = 28.9%
		3.0' - UU test performed at 3.0 ft.: shear strength = 0.45 tsf dry density = 91.7 pcf			100			PP = 0.25 tsf	MC = 30.0%
5			545		100			PP = 1.00 tsf	LL = 33 PL = 20 MC = 28.9%
					100		Qu Test Results UCS = 1.92 ksf MC = 27.4% γ_{moist} = 129.4 pcf	PP = 0.75 tsf	MC = 27.4%
10		9.0' - CU test performed at 9.0 ft.: average shear strength = 1.32 tsf dry density = 99.9 pcf	540		100		Qu Test Results UCS = 2.20 ksf MC = 25.2% γ_{moist} = 128.6 pcf	PP = 1.00 tsf	LL = 33 PL = 20 MC = 25.2%
					100		Trixial Results Phi' = 20° c' = 0.1 psf MC = 24.2% γ_{moist} = 125.1 pcf	PP = 1.75 tsf	MC = 31.6%
15	▽				100			PP = 1.50 tsf	
		15.0-19.0' Brown, fat CLAY (CH)	535		100			PP = 2.00 tsf	LL = 52 PL = 17 MC = 25.3%
					100		Qu Test Results UCS = 1.96 ksf MC = 31.6% γ_{moist} = 129.2 pcf	PP = 2.50 tsf	MC = 20.2%
20		19.0-32.0' Brown and grey, lean CLAY (CL)			100		Qu Test Results UCS = 2.32 ksf MC = 25.3% γ_{moist} = 128.6 pcf	PP = 3.50 tsf	MC = 24.3%
			530						
					100	3-4-7 (14)		PP = 2.50 tsf	MC = 22.4%
25			525						
		28.5' - wet below 28.5 ft.			100	2-2-2 (5)		PP = 0.25 tsf	MC = 30.4%
30			520						
		32.0-40.0' Brown and grey, fat CLAY (CH)			78	3-5-6 (14)		PP = 2.00 tsf	MC = 28.0%
35									

N_{60} = (Em/60)Nm N_{60} - Corrected N value for standard 60% SPT efficiency; Em - Measured hammer efficiency in percent; Nm - Observed N-value; (1) = Assumed, (2) = Actual

Coordinate System: **Coordinate Zone:** **Coordinate Proj. Factor:**
Coordinate Datum: **Coordinate Units:** U.S. Survey Feet

* Persons using this information are cautioned that the materials shown are determined by the equipment noted and accuracy of the "log of materials" is limited thereby and by judgement of the operator. THIS INFORMATION IS FOR DESIGN PURPOSES ONLY.

Missouri Department of Transportation
Construction and Materials

BORING NO. A9492-3
Page 2 of 2

Job No.: MG24029 **County:** St. Louis **Route:** Route 367
Design: **Skew:** **Location:** St. Louis County, Missouri
Bent: **Logged By:** J. Stauffer **Operator:** S. Conrad
Station: **Northing:** 1069647.643 **Date of Work:** 05/14/24-05/15/24
Offset: **Easting:** 894807.68 **Depth to Water:** 15.0
Elevation: 550.9 **Requested Northing:** **Depth Hole Open:**
Requested Station: **Requested Easting:** **Time Change:**
Requested Offset: **Equipment:** CME 55LC ,Spit-Spoon Sampler, Shelby Tube
Requested Elevation: **Location Note:**
Drill No.: UES **Hammer Efficiency:** 79% **Drilling Method:** Hollow Stem Auger

Depth (ft)	Graphic	Description	Elevation (ft)	Sample Type	REC % (RQD %)	Blow Counts (N_{60})	Shear Data	Field Tests	Index Tests
35		32.0-40.0' Brown and grey, fat CLAY (CH) *(continued)*	515						
40					100	4-4-6 (13)		PP = 2.00 tsf	MC = 31.8%
		Bottom of borehole at 40.0 feet.							

N_{60} = (Em/60)Nm N_{60} - Corrected N value for standard 60% SPT efficiency; Em - Measured hammer efficiency in percent; Nm - Observed N-value; (1) = Assumed, (2) = Actual

Coordinate System: **Coordinate Zone:** **Coordinate Proj. Factor:**
Coordinate Datum: **Coordinate Units:** U.S. Survey Feet

* Persons using this information are cautioned that the materials shown are determined by the equipment noted and accuracy of the "log of materials" is limited thereby and by judgement of the operator. THIS INFORMATION IS FOR DESIGN PURPOSES ONLY.

LETTER BOREHOLE - MODOT_20151118.GDT - 1/13/25 08:57 - G:\PROJECT FILES\2024\MG24029 I-270 GAP FROM ROUTE 367 TO LILAC AVENUE\FIELD DATA\ROUTE 367\L-270 ROUTE 367 MODOT GINT LOGS.GPJ

STATE OF MISSOURI
RYAN DAVID SHAW
NUMBER PE-2017000388
PROFESSIONAL ENGINEER
THIS SHEET HAS BEEN SIGNED, SEALED AND DATED ELECTRONICALLY

DATE PREPARED 3/27/2026
ROUTE I-270 | STATE MO
DISTRICT BR | SHEET NO. 8
COUNTY ST. LOUIS
JOB NO. JSL0021
CONTRACT ID.
PROJECT NO.
BRIDGE NO. A9492
DESCRIPTION
DATE

MISSOURI HIGHWAYS AND TRANSPORTATION COMMISSION
105 WEST CAPITOL
JEFFERSON CITY, MO 65102
1-888-ASK-MODOT (1-888-275-6636)

HDR Engineering, Inc.
1001 Highlands Plaza Dr
Ste 200
St. Louis, MO 63110-1390
314-425-8300
Certificate of Authority: 000856

BORING DATA

Note: For locations of borings, see Sheet No. 1.

Detailed October 2025
Checked October 2025

Note: This drawing is not to scale. Follow dimensions.

c:\pwworking\central01\d4975497\B_A9492_008_SL0021.dgn 11:10:05 AM 3/27/2026

Missouri Department of Transportation
Construction and Materials

BORING NO. A9489-301
Page 1 of 2

Job No.: MG24029 **County:** St. Louis **Route:** Route 367
Design: **Skew:** **Location:** St. Louis County, Missouri
Bent: **Logged By:** B. Nepal **Operator:** G. Shetley
Station: **Northing:** 1069602.896 **Date of Work:** 05/15/24-05/15/24
Offset: **Easting:** 894804.596 **Depth to Water:** 18.0
Elevation: 552.0 **Requested Northing:** **Depth Hole Open:**
Requested Station: **Requested Easting:** **Time Change:**
Requested Offset: **Equipment:** CME 750Y ,Split-Spoon Sampler, Shelby Tube, NQ
Requested Elevation: **Location Note:**
Drill No.: UES **Hammer Efficiency:** 95% **Drilling Method:** Hollow Stem Auger

Depth (ft)	Graphic	Description	Elevation (ft)	Sample Type	REC % (RQD %)	Blow Counts (N_{60})	Shear Data	Field Tests	Index Tests
0		0.0-0.4' CONCRETE (5.0")							
		0.4-17.0' Grey and brown, lean CLAY (CL)	550						
5				X	100	2-2-3 (8)		PP = 1.00 tsf	MC = 30.8%
			545						
10				X	100	1-2-3 (8)		PP = 0.50 tsf	MC = 28.4%
			540						
15		13.0' - UU test performed at 13.0 ft.: shear strength = 0.89 tsf dry density = 98.5 pcf		■	100			PP = 2.00 tsf	MC = 25.3%
			535						
20		17.0-27.0' Light brown, fat CLAY (CH), mottled black		X	100	2-2-5 (11)		PP = 2.00 tsf	MC = 28.6%
			530						
25				X	100	4-5-6 (17)		PP = 4.50 tsf	MC = 21.9%
			525						
30		27.0-42.0' Light grey and brown, lean CLAY (CL), trace sand		X	100	4-5-5 (16)		PP = 2.00 tsf	MC = 25.8%
			520						
35		33.5' - more plastic below 33.5 ft.		X	100	3-3-5 (13)		PP = 2.00 tsf	MC = 28.8%

N_{60} = (Em/60)Nm N_{60} - Corrected N value for standard 60% SPT efficiency; Em - Measured hammer efficiency in percent; Nm - Observed N-value; (1) = Assumed, (2) = Actual

Coordinate System: **Coordinate Zone:** **Coordinate Proj. Factor:**
Coordinate Datum: **Coordinate Units:** U.S. Survey Feet

* Persons using this information are cautioned that the materials shown are determined by the equipment noted and accuracy of the "log of materials" is limited thereby and by judgement of the operator. THIS INFORMATION IS FOR DESIGN PURPOSES ONLY.

LETTER BOREHOLE - MODOT_20151118.GDT - 1/13/25 08:57 - G:\PROJECT FILES\2024\MG24029 I-270 GAP FROM ROUTE 367 TO LILAC AVENUE\FIELD DATA\ROUTE 367\L-270 ROUTE 367 MODOT GINT LOGS.GPJ

Missouri Department of Transportation
Construction and Materials

BORING NO. A9489-301
Page 2 of 2

Job No.: MG24029 **County:** St. Louis **Route:** Route 367
Design: **Skew:** **Location:** St. Louis County, Missouri
Bent: **Logged By:** B. Nepal **Operator:** G. Shetley
Station: **Northing:** 1069602.896 **Date of Work:** 05/15/24-05/15/24
Offset: **Easting:** 894804.596 **Depth to Water:** 18.0
Elevation: 552.0 **Requested Northing:** **Depth Hole Open:**
Requested Station: **Requested Easting:** **Time Change:**
Requested Offset: **Equipment:** CME 750Y ,Spit-Spoon Sampler, Shelby Tube, NQ
Requested Elevation: **Location Note:**
Drill No.: UES **Hammer Efficiency:** 95% **Drilling Method:** Hollow Stem Auger

Depth (ft)	Graphic	Description	Elevation (ft)	Sample Type	REC % (RQD %)	Blow Counts (N_{60})	Shear Data	Field Tests	Index Tests
35		27.0-42.0' Light grey and brown, lean CLAY (CL), trace sand *(continued)*	515						
40				X	100	3-5-5 (16)		PP = 3.50 tsf	MC = 27.4%
		42.0-49.0' Light brown and grey, fat CLAY (CH)	510						
45				X	100	2-2-4 (10)		PP = 2.25 tsf	MC = 27.7%
		47.0' - with fine sand below 47 ft.	505						
50		49.0-55.0' Weathered SHALE		X	100	30-50/0.3'		PP = 4.00 tsf	MC = 20.4%
			500						
55				X	100	50/0.4'			MC = 14.3%
		55.0-65.0' Brown and grey, with orange, SANDSTONE AND SILTSTONE, moderately weathered, soft, very finely crystalline to aphanitic, slightly to moderately fractured 57.0' - compressive strength = 2,079 psi	495			50 (50)			
60									
			490			53 (52)			
65		Refusal at 53.9 feet. Bottom of borehole at 65.0 feet.							

N_{60} = (Em/60)Nm N_{60} - Corrected N value for standard 60% SPT efficiency; Em - Measured hammer efficiency in percent; Nm - Observed N-value; (1) = Assumed, (2) = Actual

Coordinate System: **Coordinate Zone:** **Coordinate Proj. Factor:**
Coordinate Datum: **Coordinate Units:** U.S. Survey Feet

* Persons using this information are cautioned that the materials shown are determined by the equipment noted and accuracy of the "log of materials" is limited thereby and by judgement of the operator. THIS INFORMATION IS FOR DESIGN PURPOSES ONLY.

LETTER BOREHOLE - MODOT_20151118.GDT - 1/13/25 08:57 - G:\PROJECT FILES\2024\MG24029 I-270 GAP FROM ROUTE 367 TO LILAC AVENUE\FIELD DATA\ROUTE 367\L-270 ROUTE 367 MODOT GINT LOGS.GPJ

BORING DATA

Note: For locations of borings, see Sheet No. 1.

Note: This drawing is not to scale. Follow dimensions.

Sheet No. 9 of 10

Detailed October 2025
Checked October 2025

HDR Engineering, Inc.
1001 Highlands Plaza Dr
Ste 200
St. Louis, MO 63110-1390
314-425-6300
Certificate of Authority: 000856

STATE OF MISSOURI
RYAN DAVID SHAW
NUMBER PE-2011000388
PROFESSIONAL ENGINEER
THIS SHEET HAS BEEN SIGNED, SEALED AND DATED ELECTRONICALLY

DATE PREPARED 3/27/2026
ROUTE I-270 | STATE MO
DISTRICT BR | SHEET NO. 9
COUNTY ST. LOUIS
JOB NO. JSL0021
CONTRACT ID.
PROJECT NO.
BRIDGE NO. A9492

DESCRIPTION | DATE

MISSOURI HIGHWAYS AND TRANSPORTATION COMMISSION
105 WEST CAPITOL
JEFFERSON CITY, MO 65102
1-888-ASK-MODOT (1-888-275-6636)

c:\pwworking\central01\d4975497\B_A9492_009_SL0021.dgn 11:10:38 AM 3/27/2026

Missouri Department of Transportation
Construction and Materials

BORING NO. A9492-4
Page 1 of 2

Job No.: MG24029 **County:** St. Louis **Route:** Route 367
Design: **Skew:** **Location:** St. Louis County, Missouri
Bent: **Logged By:** B. Nepal **Operator:** G. Shetley
Station: **Northing:** 1069561.709 **Date of Work:** 05/14/24-05/14/24
Offset: **Easting:** 894813.343 **Depth to Water:** 18.0
Elevation: 552.9 **Requested Northing:** **Depth Hole Open:**
Requested Station: **Requested Easting:** **Time Change:**
Requested Offset: **Equipment:** CME 750Y ,Split-Spoon Sampler
Requested Elevation: **Location Note:**
Drill No.: UES **Hammer Efficiency:** 95% **Drilling Method:** Hollow Stem Auger

Depth (ft)	Graphic	Description	Elevation (ft)	Sample Type	REC % (RQD %)	Blow Counts (N_{60})	Shear Data	Field Tests	Index Tests
0		0.0-0.2' TOPSOIL (2")							
		0.2-27.0' Grey and brown, lean CLAY (CL), mottled black	550						
5				X	94	5-4-5 (14)		PP = 2.00 tsf	MC = 28.9%
			545						
10				X	100	2-3-3 (10)		PP = 1.50 tsf	MC = 27.1%
		12.0' - brown below 12 feet	540						
15				X	100	1-2-3 (8)		PP = 2.00 tsf	MC = 21.0%
		▽ 18.5' - more plastic below 18.5 feet	535						
20				X	100	2-2-4 (10)		PP = 2.00 tsf	MC = 23.6%
			530						
25				X	100	2-5-5 (16)		PP = 4.00 tsf	MC = 23.8%
		27.0-34.5' Grey, lean to fat CLAY (CL-CH)	525						
30				X	100	3-4-6 (16)		PP = 4.00 tsf	MC = 20.8%
			520						
35				X	100	3-4-5 (14)		PP = 2.50 tsf	MC = 19.0%

N_{60} = (Em/60)Nm N_{60} - Corrected N value for standard 60% SPT efficiency; Em - Measured hammer efficiency in percent; Nm - Observed N-value; (1) = Assumed, (2) = Actual

Coordinate System: **Coordinate Zone:** **Coordinate Proj. Factor:**
Coordinate Datum: **Coordinate Units:** U.S. Survey Feet

* Persons using this information are cautioned that the materials shown are determined by the equipment noted and accuracy of the "log of materials" is limited thereby and by judgement of the operator. THIS INFORMATION IS FOR DESIGN PURPOSES ONLY.

LETTER BOREHOLE_MODOT_20151118.GDT - 1/13/25 08:57 - G:\PROJECT FILES\2024\MG24029 I-270 GAP FROM ROUTE 367 TO LILAC AVENUE\FIELD DATA\ROUTE 367\L-270 ROUTE 367 MODOT GINT LOGS.GPJ

Missouri Department of Transportation
Construction and Materials

BORING NO. A9492-4
Page 2 of 2

Job No.: MG24029 **County:** St. Louis **Route:** Route 367
Design: **Skew:** **Location:** St. Louis County, Missouri
Bent: **Logged By:** B. Nepal **Operator:** G. Shetley
Station: **Northing:** 1069561.709 **Date of Work:** 05/14/24-05/14/24
Offset: **Easting:** 894813.343 **Depth to Water:** 18.0
Elevation: 552.9 **Requested Northing:** **Depth Hole Open:**
Requested Station: **Requested Easting:** **Time Change:**
Requested Offset: **Equipment:** CME 750Y ,Spit-Spoon Sampler
Requested Elevation: **Location Note:**
Drill No.: UES **Hammer Efficiency:** 95% **Drilling Method:** Hollow Stem Auger

Depth (ft)	Graphic	Description	Elevation (ft)	Sample Type	REC % (RQD %)	Blow Counts (N_{60})	Shear Data	Field Tests	Index Tests
35		34.5-37.0' Brown, fine SAND (SP), trace clay *(continued)*							
		37.0-40.0' Light grey and brown, lean CLAY (CL), trace sand	515						
40				X	94	3-4-4 (13)		PP = 1.50 tsf	MC = 20.3%
		Bottom of borehole at 40.0 feet.							

N_{60} = (Em/60)Nm N_{60} - Corrected N value for standard 60% SPT efficiency; Em - Measured hammer efficiency in percent; Nm - Observed N-value; (1) = Assumed, (2) = Actual

Coordinate System: **Coordinate Zone:** **Coordinate Proj. Factor:**
Coordinate Datum: **Coordinate Units:** U.S. Survey Feet

* Persons using this information are cautioned that the materials shown are determined by the equipment noted and accuracy of the "log of materials" is limited thereby and by judgement of the operator. THIS INFORMATION IS FOR DESIGN PURPOSES ONLY.

LETTER BOREHOLE_MODOT_20151118.GDT - 1/13/25 08:57 - G:\PROJECT FILES\2024\MG24029 I-270 GAP FROM ROUTE 367 TO LILAC AVENUE\FIELD DATA\ROUTE 367\L-270 ROUTE 367 MODOT GINT LOGS.GPJ

STATE OF MISSOURI
RYAN DAVID SHAW
NUMBER PE-2011000388
PROFESSIONAL ENGINEER
THIS SHEET HAS BEEN SIGNED, SEALED AND DATED ELECTRONICALLY

DATE PREPARED 3/27/2026
ROUTE I-270 | STATE MO
DISTRICT BR | SHEET NO. 10
COUNTY ST. LOUIS
JOB NO. JSL0021
CONTRACT ID.
PROJECT NO.
BRIDGE NO. A9492
DESCRIPTION
DATE

MISSOURI HIGHWAYS AND TRANSPORTATION COMMISSION
105 WEST CAPITOL
JEFFERSON CITY, MO 65102
1-888-ASK-MODOT (1-888-275-6636)

HDR Engineering, Inc.
1001 Highlands Plaza Dr
Ste 200
St. Louis, MO 63110-1390
314-425-8300
Certificate of Authority: 000856

BORING DATA

Note: For locations of borings, see Sheet No. 1.

Detailed October 2025
Checked October 2025

Note: This drawing is not to scale. Follow dimensions.

c:\pwworking\central01\d4975497\B_A9492_010_SL0021.dgn 11:11:08 AM 3/27/2026

SEC/SUR 34 TWP 47N RGE 7E

(52'-93.5'-42') PRESTRESSED CONCRETE NU-GIRDER SPANS

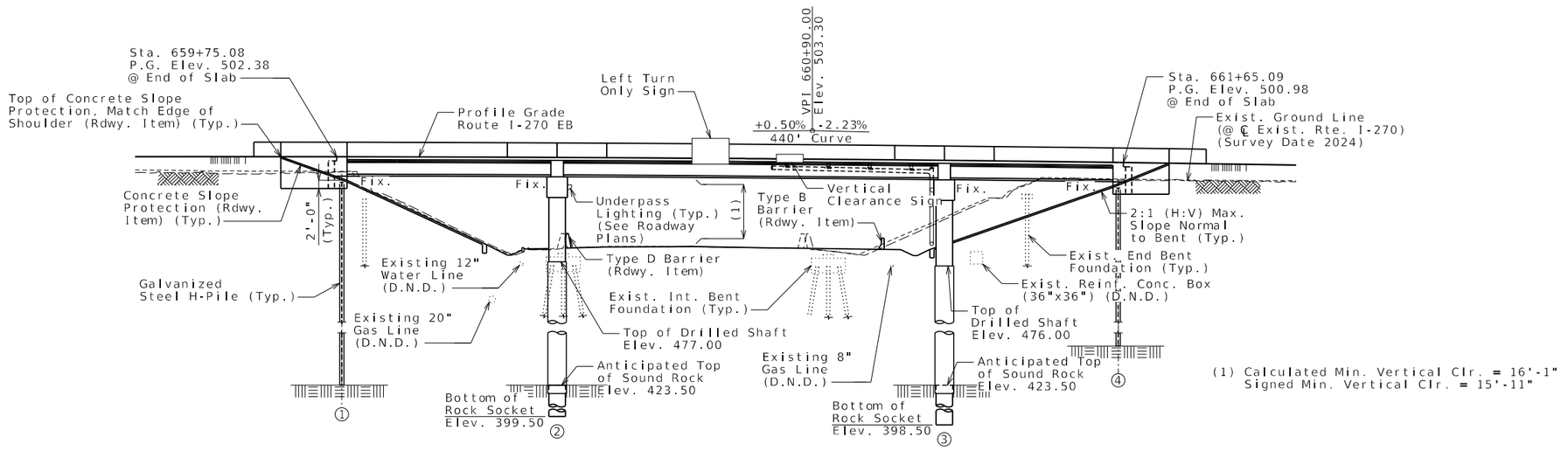

(1) Calculated Min. Vertical Clr. = 16'-1"
Signed Min. Vertical Clr. = 15'-11"

GENERAL ELEVATION

All bents are parallel.

All dimensions are horizontal.

For General Notes, Estimated Quantities, Estimated Quantities for Slab on Concrete NU-Girder and Location Sketch, see Sheet No. 2.

For Foundation Data, see Sheet No. 3.

For Substructure Layout, see Sheet No. 7.

⊕ Indicates location of borings.

Notice and Disclaimer Regarding Boring Log Data

The locations of all subsurface borings for this structure are shown on the plan sheet for this structure. The boring data for all locations indicated, as well as any other boring logs or other factual records of subsurface data and investigations performed by the department for the design of the project, are shown on Sheets No. 44 thru 51 and may be included in the Electronic Bridge Deliverables. They will also be available from the Project Contact upon written request. No greater significance or weight should be given to the boring data depicted on the plan sheets than is given to the subsurface data available from the district or elsewhere.

The Commission does not represent or warrant that any such boring data accurately depicts the conditions to be encountered in constructing this project. A contractor assumes all risks it may encounter in basing its bid prices, time or schedule of performance on the boring data depicted here or those available from the district, or on any other documentation not expressly warranted, which the contractor may obtain from the Commission.

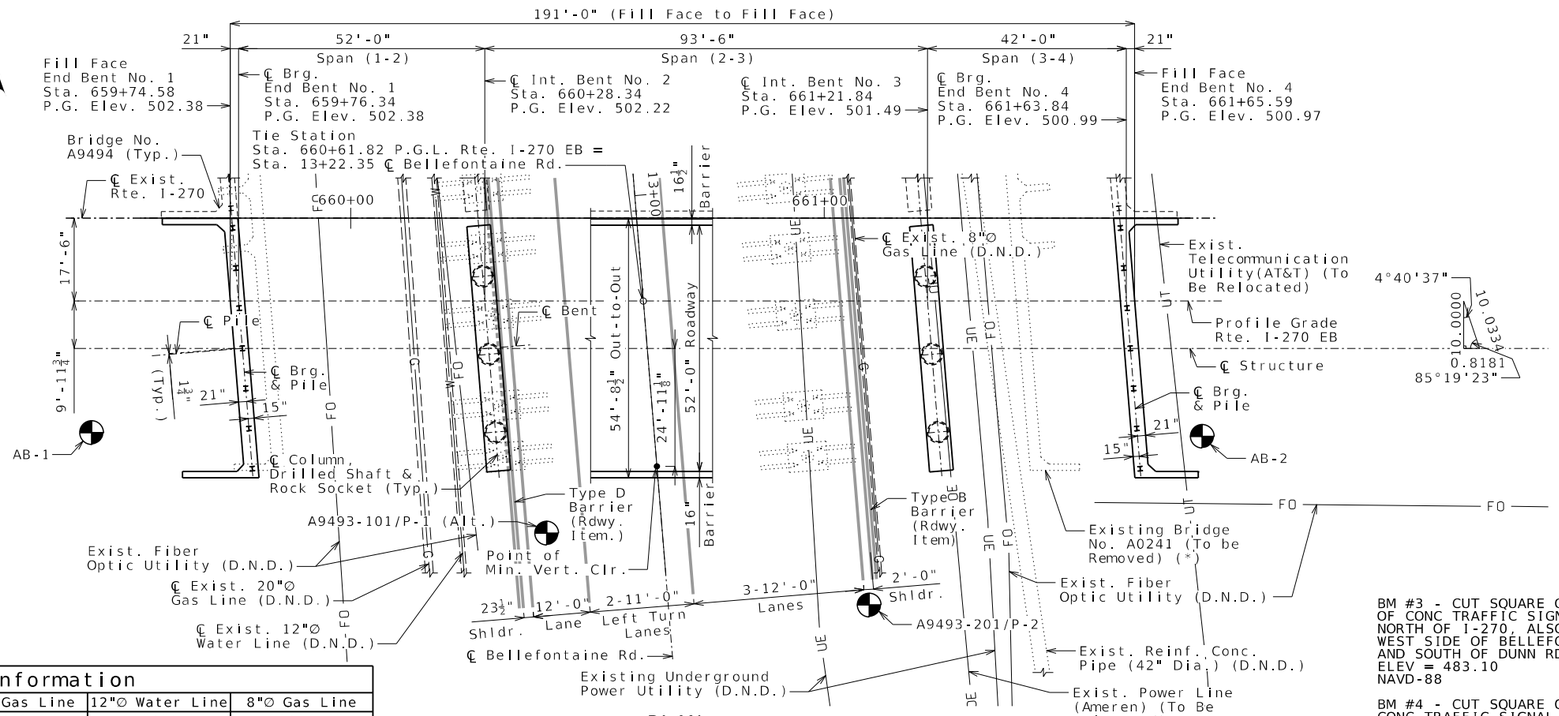

PLAN

(*) To facilitate the installation of the proposed intermediate bent foundations for Bridges No. A9493 & A9494 the contractor may be required to partially remove existing footing concrete. Cost of any partial removal is considered incidental to Removal of Bridges (A0241).

BM #3 - CUT SQUARE ON SOUTH SIDE OF CONC TRAFFIC SIGNAL BASE; NORTH OF I-270, ALSO BEING ON WEST SIDE OF BELLEFONTAINE RD AND SOUTH OF DUNN RD
ELEV = 483.10
NAVD-88

BM #4 - CUT SQUARE ON WEST SIDE OF CONC TRAFFIC SIGNAL BASE; SOUTH OF I-270, ON EAST SIDE BELLEFONTAINE RD ALSO BEING JUST NORTH OF ON RAMP TO I-270 EASTBOUND
ELEV = 483.00
NAVD-88

Utility Pothole Information

		20"∅ Gas Line	12"∅ Water Line	8"∅ Gas Line
Point No. 1 (Near Bridge No. A9493)	Station	660+18.87	660+24.51	661+14.48
	Offset ℄ Exist. Rte. I-270 (ft.)	106.62 Rt.	82.19 Rt.	108.43 Rt.
	Ground Elev. (ft.)	480.42, 480.52	479.69	479.55, 479.42
	Top of Utility Line Elev. (ft.)	464.77	474.27	476.32
Point No. 2 (Near Bridge No. A9494)	Station	660+04.48	660+14.53	661+00.22
	Offset ℄ Exist. Rte. I-270 (ft.)	98.39 Lt.	57.29 Lt.	72.16 Lt.
	Ground Elev. (ft.)	481.14, 480.94	479.18	480.06
	Top of Utility Line Elev. (ft.)	474.21	476.69	477.09

Designed September 2025
Detailed September 2025
Checked September 2025

Note: This drawing is not to scale. Follow dimensions.

Sheet No. 1 of 51

BRIDGE: ROUTE I-270 EB OVER BELLEFONTAINE ROAD

ROUTE I-270 EB FROM ROUTE 367 TO ROUTE H
ABOUT 1.0 MILE EAST OF ROUTE 367
BEGINNING STATION 659+74.58 (PROFILE GRADE EB I-270)

RYAN DAVID SHAW
NUMBER PE-2017000368
STATE OF MISSOURI
PROFESSIONAL ENGINEER
THIS SHEET HAS BEEN SIGNED, SEALED AND DATED ELECTRONICALLY

DATE PREPARED 4/2/2026
ROUTE I-270 | STATE MO
DISTRICT BR | SHEET NO. 1
COUNTY ST. LOUIS
JOB NO. JSL0021
CONTRACT ID.
PROJECT NO.
BRIDGE NO. A9493

DESCRIPTION | DATE

MISSOURI HIGHWAYS AND TRANSPORTATION COMMISSION
105 WEST CAPITOL
JEFFERSON CITY, MO 65102
1-888-ASK-MODOT (1-888-275-6636)

HDR Engineering, Inc.
1001 Highlands Plaza Drive
Suite 200
St. Louis, MO 63110
314-425-8300
Certificate of Authority: 000856

c:\pwworking\central01\d4975499\B_A9493_001_SL0021.dgn 9:18:05 AM 4/2/2026

Estimated Quantities

Item		Substr.	Superstr.	Total
Class 1 Excavation	cu. yard	85		85
Temporary Shoring	lump sum			1
Removal of Bridges (A0241)	lump sum			1
Bridge Approach Slab (Major)	sq. yard		239	239
Drilled Shafts (4 ft. 6 in. Dia.)	linear foot	318		318
Rock Sockets (4 ft. 0 in. Dia.)	linear foot	147		147
Video Camera Inspection	each	6		6
Foundation Inspection Holes	linear foot	207		207
Sonic Logging Testing	each	6		6
Galvanized Structural Steel Piles (12 in.)	linear foot	938		938
Pile Point Reinforcement	each	14		14
Class B Concrete (Substructure)	cu. yard	194.4		194.4
Type D Barrier	linear foot		405	405
Modified Type D Barrier	linear foot		41	41
Slab on Concrete NU-Girder	sq. yard		1155	1155
NU 43, Prestressed Concrete NU-Girder	linear foot		1122	1122
Reinforcing Steel (Galvanized)	pound	87,850		87,850
Conduit System on Structure	lump sum		1	1
Protective Coating - Concrete Bents and Piers (Epoxy)	lump sum	1		1
Fabricated Sign Support Brackets	lump sum		1	1
Slab Drain	each		9	9
Drainage System (On Structure)	lump sum		1	1
Vertical Drain at End Bents	each	2		2
Plain Neoprene Bearing Pad	each		12	12
Laminated Neoprene Bearing Pad	each		24	24

Cost of L4x4 ASTM A709 Grade 36 HP pile anchors and 3/4-inch diameter ASTM F3125 Grade A325 Type 1 bolts, complete in place, will be considered completely covered by the contract unit price for Galvanized Structural Steel Piles (12 in.).

All concrete above the construction joint in the end bents is included in the Estimated Quantities for Slab on Concrete NU-Girder.

All reinforcement in the end bents is included in the Estimated Quantities for Slab on Concrete NU-Girder.

All reinforcement in the intermediate bent concrete diaphragms except reinforcement embedded in the beam cap is included in the Estimated Quantities for Slab on Concrete NU-Girder.

All concrete above the intermediate beam cap is included in the Estimated Quantities for Slab on Concrete NU-Girder.

Estimated Quantities for Slab on Concrete NU-Girder

Item		Total
Class B-2 Concrete	cu. yard	387
Reinforcing Steel (Galvanized)	pound	107,100

The table of Estimated Quantities for Slab on Concrete NU-Girder represents the quantities used by the State in preparing the cost estimate for concrete slabs. The area of the concrete slab will be measured to the nearest square yard longitudinally from end of slab to end of slab and transversely from out to out of bridge slab (or with the horizontal dimensions as shown on the plan of slab). Payment for stay-in-place corrugated steel forms, conventional forms, all concrete and galvanized reinforcing steel will be considered completely covered by the contract unit price for the slab. Variations may be encountered in the estimated quantities but the variations cannot be used for an adjustment in the contract unit price.

Method of forming the slab shall be as shown on the plans and in accordance with Sec 703. All hardware for forming the slab to be left in place as a permanent part of the structure shall be coated in accordance with ASTM A123 or ASTM B633 with a thickness class SC 4 and a finish type I, II or III.

Slab shall be cast-in-place with conventional forms or stay-in-place corrugated steel forms. Precast prestressed panels will not be permitted.

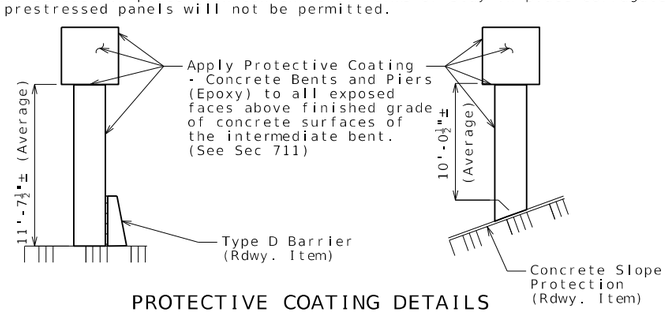

PROTECTIVE COATING DETAILS
AT INTERMEDIATE BENTS NO. 2 & 3

General Notes:

DESIGN SPECIFICATIONS:
2020 AASHTO LRFD Bridge Design Specifications (9th Ed.)
2023 AASHTO Guide Specifications for LRFD Seismic Bridge Design (3rd Ed.)
Seismic Design Category = B (Seismic Details plus Abutment Seismic Design)
Design earthquake response spectral acceleration coefficient at 1.0 second period, S_{D1} = 0.22g
Acceleration Coefficient (effective peak ground acceleration coefficient), A_s = 0.23g

DESIGN LOADING:
Vehicular = HL-93
Future Wearing Surface = 35 lb/sf
Earth = 120 lb/cf
Equivalent Fluid Pressure = 45 lb/cf (Min.)
Superstructure: Simply-Supported, Non-Composite for dead load.
Continuous Composite for live load.

DESIGN UNIT STRESSES:

Class B Concrete (Substructure)	f'c = 3,000 psi
Class B-2 Concrete (Drilled Shafts & Rock Sockets)	f'c = 4,000 psi
Class B-2 Concrete (Superstructure, except Prestressed Girders and Barrier)	f'c = 4,000 psi
Class B-1 Concrete (Barrier)	f'c = 4,000 psi
Reinforcing Steel (ASTM A706 Grade 60)	fy = 60,000 psi
Structural Steel HP Pile (ASTM A709 Grade 50)	fy = 50,000 psi

For prestressed girder stresses, see Sheets No. 20 thru 25.

NEOPRENE PADS:
Neoprene bearing pads shall be 60 durometer and shall be in accordance with Sec 716.

FABRICATED STEEL CONNECTIONS:
Field connections shall be made with ASTM F3125 Grade A325 Type 1 bolts and 13/16-inch diameter holes, except as noted.

JOINT FILLER:
All joint filler shall be in accordance with Sec 1057 for preformed sponge rubber expansion and partition joint filler, except as noted.

REINFORCING STEEL:
Minimum clearance to reinforcing steel shall be 1 1/2", unless otherwise shown.

MBS refers to mechanical bar splices. Mechanical bar splices shall be in accordance with Sec 706 or 710 except that no measurement will be made for mechanical bar splices and they will be considered completely covered by the contract unit price for other items.

GALVANIZED REINFORCING STEEL:
Specification, materials, zinc coating process and construction practice shall be in accordance with ASTM A1094/A1094M-20.

Galvanized reinforcing steel shall not come in contact with uncoated reinforcing steel. Nylon, PVC or Polyethylene spacers shall be used where necessary. Nylon cable ties shall be used to bind the spacers to the reinforcement.

RESIN ANCHORS:
The contractor shall use one of the qualified resin anchor systems in accordance with Sec 1039.

The minimum embedment depth in concrete with f'c = 4,000 psi for the resin anchor systems shall be that required to meet the minimum ultimate pullout strength in accordance with Sec 1039 but shall not be less than 5".

CONCRETE PROTECTIVE COATINGS:
Protective coating for concrete bents and piers (Epoxy) shall be applied as shown on the bridge plans and in accordance with Sec 711.

STAY-IN-PLACE CORRUGATED STEEL FORMS:
Corrugated steel forms, supports, closure elements and accessories shall be in accordance with grade requirement and coating designation G165 of ASTM A653. Complete shop drawings of the permanent steel deck forms shall be required in accordance with Sec 1080.

Corrugations of stay-in-place forms shall be filled with an expanded polystyrene material. The polystyrene material shall be placed in the forms with an adhesive in accordance with the manufacturer's recommendations.

Form sheets shall not rest directly on the top of girder flanges. Sheets shall be securely fastened to form supports with a minimum bearing length of one inch on each end. Form supports shall be placed in direct contact with the flange. Welding on or drilling holes in the girder flanges will not be permitted. All steel fabrication and construction shall in accordance with Sec 1080 and 712. Certified field welders will not be required for welding of the form supports.

The design of stay-in-place corrugated steel forms is per manufacturer which shall be in accordance with Sec 703 for false work and forms. Maximum actual weight of corrugated steel forms allowed shall be 4 psf assumed for girder loading.

TRAFFIC HANDLING:
1) Close all I-270 lanes on the existing EB structure (A0241).
2) Reduce WB & EB I-270 traffic to two lanes and shift EB traffic onto existing WB structure (A0241) utilizing a temporary crossover with barrier system.
3) Maintain two lanes of traffic in each direction on existing WB structure (A0241) while construction on Bridge No. A9493 completes (all bridge work, except for the median portion of the bridge approach slab and Modified Type D barrier).
4) Shift two lanes of EB traffic onto new EB Bridge No. A9493 and maintain two lanes of WB traffic on existing WB structure (A0241) while the remainder of the Bridge No. A9493 construction completes (median portion of bridge approach slab and Modified Type D barrier).
5) Close all I-270 lanes on the existing WB structure (A0241).
6) Shift WB & EB I-270 traffic onto new EB Bridge No. A9493. Maintain two lanes of traffic in each direction on new Bridge No. A9493 while construction of Bridge No. A9494 completes.

See roadway plans for traffic control and Sheets No. 4 thru 6 for staged construction details.

Vertical clearance for Bellefontaine Rd. traffic during construction shall be 15'-6" minimum over all through lanes of traffic.

The Contractor shall maintain a minimum of two NB thru lanes, one SB thru lane and one stacked left turn lane for traffic on Bellefontaine Rd. during construction.

MISCELLANEOUS:
High strength bolts, nuts and washers will be sampled for quality assurance as specified in Sec 106.

Outline of existing work is indicated by light dashed lines. Heavy lines indicate new work.

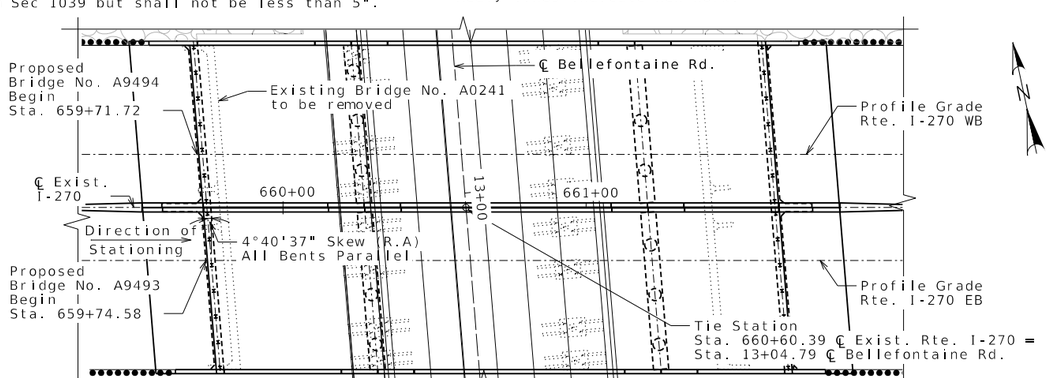

LOCATION SKETCH

RYAN DAVID SHAW NUMBER PE-2017000368 PROFESSIONAL ENGINEER
STATE OF MISSOURI
THIS SHEET HAS BEEN SIGNED, SEALED AND DATED ELECTRONICALLY

DATE PREPARED 4/2/2026
ROUTE I-270 | STATE MO
DISTRICT BR | SHEET NO. 2
COUNTY ST. LOUIS
JOB NO. JSL0021
CONTRACT ID.
PROJECT NO.
BRIDGE NO. A9493

DESCRIPTION | DATE

MISSOURI HIGHWAYS AND TRANSPORTATION COMMISSION
105 WEST CAPITOL
JEFFERSON CITY, MO 65102
1-888-ASK-MODOT (1-888-275-6636)
HDR Engineering, Inc.
1001 Highlands Plaza Drive
Suite 200
St. Louis, MO 63110
314-425-8300
Certificate of Authority: 000856

Detailed September 2025
Checked September 2025

Note: This drawing is not to scale. Follow dimensions.

c:\pwworking\central01\d4975499\B_A9493_002_SL0021.dgn 9:18:16 AM 4/2/2026

Foundation Data

Type	Design Data		Bent Number 1	2	3	4
Load Bearing Pile	Pile Type and Size		HP 12x53			HP 12x53
	Number	ea	7			7
	Approximate Length Per Each	ft	73			61
	Pile Point Reinforcement	ea	All			All
	Min. Galvanized Penetration (Elev.)	ft	Full Length			Full Length
	Minimum Tip Penetration (Elev.)	ft	--			--
	Criteria for Min. Tip Penetration		(*)			(*)
	Pile Driving Verification Method		DF			DF
	Resistance Factor		0.4			0.4
	Minimum Nominal Axial Compressive Resistance	kip	497			439
Rock Socket	Number	ea		3	3	
	Layer 1 Foundation Material			Weak Rock	Weak Rock	
	Layer 1 Elevation Range	ft		423.5-410	423.5-405	
	Layer 1 Minimum Nominal Axial Compressive Resistance (Side Resistance)	ksf		2.0	2.0	
	Layer 2 Foundation Material			Weak Rock	Weak Rock	
	Layer 2 Elevation Range	ft		410-399.5	405-398.5	
	Layer 2 Minimum Nominal Axial Compressive Resistance (Side Resistance)	ksf		18.6	30.0	
	Minimum Nominal Axial Compressive Resistance (Tip Resistance)	ksf		237	255	

DF = FHWA-modified Gates Dynamic Pile Formula

(*) HP piles are anticipated to be driven to refusal on rock. Review all borings for depth of rock and restrict driving as appropriate to comply with hard rock driving criteria in accordance with Sec 702. When pile refusal on rock occurs, as approved by the engineer, the minimum nominal axial compressive resistance is verified and no additional pile driving verification method is required.

Load Bearing Pile:

$$\text{Minimum Nominal Axial Compressive Resistance} = \frac{\text{Maximum Factored Loads}}{\text{Resistance Factor}}$$

Rock Socket (Drilled Shafts):

$$\text{Minimum Nominal Axial Compressive Resistance (Side Resistance + Tip Resistance)} = \frac{\text{Maximum Factored Loads}}{\text{Resistance Factors}}$$

Pile point reinforcement need not be galvanized. Shop drawings will not be required for pile point reinforcement.

The contractor shall make every effort to achieve the minimum galvanized penetration (elevation) shown on the plans for all piles. Deviations in penetration less than 5 feet of the minimum will be considered acceptable provided the contractor makes the necessary corrections to ensure the minimum penetration is achieved on subsequent piles.

FOUNDATION DATA

Detailed September 2025
Checked September 2025

Note: This drawing is not to scale. Follow dimensions.

STATE OF MISSOURI
RYAN DAVID SHAW
NUMBER PE-2017003368
PROFESSIONAL ENGINEER
THIS SHEET HAS BEEN SIGNED, SEALED AND DATED ELECTRONICALLY

DATE PREPARED 4/2/2026

ROUTE	STATE
I-270	MO
DISTRICT	SHEET NO.
BR	3

COUNTY ST. LOUIS

JOB NO. JSL0021

CONTRACT ID.

PROJECT NO.

BRIDGE NO. A9493

DESCRIPTION	DATE

MISSOURI HIGHWAYS AND TRANSPORTATION COMMISSION
105 WEST CAPITOL
JEFFERSON CITY, MO 65102
1-888-ASK-MODOT (1-888-275-6636)

HDR Engineering, Inc.
1001 Highlands Plaza Drive
Suite 200
St. Louis, MO 63110
314-425-8300
Certificate of Authority: 000856

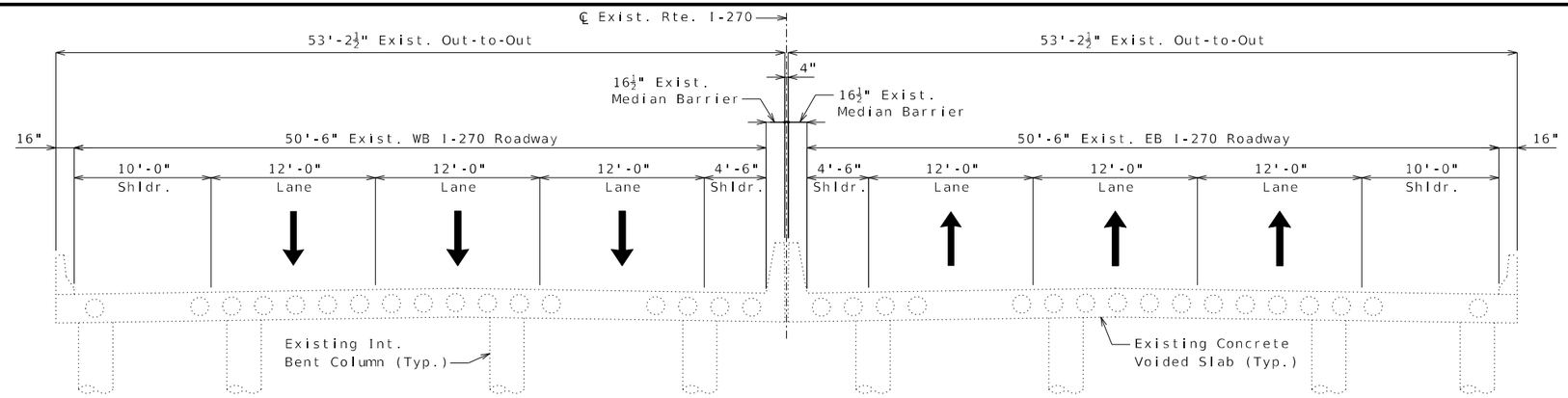

EXISTING CONFIGURATION
(Bridge No. A0241)

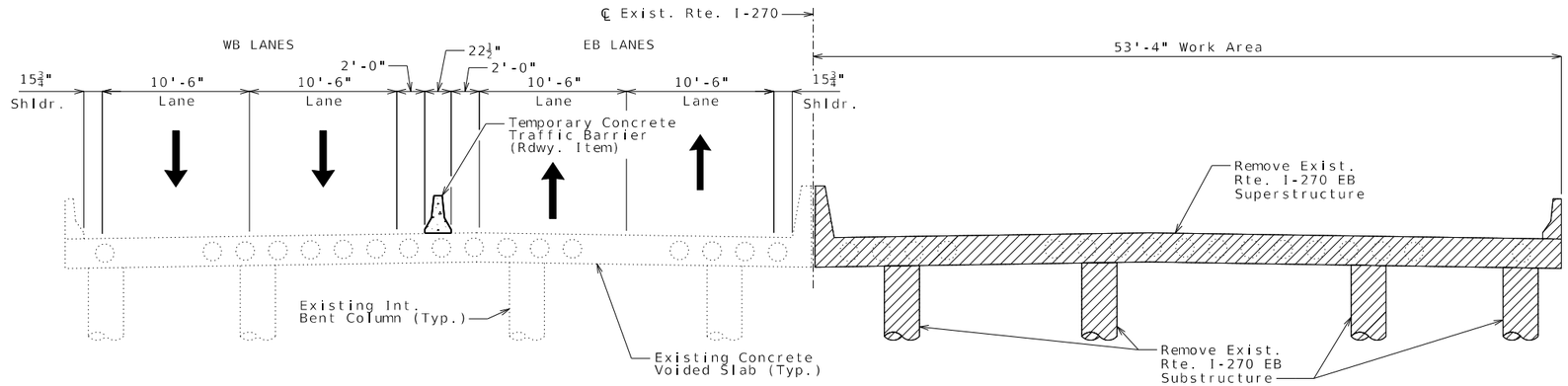

PHASE 1A REMOVAL

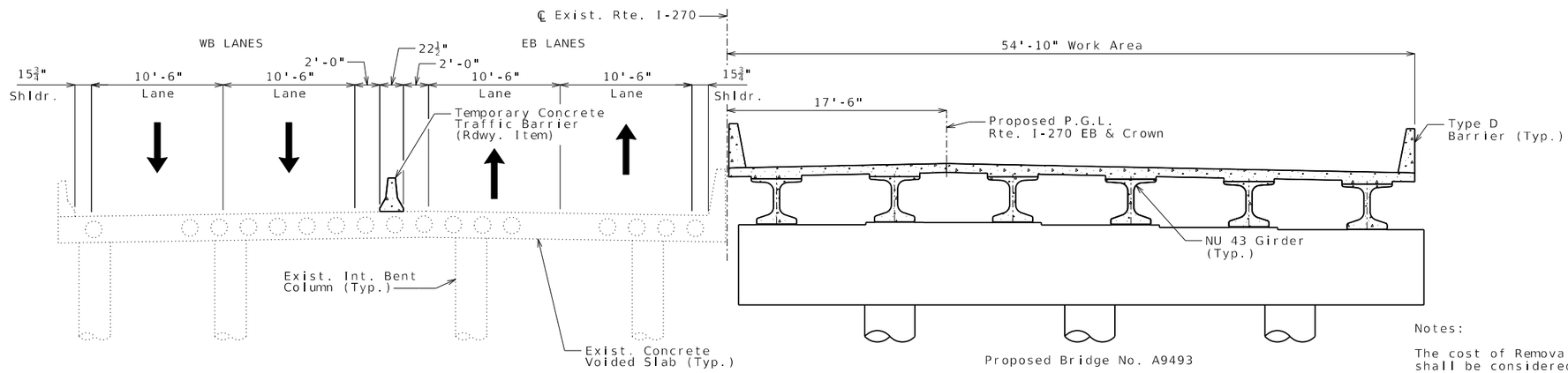

PHASE 1A CONSTRUCTION

STAGING PLANS

Notes:

The cost of Removal of Bridges (A0241) shall be considered completely covered by the contract lump sum price for Removal of Bridges (A0241) for Bridge No. A9493.

Denotes Removal

RYAN DAVID SHAW
NUMBER PE-2017000368
STATE OF MISSOURI
PROFESSIONAL ENGINEER
THIS SHEET WAS SIGNED, SEALED AND DATED ELECTRONICALLY

DATE PREPARED 4/2/2026
ROUTE I-270 | STATE MO
DISTRICT BR | SHEET NO. 4
COUNTY ST. LOUIS
JOB NO. JSL0021
CONTRACT ID.
PROJECT NO.
BRIDGE NO. A9493

DESCRIPTION
DATE

MISSOURI HIGHWAYS AND TRANSPORTATION COMMISSION
105 WEST CAPITOL
JEFFERSON CITY, MO 65102
1-888-ASK-MODOT (1-888-275-6636)

HDR Engineering, Inc.
1001 Highlands Plaza Drive
Suite 200
St. Louis, MO 63110
314-425-8300
Certificate of Authority: 000856

Detailed September 2025
Checked September 2025

Note: This drawing is not to scale. Follow dimensions.

c:\pwworking\central01\d4975499\B_A9493_004_SL0021.dgn 9:18:30 AM 4/2/2026

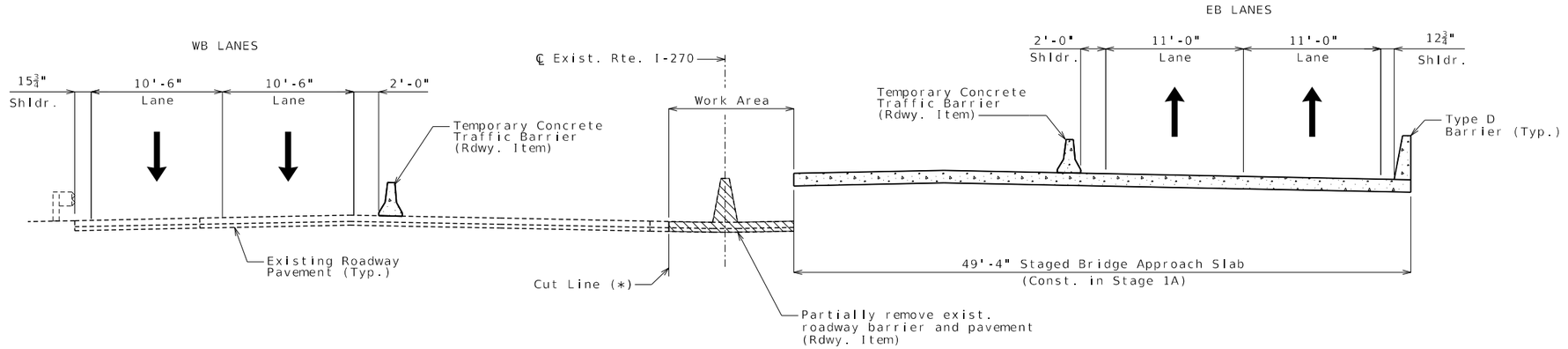

(*) Contractor is responsible for the stability of the existing bridge during partial removal. Location of the cut line to be determined by the Contractor.

PHASE 1B REMOVAL

(Shown near End Bent No. 1, End Bent No. 4 similar)

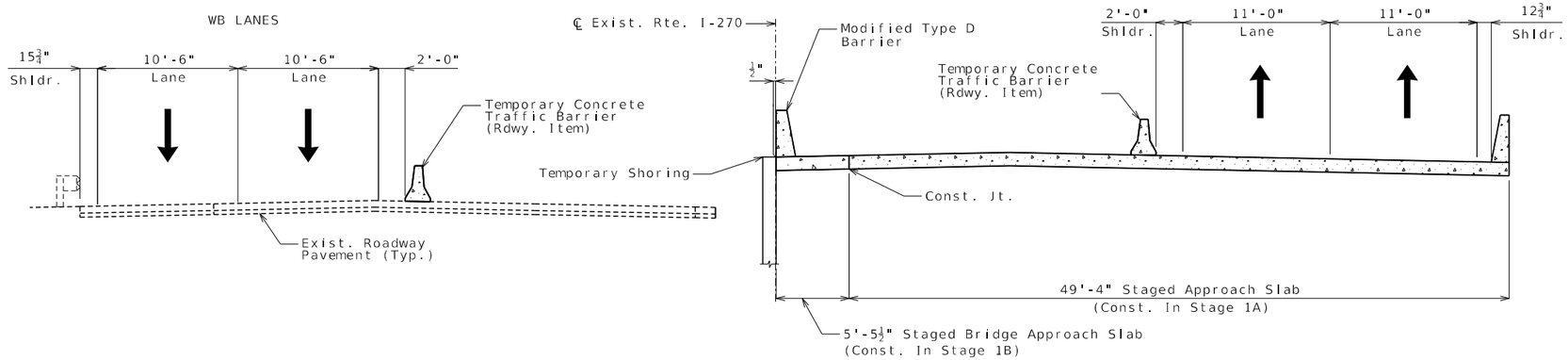

PHASE 1B CONSTRUCTION

(Shown near End Bent No. 1, End Bent No. 4 similar)

Notes:

The cost of Removal of Bridges (A0241) shall be considered completely covered by the contract lump sum price for Removal of Bridges (A0241) for Bridge No. A9493.

For Approach Slab Details, see Sheet No. 38.

Denotes Removal

STAGING PLANS

Detailed September 2025
Checked September 2025

Note: This drawing is not to scale. Follow dimensions.

RYAN DAVID SHAW
NUMBER PE-2017000388
PROFESSIONAL ENGINEER
STATE OF MISSOURI
THIS SHEET WAS SIGNED, SEALED AND DATED ELECTRONICALLY

DATE PREPARED 4/2/2026
ROUTE I-270 | STATE MO
DISTRICT BR | SHEET NO. 5
COUNTY ST. LOUIS
JOB NO. JSL0021
CONTRACT ID.
PROJECT NO.
BRIDGE NO. A9493

DESCRIPTION | DATE

MISSOURI HIGHWAYS AND TRANSPORTATION COMMISSION
105 WEST CAPITOL
JEFFERSON CITY, MO 65102
1-888-ASK-MODOT (1-888-275-6636)

HDR Engineering, Inc.
1001 Highlands Plaza Drive
Suite 200
St. Louis, MO 63110
314-425-8300
Certificate of Authority: 000856

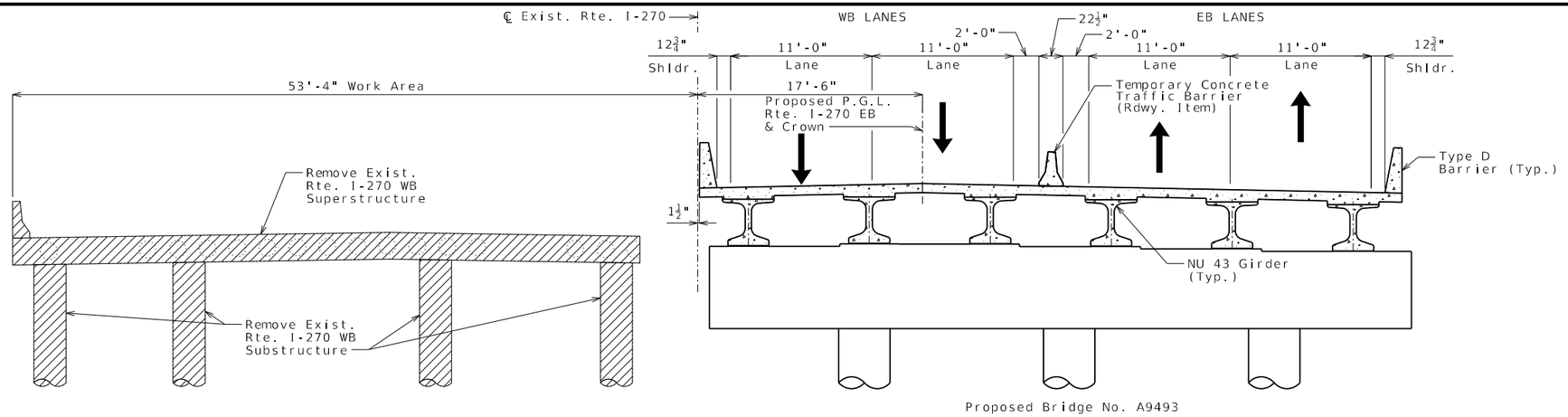

PHASE 2 REMOVAL

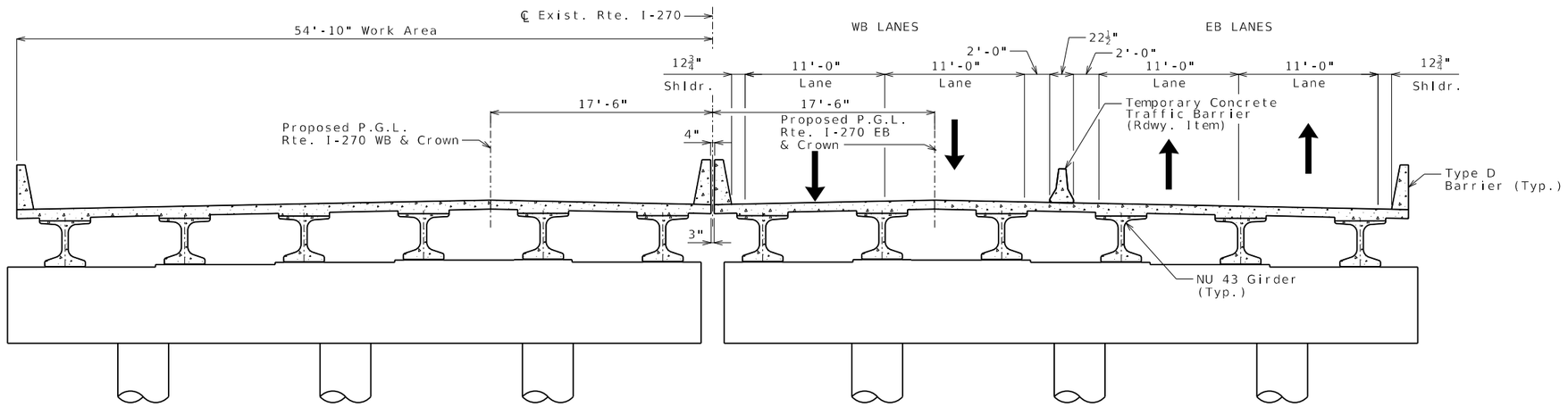

PHASE 2 CONSTRUCTION

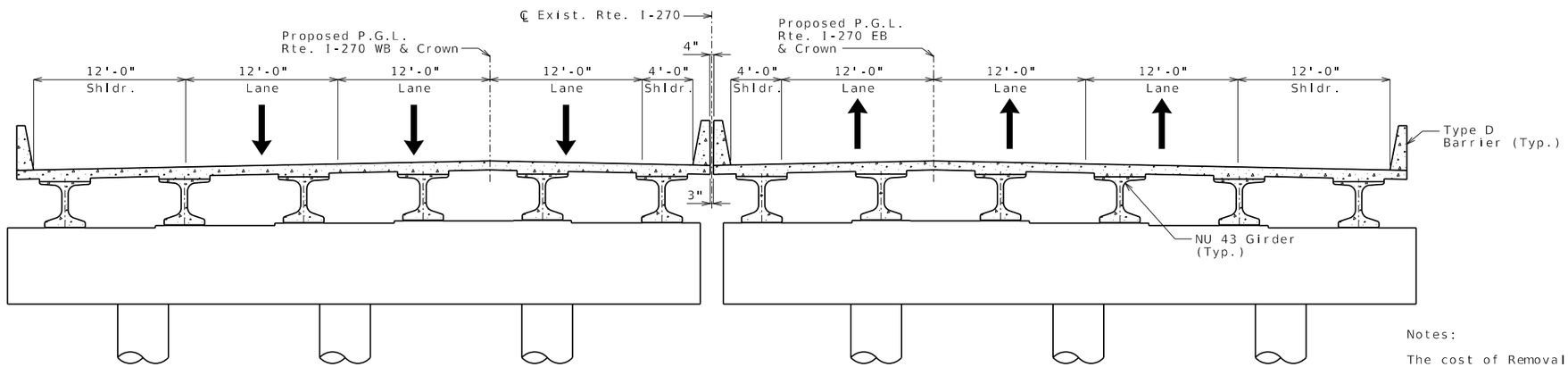

FINAL CONFIGURATION

STAGING PLANS

Notes:

The cost of Removal of Bridges (A0241) shall be considered completely covered by the contract lump sum price for Removal of Bridges (A0241) for Bridge No. A9493.

Denotes Removal

RYAN DAVID SHAW
NUMBER PE-2017003368
PROFESSIONAL ENGINEER
STATE OF MISSOURI
THIS SHEET HAS BEEN SIGNED, SEALED AND DATED ELECTRONICALLY

DATE PREPARED 4/2/2026

ROUTE	STATE
I-270	MO
DISTRICT	SHEET NO.
BR	6

COUNTY: ST. LOUIS
JOB NO.: JSL0021
CONTRACT ID.:
PROJECT NO.:
BRIDGE NO.: A9493

DESCRIPTION | DATE

MISSOURI HIGHWAYS AND TRANSPORTATION COMMISSION
105 WEST CAPITOL
JEFFERSON CITY, MO 65102
1-888-ASK-MODOT (1-888-275-6636)

HDR Engineering, Inc.
1001 Highlands Plaza Drive
Suite 200
St. Louis, MO 63110
314-425-6300
Certificate of Authority: 000856

Detailed September 2025
Checked September 2025

Note: This drawing is not to scale. Follow dimensions.

c:\pwworking\central01\d4975499\B_A9493_006_SL0021.dgn 9:18:43 AM 4/2/2026

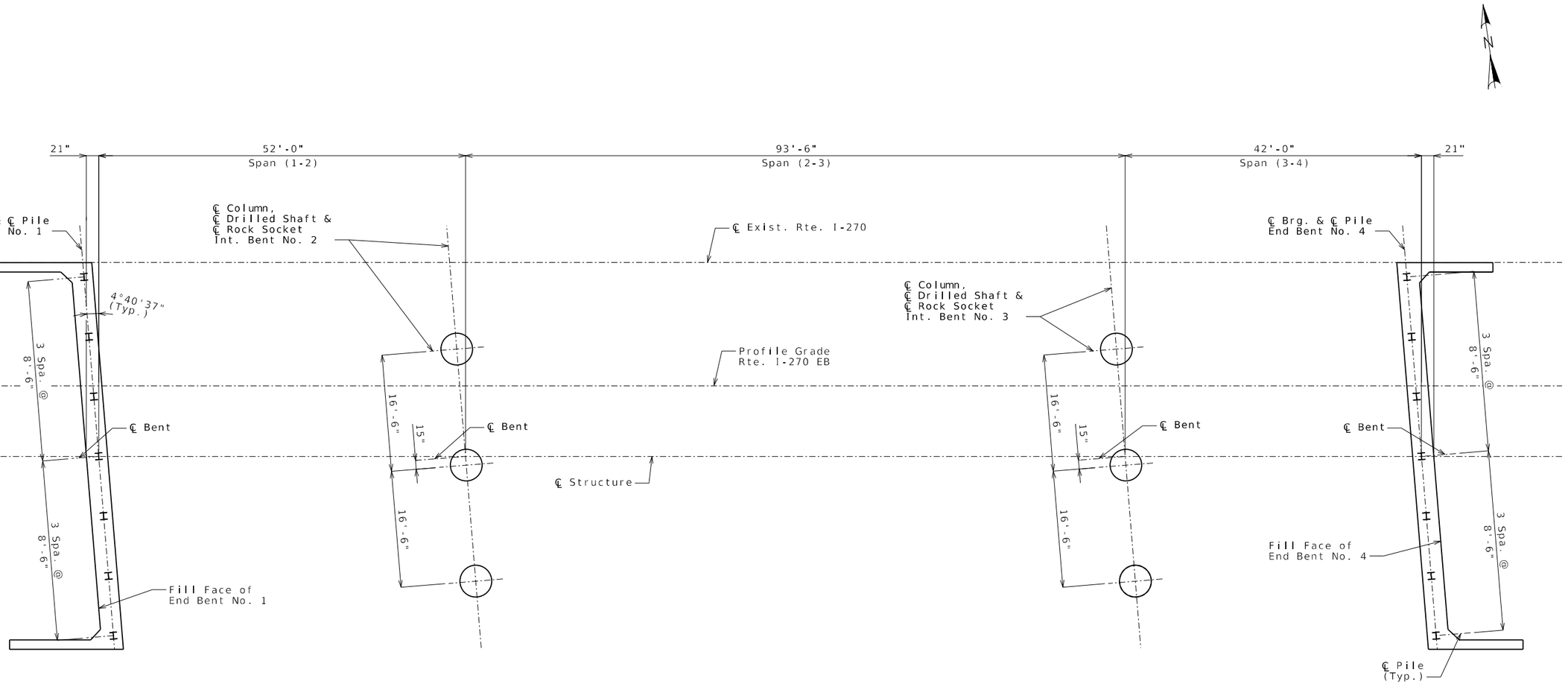

PART PLAN SHOWING FOUNDATION SPACING

Notes:

For Foundation Data, see Sheet No. 3.

For Staging Plans, see Sheets No. 4 thru 6.

For End Bent No. 1 Details, see Sheets No. 8 thru 10.

For Intermediate Bent No. 2 Details, see Sheets No. 12 & 13.

For Intermediate Bent No. 3 Details, see Sheets No. 14 & 15.

For End Bent No. 4 Details, see Sheets No. 16 thru 18.

SUBSTRUCTURE LAYOUT

Detailed September 2025
Checked September 2025

Note: This drawing is not to scale. Follow dimensions.

RYAN DAVID SHAW
NUMBER PE-2017000368
PROFESSIONAL ENGINEER
STATE OF MISSOURI
THIS SHEET HAS BEEN SIGNED, SEALED AND DATED ELECTRONICALLY

DATE PREPARED
4/2/2026

ROUTE	STATE
I-270	MO

DISTRICT	SHEET NO.
BR	7

COUNTY
ST. LOUIS

JOB NO.
JSL0021

CONTRACT ID.

PROJECT NO.

BRIDGE NO.
A9493

DESCRIPTION | DATE

MISSOURI HIGHWAYS AND TRANSPORTATION COMMISSION
105 WEST CAPITOL
JEFFERSON CITY, MO 65102
1-888-ASK-MODOT (1-888-275-6636)

HDR Engineering, Inc.
1001 Highlands Plaza Drive
Suite 200
St. Louis, MO 63110
314-425-8300
Certificate of Authority: 000856

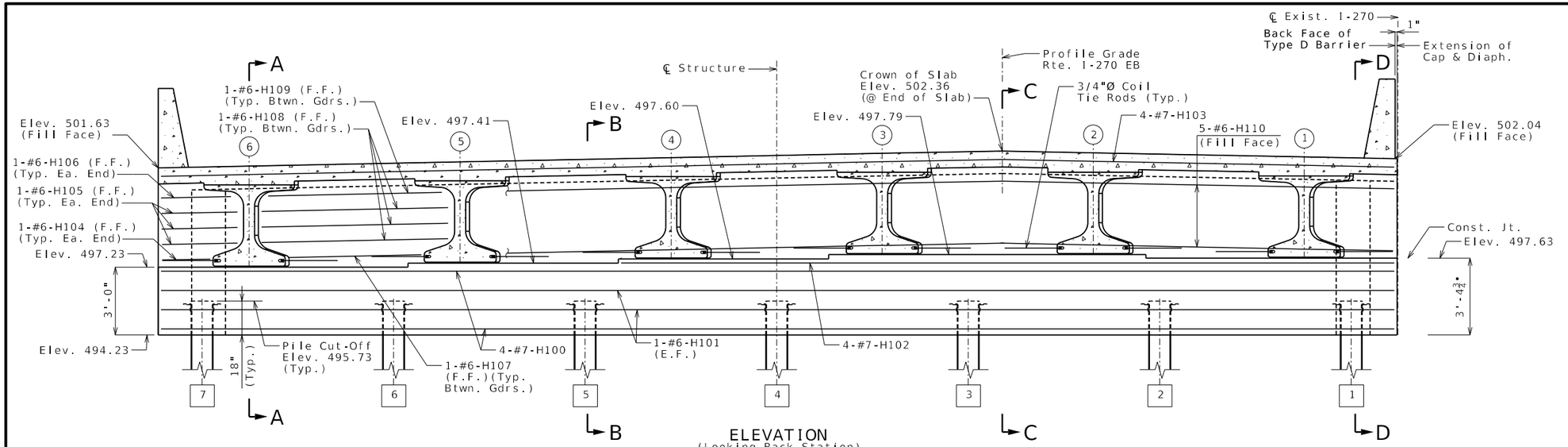

ELEVATION
(Looking Back Station)

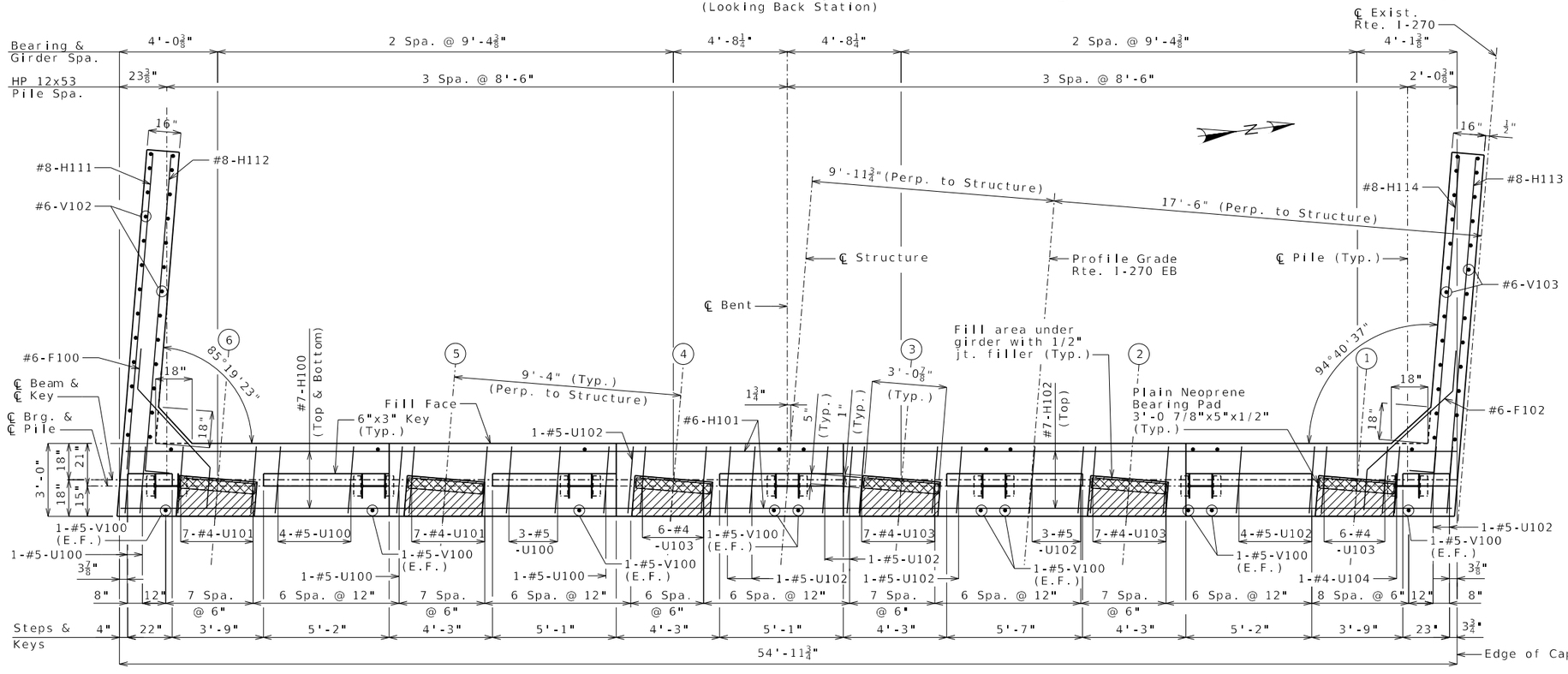

PLAN OF BEAM
(Horizontal dimensions are measured along ℄ Piles and ℄ Brg.)

Notes:

Work this sheet with Sheets No. 9 & 10.

For Sections A-A thru C-C, see Sheet No. 9.

For Section D-D, see Sheet No. 10.

For Key Details, Pile Anchor Details and Steel Pile Splice Detail, see Sheet No. 10.

For location of coil tie rods, see Sheets No. 20 & 21.

Reinforcing steel shall be shifted to clear piles. U-bars shall clear piles by at least 1 1/2-inches.

Strands at ends of girders shall be field bent or, if necessary, cut in field to maintain 1 1/2-inch minimum clearance to fill face of end bent.

All concrete in the end bent above top of beam and below top of slab shall be Class B-2.

#6-F100 and #6-F102 bars shall be bent in field to clear girders.

The U-bars, sets of V-bars,and #5-H120 bars shall be placed parallel to centerline of roadway.

For details and reinforcement of barriers at end bent, see Sheet No. 35.

E.F. Denotes Each Face.

F.F. Denotes Front Face.

(1) - Denotes girder number.

Edge of Cap [1] - Denotes pile number.

Substructure Quantity Table for End Bent No. 1

Item		Quantity
Class 1 Excavation	cu. yard	45
Galvanized Structural Steel Piles (12 in.)	linear foot	511
Pile Point Reinforcement	each	7
Class B Concrete (Substructure)	cu. yard	24.5

These quantities are included in the Estimated Quantities table on Sheet No. 2.

END BENT NO. 1 DETAILS

Detailed September 2025
Checked September 2025

Note: This drawing is not to scale. Follow dimensions.

RYAN DAVID SHAW
ENGINEER
PE-2017000368
STATE OF MISSOURI
PROFESSIONAL ENGINEER
THIS SHEET HAS BEEN SIGNED, SEALED AND DATED ELECTRONICALLY

DATE PREPARED 4/2/2026

ROUTE	STATE
I-270	MO
DISTRICT	SHEET NO.
BR	8

COUNTY: ST. LOUIS
JOB NO.: JSL0021
CONTRACT ID.:
PROJECT NO.:
BRIDGE NO.: A9493

DESCRIPTION | DATE

MISSOURI HIGHWAYS AND TRANSPORTATION COMMISSION
105 WEST CAPITOL
JEFFERSON CITY, MO 65102
1-888-ASK-MODOT (1-888-275-6636)
HDR Engineering, Inc.
1001 Highlands Plaza Drive
Suite 200
St. Louis, MO 63110
314-425-8300
Certificate of Authority: 000856

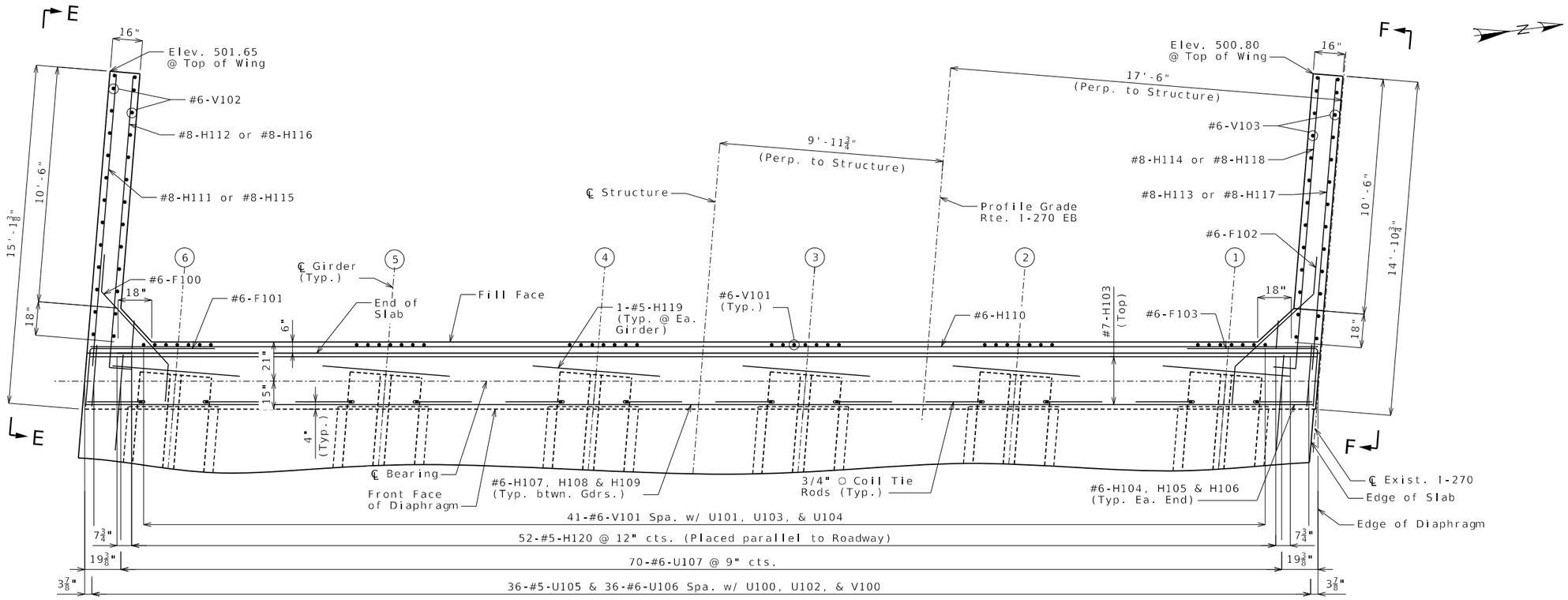

PART PLAN

(Horizontal dimensions are measured along ℄ Brg.)

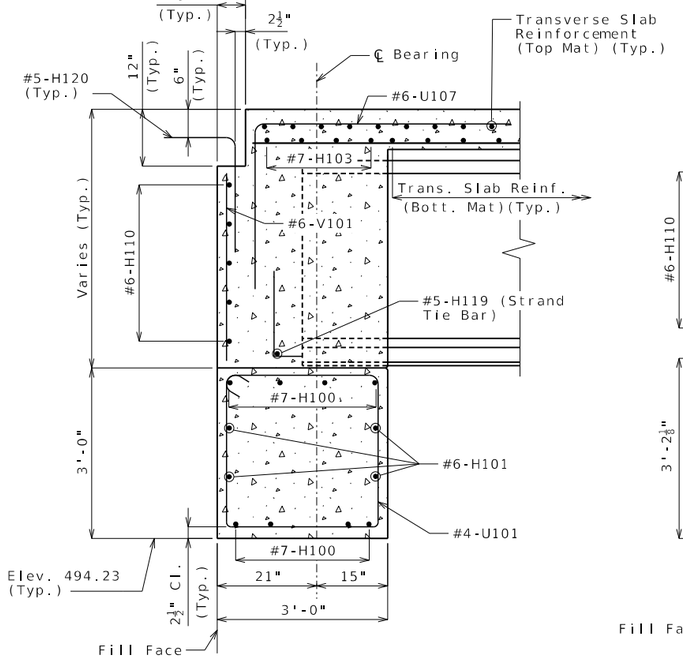

SECTION A-A

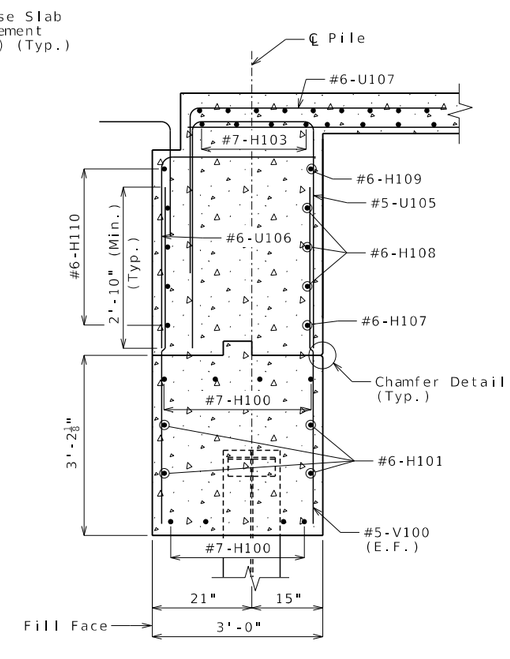

SECTION B-B

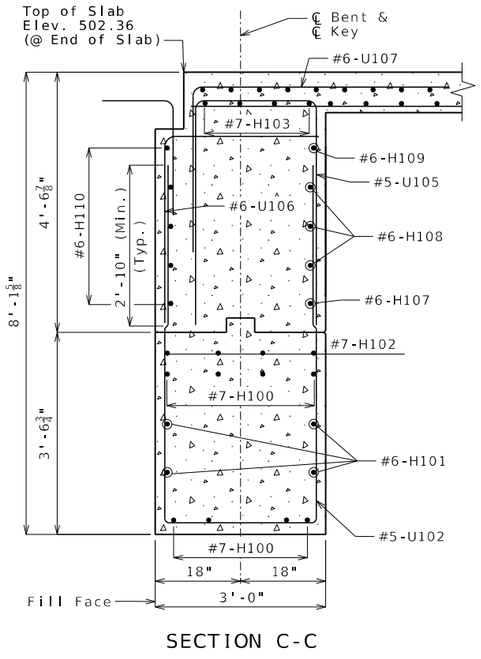

SECTION C-C

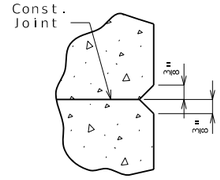

CHAMFER DETAIL

Notes:

Work this sheet with Sheets No. 8 & 10.

#6-F100 and #6-F102 bars shall be bent in the field to clear girders.

The U-bars and #5-H120 bars shall be placed parallel to centerline roadway.

For location of Sections A-A thru C-C, see Sheet No. 8.

For Section D-D, see Sheet No. 10.

For Elevations E-E and F-F, see Sheet No. 10.

For Key details, Pile Anchor details and Pile Splice details, see Sheet No. 10.

For location of coil tie rods and #5-H119 (strand tie bar), see Sheets No. 20 & 21.

For details and reinforcement of barriers at end bent, see Sheet No. 35.

E.F. Denotes Each Face.

(1) - Denotes girder number.

END BENT NO. 1 DETAILS

Detailed September 2025
Checked September 2025

Note: This drawing is not to scale. Follow dimensions.

STATE OF MISSOURI
RYAN DAVID SHAW
NUMBER PE-2011000388
PROFESSIONAL ENGINEER
THIS SHEET HAS BEEN SIGNED, SEALED AND DATED ELECTRONICALLY

DATE PREPARED 4/2/2026

ROUTE	STATE
I-270	MO
DISTRICT	SHEET NO.
BR	9

COUNTY: ST. LOUIS
JOB NO.: JSL0021
CONTRACT ID.:
PROJECT NO.:
BRIDGE NO.: A9493

DESCRIPTION | DATE

MISSOURI HIGHWAYS AND TRANSPORTATION COMMISSION
105 WEST CAPITOL
JEFFERSON CITY, MO 65102
1-888-ASK-MODOT (1-888-275-6636)

HDR Engineering, Inc.
1001 Highlands Plaza Drive
Suite 200
St. Louis, MO 63110
314-425-8300
Certificate of Authority: 000856

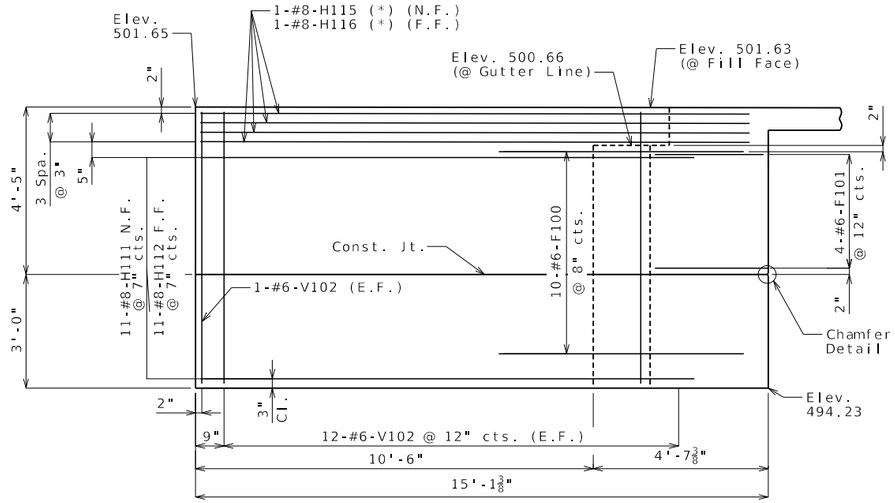

ELEVATION E-E

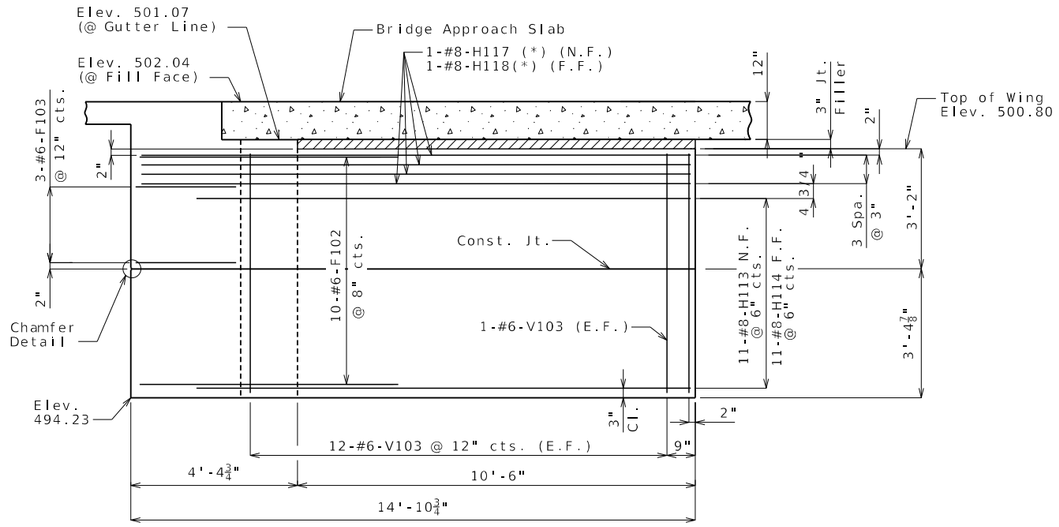

ELEVATION F-F

Notes:

All dimensions and elevations given at outside face of wing unless otherwise noted.

The #6-F100 and F102 bars shall be bent in the field to clear girders.

(*) Place with grade.

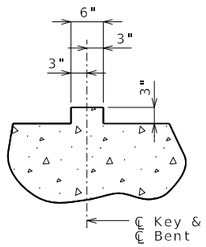

TYPICAL SECTION THRU KEY

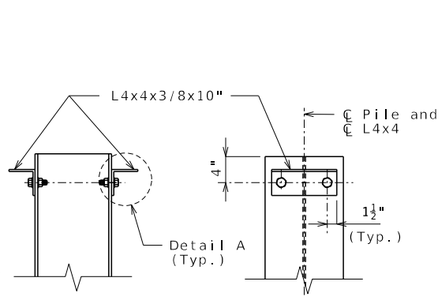

DETAILS OF HP PILE ANCHORS

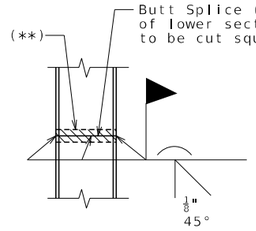

STEEL PILE SPLICE

(If required)

(**) Galvanizing material shall be omitted or removed one inch clear of weld locations in accordance with Sec 702.

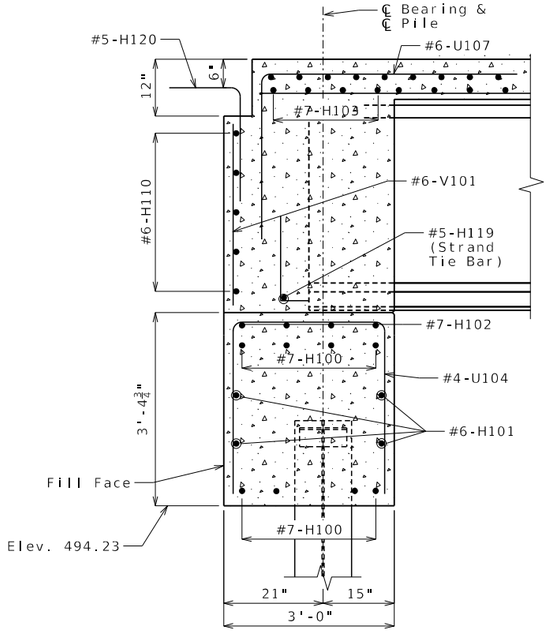

SECTION D-D

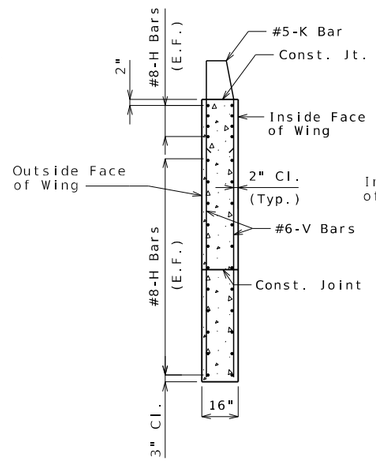

TYPICAL SECTION THRU RIGHT WING

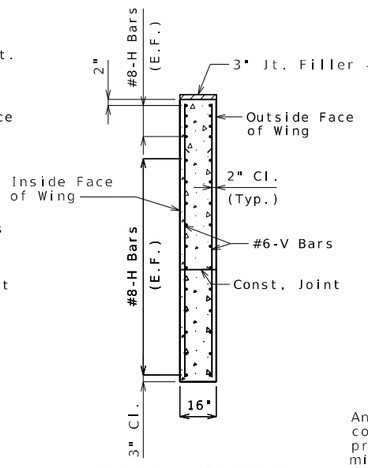

TYPICAL SECTION THRU LEFT WING

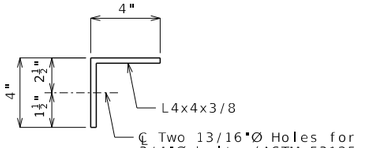

DETAIL A

Angles shall be coated with a minimum of two coats of non-aluminum epoxy mastic primer to provide a dry film thickness of 4 mils minimum, 8 mils maximum, or galvanized in accordance with Sec 1081. Bolts, washers and nuts shall be galvanized in accordance with AASHTO M 232 (ASTM A153), Class C.

Notes:

Work this sheet with Sheets No. 8 & 9.

For Chamfer Detail, see Sheet No. 9.

Seal joint between vertical faces of end bent beams and diaphragms of Bridge No. A9493 with the vertical faces of Bridge No. A9494. Preformed compression joint seal shall be in accordance with Sec 717. Payment will be considered covered by the contract unit price for other items included in the contract.

For Modified Type D Barrier (Left) At Approach Slabs, see Sheet No. 36.

For location of Section D-D, see Sheet No. 8

For location of Elevations E-E and F-F, see Sheet No. 9.

For details and reinforcement of barriers at end bent, see Sheet No. 35.

E.F. Denotes Each Face.

F.F. Denotes Far Face.

N.F. Denotes Near Face.

END BENT NO. 1 DETAILS

Detailed September 2025
Checked September 2025

Note: This drawing is not to scale. Follow dimensions.

STATE OF MISSOURI
RYAN DAVID SHAW
NUMBER PE-2011000388
PROFESSIONAL ENGINEER
THIS SHEET HAS BEEN SIGNED, SEALED AND DATED ELECTRONICALLY

DATE PREPARED 4/2/2026

ROUTE	STATE
I-270	MO
DISTRICT	SHEET NO.
BR	10

COUNTY: ST. LOUIS
JOB NO.: JSL0021
CONTRACT ID.:
PROJECT NO.:
BRIDGE NO.: A9493

DESCRIPTION | DATE

MISSOURI HIGHWAYS AND TRANSPORTATION COMMISSION
105 WEST CAPITOL
JEFFERSON CITY, MO 65102
1-888-ASK-MODOT (1-888-275-6636)

HDR Engineering, Inc.
1001 Highlands Plaza Drive
Suite 200
St. Louis, MO 63110
314-425-8300
Certificate of Authority: 000856

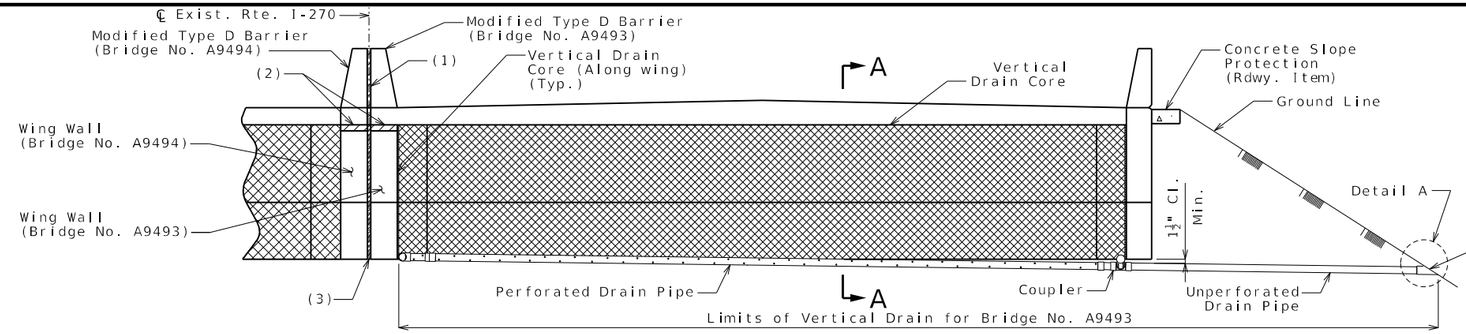

ELEVATION OF END BENT
(Looking Ahead Station)

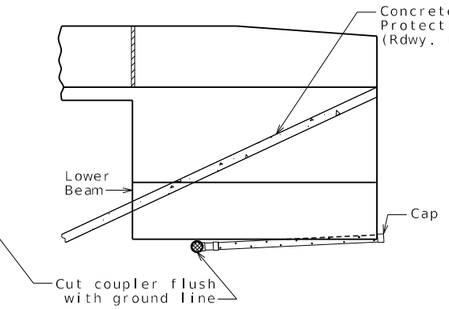

ELEVATION OF EXTERIOR WING

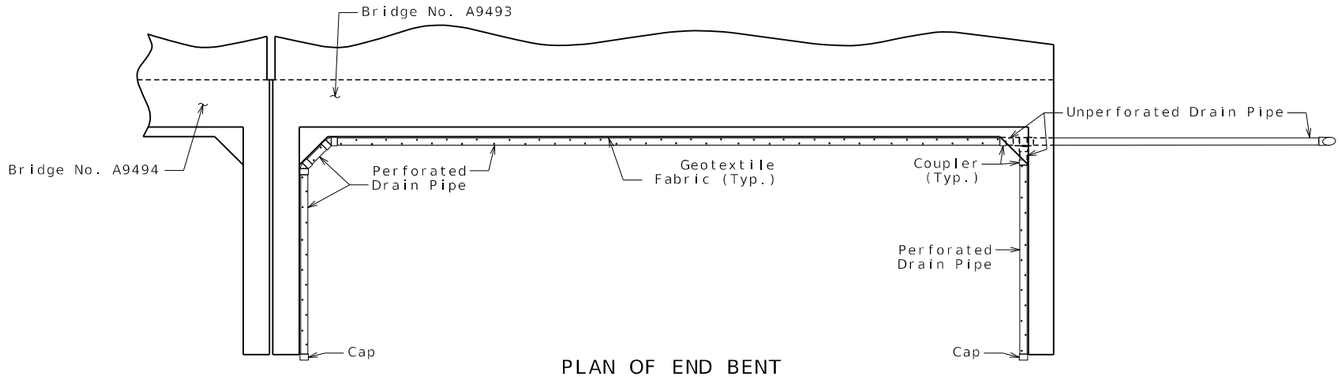

PLAN OF END BENT

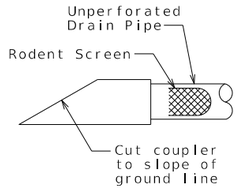

DETAIL A

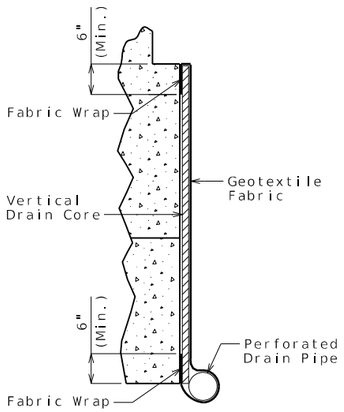

PART SECTION A-A
(Section thru wing similar)

General Notes:

All drain pipe shall be sloped 1 to 2 percent.

Drain pipe may be either 6-inch diameter corrugated metallic-coated steel pipe underdrain, 4-inch diameter corrugated polyvinyl chloride (PVC) drain pipe, or 4-inch diameter corrugated polyethylene (PE) drain pipe.

Drain pipe shall be placed at fill face of end bent and inside face of wings. The pipe shall slope to lowest grade of ground line, also missing the lower beam of end bent by a minimum of 1 1/2 inches.

Perforated pipe shall be placed at fill face side and inside face of wings at the bottom of end bent and plain pipe shall be used where the vertical drain ends to the exit at ground line.

Seal joint between vertical faces of end bent beams and diaphragms of Bridge No. A9493 with the vertical faces of Bridge No A9494. Preformed compression joint seal shall be in accordance with Sec 717. Payment will be considered covered by the contract unit price for other items included in the contract.

For End Bent No. 1 Details, see Sheets No. 8 thru 10.

For End Bent No. 4 Details, see Sheets No. 16 thru 18.

For Modified Type D Barrier (Left) At Approach Slab, see Sheet No. 36.

(1) Place joint filler (varying thickness) between Bridges No. A9493 and A9494 Modified Type D Barriers.

(2) 3" joint filler between top of wing wall and bottom of bridge approach slab.

(3) 1" joint filler between Bridges No. A9493 and A9494 wing walls.

VERTICAL DRAIN AT END BENTS
(Squared end bent shown, skewed end bent similar)

Detailed September 2025
Checked September 2025

Note: This drawing is not to scale. Follow dimensions.

RYAN DAVID SHAW
ILLINOIS PE-2017000368
PROFESSIONAL ENGINEER
THIS SHEET HAS BEEN SIGNED, SEALED AND DATED ELECTRONICALLY

DATE PREPARED 4/2/2026
ROUTE I-270 | STATE MO
DISTRICT BR | SHEET NO. 11
COUNTY ST. LOUIS
JOB NO. JSL0021
CONTRACT ID.
PROJECT NO.
BRIDGE NO. A9493

DESCRIPTION | DATE

MISSOURI HIGHWAYS AND TRANSPORTATION COMMISSION
105 WEST CAPITOL
JEFFERSON CITY, MO 65102
1-888-ASK-MODOT (1-888-275-6636)

HDR Engineering, Inc.
1001 Highlands Plaza Drive
Suite 200
St. Louis, MO 63110
314-425-8300
Certificate of Authority: 000856

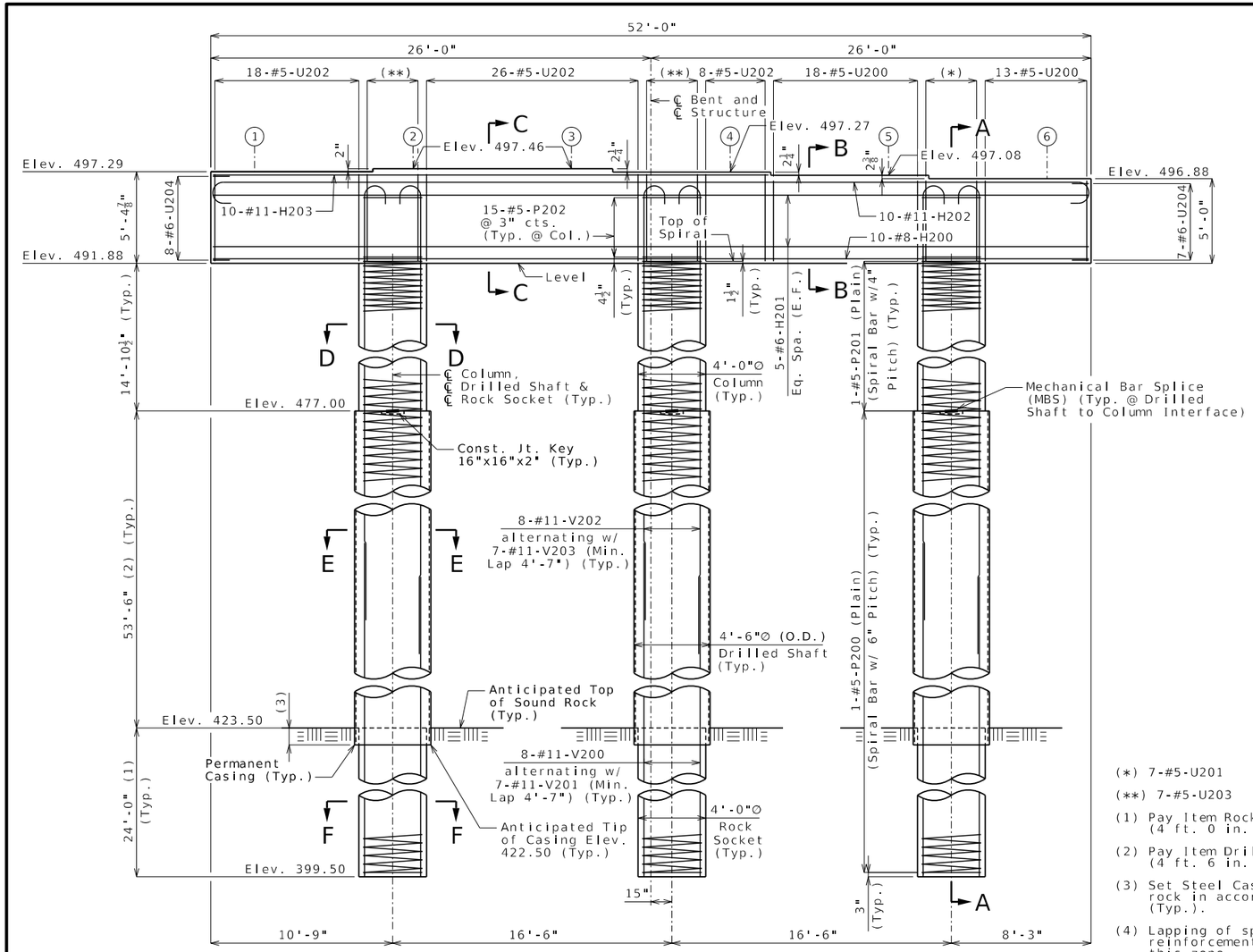

ELEVATION
(Beam keys not shown for clarity.)

(*) 7-#5-U201

(**) 7-#5-U203

(1) Pay Item Rock Sockets (4 ft. 0 in. Dia.)

(2) Pay Item Drilled Shafts (4 ft. 6 in. Dia.)

(3) Set Steel Casing into sound rock in accordance with Sec 701 (Typ.).

(4) Lapping of spiral and vertical reinforcement is not allowed in this zone.

(5) Lap splices and mechanical bars splices, if used, are to be alternately staggered at least 2'-0" at two different locations.

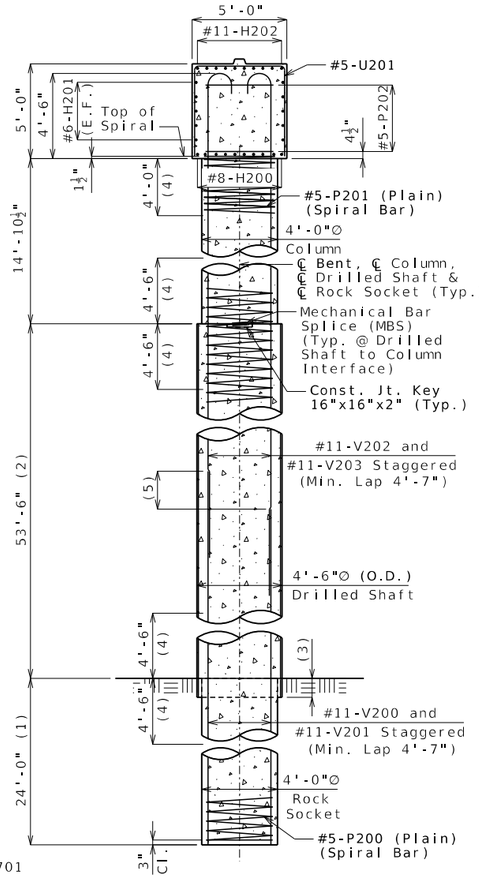

SECTION A-A

Notes:

For locations and mounting details of Underpass Lighting, see Roadway plans.

Work this sheet with Sheet No. 13.

Thickness of permanent steel casing shall be in accordance with Sec 701.

An additional 4 feet has been added to V-bar lengths and an additional 4 feet of height has been added to P200 and P201 length in the quantities, if required, for possible change in drilled shaft or rock socket length. The additional V-bar length shall be cut off or included in the reinforcement lap if not required. The additional P-bar length shall be cut off, with allowance for maintaining the required 1-1/2 turns at the end of spiral length. The spiral pitch shall be spaced similarly to that shown in elevation, if required, but not less than 6-inch centers in the drilled shaft and rock socket.

Sonic logging testing shall be performed on all drilled shafts and rock sockets.

The cost of any required excavation to the top of drilled shafts will be considered completely covered by the contract unit price of other items.

The hooks of vertical bars embedded in the beam cap shall not be turned outward, away from the column core.

E.F. Denotes Each Face.

(1) - Denotes Girder Number.

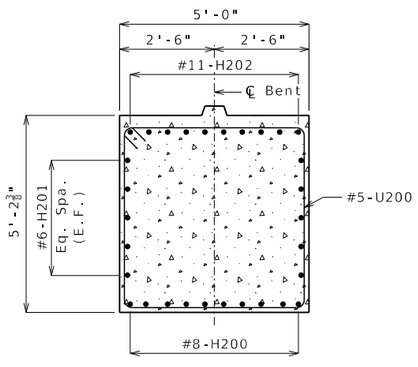

SECTION B-B

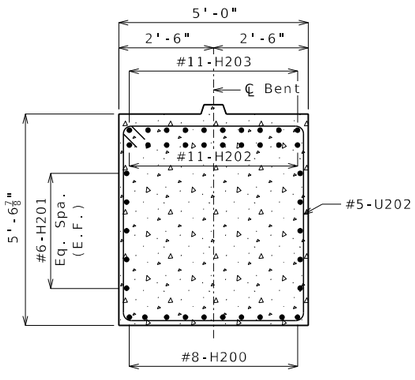

SECTION C-C

Substructure Quantity Table for Intermediate Bent No. 2		
Item		Quantity
Drilled Shafts (4 ft. 6 in. Dia.)	linear foot	160.5
Rock Sockets (4 ft. 0 in. Dia.)	linear foot	72
Video Camera Inspection	each	3
Foundation Inspection Holes	linear foot	102
Sonic Logging Testing	each	3
Class B Concrete (Substructure)	cu. yard	72.3
Reinforcing Steel (Galvanized)	pound	43,870

These quantities are included in the Estimated Quantities table on Sheet No. 2.
All reinforcement in drilled shafts and rock sockets is included in the substructure quantities.

INTERMEDIATE BENT NO. 2 DETAILS

Detailed September 2025
Checked September 2025

Note: This drawing is not to scale. Follow dimensions.

RYAN DAVID SHAW
NUMBER PE-2017000388
PROFESSIONAL ENGINEER
STATE OF MISSOURI
THIS SHEET WAS SIGNED, SEALED AND DATED ELECTRONICALLY

DATE PREPARED 4/2/2026

ROUTE	STATE
I-270	MO
DISTRICT	SHEET NO.
BR	12

COUNTY ST. LOUIS
JOB NO. JSL0021
CONTRACT ID.
PROJECT NO.
BRIDGE NO. A9493

DESCRIPTION | DATE

MISSOURI HIGHWAYS AND TRANSPORTATION COMMISSION
105 WEST CAPITOL
JEFFERSON CITY, MO 65102
1-888-ASK-MODOT (1-888-275-6636)

HDR Engineering, Inc.
1001 Highlands Plaza Drive
Suite 200
St. Louis, MO 63110
314-425-8300
Certificate of Authority: 000856

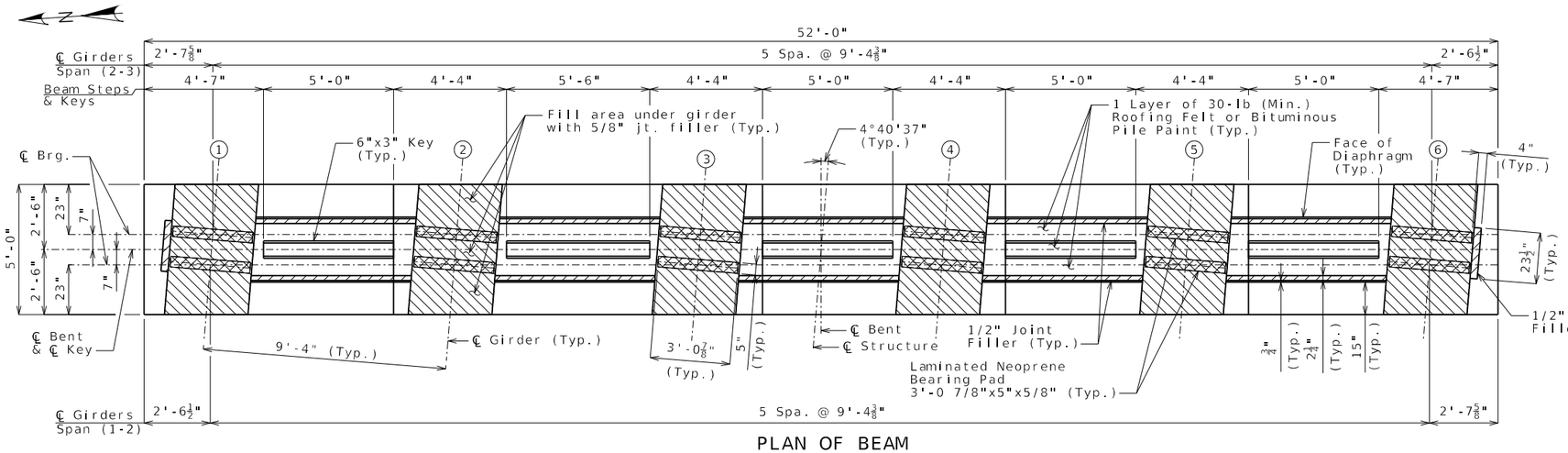

PLAN OF BEAM

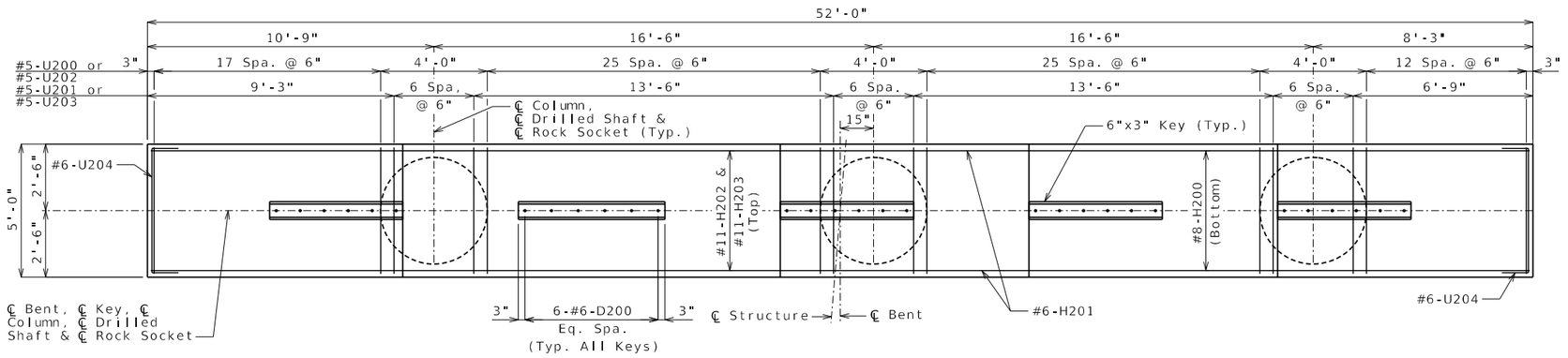

PLAN OF BEAM SHOWING REINFORCEMENT

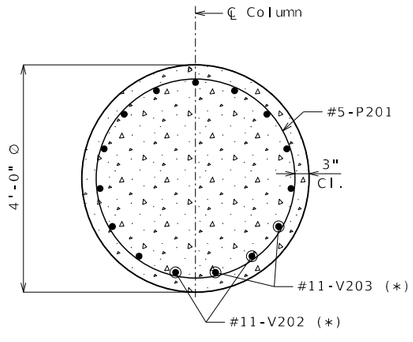

SECTION D-D

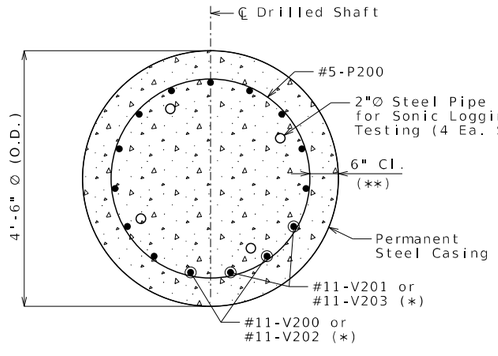

SECTION E-E

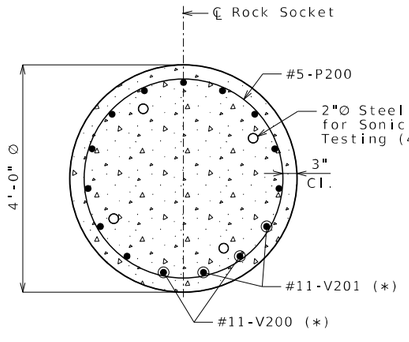

SECTION F-F

(*) At Contractor's option, vertical column/drilled shaft bars may be spliced by MBS in the allowable splice zone. Splices shall be staggered a min. 2'-0" in an alternating pattern.

(**) To outside of casing.

INTERMEDIATE BENT NO. 2 DETAILS

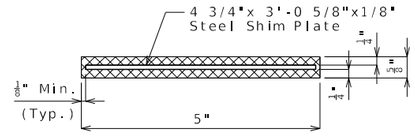

TYPICAL SECTION THRU LAMINATED NEOPRENE BEARING PAD

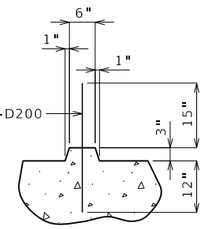

SECTION THRU KEY

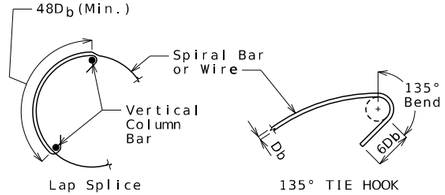

INTERMEDIATE SPLICE OF SPIRALS

Standard 135-degree tie hooks that engage vertical column reinforcing bars shall be provided at each end of splice.

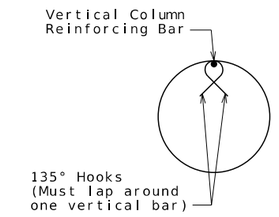

SEISMIC STIRRUP BAR

Note: Seismic hoop hooks shall be staggered around the column at about one-third of the hoop circumference.

Notes:

If contractor uses mechanical bar splices (MBS) for column and drilled shaft vertical reinforcement, contractor shall increase diameter of stirrup bars and seismic bars (spiral/hoop) as needed at the MBS locations. No additional payment will be made for this adjustment. Stirrup bars and seismic bars shall not be shifted to create large gaps to avoid MBS.

Work this sheet with Sheet No. 12.

For Diaphragm Details, see Sheet No. 26.

For steps of 2-inches or more, use 2 1/4 x 1/2-inch Joint Filler up vertical face.

(1) - Denotes girder number.

Detailed September 2025
Checked September 2025

Note: This drawing is not to scale. Follow dimensions.

STATE OF MISSOURI
RYAN DAVID SHAW
ENGINEER
PE-2011000368
PROFESSIONAL ENGINEER
THIS SHEET WAS SIGNED, SEALED AND DATED ELECTRONICALLY

DATE PREPARED 4/2/2026
ROUTE I-270 | STATE MO
DISTRICT BR | SHEET NO. 13
COUNTY ST. LOUIS
JOB NO. JSL0021
CONTRACT ID.
PROJECT NO.
BRIDGE NO. A9493

DESCRIPTION | DATE

MISSOURI HIGHWAYS AND TRANSPORTATION COMMISSION
105 WEST CAPITOL
JEFFERSON CITY, MO 65102
1-888-ASK-MODOT (1-888-275-6636)

HDR Engineering, Inc.
1001 Highlands Plaza Drive
Suite 200
St. Louis, MO 63110
314-425-8300
Certificate of Authority: 000856

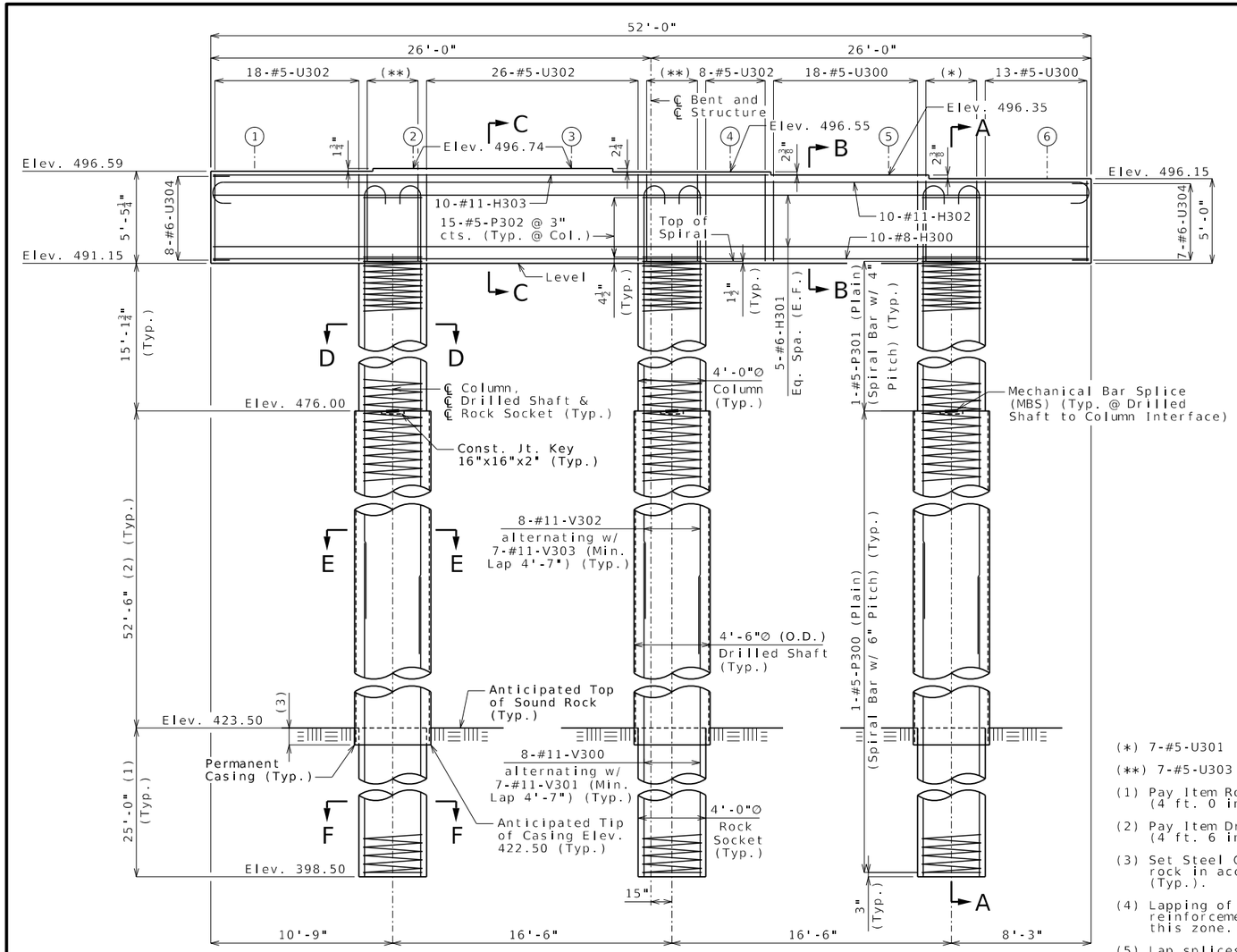

ELEVATION
(Beam keys not shown for clarity.)

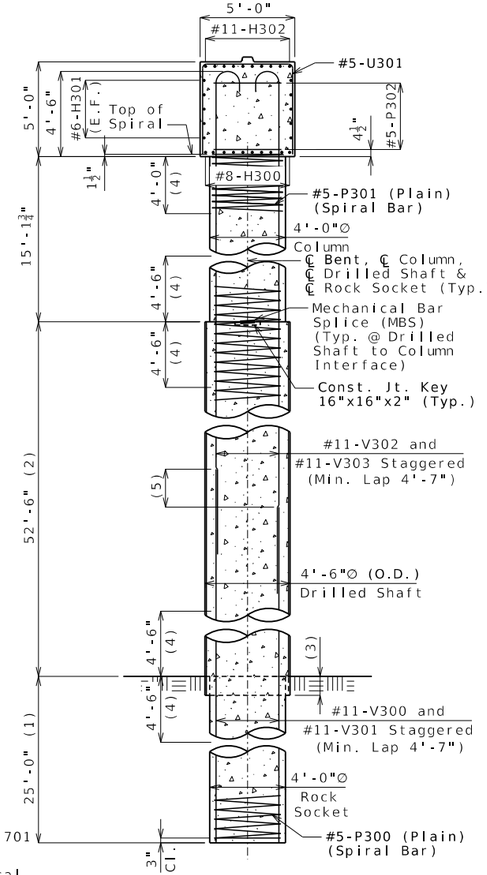

SECTION A-A

(*) 7-#5-U301

(**) 7-#5-U303

(1) Pay Item Rock Sockets (4 ft. 0 in. Dia.)

(2) Pay Item Drilled Shafts (4 ft. 6 in. Dia.)

(3) Set Steel Casing into sound rock in accordance with Sec 701 (Typ.).

(4) Lapping of spiral and vertical reinforcement is not allowed in this zone.

(5) Lap splices and mechanical bars splices, if used, are to be alternately staggered at least 2'-0" at two different locations.

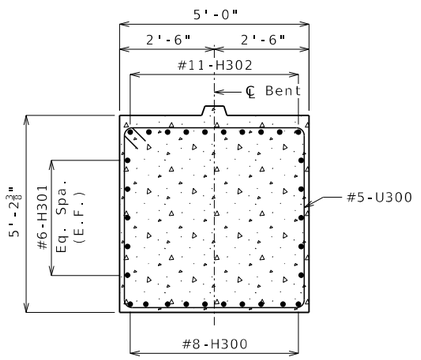

SECTION B-B

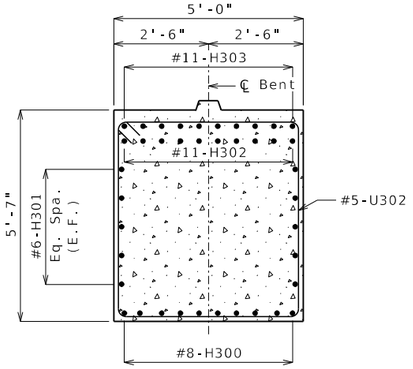

SECTION C-C

Substructure Quantity Table for Intermediate Bent No. 3

Item		Quantity
Drilled Shafts (4 ft. 6 in. Dia.)	linear foot	157.5
Rock Sockets (4 ft. 0 in. Dia.)	linear foot	75
Video Camera Inspection	each	3
Foundation Inspection Holes	linear foot	105
Sonic Logging Testing	each	3
Class B Concrete (Substructure)	cu. yard	72.8
Reinforcing Steel (Galvanized)	pound	43,990

These quantities are included in the Estimated Quantities table on Sheet No. 2.
All reinforcement in drilled shafts and rock sockets is included in the substructure quantities.

Notes:

For locations and mounting details of Underpass Lighting, see Roadway plans.

Work this sheet with Sheet No. 15.

Thickness of permanent steel casing shall be in accordance with Sec 701.

An additional 4 feet has been added to V-bar lengths and an additional 4 feet of height has been added to P300 and P301 length in the quantities, if required, for possible change in drilled shaft or rock socket length. The additional V-bar length shall be cut off or included in the reinforcement lap if not required. The additional P-bar length shall be cut off, with allowance for maintaining the required 1-1/2 turns at the end of spiral length. The spiral pitch shall be spaced similarly to that shown in elevation, if required, but not less than 6-inch centers in the drilled shaft and rock socket.

Sonic logging testing shall be performed on all drilled shafts and rock sockets.

The cost of any required excavation to the top of drilled shafts will be considered completely covered by the contract unit price of other items.

The hook of vertical bars embedded in the beam cap shall not be turned outward, away from the column core.

E.F. Denotes Each Face.

(1) - Denotes Girder Number.

INTERMEDIATE BENT NO. 3 DETAILS

Detailed September 2025
Checked September 2025

Note: This drawing is not to scale. Follow dimensions.

RYAN DAVID SHAW
NUMBER PE-2017000388
PROFESSIONAL ENGINEER
STATE OF MISSOURI
THIS SHEET WAS SIGNED, SEALED AND DATED ELECTRONICALLY

DATE PREPARED 4/2/2026

ROUTE	STATE
I-270	MO
DISTRICT	SHEET NO.
BR	14

COUNTY: ST. LOUIS
JOB NO.: JSL0021
CONTRACT ID.:
PROJECT NO.:
BRIDGE NO.: A9493

DESCRIPTION | DATE

MISSOURI HIGHWAYS AND TRANSPORTATION COMMISSION
105 WEST CAPITOL
JEFFERSON CITY, MO 65102
1-888-ASK-MODOT (1-888-275-6636)

HDR Engineering, Inc.
1001 Highlands Plaza Drive
Suite 200
St. Louis, MO 63110
314-425-8300
Certificate of Authority: 000856

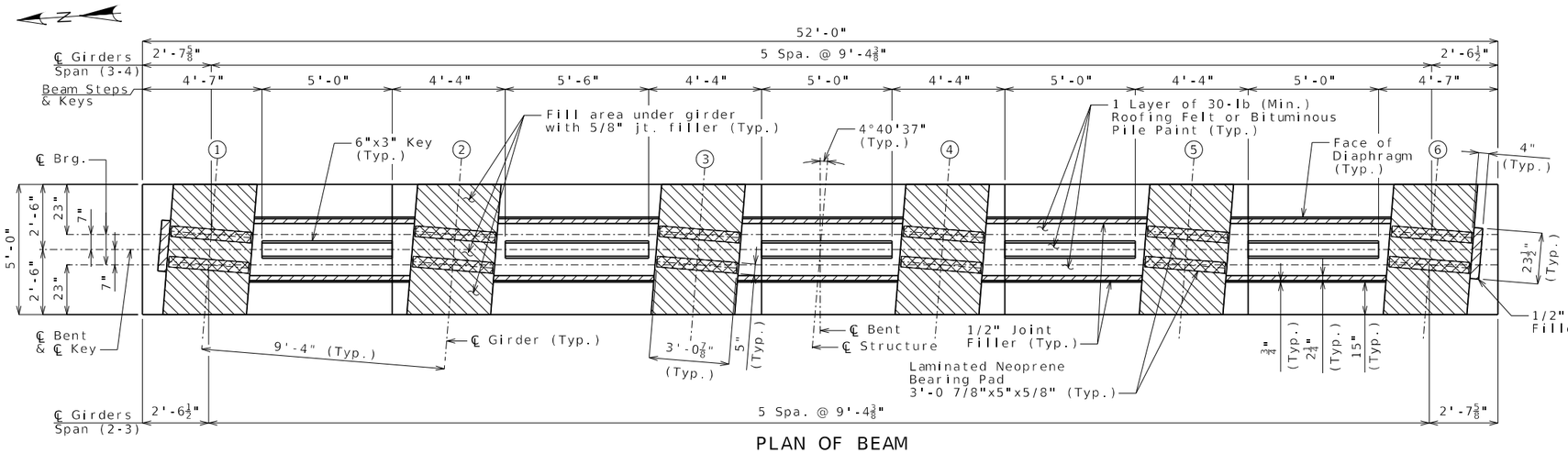

PLAN OF BEAM

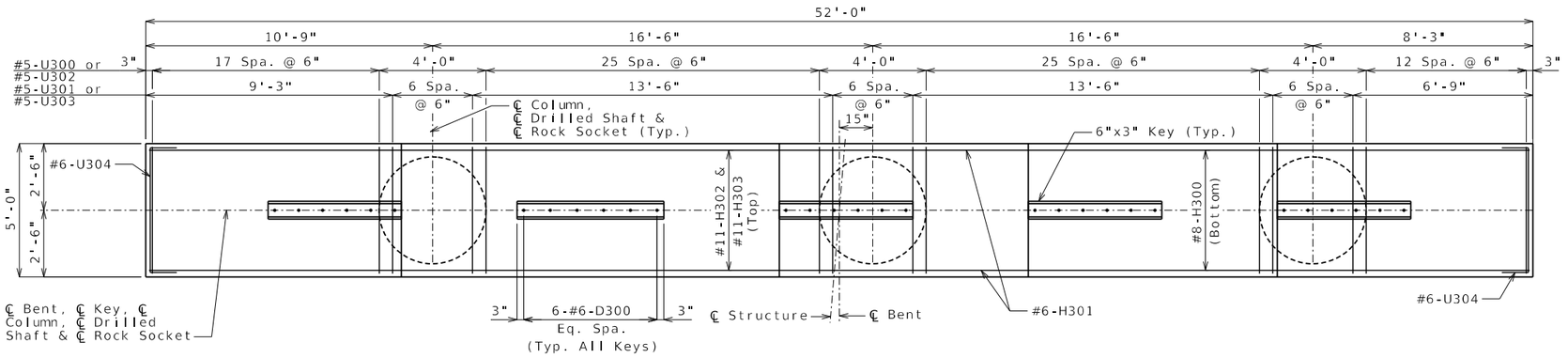

PLAN OF BEAM SHOWING REINFORCEMENT

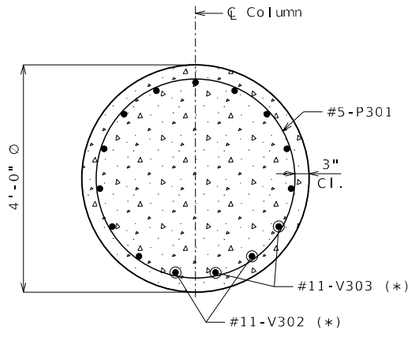

SECTION D-D

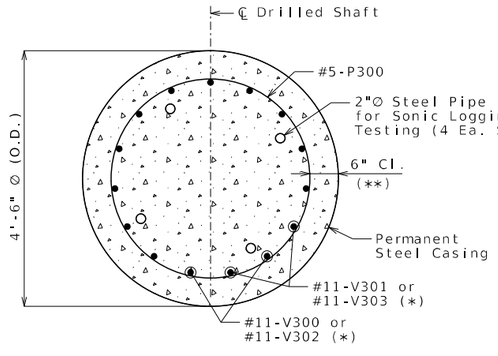

SECTION E-E

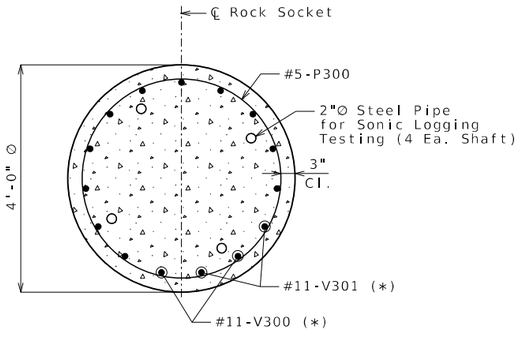

SECTION F-F

(*) At Contractor's option, vertical column/drilled shaft bars may be spliced by MBS in the allowable splice zone. Splices shall be staggered a min. 2'-0" in an alternating pattern.

(**) To outside of casing.

INTERMEDIATE BENT NO. 3 DETAILS

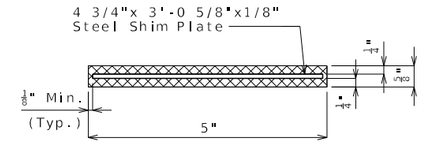

TYPICAL SECTION THRU LAMINATED NEOPRENE BEARING PAD

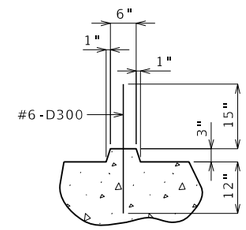

SECTION THRU KEY

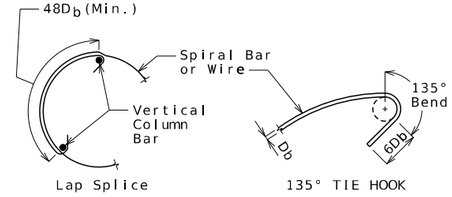

INTERMEDIATE SPLICE OF SPIRALS

Standard 135-degree tie hooks that engage vertical column reinforcing bars shall be provided at each end of splice.

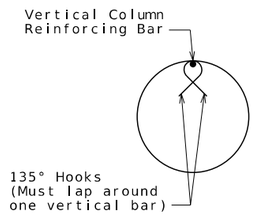

SEISMIC STIRRUP BAR

Note: Seismic hoop hooks shall be staggered around the column at about one-third of the hoop circumference.

Notes:

If contractor uses mechanical bar splices (MBS) for column and drilled shaft vertical reinforcement, contractor shall increase diameter of stirrup bars and seismic bars (spiral/hoop) as needed at the MBS locations. No additional payment will be made for this adjustment. Stirrup bars and seismic bars shall not be shifted to create large gaps to avoid MBS.

Work this sheet with Sheet No. 14.

For Diaphragm Details, see Sheet No. 26.

For steps of 2-inches or more, use 2 1/4 x 1/2-inch Joint Filler up vertical face.

(1) - Denotes girder number.

Detailed September 2025
Checked September 2025

Note: This drawing is not to scale. Follow dimensions.

STATE OF MISSOURI
RYAN DAVID SHAW
ENGINEER
PE-2011000368
PROFESSIONAL ENGINEER
THIS SHEET HAS BEEN SIGNED, SEALED AND DATED ELECTRONICALLY

DATE PREPARED 4/2/2026
ROUTE I-270 | STATE MO
DISTRICT BR | SHEET NO. 15
COUNTY ST. LOUIS
JOB NO. JSL0021
CONTRACT ID.
PROJECT NO.
BRIDGE NO. A9493

DESCRIPTION | DATE

MISSOURI HIGHWAYS AND TRANSPORTATION COMMISSION
105 WEST CAPITOL
JEFFERSON CITY, MO 65102
1-888-ASK-MODOT (1-888-275-6636)

HDR Engineering, Inc.
1001 Highlands Plaza Drive
Suite 200
St. Louis, MO 63110
314-425-8300
Certificate of Authority: 000856

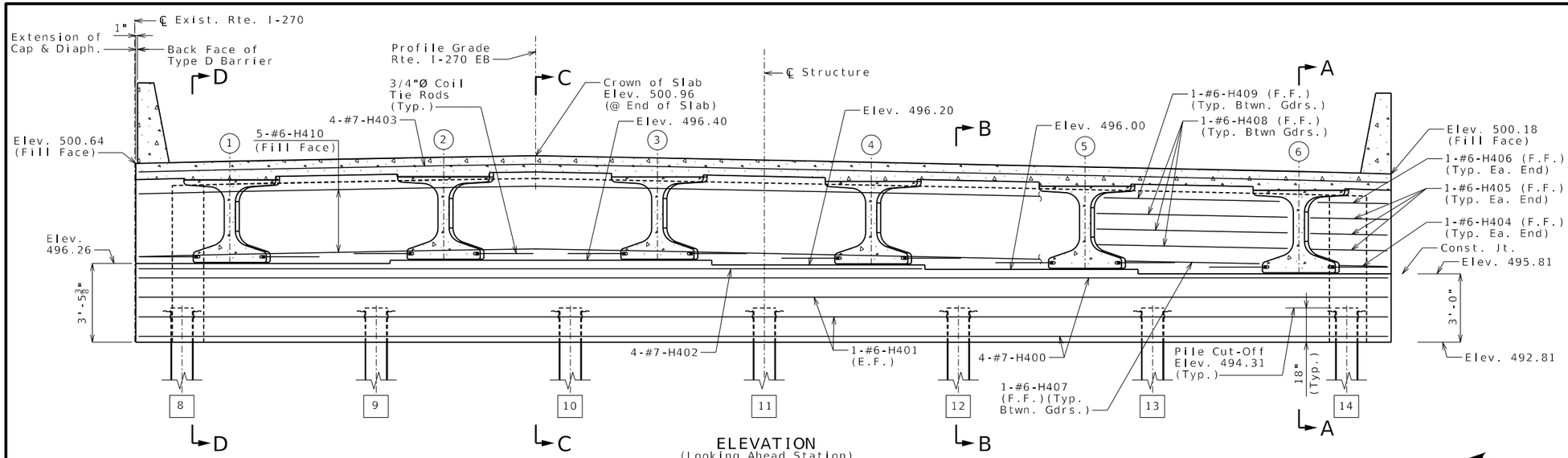

ELEVATION
(Looking Ahead Station)

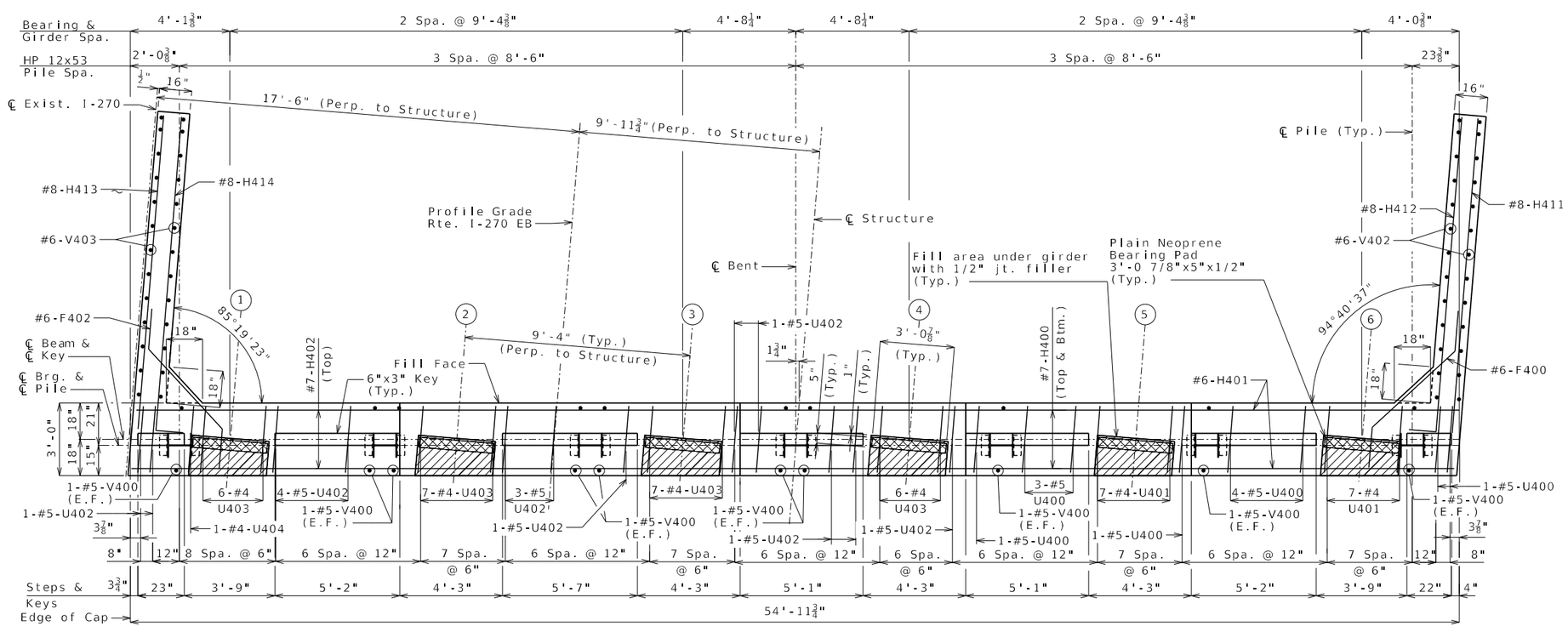

PLAN OF BEAM
(Horizontal dimensions are measured along ℄ Piles and ℄ Brg.)

Notes:

Work this sheet with Sheets No. 17 & 18.

For Sections A-A thru C-C, see Sheet No. 17.

For Section D-D, see Sheet No. 18.

For Key Details, Pile Anchor Details and Steel Pile Splice Detail, see Sheet No. 18.

For location of coil tie rods, see Sheets No. 24 & 25.

Reinforcing steel shall be shifted to clear piles. U-bars shall clear piles by at least 1 1/2-inches.

Strands at ends of girders shall be field bent or, if necessary, cut in field to maintain 1 1/2-inch minimum clearance to fill face of end bent.

All concrete in the end bent above top of beam and below top of slab shall be Class B-2.

#6-F400 and #6-F402 bars shall be bent in field to clear girders.

The U-bars, sets of V-bars, and #5-H420 bars shall be placed parallel to centerline of roadway.

For details and reinforcement of barriers at end bent, see Sheet No. 35.

E.F. Denotes Each Face.

F.F. Denotes Front Face.

(1) - Denotes girder number.

[1] - Denotes pile number.

Substructure Quantity Table for End Bent No. 4		
Item		Quantity
Class 1 Excavation	cu. yard	40
Galvanized Structural Steel Piles (12 in.)	linear foot	427
Pile Point Reinforcement	each	7
Class B Concrete (Substructure)	cu. yard	24.7

These quantities are included in the Estimated Quantities table on Sheet No. 2.

END BENT NO. 4 DETAILS

Detailed September 2025
Checked September 2025

Note: This drawing is not to scale. Follow dimensions.

RYAN DAVID SHAW
NUMBER PE-2017003368
STATE OF MISSOURI
PROFESSIONAL ENGINEER
THIS SHEET HAS BEEN SIGNED, SEALED AND DATED ELECTRONICALLY

DATE PREPARED 4/2/2026
ROUTE I-270 | STATE MO
DISTRICT BR | SHEET NO. 16
COUNTY ST. LOUIS
JOB NO. JSL0021
CONTRACT ID.
PROJECT NO.
BRIDGE NO. A9493

DESCRIPTION | DATE

MISSOURI HIGHWAYS AND TRANSPORTATION COMMISSION
105 WEST CAPITOL
JEFFERSON CITY, MO 65102
1-888-ASK-MODOT (1-888-275-6636)
HDR Engineering, Inc.
1001 Highlands Plaza Drive
Suite 200
St. Louis, MO 63110
314-425-8300
Certificate of Authority: 000856

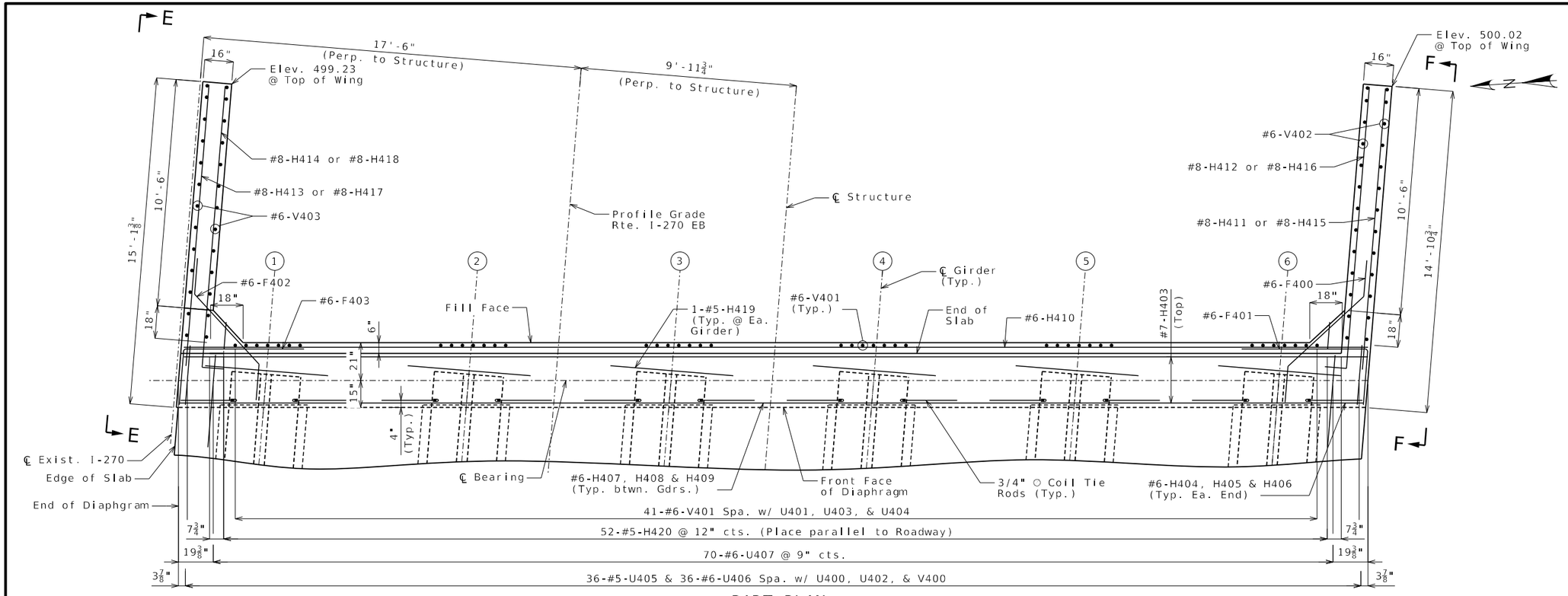

PART PLAN

(Horizontal dimensions are measured along ℄ Brg.)

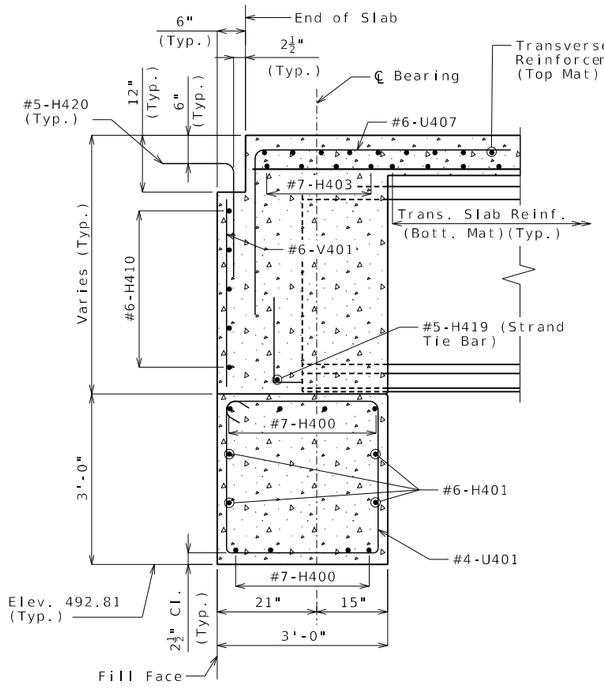

SECTION A-A

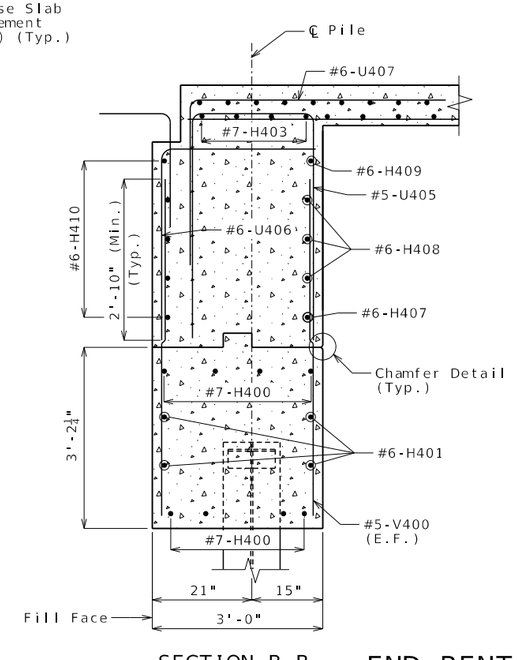

SECTION B-B

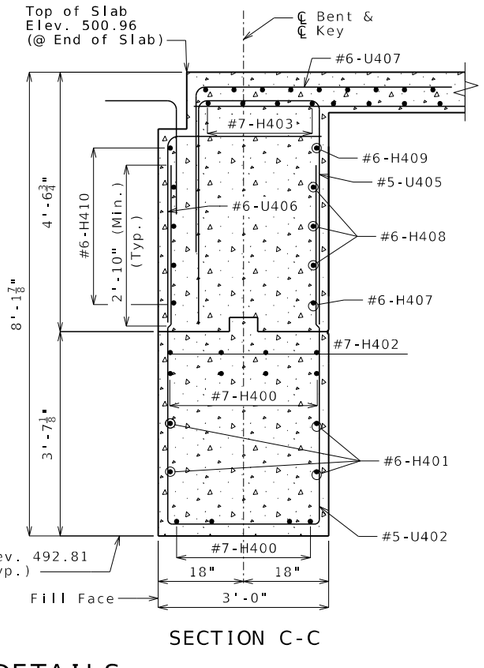

SECTION C-C

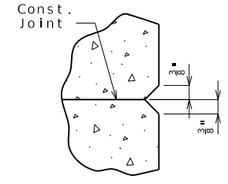

CHAMFER DETAIL

Notes:

Work this sheet with Sheets No. 16 & 18.

#6-F400 and #6-F402 bars shall be bent in the field to clear girders.

The U-bars and #5-H420 bars shall be placed parallel to centerline roadway.

For location of Sections A-A thru C-C, see Sheet No. 16.

For Elevations E-E and F-F, see Sheet No. 18.

For Key details, Pile Anchor details and Pile Splice details, see Sheet No. 18.

For location of coil tie rods and #5-H419 (strand tie bar), see Sheets No. 24 & 25.

For details and reinforcement of barriers at end bent, see Sheet No. 35.

E.F. Denotes Each Face.

(1) - Denotes girder number.

END BENT NO. 4 DETAILS

Detailed September 2025
Checked September 2025

Note: This drawing is not to scale. Follow dimensions.

STATE OF MISSOURI
RYAN DAVID SHAW
ILLINOIS PE-2017003368
PROFESSIONAL ENGINEER
THIS SHEET HAS BEEN SIGNED, SEALED AND DATED ELECTRONICALLY

DATE PREPARED 4/2/2026

ROUTE	STATE
I-270	MO
DISTRICT	SHEET NO.
BR	17

COUNTY: ST. LOUIS
JOB NO.: JSL0021
CONTRACT ID.:
PROJECT NO.:
BRIDGE NO.: A9493

DESCRIPTION | DATE

MISSOURI HIGHWAYS AND TRANSPORTATION COMMISSION
105 WEST CAPITOL
JEFFERSON CITY, MO 65102
1-888-ASK-MODOT (1-888-275-6636)

HDR Engineering, Inc.
1001 Highlands Plaza Drive
Suite 200
St. Louis, MO 63110
314-425-8300
Certificate of Authority: 000856

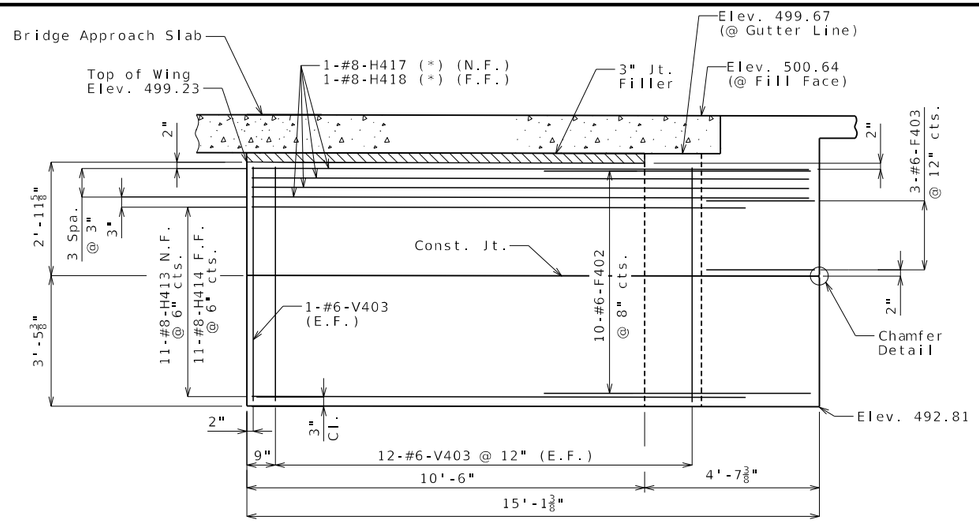

ELEVATION E-E

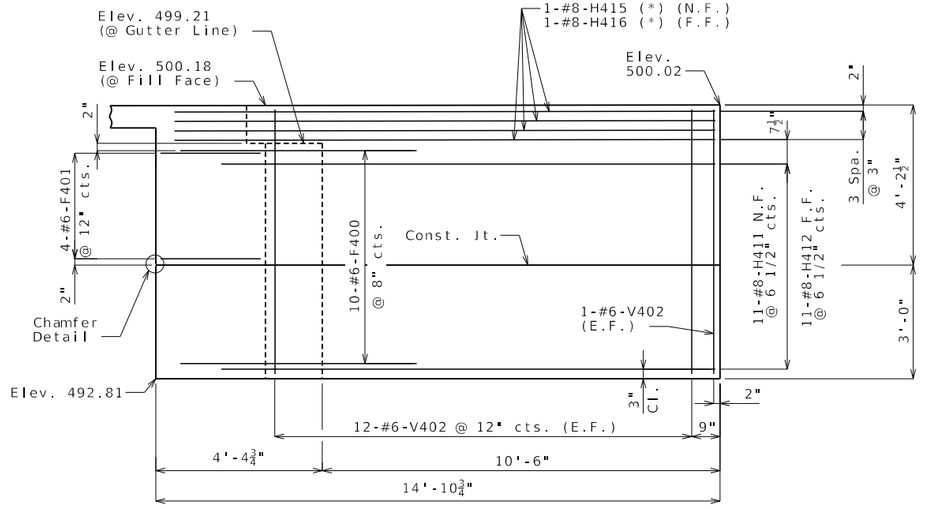

ELEVATION F-F

Notes:

All dimensions and elevations given at outside face of wing unless otherwise noted.

The #6-F400 and F402 bars shall be bent in the field to clear girders.

(*) Place with grade.

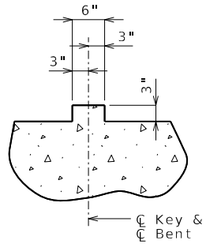

TYPICAL SECTION THRU KEY

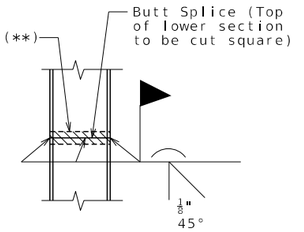

STEEL PILE SPLICE

(If required)

(**) Galvanizing material shall be omitted or removed one inch clear of weld locations in accordance with Sec 702.

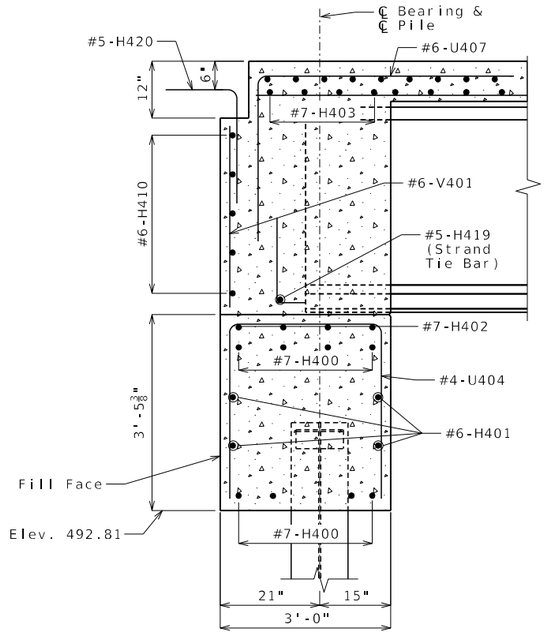

SECTION D-D

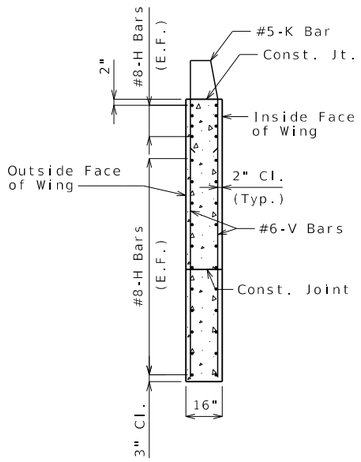

TYPICAL SECTION THRU RIGHT WING

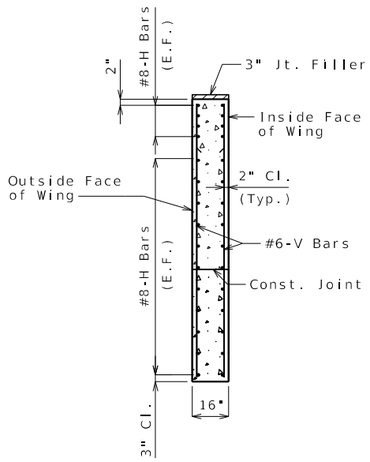

TYPICAL SECTION THRU LEFT WING

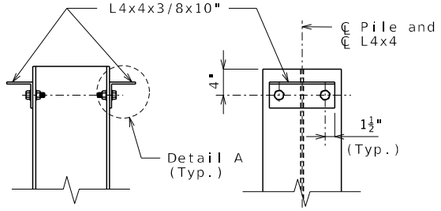

DETAILS OF HP PILE ANCHORS

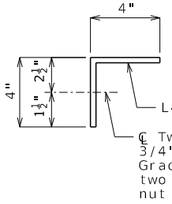

DETAIL A

Angles shall be coated with a minimum of two coats of non-aluminum epoxy mastic primer to provide a dry film thickness of 4 mils minimum, 8 mils maximum, or galvanized in accordance with Sec 1081. Bolts, washers and nuts shall be galvanized in accordance with AASHTO M 232 (ASTM A153), Class C.

Notes:

Work this sheet with Sheets No. 16 & 17.

For Chamfer Detail, see Sheet No. 17.

Seal joint between vertical faces of end bent beams and diaphragms of Bridge No. A9493 with the vertical faces of Bridge No. A9494. Preformed compression joint seal shall be in accordance with Sec 717. Payment will be considered covered by the contract unit price for other items included in the contract.

For Modified Type D Barrier (Left) At Approach Slabs, see Sheet No. 36.

For location of Section D-D, see Sheet No. 16.

For location of Elevations E-E and F-F, see Sheet No. 17.

For details and reinforcement of barriers at end bent, see Sheet No. 35.

E.F. Denotes Each Face.

F.F. Denotes Far Face.

N.F. Denotes Near Face.

END BENT NO. 4 DETAILS

Detailed September 2025
Checked September 2025

Note: This drawing is not to scale. Follow dimensions.

STATE OF MISSOURI
RYAN DAVID SHAW
NUMBER PE-2017003368
PROFESSIONAL ENGINEER
THIS SHEET HAS BEEN SIGNED, SEALED AND DATED ELECTRONICALLY

DATE PREPARED 4/2/2026
ROUTE I-270 | STATE MO
DISTRICT BR | SHEET NO. 18
COUNTY ST. LOUIS
JOB NO. JSL0021
CONTRACT ID.
PROJECT NO.
BRIDGE NO. A9493

DESCRIPTION | DATE

MISSOURI HIGHWAYS AND TRANSPORTATION COMMISSION
105 WEST CAPITOL
JEFFERSON CITY, MO 65102
1-888-ASK-MODOT (1-888-275-6636)

HDR Engineering, Inc.
1001 Highlands Plaza Drive
Suite 200
St. Louis, MO 63110
314-425-8300
Certificate of Authority: 000856

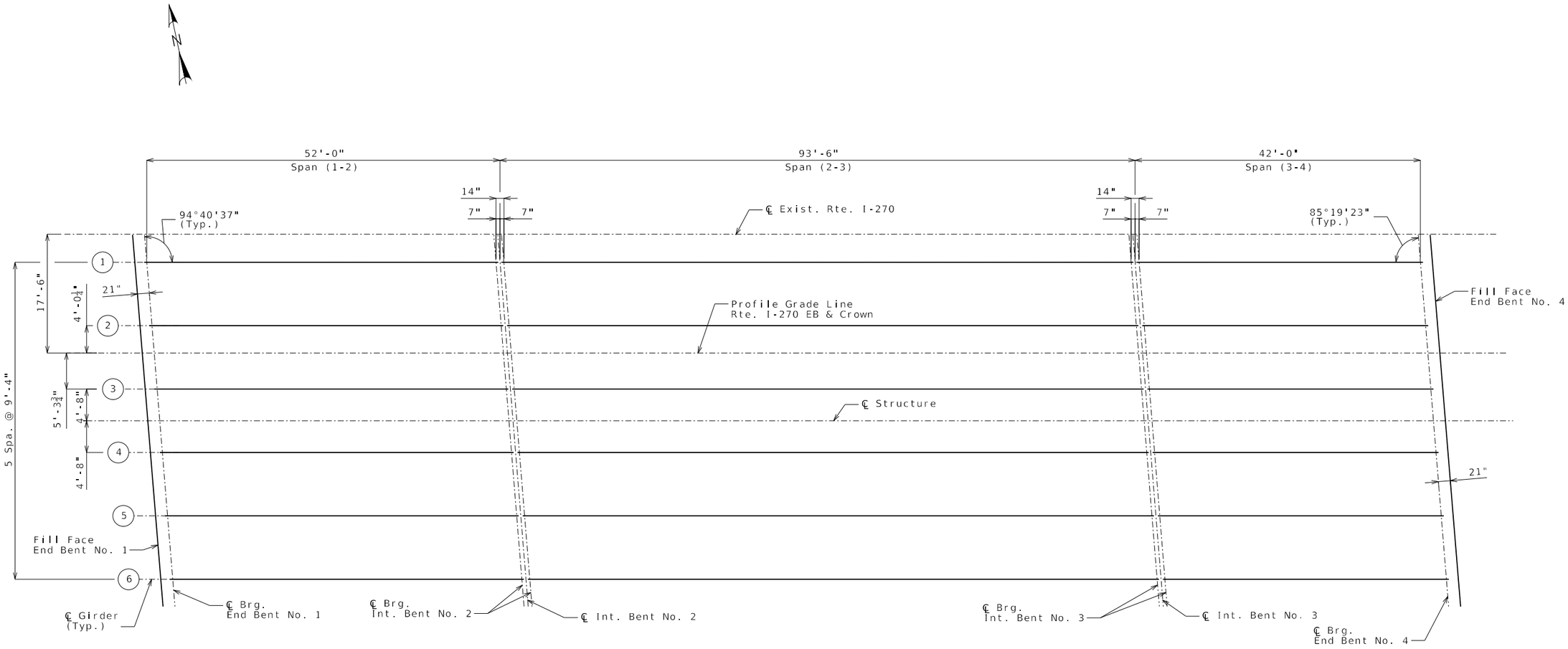

PLAN SHOWING PRESTRESSED CONCRETE NU-GIRDER LAYOUT

Notes:

All longitudinal dimensions are measured horizontal.

All girders are parallel.

(1) - Denotes girder number.

GIRDER LAYOUT

Detailed September 2025
Checked September 2025

Note: This drawing is not to scale. Follow dimensions.

RYAN DAVID SHAW
ILLINOIS PE-2017000368
PROFESSIONAL ENGINEER
STATE OF MISSOURI
THIS SHEET HAS BEEN SIGNED, SEALED AND DATED ELECTRONICALLY

DATE PREPARED 4/2/2026

ROUTE	STATE
I-270	MO
DISTRICT	SHEET NO.
BR	19

COUNTY: ST. LOUIS

JOB NO.: JSL0021

CONTRACT ID.:

PROJECT NO.:

BRIDGE NO.: A9493

DESCRIPTION	DATE

MISSOURI HIGHWAYS AND TRANSPORTATION COMMISSION
105 WEST CAPITOL
JEFFERSON CITY, MO 65102
1-888-ASK-MODOT (1-888-275-6636)

HDR Engineering, Inc.
1001 Highlands Plaza Drive
Suite 200
St. Louis, MO 63110
314-425-8300
Certificate of Authority: 000856

(1) Fabricator shall apply a bond breaker to this region.

(2) Outer strands tensioned to 2.02 kips/strand and inner strands to 8 kips/strand. Placed symmetrical about ℄ Girder. May be moved laterally in pairs.

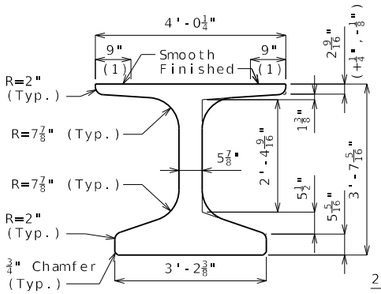

DIMENSIONS

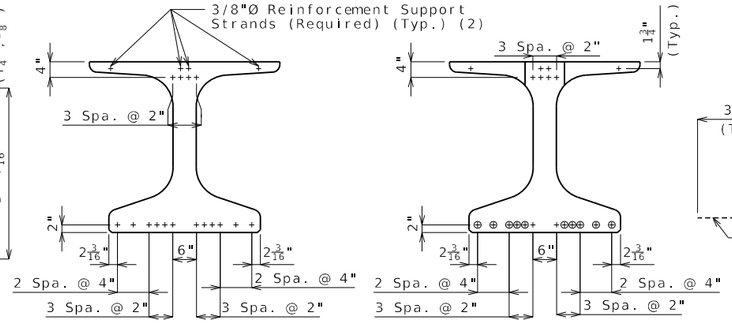

℄ GIRDER

END OF GIRDER

STRAND ARRANGEMENT

\+ Indicates prestressing strand.

o Indicates cut & shop bend with 3'-0" projection.

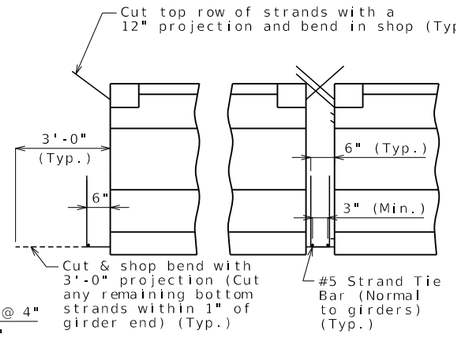

END BENT INTERMEDIATE BENT

STRANDS AT GIRDER ENDS

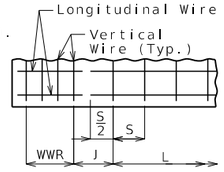

WELDED WIRE PLACEMENT

S = Vertical wire spacing

L = Length of WWR mats

J = Distance between WWR mats

Bill of Reinforcing Steel

Bars Each Girder

No.	Size/Mark	Length	Shape
74	3 G1	2'-10"	8
2	4 G3	3'-10"	20
2	4 G4	2'-3"	20
2	4 G5	2'-8"	20

Welded Wire Each Girder

Mark	Size	S	W	L	J
WWR1	D31	4"	W12	4'-0"	8"
WWR2	D31	8"	W12	6'-8"	10¼"
WWR3	D31	12"	W12	24'-0"	--
WWR6	D31	2"	W12	16"	4"

Bending Diagrams

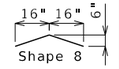

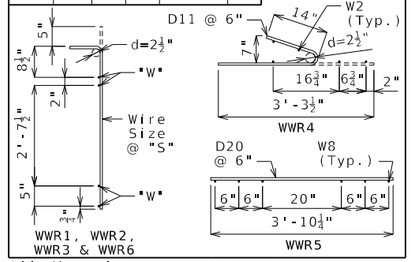

All dimensions are out to out.

Hooks and bends shall be in accordance with the CRSI Manual of Standard Practice for Detailing Reinforced Concrete Structures, Stirrup and Tie Dimensions.

Actual bar lengths are measured along centerline of bar to the nearest inch.

Minimum clearance to reinforcing shall be 1", unless otherwise shown.

All bar reinforcement shall be ASTM A706 Grade 60.

WWR shall not be epoxy coated.

G4 and G5 not required for interior girders. Half no. of G3, G4 and G5 not required for ext. girders of end spans.

General Notes:

Concrete for prestressed beams shall be Class A-1 with f'c = 8000 psi and f'ci = 6500 psi.

Use 16 strands, 0.6"Ø Grade 270, with an initial prestress force of 703.1 kips.

Pretensioned members shall be in accordance with Sec 1029.

Fabricator shall be responsible for location and design of lifting devices.

Exterior and interior girders are the same except: coil ties, top flange blockout, and coil inserts for slab drains.

The contractor shall provide bracing necessary for lateral and torsional stability of the girders during construction of the bracing after the slab has attained 75% design strength. Contractor shall not drill holes in the girders.

For Girder Camber Diagram, see Sheet No. 29.

For location of coil inserts at slab drains, see Sheet No. 27.

For location of coil ties at concrete diaphragms and integral bents, see Sheets No. 8, 9, and 26.

Alternate bar reinforcing steel details are provided and may be used. The same type of reinforcing steel shall be used for all girders in all spans.

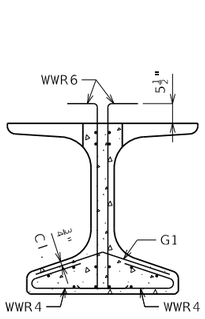

SECTION A-A

Strands not shown for clarity.

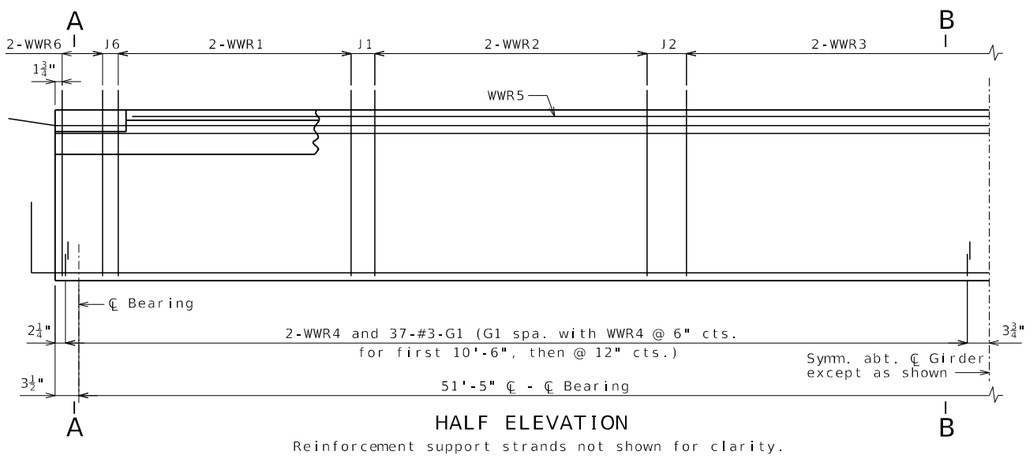

HALF ELEVATION

Reinforcement support strands not shown for clarity.

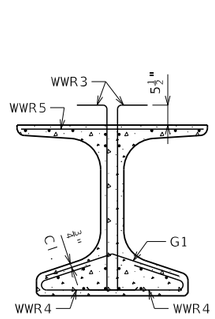

SECTION B-B

Strands not shown for clarity.

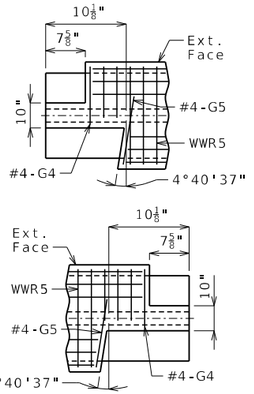

LEFT EXTERIOR GIRDER AT INTERMEDIATE BENT

Rotate 180° for right ext.

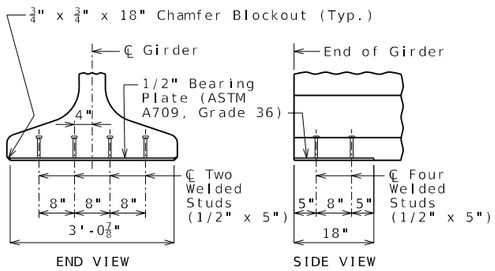

END VIEW SIDE VIEW

BEARING PLATE

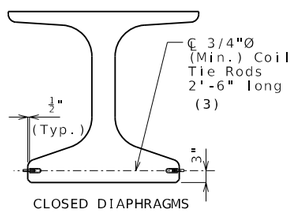

CLOSED DIAPHRAGMS AND INTEGRAL BENTS

COIL TIES

Exclude coil tie at exterior face of exterior girders except at integral end bents.

(3) 2'-5" at exterior face of exterior girders at end bents

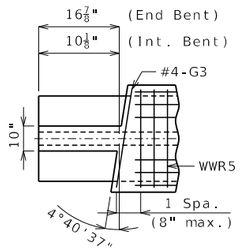

INTERIOR GIRDER AT ALL BENTS & EXTERIOR GIRDER AT END BENT

TOP FLANGE BLOCKOUT

Mirror for right advanced.

NU-GIRDERS - SPAN (1-2)

Detailed September 2025
Checked September 2025

Note: This drawing is not to scale. Follow dimensions.

RYAN DAVID SHAW
NUMBER PE-2011000368
PROFESSIONAL ENGINEER
STATE OF MISSOURI
THIS SHEET WAS SIGNED, SEALED AND DATED ELECTRONICALLY

DATE PREPARED 4/2/2026
ROUTE I-270 | STATE MO
DISTRICT BR | SHEET NO. 20
COUNTY ST. LOUIS
JOB NO. JSL0021
CONTRACT ID.
PROJECT NO.
BRIDGE NO. A9493

DESCRIPTION | DATE

MISSOURI HIGHWAYS AND TRANSPORTATION COMMISSION
105 WEST CAPITOL
JEFFERSON CITY, MO 65102
1-888-ASK-MODOT (1-888-275-6636)
HDR Engineering, Inc.
1001 Highlands Plaza Drive
Suite 200
St. Louis, MO 63110
314-425-8300
Certificate of Authority: 000856

(1) Fabricator shall apply a bond breaker to this region.

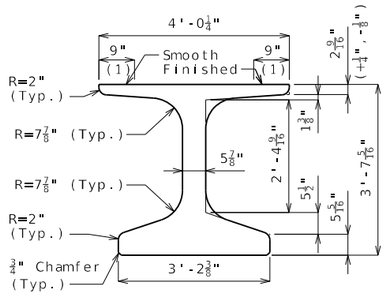

DIMENSIONS

(2) Outer strands tensioned to 2.02 kips/strand and inner strands to 8 kips/strand. Placed symmetrical about ℄ Girder. May be moved laterally in pairs.

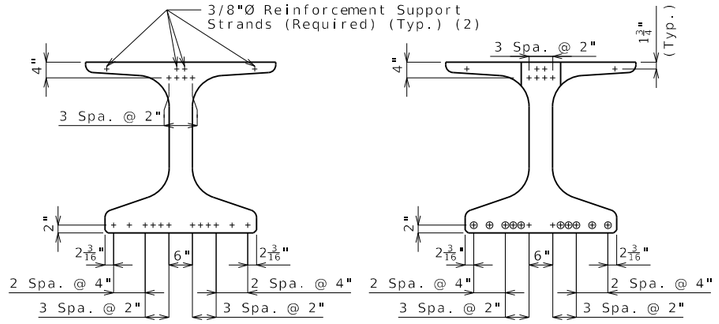

STRAND ARRANGEMENT

\+ Indicates prestressing strand.

o Indicates cut & shop bend with 3'-0" projection.

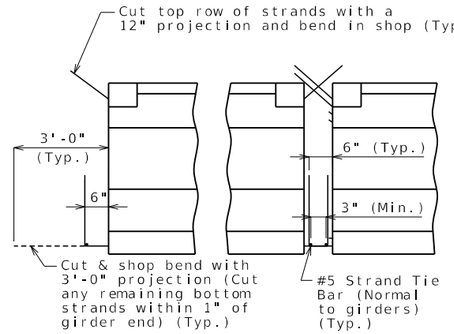

STRANDS AT GIRDER ENDS

Bill of Reinforcing Steel - Each Girder			
No.	Size/ Mark	Length	Shape
118	5 B1	5'-0"	11S
138	4 D1	4'-0"	9S
2	4 G3	3'-10"	20
2	4 G4	2'-3"	20
2	4 G5	2'-8"	20

Bending Diagrams

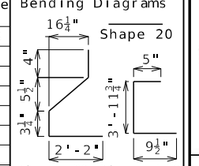

Welded Wire Reinforcement - Each Girder

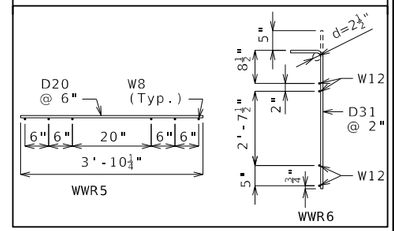

All dimensions are out to out.

Hooks and bends shall be in accordance with the CRSI Manual of Standard Practice for Detailing Reinforced Concrete Structures, Stirrup and Tie Dimensions.

Actual bar lengths are measured along centerline of bar to the nearest inch.

Minimum clearance to reinforcing shall be 1", unless otherwise shown.

All bar reinforcement shall be ASTM A706 Grade 60.

The two D1 bars may be furnished as one bar at the fabricator's option.

All B1 bars shall be epoxy coated.

G4 and G5 not required for interior girders. Half no. of G3, G4 and G5 not required for ext. girders of end spans.

General Notes:

Concrete for prestressed beams shall be Class A-1 with f'c = 8000 psi and f'ci = 6500 psi.

Use 16 strands, 0.6"Ø Grade 270, with an initial prestress force of 703.1 kips.

Pretensioned members shall be in accordance with Sec 1029.

Fabricator shall be responsible for location and design of lifting devices.

Exterior and interior girders are the same except: coil ties, top flange blockout, and coil inserts for slab drains.

The contractor shall provide bracing necessary for lateral and torsional stability of the girders during construction of the concrete slab and remove the bracing after the slab has attained 75% design strength. Contractor shall not drill holes in the girders.

For Girder Camber Diagram, see Sheet No. 29.

For location of coil inserts at slab drains, see Sheet No. 27.

For location of coil ties at concrete diaphragms and integral bents, see Sheets No. 8, 9 and 26.

Alternate bar reinforcing steel details are provided and may be used. The same type of reinforcing steel shall be used for all girders in all spans.

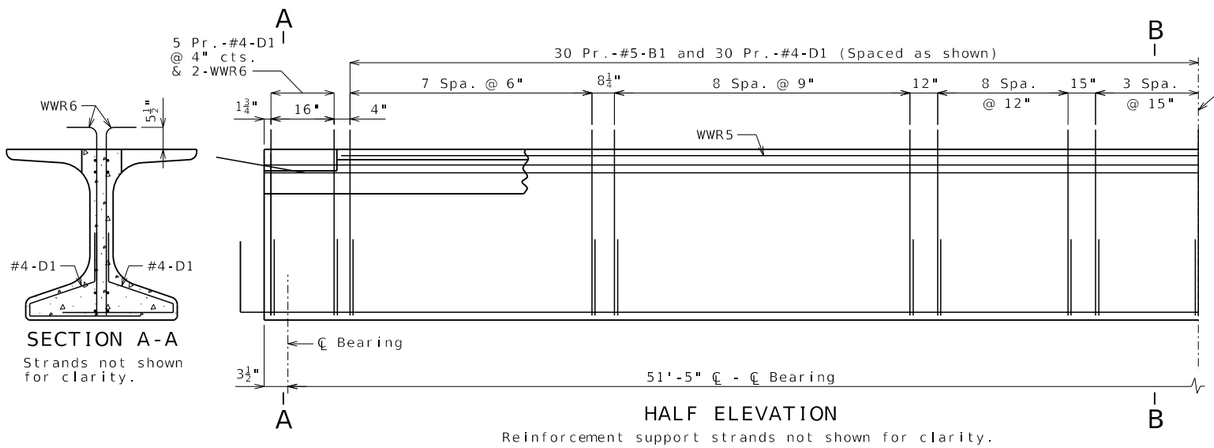

SECTION A-A

Strands not shown for clarity.

HALF ELEVATION

Reinforcement support strands not shown for clarity.

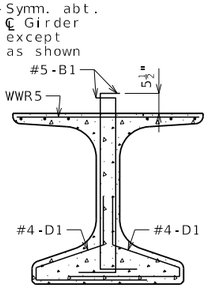

SECTION B-B

Strands not shown for clarity.

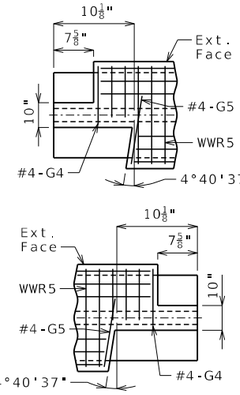

LEFT EXTERIOR GIRDER AT INTERMEDIATE BENT

Rotate 180° for right ext.

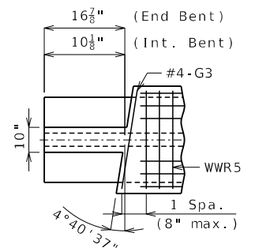

INTERIOR GIRDER AT ALL BENTS & EXTERIOR GIRDER AT END BENT

TOP FLANGE BLOCKOUT

Mirror for right advanced.

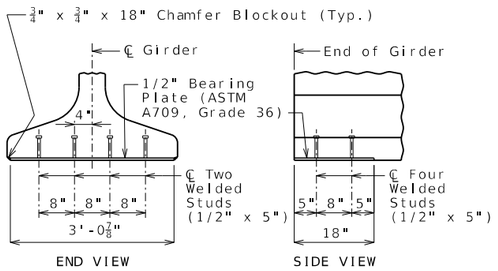

BEARING PLATE

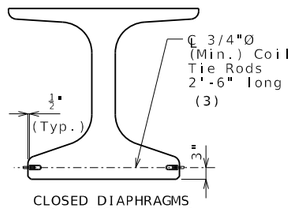

CLOSED DIAPHRAGMS AND INTEGRAL BENTS

COIL TIES

Exclude coil tie at exterior face of exterior girders except at integral end bents.

(3) 2'-5" at exterior face of exterior girders at end bents

NU-GIRDERS (ALTERNATE REINFORCEMENT) - SPAN (1-2)

Detailed September 2025
Checked September 2025

Note: This drawing is not to scale. Follow dimensions.

RYAN DAVID SHAW — NUMBER PE-2011000388 — PROFESSIONAL ENGINEER — STATE OF MISSOURI

THIS SHEET WAS SIGNED, SEALED AND DATED ELECTRONICALLY

DATE PREPARED 4/2/2026

ROUTE	STATE
I-270	MO
DISTRICT	SHEET NO.
BR	21

COUNTY: ST. LOUIS

JOB NO.: JSL0021

CONTRACT ID.:

PROJECT NO.:

BRIDGE NO.: A9493

DESCRIPTION | DATE

MISSOURI HIGHWAYS AND TRANSPORTATION COMMISSION
105 WEST CAPITOL
JEFFERSON CITY, MO 65102
1-888-ASK-MODOT (1-888-275-6636)

HDR Engineering, Inc.
1001 Highlands Plaza Drive
Suite 200
St. Louis, MO 63110
314-425-8300
Certificate of Authority: 000856

(1) Fabricator shall apply a bond breaker to this region.

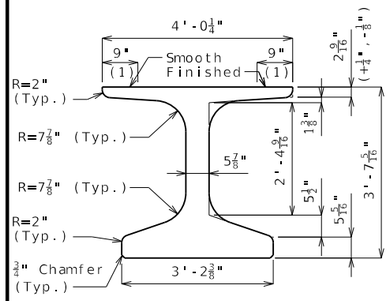

DIMENSIONS

(2) Outer strands tensioned to 2.02 kips/strand and inner strands to 8 kips/strand. Placed symmetrical about ℄ Girder. May be moved laterally in pairs.

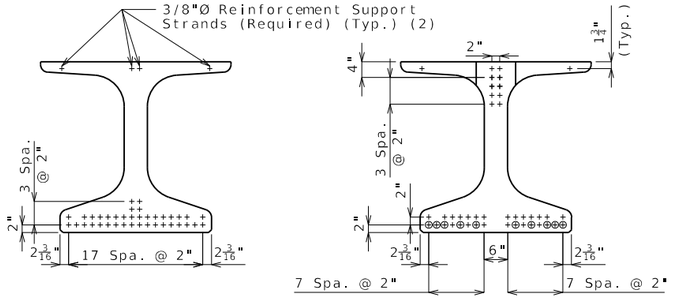

STRAND ARRANGEMENT

\+ Indicates prestressing strand.

○ Indicates cut & shop bend with 3'-0" projection.

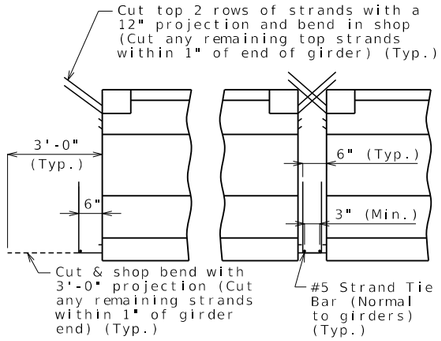

INTERMEDIATE BENT

STRANDS AT GIRDER ENDS

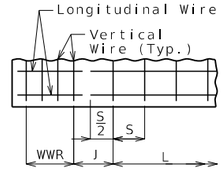

WELDED WIRE PLACEMENT

S = Vertical wire spacing

L = Length of WWR mats

J = Distance between WWR mats

Bill of Reinforcing Steel

Bars Each Girder				
No.	Size/Mark		Length	Shape
114	3	G1	2'-10"	8
2	4	G3	3'-10"	20
2	4	G4	2'-3"	20
2	4	G5	2'-8"	20

Welded Wire Each Girder						
Mark	Size	S	W	L		J
WWR1	D31	4"	W12	8'-4"		8"
WWR2	D31	8"	W12	8'-8"		11¾"
WWR3	D31	12"	W12	52'-0"		--
WWR6	D31	2"	W12	16"		4"

Bending Diagrams

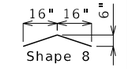

Shape 20

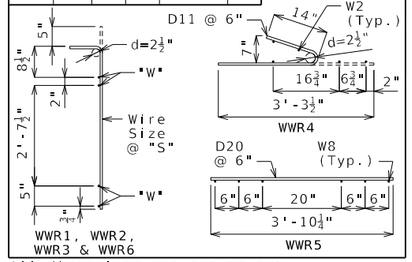

All dimensions are out to out.

Hooks and bends shall be in accordance with the CRSI Manual of Standard Practice for Detailing Reinforced Concrete Structures, Stirrup and Tie Dimensions.

Actual bar lengths are measured along centerline of bar to the nearest inch.

Minimum clearance to reinforcing shall be 1", unless otherwise shown.

All bar reinforcement shall be ASTM A706 Grade 60.

WWR shall not be epoxy coated.

G4 and G5 not required for interior girders. G3 not required for exterior girders of intermediate spans.

General Notes:

Concrete for prestressed beams shall be Class A-1 with f'c = 8000 psi and f'ci = 6500 psi.

Use 38 strands, 0.6"Ø Grade 270, with an initial prestress force of 1669.8 kips.

Pretensioned members shall be in accordance with Sec 1029.

Fabricator shall be responsible for location and design of lifting devices.

Exterior and interior girders are the same except: coil ties and top flange blockout.

The contractor shall provide bracing necessary for lateral and torsional stability of the girders during construction of the concrete slab and remove the bracing after the slab has attained 75% design strength. Contractor shall not drill holes in the girders.

For Girder Camber Diagram, see Sheet No. 29.

For location of coil ties at concrete diaphragms, see Sheet No. 26.

Alternate bar reinforcing steel details are provided and may be used. The same type of reinforcing steel shall be used for all girders in all spans.

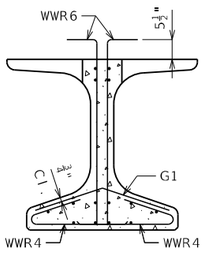

SECTION A-A

Strands not shown for clarity.

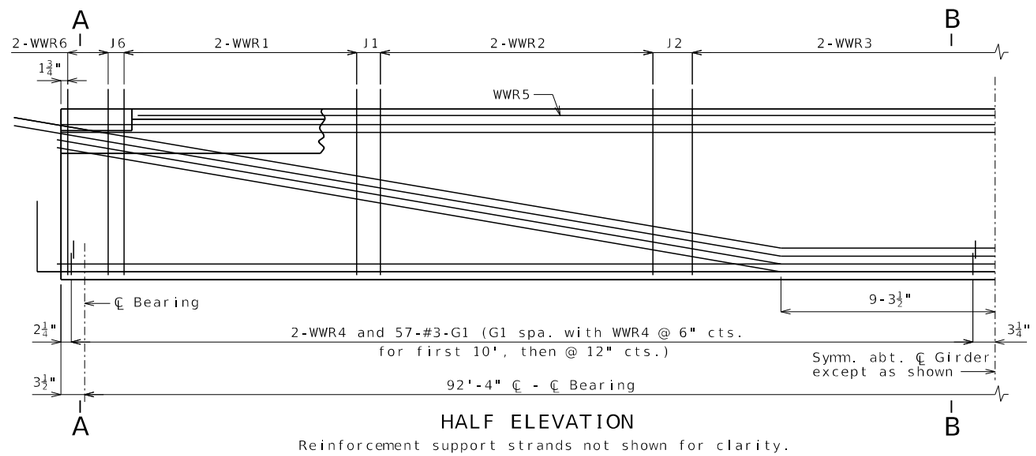

HALF ELEVATION

Reinforcement support strands not shown for clarity.

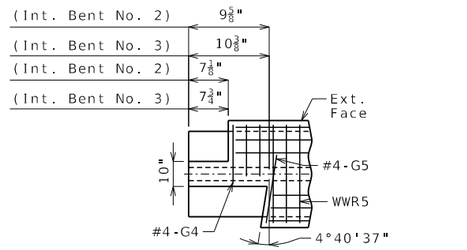

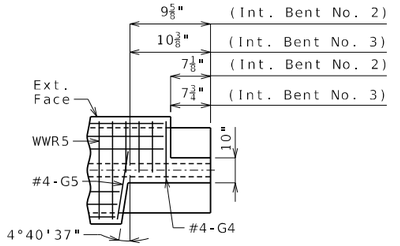

LEFT EXTERIOR GIRDER AT INTERMEDIATE BENT

Rotate 180° for right ext.

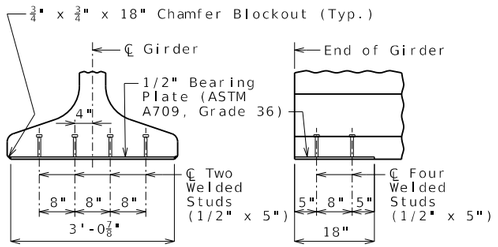

BEARING PLATE

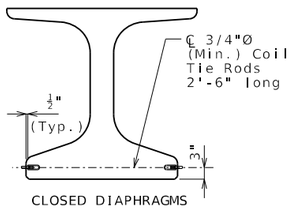

CLOSED DIAPHRAGMS AND INTEGRAL BENTS

COIL TIES

Exclude coil tie at exterior face of exterior girders.

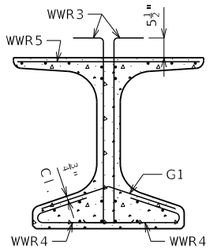

SECTION B-B

Strands not shown for clarity.

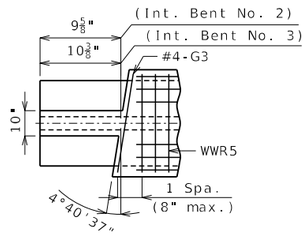

INTERIOR GIRDER AT ALL BENTS

TOP FLANGE BLOCKOUT

Mirror for right advanced.

NU-GIRDERS - SPAN (2-3)

Detailed September 2025
Checked September 2025

Note: This drawing is not to scale. Follow dimensions.

RYAN DAVID SHAW
NUMBER PE-2011000388
PROFESSIONAL ENGINEER
STATE OF MISSOURI
THIS SHEET HAS BEEN SIGNED, SEALED AND DATED ELECTRONICALLY

DATE PREPARED 4/2/2026
ROUTE I-270 | STATE MO
DISTRICT BR | SHEET NO. 22
COUNTY ST. LOUIS
JOB NO. JSL0021
CONTRACT ID.
PROJECT NO.
BRIDGE NO. A9493

DESCRIPTION | DATE

MISSOURI HIGHWAYS AND TRANSPORTATION COMMISSION
105 WEST CAPITOL
JEFFERSON CITY, MO 65102
1-888-ASK-MODOT (1-888-275-6636)

HDR Engineering, Inc.
1001 Highlands Plaza Drive
Suite 200
St. Louis, MO 63110
314-425-8300
Certificate of Authority: 000856

(1) Fabricator shall apply a bond breaker to this region.

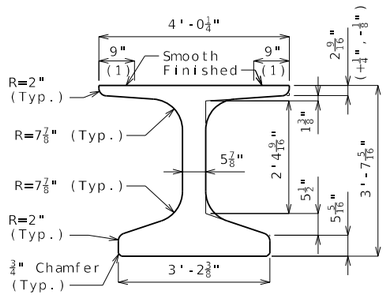

DIMENSIONS

(2) Outer strands tensioned to 2.02 kips/strand and inner strands to 8 kips/strand. Placed symmetrical about ℄ Girder. May be moved laterally in pairs.

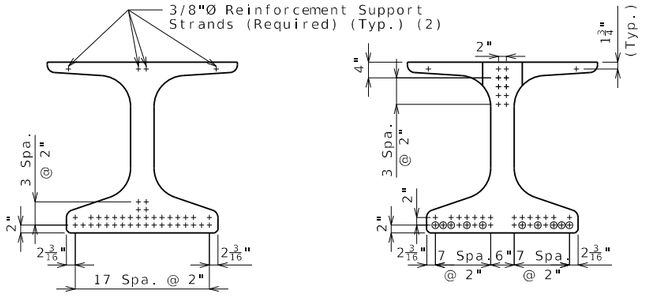

℄ GIRDER END OF GIRDER

STRAND ARRANGEMENT

\+ Indicates prestressing strand.

o Indicates cut & shop bend with 3'-0" projection.

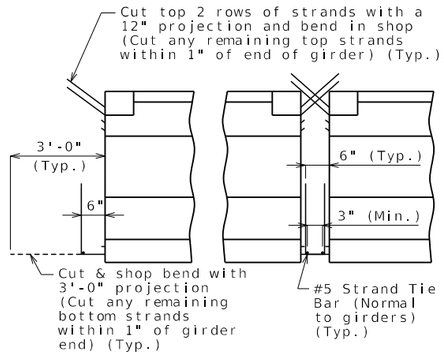

INTERMEDIATE BENT

STRANDS AT GIRDER ENDS

Bill of Reinforcing Steel - Each Girder			
No.	Size/ Mark	Length	Shape
206	5 B1	5'-0"	11S
226	4 D1	4'-0"	9S
2	4 G3	3'-10"	20
2	4 G4	2'-3"	20
2	4 G5	2'-8"	20

Bending Diagrams

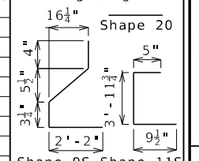

Welded Wire Reinforcement - Each Girder

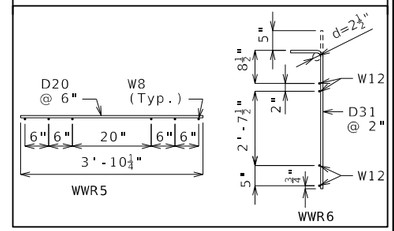

All dimensions are out to out.

Hooks and bends shall be in accordance with the CRSI Manual of Standard Practice for Detailing Reinforced Concrete Structures, Stirrup and Tie Dimensions.

Actual bar lengths are measured along centerline of bar to the nearest inch.

Minimum clearance to reinforcing shall be 1", unless otherwise shown.

All bar reinforcement shall be ASTM A706 Grade 60.

The two D1 bars may be furnished as one bar at the fabricator's option.

All B1 bars shall be epoxy coated.

G4 and G5 not required for interior girders. G3 not required for exterior girders of intermediate spans.

General Notes:

Concrete for prestressed beams shall be Class A-1 with f'c = 8000 psi and f'ci = 6500 psi.

Use 38 strands, 0.6"Ø Grade 270, with an initial prestress force of 1669.8 kips.

Pretensioned members shall be in accordance with Sec 1029.

Fabricator shall be responsible for location and design of lifting devices.

Exterior and interior girders are the same except: coil ties and top flange blockout.

The contractor shall provide bracing necessary for lateral and torsional stability of the girders during construction of the concrete slab and remove the bracing after the slab has attained 75% design strength. Contractor shall not drill holes in the girders.

For Girder Camber Diagram, see Sheet No. 29.

For location of coil ties at concrete diaphragms, see Sheet No. 26.

Alternate bar reinforcing steel details are provided and may be used. The same type of reinforcing steel shall be used for all girders in all spans.

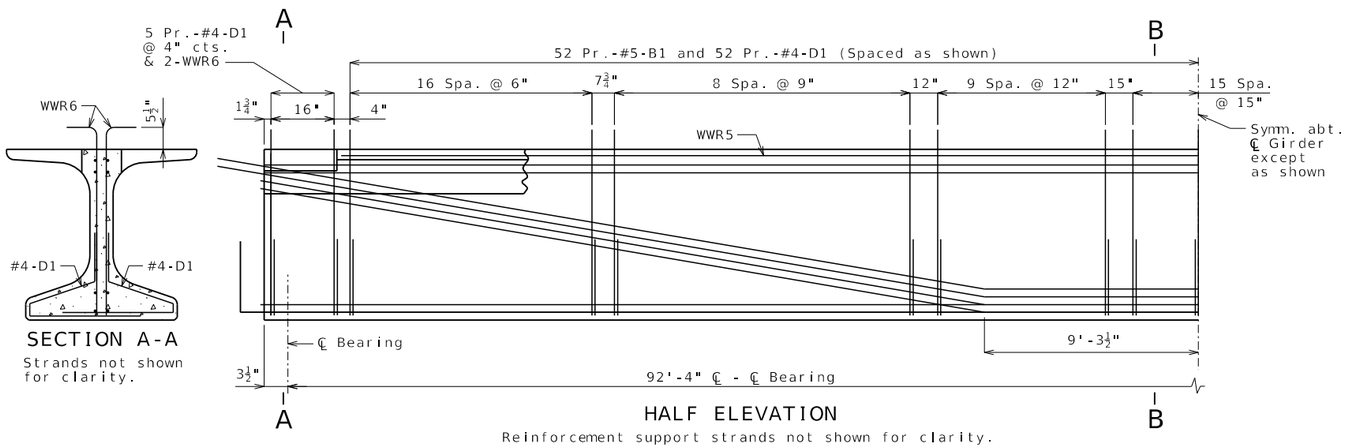

SECTION A-A

Strands not shown for clarity.

HALF ELEVATION

Reinforcement support strands not shown for clarity.

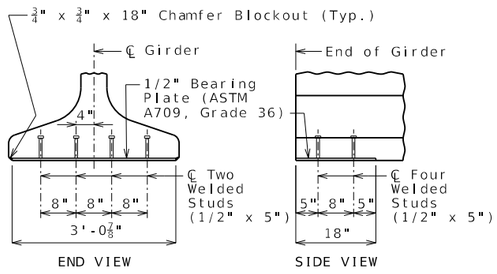

BEARING PLATE

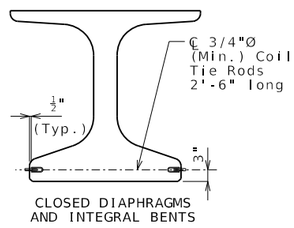

CLOSED DIAPHRAGMS AND INTEGRAL BENTS

COIL TIES

Exclude coil tie at exterior face of exterior girders.

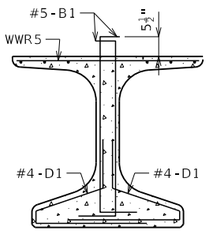

SECTION B-B

Strands not shown for clarity.

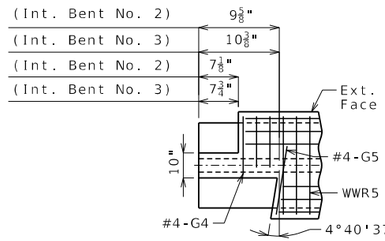

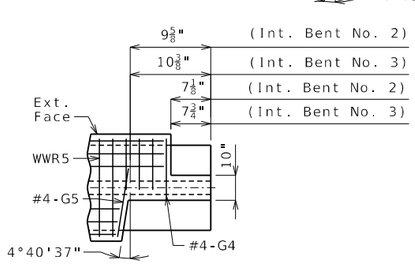

LEFT EXTERIOR GIRDER AT INTERMEDIATE BENT

Rotate 180° for right ext.

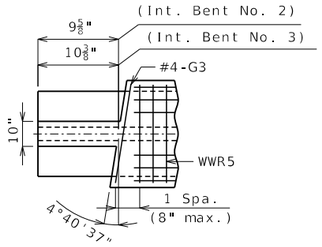

INTERIOR GIRDER AT ALL BENTS

TOP FLANGE BLOCKOUT

Mirror for right advanced.

NU-GIRDERS (ALTERNATE REINFORCEMENT) - SPAN (2-3)

Detailed September 2025
Checked September 2025

Note: This drawing is not to scale. Follow dimensions.

STATE OF MISSOURI
RYAN DAVID SHAW
NUMBER PE-2017000368
PROFESSIONAL ENGINEER
THIS SHEET HAS BEEN SIGNED, SEALED AND DATED ELECTRONICALLY

DATE PREPARED 4/2/2026

ROUTE	STATE
I-270	MO
DISTRICT	SHEET NO.
BR	23

COUNTY ST. LOUIS

JOB NO. JSL0021

CONTRACT ID.

PROJECT NO.

BRIDGE NO. A9493

DESCRIPTION	DATE

MISSOURI HIGHWAYS AND TRANSPORTATION COMMISSION
105 WEST CAPITOL
JEFFERSON CITY, MO 65102
1-888-ASK-MODOT (1-888-275-6636)

HDR Engineering, Inc.
1001 Highlands Plaza Drive
Suite 200
St. Louis, MO 63110
314-425-8300
Certificate of Authority: 000856

(1) Fabricator shall apply a bond breaker to this region.

(2) Outer strands tensioned to 2.02 kips/strand and inner strands to 8 kips/strand. Placed symmetrical about ℄ Girder. May be moved laterally in pairs.

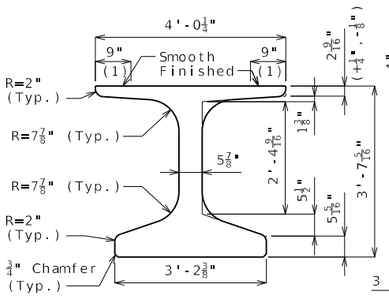

DIMENSIONS

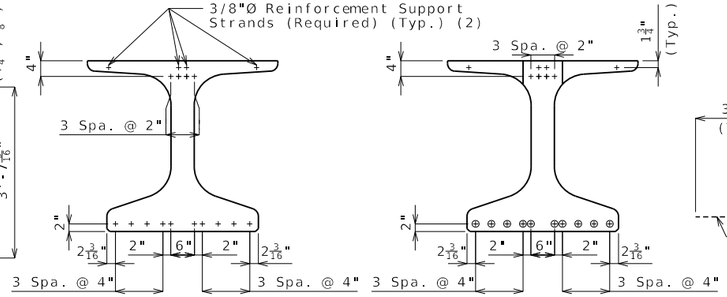

℄ GIRDER END OF GIRDER

STRAND ARRANGEMENT

\+ Indicates prestressing strand.

o Indicates cut & shop bend with 3'-0" projection.

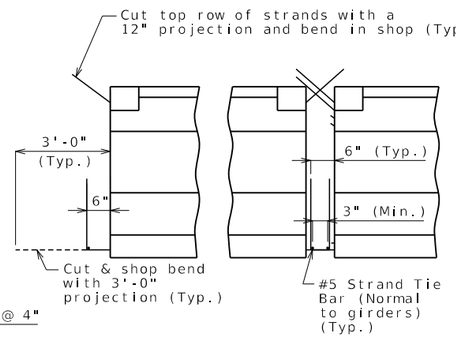

END BENT INTERMEDIATE BENT

STRANDS AT GIRDER ENDS

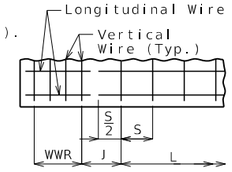

WELDED WIRE PLACEMENT

S = Vertical wire spacing

L = Length of WWR mats

J = Distance between WWR mats

Bill of Reinforcing Steel

Bars Each Girder				
No.	Size/Mark		Length	Shape
64	3	G1	2'-10"	8
2	4	G3	3'-10"	20
2	4	G4	2'-3"	20
2	4	G5	2'-8"	20

Welded Wire Each Girder					
Mark	Size	S	W	L	J
WWR1	D31	4"	W12	3'-8"	8"
WWR2	D31	8"	W12	4'-0"	10¼"
WWR3	D31	12"	W12	20'-0"	--
WWR6	D31	2"	W12	16"	4"

Bending Diagrams

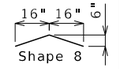

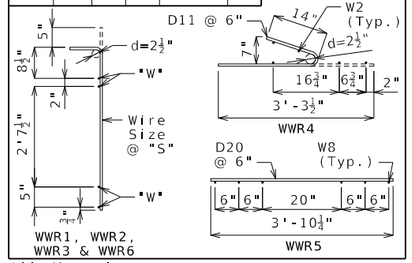

All dimensions are out to out.

Hooks and bends shall be in accordance with the CRSI Manual of Standard Practice for Detailing Reinforced Concrete Structures, Stirrup and Tie Dimensions.

Actual bar lengths are measured along centerline of bar to the nearest inch.

Minimum clearance to reinforcing shall be 1", unless otherwise shown.

All bar reinforcement shall be ASTM A706 Grade 60.

WWR shall not be epoxy coated.

G4 and G5 not required for interior girders. Half no. of G3, G4 and G5 not required for ext. girders of end spans.

General Notes:

Concrete for prestressed beams shall be Class A-1 with f'c = 8000 psi and f'ci = 6500 psi.

Use 14 strands, 0.6"Ø Grade 270, with an initial prestress force of 615.2 kips.

Pretensioned members shall be in accordance with Sec 1029.

Fabricator shall be responsible for location and design of lifting devices.

Exterior and interior girders are the same except: coil ties and top flange blockout.

The contractor shall provide bracing necessary for lateral and torsional stability of the girders during construction of the concrete slab and remove the bracing after the slab has attained 75% design strength. Contractor shall not drill holes in the girders.

For Girder Camber Diagram, see Sheet No. 29.

For location of coil ties at concrete diaphragms and integral bents, see Sheets No. 16, 17, and 26.

Alternate bar reinforcing steel details are provided and may be used. The same type of reinforcing steel shall be used for all girders in all spans.

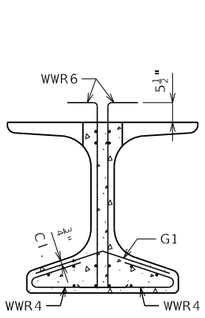

SECTION A-A

Strands not shown for clarity.

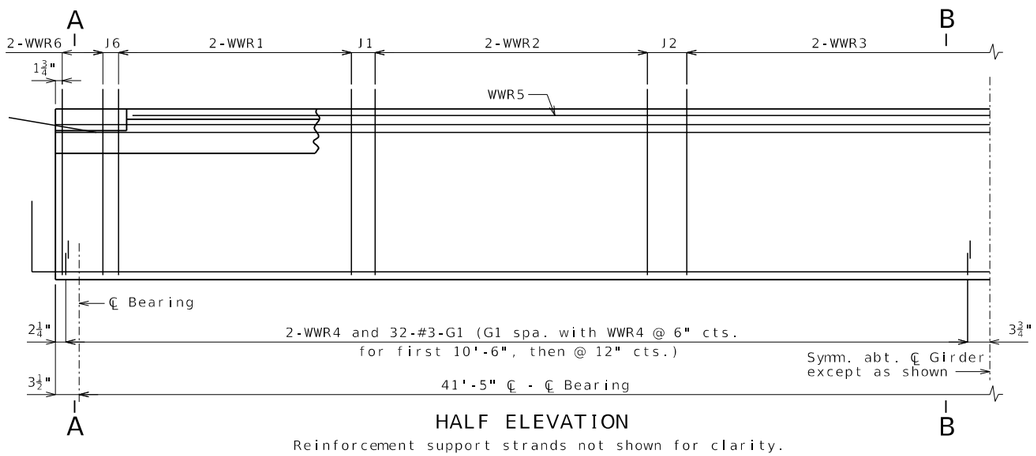

HALF ELEVATION

Reinforcement support strands not shown for clarity.

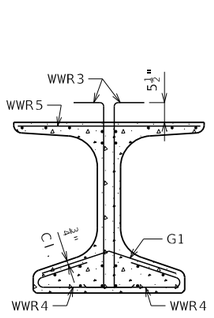

SECTION B-B

Strands not shown for clarity.

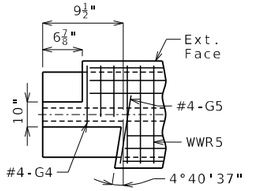

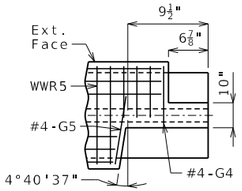

LEFT EXTERIOR GIRDER AT INTERMEDIATE BENT

Rotate 180° for right ext.

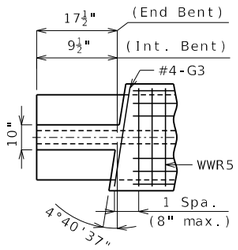

INTERIOR GIRDER AT ALL BENTS & EXTERIOR GIRDER AT END BENT

TOP FLANGE BLOCKOUT

Mirror for right advanced.

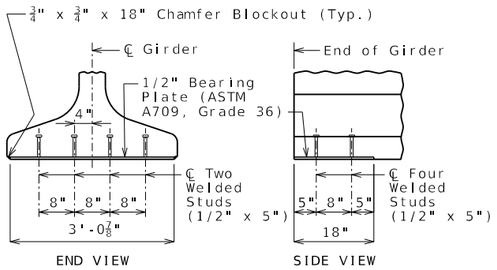

END VIEW SIDE VIEW

BEARING PLATE

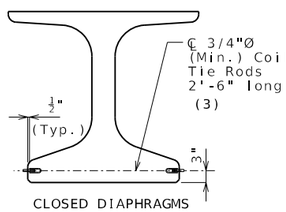

CLOSED DIAPHRAGMS AND INTEGRAL BENTS

COIL TIES

Exclude coil tie at exterior face of exterior girders except at integral end bents.

(3) 2'-5" at exterior face of exterior girders at end bents

NU-GIRDERS - SPAN (3-4)

Detailed September 2025
Checked September 2025

Note: This drawing is not to scale. Follow dimensions.

RYAN DAVID SHAW NUMBER PE-2011000368 PROFESSIONAL ENGINEER
THIS SHEET HAS BEEN SIGNED, SEALED AND DATED ELECTRONICALLY

DATE PREPARED 4/2/2026
ROUTE I-270 | STATE MO
DISTRICT BR | SHEET NO. 24
COUNTY ST. LOUIS
JOB NO. JSL0021
CONTRACT ID.
PROJECT NO.
BRIDGE NO. A9493

DESCRIPTION | DATE

MISSOURI HIGHWAYS AND TRANSPORTATION COMMISSION
105 WEST CAPITOL
JEFFERSON CITY, MO 65102
1-888-ASK-MODOT (1-888-275-6636)

HDR Engineering, Inc.
1001 Highlands Plaza Drive
Suite 200
St. Louis, MO 63110
314-425-8300
Certificate of Authority: 000856

(1) Fabricator shall apply a bond breaker to this region.

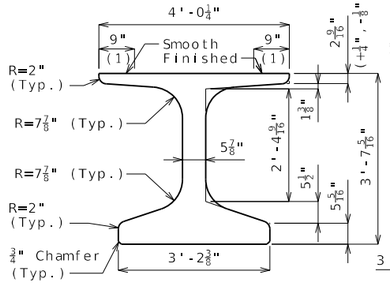

DIMENSIONS

(2) Outer strands tensioned to 2.02 kips/strand and inner strands to 8 kips/strand. Placed symmetrical about ℄ Girder. May be moved laterally in pairs.

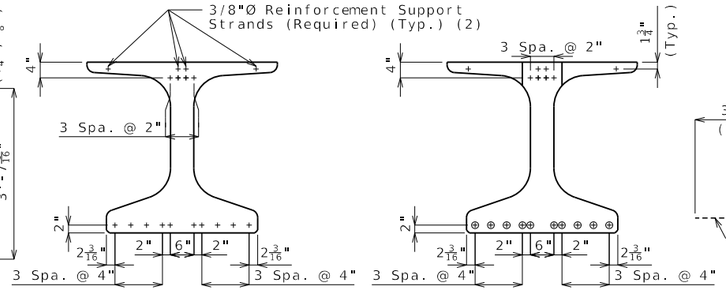

℄ GIRDER END OF GIRDER

STRAND ARRANGEMENT

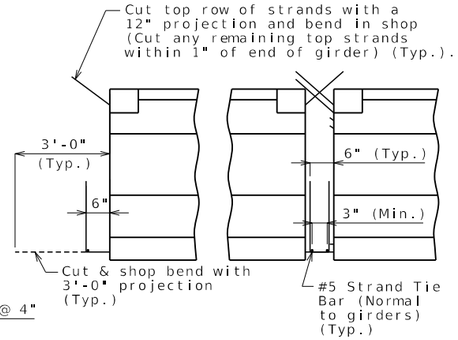

END BENT INTERMEDIATE BENT

STRANDS AT GIRDER ENDS

+ Indicates prestressing strand.

o Indicates cut & shop bend with 3'-0" projection.

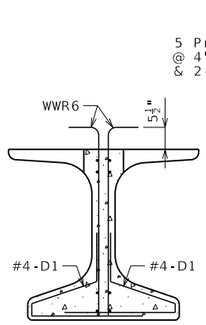

SECTION A-A

Strands not shown for clarity.

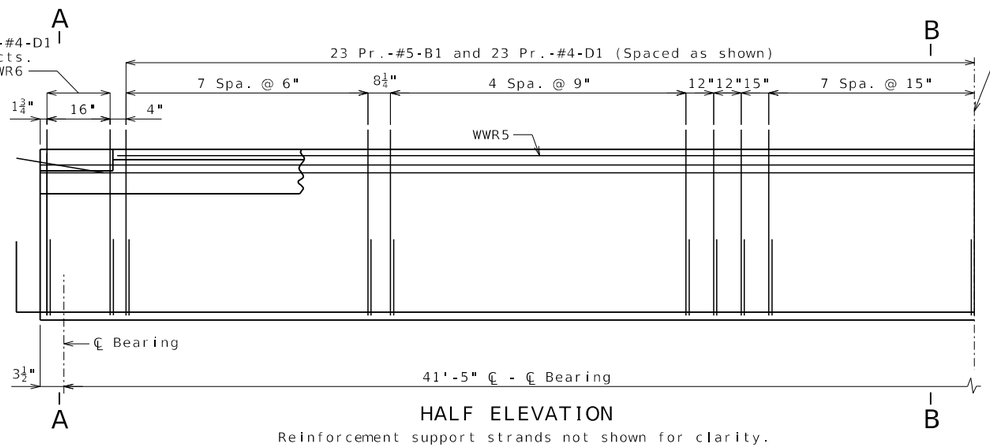

HALF ELEVATION

Reinforcement support strands not shown for clarity.

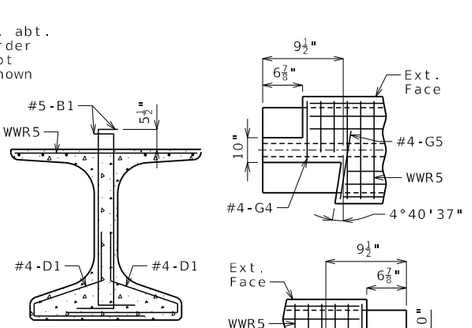

SECTION B-B

Strands not shown for clarity.

LEFT EXTERIOR GIRDER AT INTERMEDIATE BENT

Rotate 180° for right ext.

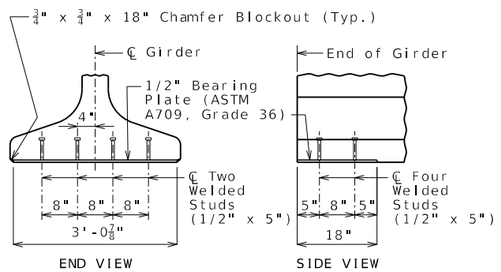

END VIEW SIDE VIEW

BEARING PLATE

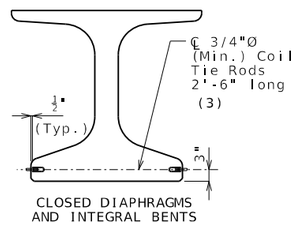

CLOSED DIAPHRAGMS AND INTEGRAL BENTS

COIL TIES

Exclude coil tie at exterior face of exterior girders except at integral end bents.

(3) 2'-5" at exterior face of exterior girders at end bents

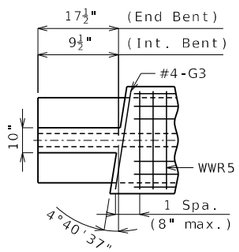

INTERIOR GIRDER AT ALL BENTS & EXTERIOR GIRDER AT END BENT

TOP FLANGE BLOCKOUT

Mirror for right advanced.

Bill of Reinforcing Steel - Each Girder

No.	Size/ Mark	Length	Shape
90	5 B1	5'-0"	11S
110	4 D1	4'-0"	9S
2	4 G3	3'-10"	20
2	4 G4	2'-3"	20
2	4 G5	2'-8"	20

Bending Diagrams

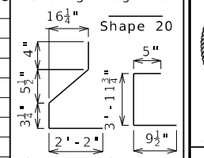

Welded Wire Reinforcement - Each Girder

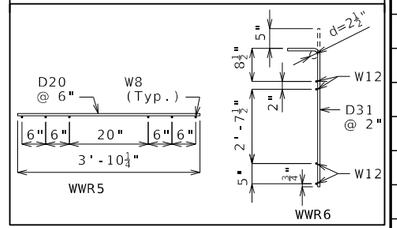

All dimensions are out to out.

Hooks and bends shall be in accordance with the CRSI Manual of Standard Practice for Detailing Reinforced Concrete Structures, Stirrup and Tie Dimensions.

Actual bar lengths are measured along centerline of bar to the nearest inch.

Minimum clearance to reinforcing shall be 1", unless otherwise shown.

All bar reinforcement shall be ASTM A706 Grade 60.

The two D1 bars may be furnished as one bar at the fabricator's option.

All B1 bars shall be epoxy coated.

G4 and G5 not required for interior girders. Half no. of G3, G4, and G5 not required for ext. girders of end spans.

General Notes:

Concrete for prestressed beams shall be Class A-1 with f'c = 8000 psi and f'ci = 6500 psi.

Use 14 strands, 0.6"Ø Grade 270, with an initial prestress force of 615.2 kips.

Pretensioned members shall be in accordance with Sec 1029.

Fabricator shall be responsible for location and design of lifting devices.

Exterior and interior girders are the same except: coil ties and top flange blockout.

The contractor shall provide bracing necessary for lateral and torsional stability of the girders during construction of the concrete slab and remove the bracing after the slab has attained 75% design strength.Contractor shall not drill holes in the girders.

For Girder Camber Diagram, see Sheet No. 29.

For location of coil ties at concrete diaphragms and integral bents, see Sheets No. 16, 17, and 26.

Alternate bar reinforcing steel details are provided and may be used. The same type of reinforcing steel shall be used for all girders in all spans.

STATE OF MISSOURI
RYAN DAVID SHAW
NUMBER PE-2011000388
PROFESSIONAL ENGINEER
THIS SHEET HAS BEEN SIGNED, SEALED AND DATED ELECTRONICALLY

DATE PREPARED 4/2/2026

ROUTE I-270 | STATE MO

DISTRICT BR | SHEET NO. 25

COUNTY ST. LOUIS

JOB NO. JSL0021

CONTRACT ID.

PROJECT NO.

BRIDGE NO. A9493

DESCRIPTION | DATE

MISSOURI HIGHWAYS AND TRANSPORTATION COMMISSION
105 WEST CAPITOL
JEFFERSON CITY, MO 65102
1-888-ASK-MODOT (1-888-275-6636)

HDR Engineering, Inc.
1001 Highlands Plaza Drive
Suite 200
St. Louis, MO 63110
314-425-8300
Certificate of Authority: 000856

NU-GIRDERS (ALTERNATE REINFORCEMENT) - SPAN (3-4)

Detailed September 2025
Checked September 2025

Note: This drawing is not to scale. Follow dimensions.

c:\pwworking\central01\d4975499\B_A9493_025_SL0021.dgn 9:21:16 AM 4/2/2026

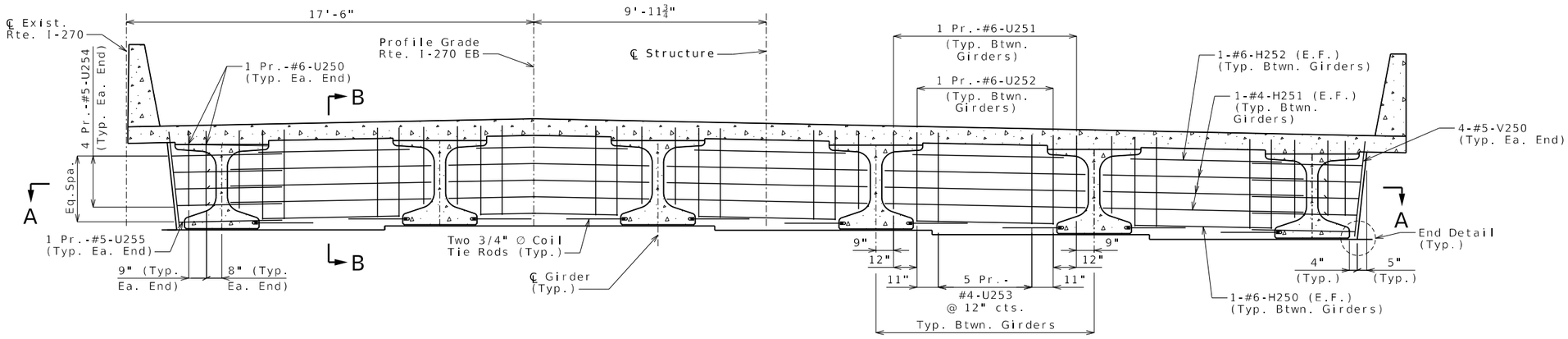

SECTION NEAR INTERMEDIATE BENT

(Looking Ahead Station)
(Normal to ℄ Structure)

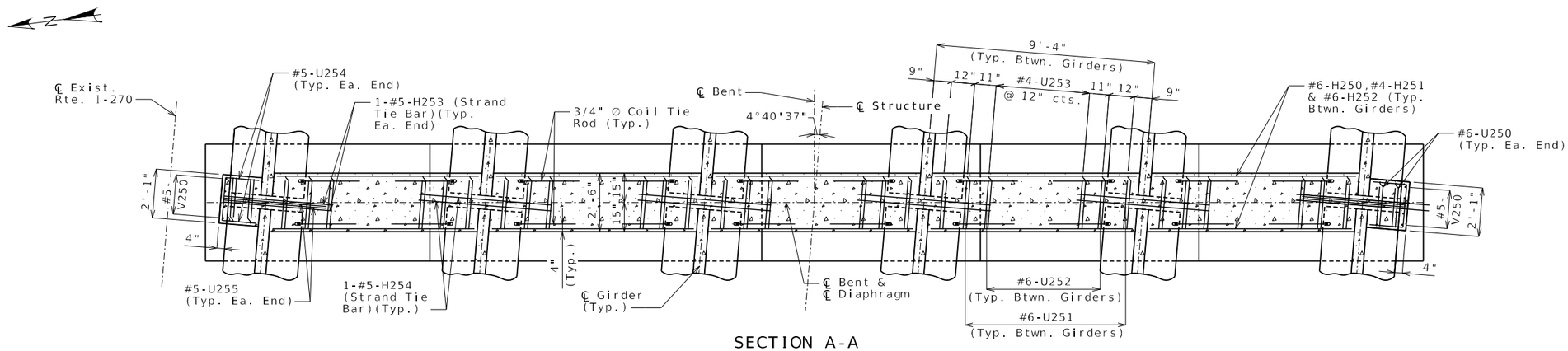

SECTION A-A

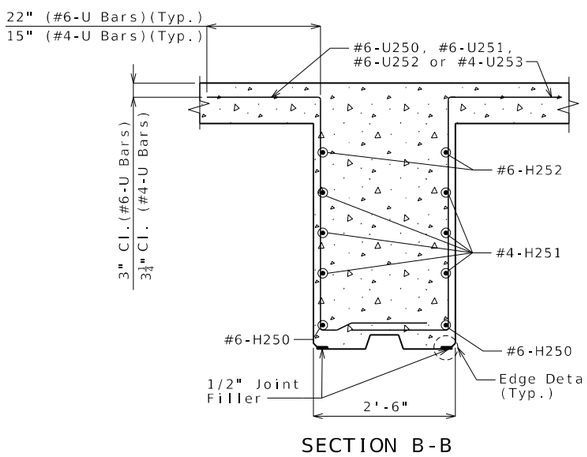

SECTION B-B

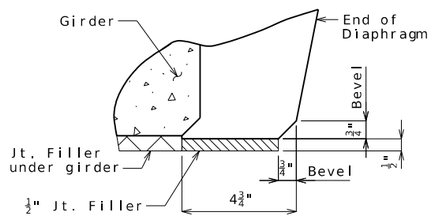

END DETAIL

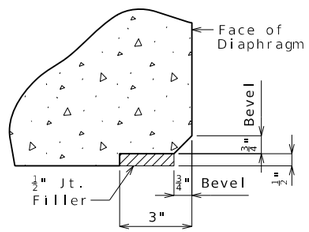

EDGE DETAIL

Notes:

Intermediate Bent No. 2 reinforcement shown. For Intermediate Bent No. 3 reinforcement, change to 300 series bars.

Diaphragm at Intermediate Bents shall be built vertical.

The concrete diaphragm at the Intermediate Bents shall be poured a minimum of 30 minutes and a maximum of 2 hours before the slab is poured.

For location of strand tie bars and details of coil tie rods, see Sheets No. 20 thru 25.

All U-bars in diaphragm are to be placed parallel to centerline of roadway.

DIAPHRAGM DETAILS AT INTERMEDIATE BENTS NO. 2 & 3

Detailed September 2025
Checked September 2025

Note: This drawing is not to scale. Follow dimensions.

RYAN DAVID SHAW
NUMBER PE-2011000368
PROFESSIONAL ENGINEER
STATE OF MISSOURI
THIS SHEET WAS SIGNED, SEALED AND DATED ELECTRONICALLY

DATE PREPARED 4/2/2026
ROUTE I-270 | STATE MO
DISTRICT BR | SHEET NO. 26
COUNTY ST. LOUIS
JOB NO. JSL0021
CONTRACT ID.
PROJECT NO.
BRIDGE NO. A9493

DESCRIPTION | DATE

MISSOURI HIGHWAYS AND TRANSPORTATION COMMISSION
105 WEST CAPITOL
JEFFERSON CITY, MO 65102
1-888-ASK-MODOT (1-888-275-6636)

HDR Engineering, Inc.
1001 Highlands Plaza Drive
Suite 200
St. Louis, MO 63110
314-425-8300
Certificate of Authority: 000856

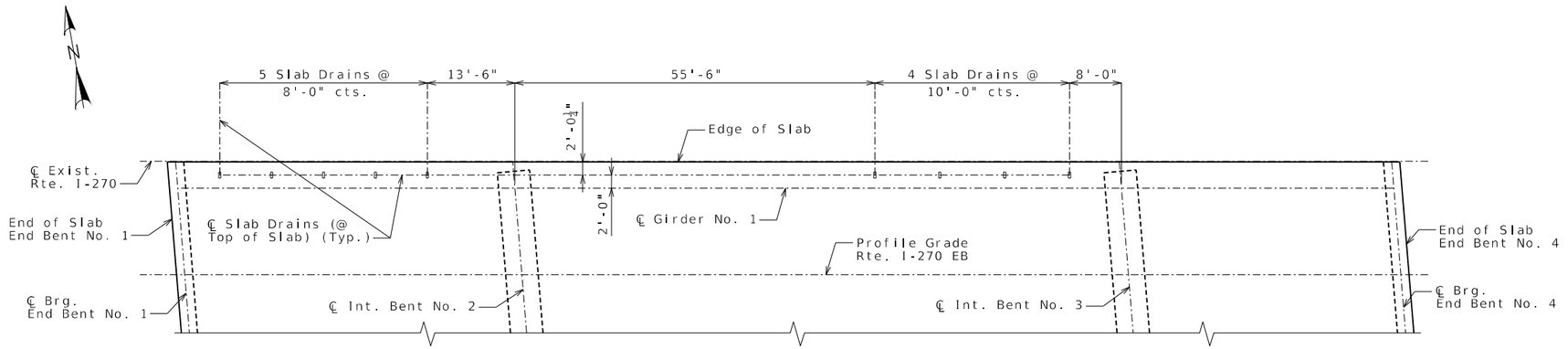

PART PLAN OF SLAB SHOWING SLAB DRAIN LOCATIONS

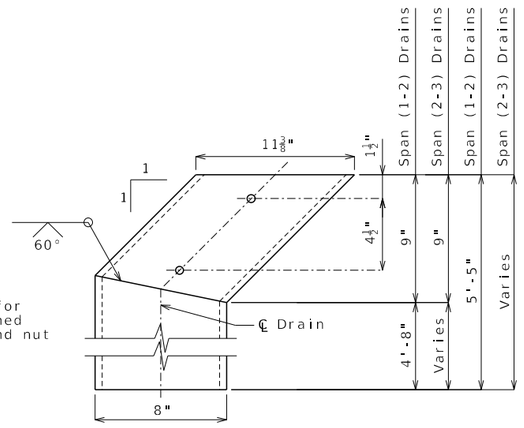

ELEVATION OF DRAIN

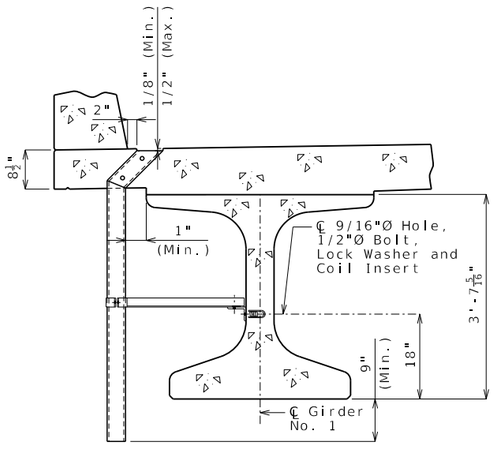

PART SECTION NEAR DRAIN AT SPAN (1-2)

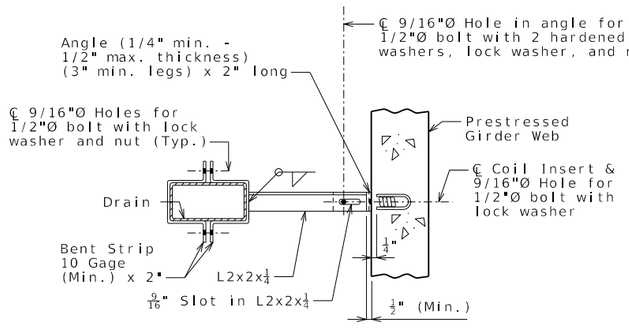

PART SECTION SHOWING BRACKET ASSEMBLY

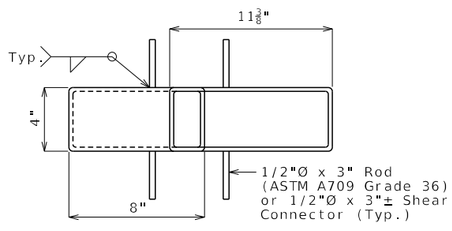

PLAN OF STEEL DRAIN OPTION

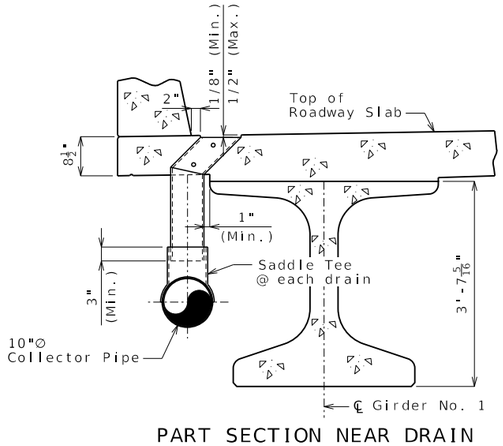

PART SECTION NEAR DRAIN AT SPAN (2-3)

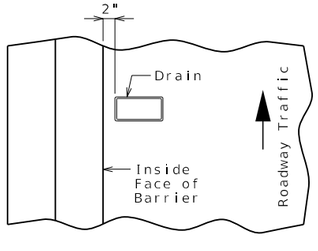

PART PLAN OF SLAB AT DRAIN

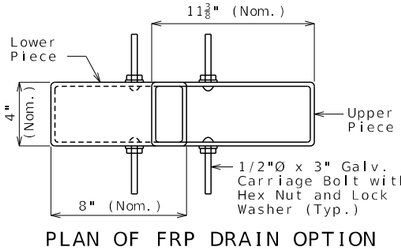

PLAN OF FRP DRAIN OPTION

General Notes:

Contractor shall have the option to construct either steel or FRP slab drains. All drains shall be of same type.

Slab drain bracket assembly shall be ASTM A709 Grade 36 steel.

Locate drains in slab by dimensions shown in Part Section Near Drain.

Reinforcing steel shall be shifted to clear drains.

The coil inserts and bracket assembly shall be galvanized in accordance with ASTM A123.

All bolts, hardened washers, lock washers and nuts shall be galvanized in accordance with AASHTO M 232 (ASTM A153), Class C.

All 1/2"Ø bolts shall be ASTM A307.

Shop drawings will not be required for the slab drains and the bracket assembly.

The coil insert required for the bracket assembly attachment shall be located on the prestressed girder shop drawings.

Coil inserts shall have a concrete pull-out strength (ultimate load) of at least 2,500 pounds in 5,000 psi concrete.

The bolt required to attach the slab drain bracket assembly to the prestressed girder web shall be supplied by the prestressed girder fabricator.

For Drainage System (On Structure) details, see Sheet No. 28.

Notes for Steel Drain:

Slab drains may be fabricated of either 1/4" welded sheets of ASTM A709 Grade 36 steel or from 1/4" structural steel tubing ASTM A500 or A501.

Outside dimensions of drains are 8" x 4".

The drains shall be galvanized in accordance with ASTM A123.

Notes for FRP Drain:

Drains shall be machine filament-wound thermosetting resin tubing meeting the requirements of ASTM D2996 with the following exceptions:

Shape of drains shall be rectangular with outside nominal dimensions of 8" x 4".

Minimum reinforced wall thickness shall be 1/4 inch.

The resin used shall be ultraviolet (UV) resistant and/or have UV inhibitors mixed throughout. Drains may have an exterior coating for additional UV resistance.

The color of the slab drain shall be gray (Federal Standard #26373). The color shall be uniform throughout the resin and any coating used.

The combination of materials used in the manufacture of the drains shall be tested for UV resistance in accordance with ASTM D4329 Cycle A. The representative material shall withstand at least 500 hours of testing with only minor discoloration and without any physical deterioration. The contractor shall furnish the results of the required ultraviolet testing prior to acceptance of the slab drains.

At the contractor's option, drains may be field cut. The method of cutting FRP slab drain shall be as recommended by the manufacturer to ensure a smooth, chip free cut.

Both upper and lower drain pieces shall be rigidly connected to each other. Drain flow shall not be obstructed. Approval of the engineer is required.

STATE OF MISSOURI
RYAN DAVID SHAW
NUMBER PE-2017000368
PROFESSIONAL ENGINEER
THIS SHEET HAS BEEN SIGNED, SEALED AND DATED ELECTRONICALLY

DATE PREPARED 4/2/2026

ROUTE I-270 | STATE MO

DISTRICT BR | SHEET NO. 27

COUNTY ST. LOUIS

JOB NO. JSL0021

CONTRACT ID.

PROJECT NO.

BRIDGE NO. A9493

DATE	DESCRIPTION

MISSOURI HIGHWAYS AND TRANSPORTATION COMMISSION
105 WEST CAPITOL
JEFFERSON CITY, MO 65102
(MO 65102-0270)
1-888-ASK-MODOT (1-888-275-6636)

HDR Engineering, Inc.
1001 Highlands Plaza Drive
Suite 200
St. Louis, MO 63110
314-425-8300
Certificate of Authority: 000856

SLAB DRAINS

Detailed September 2025
Checked September 2025

Note: This drawing is not to scale. Follow dimensions.

c:\pwworking\central01\d4975499\B_A9493_027_SL0021.dgn 9:21:31 AM 4/2/2026

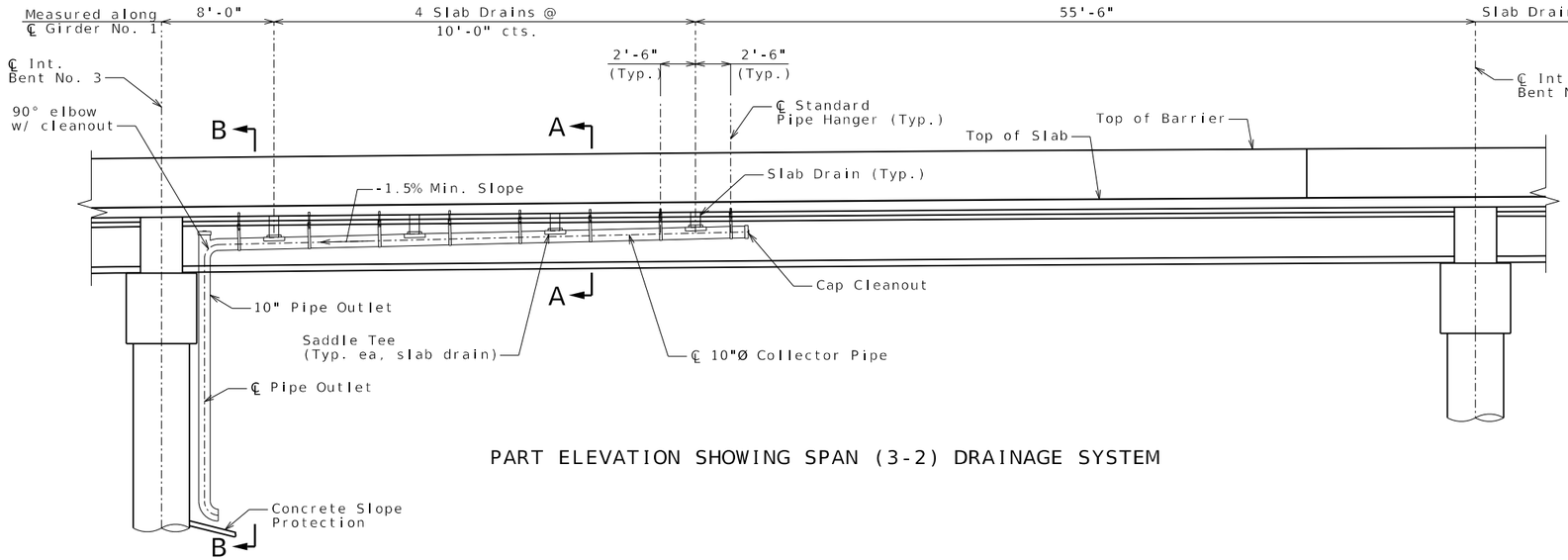

PART ELEVATION SHOWING SPAN (3-2) DRAINAGE SYSTEM

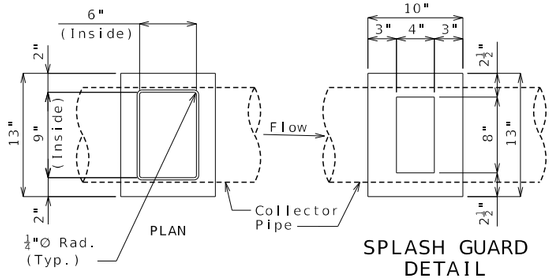

SPLASH GUARD DETAIL

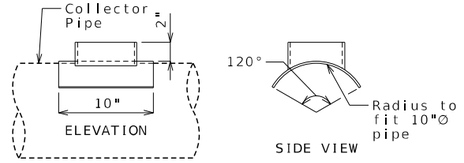

OUTLET SADDLE DETAILS

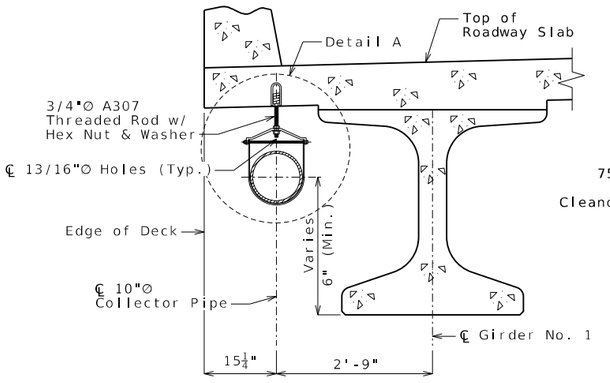

SECTION A-A

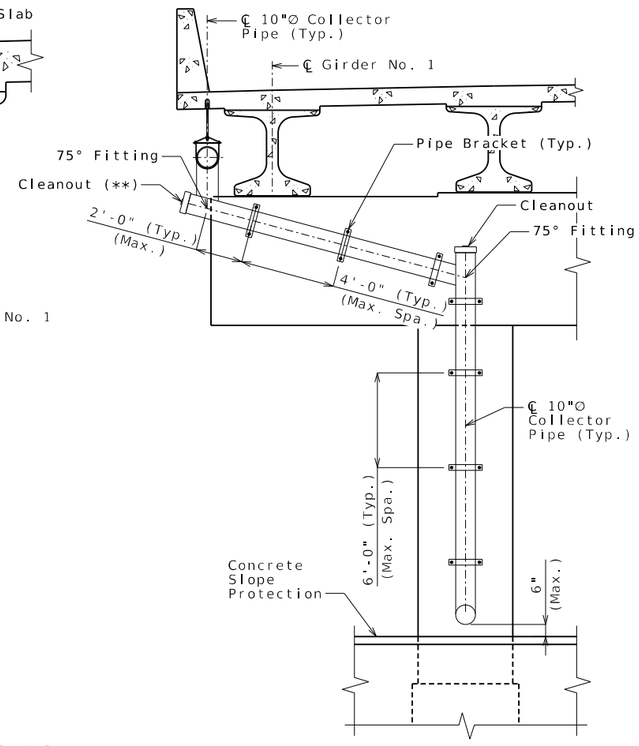

VIEW B-B

(Looking Ahead Station)

(**) Cleanout location to be coordinated with Drainage System (On Structure) for Bridge No. A9494.

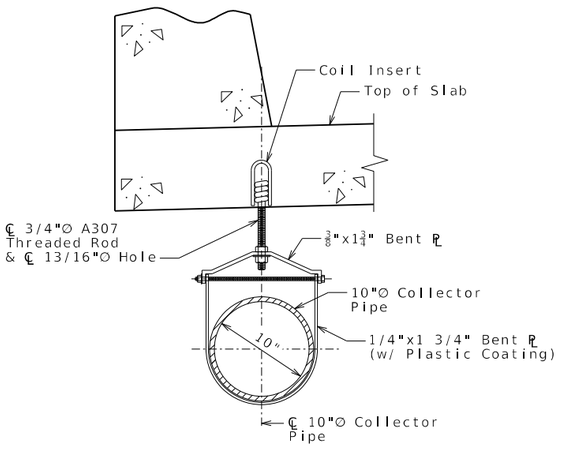

DETAIL A

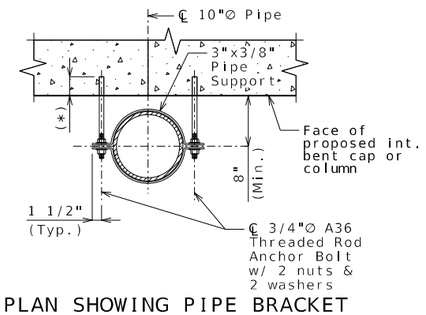

PLAN SHOWING PIPE BRACKET

(*) Anchor rod embedment based on manufacturer's recommendation. Contractor to avoid reinforcement in int. bent cap and column when installing pipe supports.

Notes:

All pipes, elbows, saddles, fittings, guards and all other drainage components shall be Reinforced Thermosetting Resin Pipe (RTRP), see Special Provisions.

Furnishing, fabricating and erecting drain pipes, fittings, saddles, guards, pipe supports, bolts and other miscellaneous items will be considered completely covered by the Contract Lump Sum Price for Drainage System (On Structure).

Piping shall be fabricated from field checked dimensions after installation of slab drains.

Provide cleanouts with a male threaded PVC plug where shown on the plans.

The color of the Reinforced Thermosetting Resin Pipe (RTRP) collection system shall be gray (Federal Standard 26373). The color shall be uniform throughout the resin and any coating used.

Coil inserts shall have a concrete pull-out strength (ultimate load) of at least 2,500 pounds in 4,000 psi concrete.

Pipe hanger assembly shall be ASTM A709 Grade 36 steel.

Standard Pipe Hangers shall be placed along ℄ 10" dia. Collector Pipe, spaced longitudinally as shown in Elevation.

Drain, saddle tee and collector pipe shall be rigidly connected to each other. Drain flow shall not be obstructed. Approval of the engineer is required.

All coil inserts, bolts, hardened washers, lock washers and nuts shall be galvanized in accordance with AASHTO M 232 (ASTM A153), Class C.

DRAINAGE SYSTEM (ON STRUCTURE)

Detailed September 2025
Checked September 2025

Note: This drawing is not to scale. Follow dimensions.

STATE OF MISSOURI
RYAN DAVID SHAW
NUMBER PE-2017003368
PROFESSIONAL ENGINEER
THIS SHEET HAS BEEN SIGNED, SEALED AND DATED ELECTRONICALLY

DATE PREPARED 4/2/2026
ROUTE I-270 | STATE MO
DISTRICT BR | SHEET NO. 28
COUNTY ST. LOUIS
JOB NO. JSL0021
CONTRACT ID.
PROJECT NO.
BRIDGE NO. A9493

DESCRIPTION | DATE

MISSOURI HIGHWAYS AND TRANSPORTATION COMMISSION
105 WEST CAPITOL
JEFFERSON CITY, MO 65102
1-888-ASK-MODOT (1-888-275-6636)
HDR Engineering, Inc.
1001 Highlands Plaza Drive
Suite 200
St. Louis, MO 63110
314-425-8300
Certificate of Authority: 000856

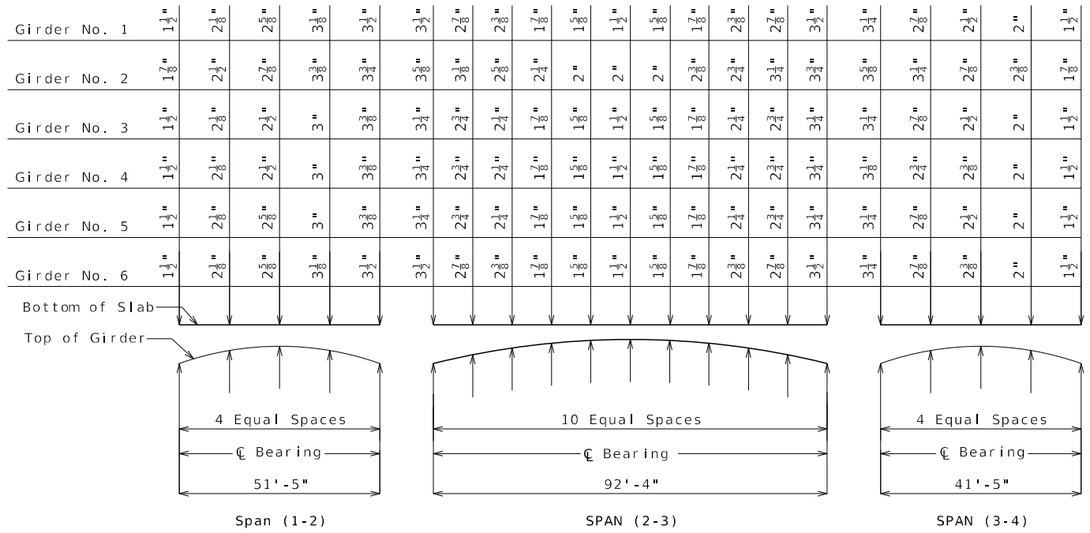

THEORETICAL SLAB HAUNCHING DIAGRAM

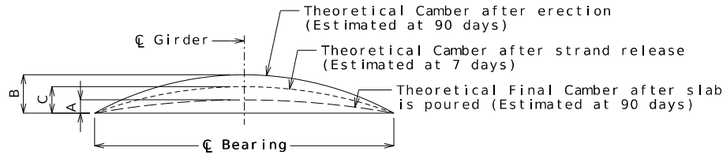

Girder	Span (1-2)			Span (2-3)			Span (3-4)		
	A	B	C	A	B	C	A	B	C
Ext. Girder	⅛"	¼"	¼"	2½"	4⅜"	3"	⅛"	⅛"	⅛"
Int. Girder	⅛"			2⅜"			⅛"		

GIRDER CAMBER DIAGRAM

Conversion Factors for Girder Camber (Estimated at 90 days):

0.25 pt. = 0.7125 x 0.5 pt. - Span (1-2) & Span (3-4)

0.1 pt. = 0.314 x 0.5 pt.
0.2 pt. = 0.593 x 0.5 pt.
0.3 pt. = 0.813 x 0.5 pt.
0.4 pt. = 0.952 x 0.5 pt.
- Span (2-3)

Theoretical Bottom of Slab Elevations at Centerline of Girder (Prior to forming for slab) (Estimated at 90 days)

Girder Number	Span (1-2) (51'-5" ℄ Brg. - ℄ Brg.)				
	℄ Brg.	.25	.50	.75	℄ Brg.
1	501.41	501.39	501.36	501.31	501.25
2	501.59	501.58	501.55	501.50	501.43
3	501.57	501.55	501.52	501.47	501.40
4	501.38	501.36	501.33	501.28	501.21
5	501.19	501.17	501.14	501.09	501.02
6	501.00	500.99	500.95	500.90	500.83

Girder Number	Span (2-3) (92'-4" ℄ Brg. - ℄ Brg.)										
	℄ Brg.	.10	.20	.30	.40	.50	.60	.70	.80	.90	℄ Brg.
1	501.24	501.25	501.24	501.21	501.17	501.11	501.03	500.93	500.81	500.68	500.54
2	501.43	501.43	501.43	501.41	501.37	501.31	501.22	501.12	501.00	500.86	500.72
3	501.40	501.40	501.40	501.37	501.34	501.27	501.19	501.09	500.97	500.83	500.68
4	501.20	501.21	501.20	501.18	501.14	501.08	501.00	500.90	500.77	500.63	500.49
5	501.01	501.02	501.01	500.99	500.95	500.89	500.81	500.70	500.58	500.44	500.29
6	500.82	500.83	500.81	500.79	500.75	500.68	500.60	500.50	500.38	500.24	500.10

Girder Number	Span (3-4) (41'-5" ℄ Brg. - ℄ Brg.)				
	℄ Brg.	.25	.50	.75	℄ Brg.
1	500.52	500.42	500.30	500.17	500.03
2	500.70	500.59	500.48	500.35	500.21
3	500.67	500.56	500.44	500.31	500.17
4	500.47	500.36	500.25	500.12	499.98
5	500.28	500.17	500.05	499.92	499.78
6	500.08	499.97	499.85	499.72	499.58

Elevations are based on a constant slab thickness of 8 1/2" and include allowance for theoretical dead load deflections due to weight of slab and Type D barriers.

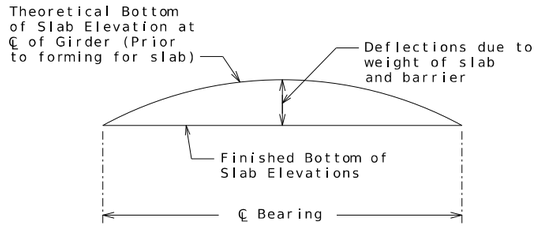

TYPICAL SLAB ELEVATIONS DIAGRAM

Notes:

If girder camber is different from that shown in the camber diagram, in order to maintain minimum slab thickness, an adjustment of the slab haunches, an increase in slab thickness or a raise in grade uniformly throughout the structure shall be necessary. The haunch shall be limited to ensure the projecting girder reinforcement is embedded into slab at least 2 inches. No payment will be made for additional labor or materials required for variation in haunching, slab thickness or grade adjustment.

Concrete in the slab haunches is included in the Estimated Quantities for Slab on Concrete NU-Girder.

CAMBER, SLAB ELEVATIONS AND HAUNCHING

Detailed September 2025
Checked September 2025

Note: This drawing is not to scale. Follow dimensions.

RYAN DAVID SHAW
ENGINEER
PE-2017003368
STATE OF MISSOURI
PROFESSIONAL ENGINEER
THIS SHEET HAS BEEN SIGNED, SEALED AND DATED ELECTRONICALLY

DATE PREPARED 4/2/2026
ROUTE I-270 | STATE MO
DISTRICT BR | SHEET NO. 29
COUNTY ST. LOUIS
JOB NO. JSL0021
CONTRACT ID.
PROJECT NO.
BRIDGE NO. A9493

DESCRIPTION | DATE

MISSOURI HIGHWAYS AND TRANSPORTATION COMMISSION
105 WEST CAPITOL
JEFFERSON CITY, MO 65102
1-888-ASK-MODOT (1-888-275-6636)

HDR Engineering, Inc.
1001 Highlands Plaza Drive
Suite 200
St. Louis, MO 63110
314-425-8300
Certificate of Authority: 000856

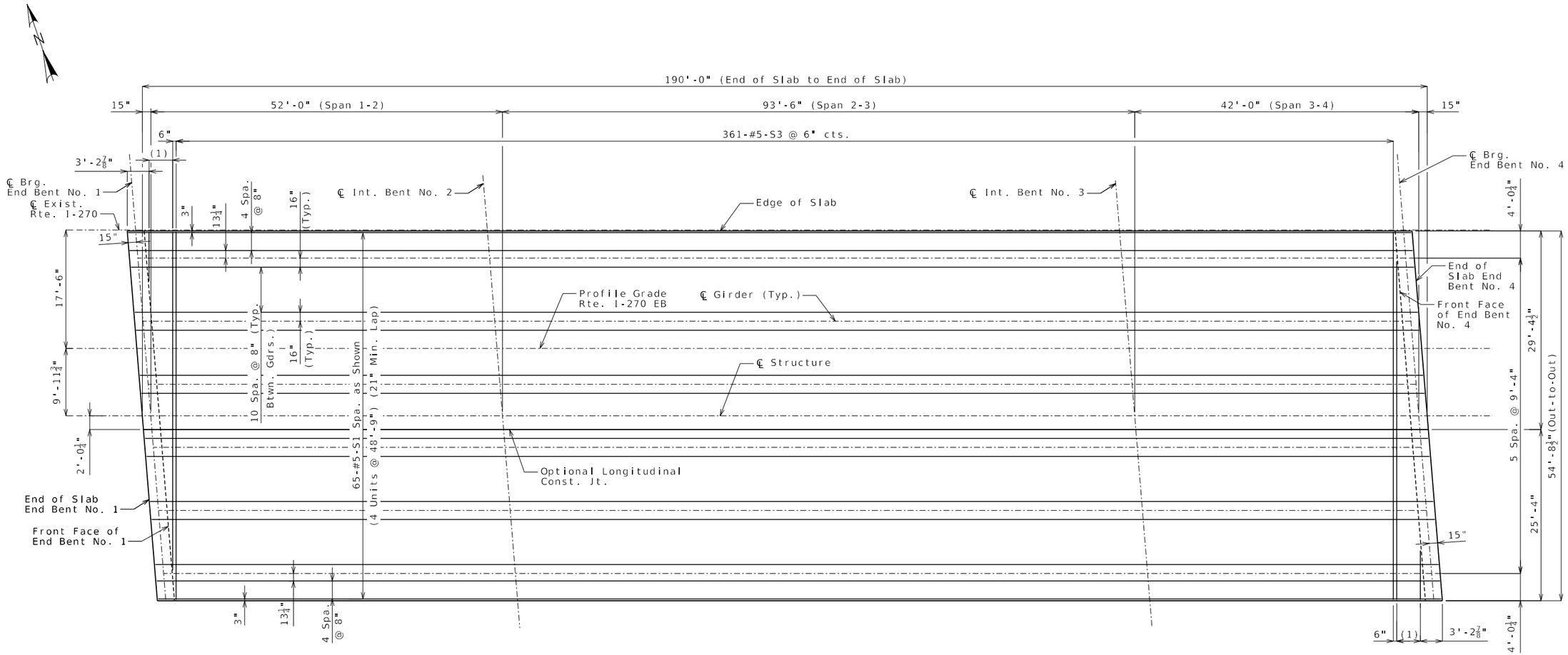

(1) 8-#5-S2 @ 6" cts.

Notes:

Longitudinal slab dimensions are measured horizontally.

For Typical Slab Section and Slab Pouring Sequence, see Sheet No. 32.

For details and reinforcement of Type D Barrier not shown, see Sheets No. 33 & 34.

For Theoretical Slab Haunching Diagram and Theoretical Bottom of Slab Elevations, see Sheet No. 29.

For Staging Plans, see Sheets No. 4 thru 6.

For location of coil inserts for pipe hangers, see Sheet No. 28.

PLAN OF SLAB REINFORCEMENT - BOTTOM

Detailed September 2025
Checked September 2025

Note: This drawing is not to scale. Follow dimensions.

STATE OF MISSOURI
RYAN DAVID SHAW
NUMBER PE-2017000368
PROFESSIONAL ENGINEER
THIS SHEET HAS BEEN SIGNED, SEALED AND DATED ELECTRONICALLY

DATE PREPARED 4/2/2026
ROUTE I-270 | STATE MO
DISTRICT BR | SHEET NO. 30
COUNTY ST. LOUIS
JOB NO. JSL0021
CONTRACT ID.
PROJECT NO.
BRIDGE NO. A9493

DESCRIPTION | DATE

MISSOURI HIGHWAYS AND TRANSPORTATION COMMISSION
105 WEST CAPITOL
JEFFERSON CITY, MO 65102
1-888-ASK-MODOT (1-888-275-6636)

HDR Engineering, Inc.
1001 Highlands Plaza Drive
Suite 200
St. Louis, MO 63110
314-425-8300
Certificate of Authority: 000856

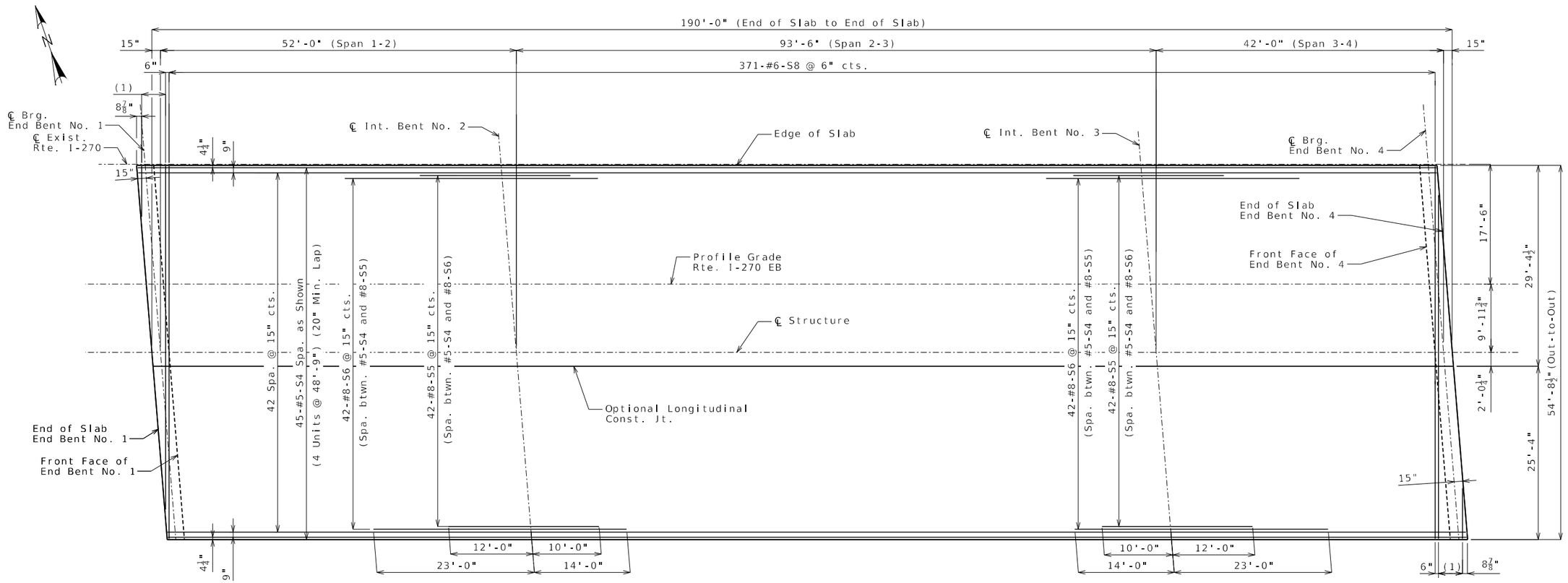

(1) 8-#6-S7 @ 6" cts. = 3'-6"

Notes:

Longitudinal slab dimensions are measured horizontally.

For Typical Slab Section and Slab Pouring Sequence, see Sheet No. 32.

For details and reinforcement of Type D Barrier not shown, see Sheets No. 33 & 34.

For Theoretical Slab Haunching Diagram and Theoretical Bottom of Slab Elevations, see Sheet No. 29.

For Staging Plans, see Sheets No. 4 thru 6.

For location of coil inserts for pipe hangers, see Sheet No. 28.

PLAN OF SLAB REINFORCEMENT - TOP

Detailed September 2025
Checked September 2025

Note: This drawing is not to scale. Follow dimensions.

STATE OF MISSOURI
RYAN DAVID SHAW
ENGINEER
PE-2017000368
PROFESSIONAL ENGINEER
THIS SHEET HAS BEEN SIGNED, SEALED AND DATED ELECTRONICALLY

DATE PREPARED 4/2/2026
ROUTE I-270 | STATE MO
DISTRICT BR | SHEET NO. 31
COUNTY ST. LOUIS
JOB NO. JSL0021
CONTRACT ID.
PROJECT NO.
BRIDGE NO. A9493

DESCRIPTION | DATE

MISSOURI HIGHWAYS AND TRANSPORTATION COMMISSION
MoDOT
105 WEST CAPITOL
JEFFERSON CITY, MO 65102
1-888-ASK-MODOT (1-888-275-6636)

HDR Engineering, Inc.
1001 Highlands Plaza Drive
Suite 200
St. Louis, MO 63110
314-425-8300
Certificate of Authority: 000856

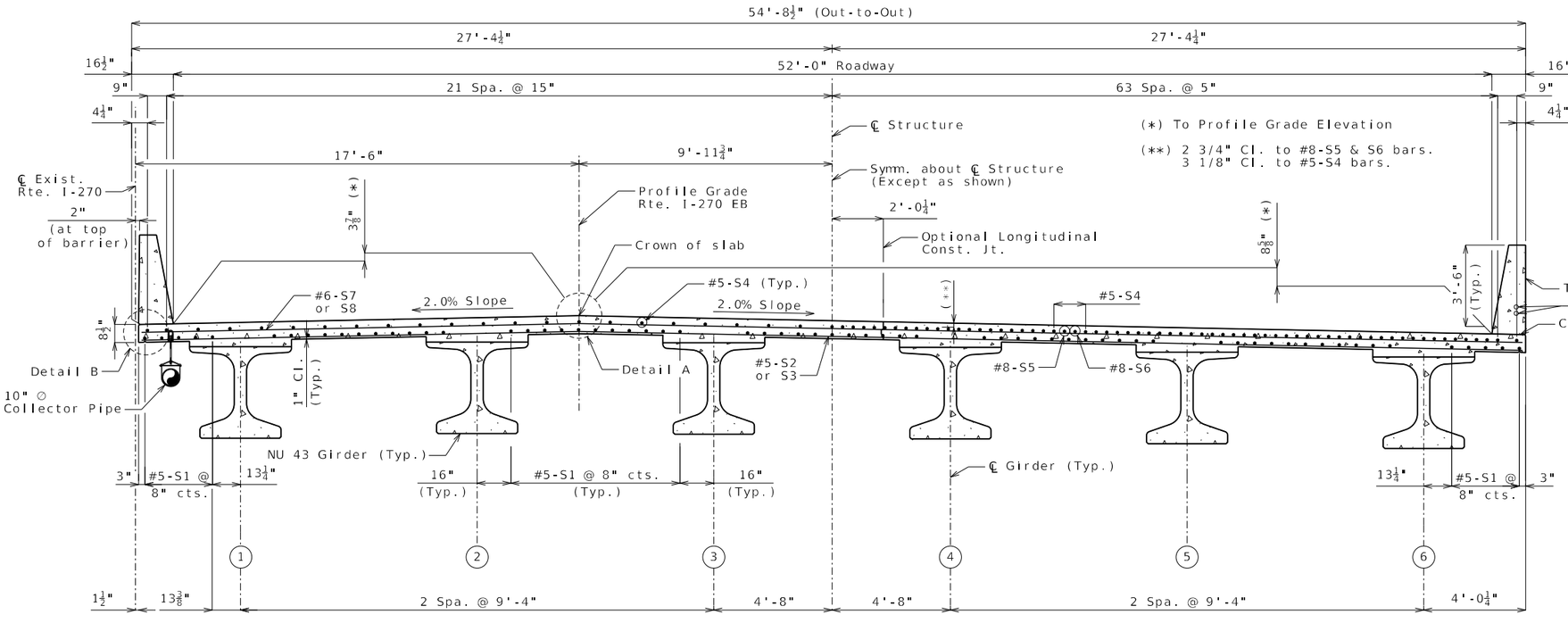

HALF SECTION NEAR MIDSPAN

HALF SECTION NEAR INTERMEDIATE BENT

SECTION THRU SLAB

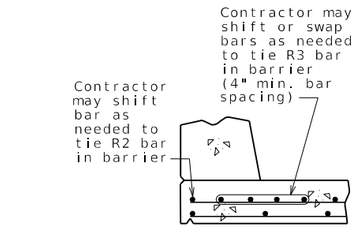

OPTIONAL SHIFTING TOP BARS AT BARRIER

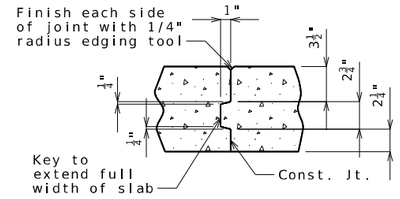

SLAB CONSTRUCTION JOINT

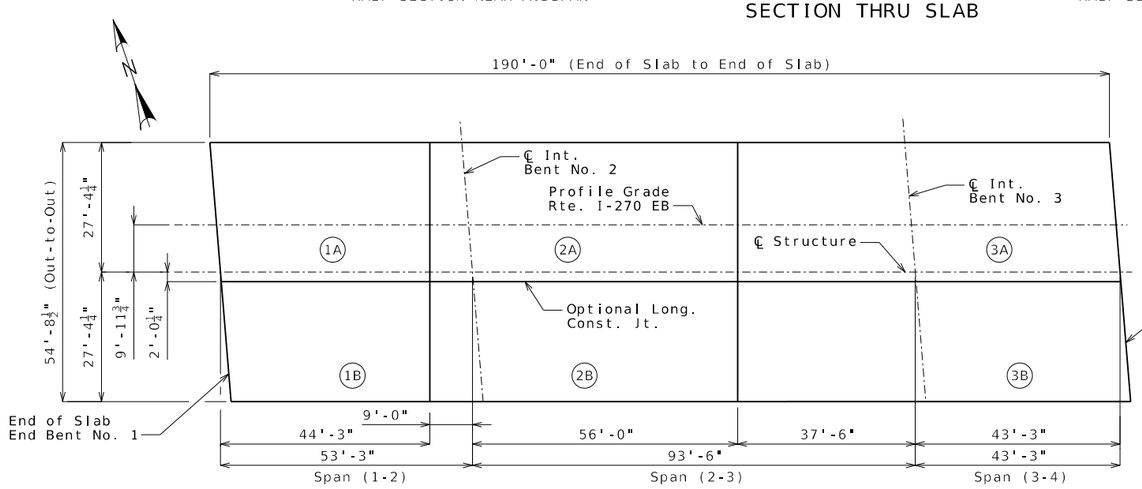

SLAB POURING SEQUENCE

	Sequence of Pours			Min. Rate of Pour Cu. Yds./Hr.
	Direction			With Retarder
Basic Sequence	1	2	3	25
	End to 2	1 to 3	2 to End	
Alternate pours to the basic skip sequence are subject to the approval of the engineer in accordance with Sec 703.				
Alternate A Pours	1 + 2		3	26
	End to 3		2 to End	
Alternate B Pours	1 + 2 + 3			44
	End to End			

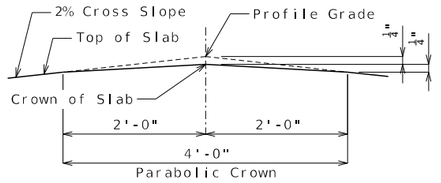

DETAIL A

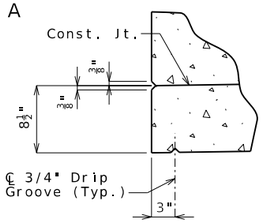

DETAIL B

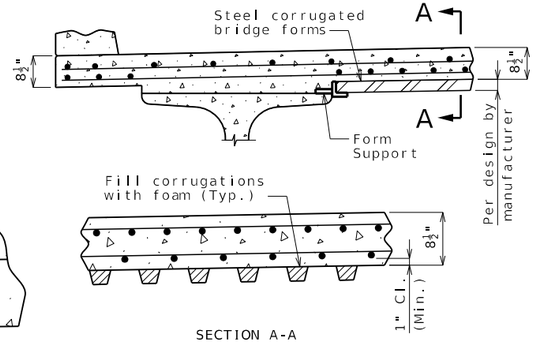

SECTION A-A

OPTIONAL STAY-IN-PLACE FORM DETAILS

If the optional longitudinal construction joint is omitted, the contractor shall submit a slab pour sequence for approval by the engineer.

The contractor shall furnish an approved retarder to retard the set of the concrete to 2.5 hours and shall pour and satisfactorily finish the slab pours at the given rate.

The concrete diaphragm at the intermediate bents and integral end bents shall be poured a minimum of 30 minutes and a maximum of 2 hours before the slab is poured.

The longitudinal construction joint may be omitted with the approval of the engineer. When the longitudinal construction joint is omitted, the minimum rate of pour for alternate pouring sequence shall be increased by a factor of 1.86.

Notes:

For Plan of Slab Reinforcement, see Sheets No. 30 & 31.

For details and reinforcement of Type D Barrier, see Sheets No. 33 & 34.

For Theoretical Slab Haunching Diagram, Girder Camber Diagram and Theoretical Bottom of Slab Elevations, see Sheet No. 29.

For details and location of slab drains, see Sheet No. 27.

For conduit and junction box details, see Sheet No. 37.

For Staging Plans, see Sheets No. 4 thru 6.

For location of coil inserts for pipe hangers, see Sheet No. 28.

TYPICAL SLAB SECTION AND DETAILS

Detailed September 2025
Checked September 2025

Note: This drawing is not to scale. Follow dimensions.

STATE OF MISSOURI
RYAN DAVID SHAW
NUMBER PE-2011000388
PROFESSIONAL ENGINEER
THIS SHEET HAS BEEN SIGNED, SEALED AND DATED ELECTRONICALLY

DATE PREPARED 4/6/2026

ROUTE I-270 | STATE MO

DISTRICT BR | SHEET NO. 32

COUNTY ST. LOUIS

JOB NO. JSL0021

CONTRACT ID.

PROJECT NO.

BRIDGE NO. A9493

DESCRIPTION

DATE

MISSOURI HIGHWAYS AND TRANSPORTATION COMMISSION
105 WEST CAPITOL
JEFFERSON CITY, MO 65102
1-888-ASK-MODOT (1-888-275-6636)

HDR Engineering, Inc.
1001 Highlands Plaza Drive
Suite 200
St. Louis, MO 63110
314-425-8300
Certificate of Authority: 000856

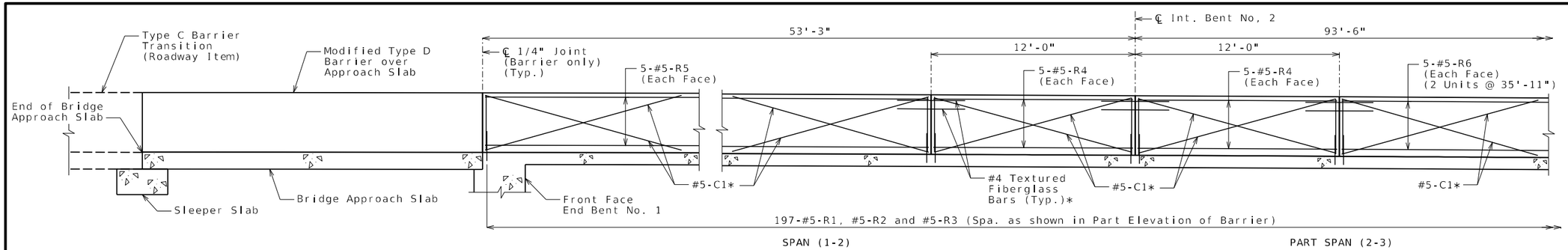

ELEVATION OF LEFT BARRIER

Longitudinal dimensions are horizontal.

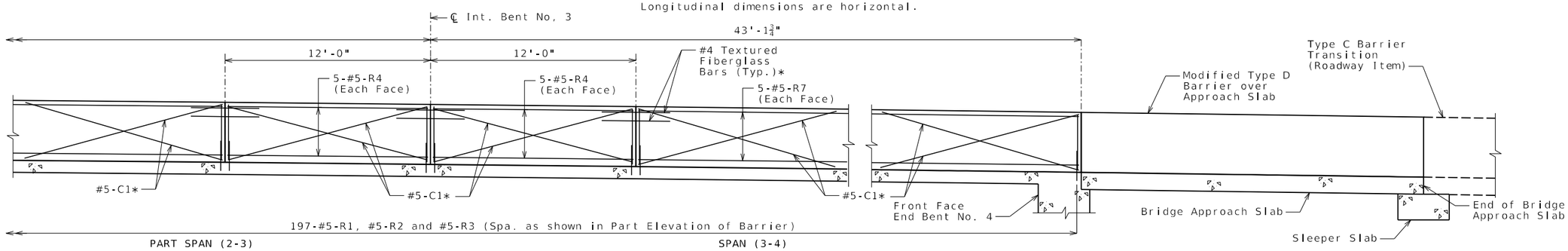

ELEVATION OF LEFT BARRIER

Longitudinal dimensions are horizontal.

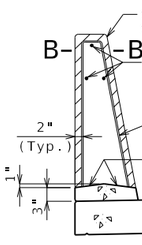

SECTION THRU SAW CUT JOINT

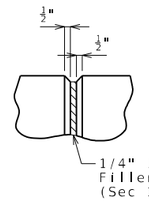

PART ELEVATION AT FORMED JOINT

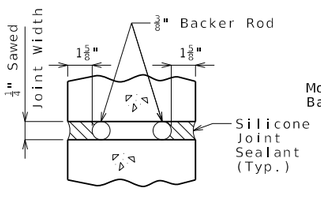

SECTION B-B

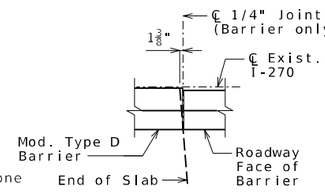

(AT END BENT NO. 1)

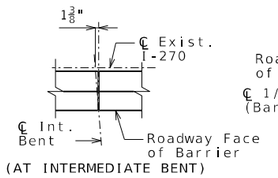

(AT INTERMEDIATE BENT)

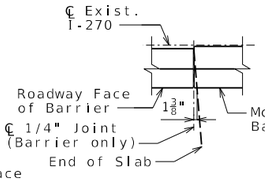

(AT END BENT NO. 4)

PART PLAN SHOWING JOINT LOCATION

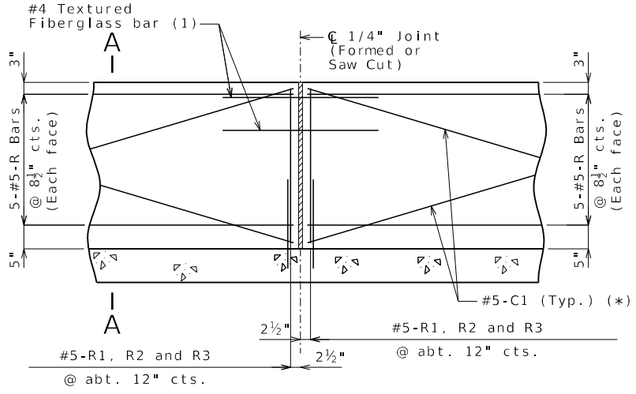

PART ELEVATION OF BARRIER

(1) Four feet long, centered on joint, slip-formed option only.

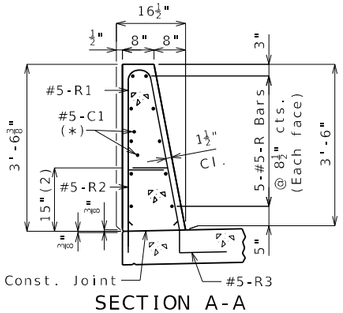

SECTION A-A

Use a minimum lap of 2'-6" for #5 horizontal barrier bars.

The cross-sectional area above the slab is 3.60 square feet.

(2) To top of bar

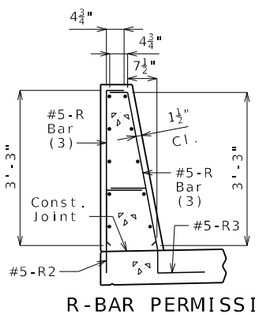

R-BAR PERMISSIBLE ALTERNATE SHAPE

(3) The R1 bar may be separated into two bars as shown, at the contractor's option, only when slip forming is not used. (All dimensions are out to out.)

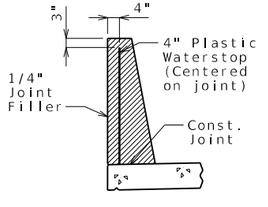

WATERSTOP DETAIL

Plastic waterstop shall be placed in all formed joints, except structures with superelevation, use on lower joints only.

Cost of plastic waterstop, complete in place, will be considered completely covered by the contract unit price for Type D Barrier.

General Notes:

(*) Slip-formed option only.

Conventional forming or slip forming may be used. Saw cut joints may be used with conventional forming.

Top of barrier shall be built parallel to grade and barrier joints normal to grade.

All exposed edges of barrier shall have either a 1/2-inch radius or a 3/8-inch bevel, unless otherwise noted.

Payment for all concrete and reinforcement, complete in place, will be considered completely covered by the contract unit price for Type D Barrier per linear foot.

Concrete in barrier shall be Class B-1.

Measurement of barrier is to the nearest linear foot for each structure, measured along the outside top of slab from end of slab to end of slab.

Concrete traffic barrier delineators shall be placed on top of the barrier as shown on Missouri Standard Plan 617.10 and in accordance with Sec 617. Delineators on bridges with two-lane, two-way traffic shall have retroreflective sheeting on both sides. Concrete traffic barrier delineators will be considered completely covered by the contract unit price for Type D Barrier.

Joint sealant and backer rods shall be in accordance with Sec 717 for silicone joint sealant for saw cut and formed joints.

For slip-formed option, both sides of barrier shall have a vertically broomed finish and the top shall have a transversely broomed finish.

Plastic waterstop shall not be used with saw cut joints.

For Modified Type D Barrier details, see Sheet No. 36.

TYPE D BARRIER (LEFT)

Detailed September 2025
Checked September 2025

Note: This drawing is not to scale. Follow dimensions.

RYAN DAVID SHAW
NUMBER PE-2017000368
PROFESSIONAL ENGINEER
STATE OF MISSOURI
THIS SHEET HAS BEEN SIGNED, SEALED AND DATED ELECTRONICALLY

DATE PREPARED 4/2/2026

ROUTE	STATE
I-270	MO
DISTRICT	SHEET NO.
BR	33

COUNTY: ST. LOUIS
JOB NO.: JSL0021
CONTRACT ID.:
PROJECT NO.:
BRIDGE NO.: A9493

DESCRIPTION / DATE

MISSOURI HIGHWAYS AND TRANSPORTATION COMMISSION
105 WEST CAPITOL
JEFFERSON CITY, MO 65102
1-888-ASK-MODOT (1-888-275-6636)
HDR Engineering, Inc.
1001 Highlands Plaza Drive
Suite 200
St. Louis, MO 63110
314-425-8300
Certificate of Authority: 000856

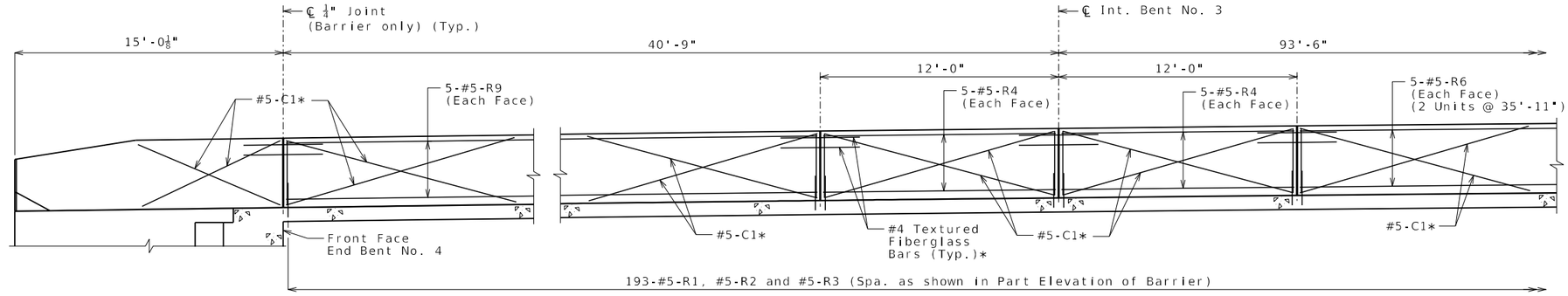

ELEVATION OF RIGHT BARRIER

Longitudinal dimensions are horizontal.

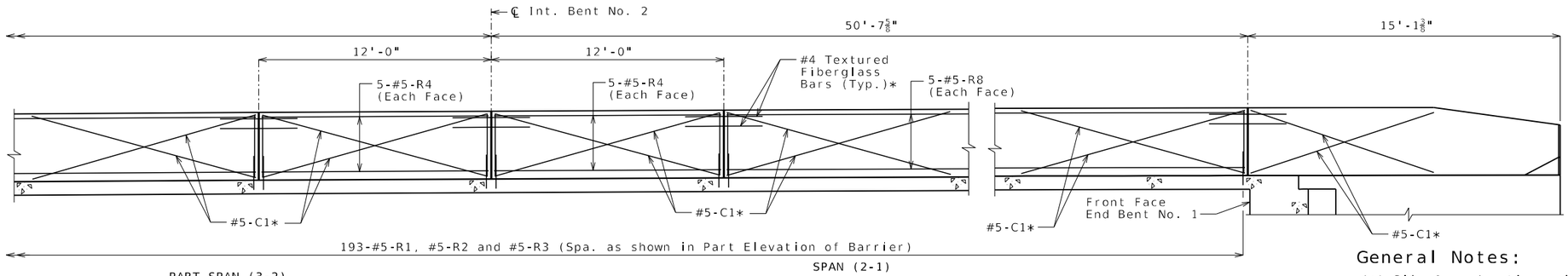

ELEVATION OF RIGHT BARRIER

Longitudinal dimensions are horizontal.

General Notes:

(*) Slip-formed option only.

Conventional forming or slip forming may be used. Saw cut joints may be used with conventional forming.

Top of barrier shall be built parallel to grade and barrier joints (except at end bents) normal to grade.

All exposed edges of barrier shall have either a 1/2-inch radius or a 3/8-inch bevel, unless otherwise noted.

Payment for all concrete and reinforcement, complete in place, will be considered completely covered by the contract unit price for Type D Barrier per linear foot.

Concrete in barrier shall be Class B-1.

Measurement of barrier is to the nearest linear foot for each structure, measured along the outside top of slab from end of wing to end of wing.

Concrete traffic barrier delineators shall be placed on top of the barrier as shown on Missouri Standard Plan 617.10 and in accordance with Sec 617. Delineators on bridges with two-lane, two-way traffic shall have retroreflective sheeting on both sides. Concrete traffic barrier delineators will be considered completely covered by the contract unit price for Type D Barrier.

Joint sealant and backer rods shall be in accordance with Sec 717 for silicone joint sealant for saw cut and formed joints.

For slip-formed option, both sides of barrier shall have a vertically broomed finish and the top shall have a transversely broomed finish.

Plastic waterstop shall not be used with saw cut joints.

Reinforcing steel shall be shifted in the field to clear resin anchors for sign support brackets.

For conduit details, see Sheet No. 37.

For sign support details, see Sheet No. 39.

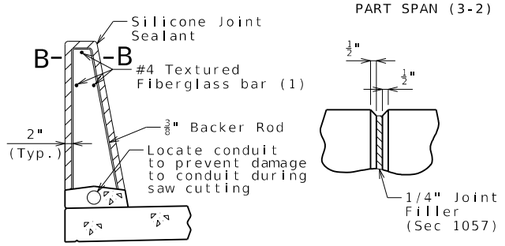

SECTION THRU SAW CUT JOINT

PART ELEVATION AT FORMED JOINT

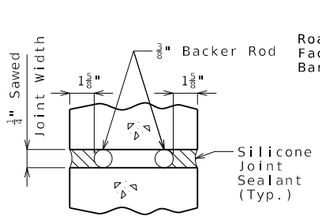

SECTION B-B

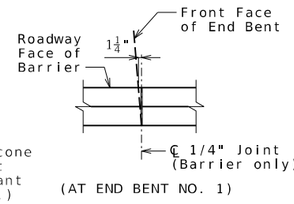

(AT END BENT NO. 1)

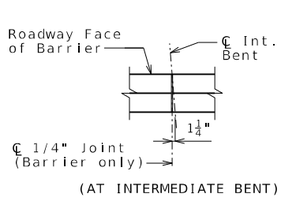

(AT INTERMEDIATE BENT)

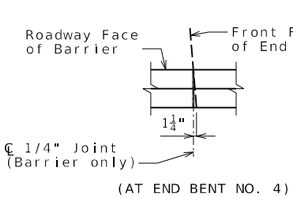

(AT END BENT NO. 4)

PART PLAN SHOWING JOINT LOCATION

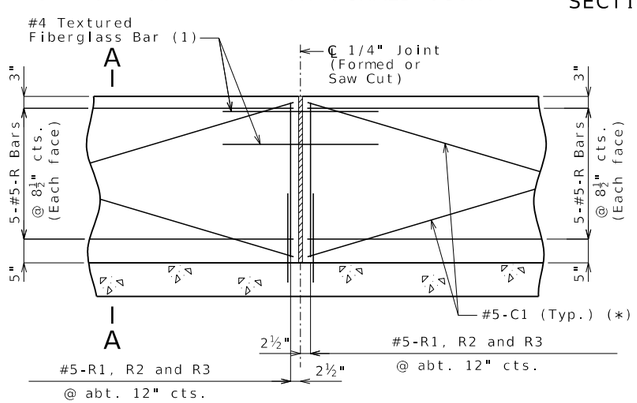

PART ELEVATION OF BARRIER

(1) Four feet long, centered on joint, slip-formed option only

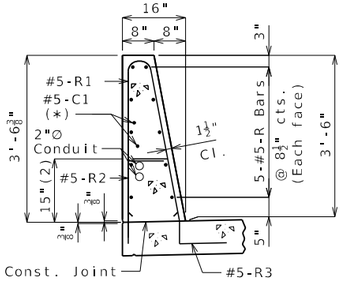

SECTION A-A

Use a minimum lap of 2'-6" for #5 horizontal barrier bars.

The cross-sectional area above the slab is 3.52 square feet.

(2) To top of bar

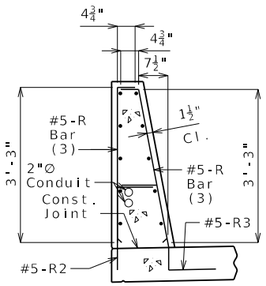

R-BAR PERMISSIBLE ALTERNATE SHAPE

(3) The R1 bar may be separated into two bars as shown, at the contractor's option, only when slip forming is not used. (All dimensions are out to out.)

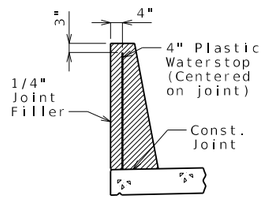

WATERSTOP DETAIL

Plastic waterstop shall be placed in all formed joints, except structures with superelevation, use on lower joints only.

Cost of plastic waterstop, complete in place, will be considered completely covered by the contract unit price for Type D Barrier.

TYPE D BARRIER (RIGHT)

Detailed September 2025
Checked September 2025

Note: This drawing is not to scale. Follow dimensions.

RYAN DAVID SHAW
NUMBER PE-2011000368
STATE OF MISSOURI
PROFESSIONAL ENGINEER
THIS SHEET WAS SIGNED, SEALED AND DATED ELECTRONICALLY

DATE PREPARED 4/2/2026
ROUTE I-270 | STATE MO
DISTRICT BR | SHEET NO. 34
COUNTY ST. LOUIS
JOB NO. JSL0021
CONTRACT ID.
PROJECT NO.
BRIDGE NO. A9493

DESCRIPTION | DATE

MISSOURI HIGHWAYS AND TRANSPORTATION COMMISSION
105 WEST CAPITOL
JEFFERSON CITY, MO 65102
1-888-ASK-MODOT (1-888-275-6636)

HDR Engineering, Inc.
1001 Highlands Plaza Drive
Suite 200
St. Louis, MO 63110
314-425-8300
Certificate of Authority: 000856

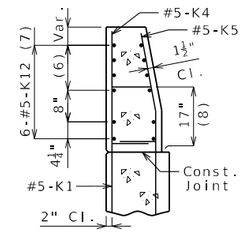

SECTION A-A

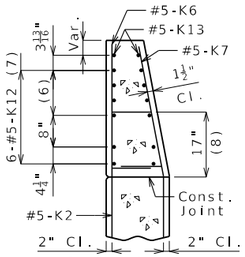

SECTION B-B

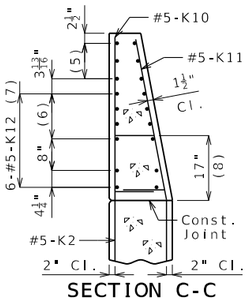

SECTION C-C

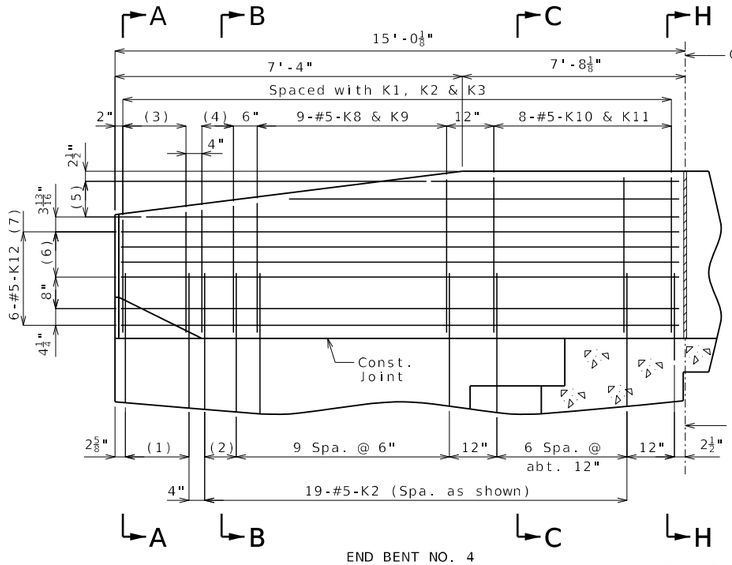

END BENT NO. 4

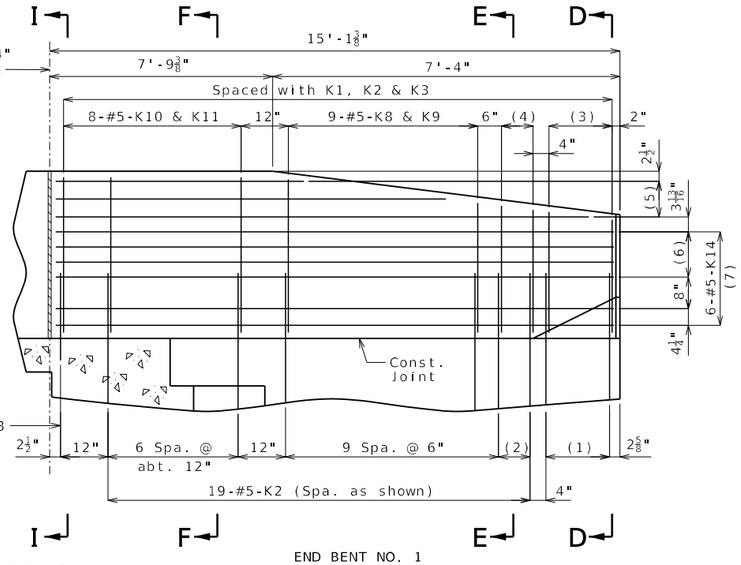

END BENT NO. 1

PART ELEVATION

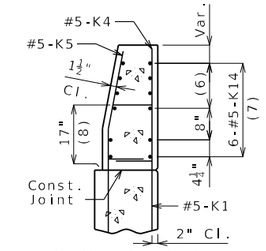

SECTION D-D

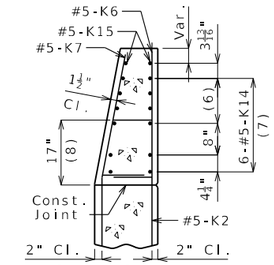

SECTION E-E

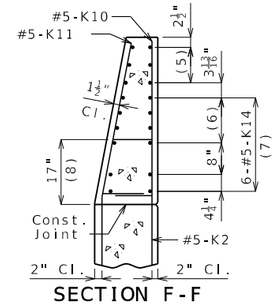

SECTION F-F

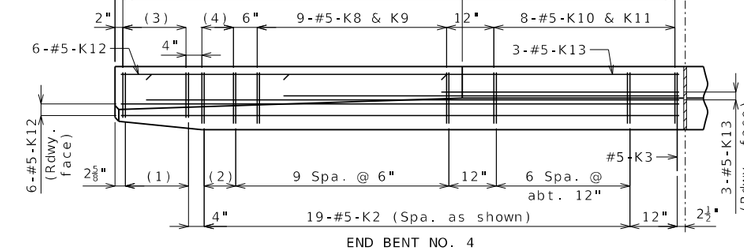

END BENT NO. 4

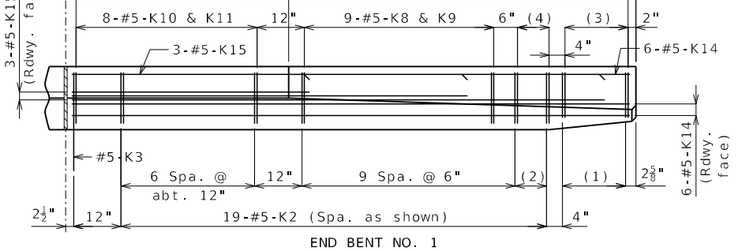

END BENT NO. 1

PART PLAN

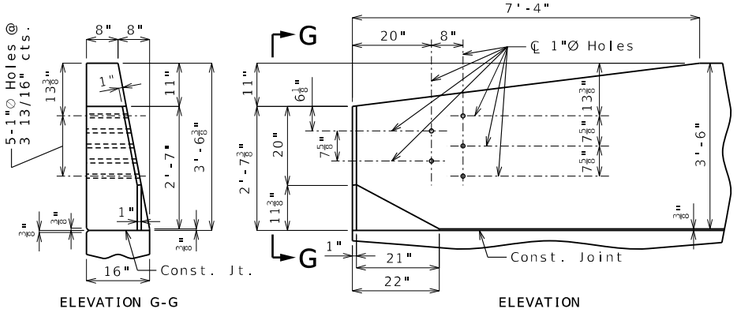

ELEVATION G-G

ELEVATION

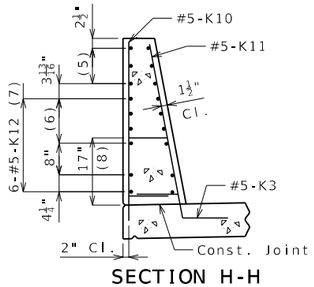

SECTION H-H

(1) 5-#5-K1 @ 4" cts.

(2) 2 spaces @ 4"

(3) 5-#5-K4 & K5

(4) 3-#5-K6 & K7

(5) 3-#5-K13 or K15 @ 4½" cts., each face

(6) 3 spaces @ 3 13/16"

(7) Spaced as shown, each face

(8) To top of bar

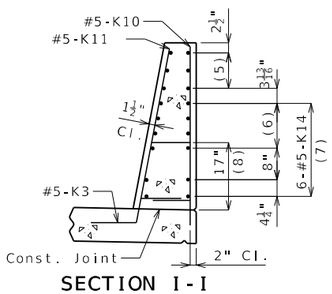

SECTION I-I

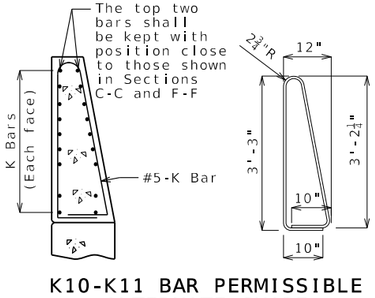

K10-K11 BAR PERMISSIBLE ALTERNATE SHAPE

(Other K bars not shown for clarity)

The K10-K11 bar combination may be furnished as one bar as shown, at the contractor's option.

Notes:

All dimensions are out to out.

For conduit and junction box details, see Sheet No. 37.

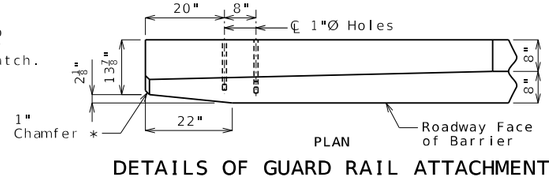

PLAN

DETAILS OF GUARD RAIL ATTACHMENT

* Transition to zero at Type A curb for gutter lines to match.

General Notes:

Concrete traffic barrier delineators shall be placed on top of the barrier as shown on Missouri Standard Plan 617.10 and in accordance with Sec 617. Delineators on bridges with two-lane, two-way traffic shall have retroreflective sheeting on both sides. Concrete traffic barrier delineators will be considered completely covered by the contract unit price for Type D Barrier.

Reinforcing Steel:
Minimum clearance to reinforcing steel shall be 1 1/2" except as shown for bars embedded into end bent.

TYPE D BARRIER AT END BENTS (RIGHT)

(Right Barrier Only)

Detailed September 2025
Checked September 2025

Note: This drawing is not to scale. Follow dimensions.

RYAN DAVID SHAW
NUMBER PE-2011000368
PROFESSIONAL ENGINEER
STATE OF MISSOURI
THIS SHEET HAS BEEN SIGNED, SEALED AND DATED ELECTRONICALLY

DATE PREPARED 4/2/2026

ROUTE	STATE
I-270	MO
DISTRICT	SHEET NO.
BR	35

COUNTY: ST. LOUIS
JOB NO.: JSL0021
CONTRACT ID.:
PROJECT NO.:
BRIDGE NO.: A9493

DESCRIPTION | DATE

MISSOURI HIGHWAYS AND TRANSPORTATION COMMISSION
105 WEST CAPITOL
JEFFERSON CITY, MO 65102
1-888-ASK-MODOT (1-888-275-6636)

HDR Engineering, Inc.
1001 Highlands Plaza Drive
Suite 200
St. Louis, MO 63110
314-425-8300
Certificate of Authority: 000856

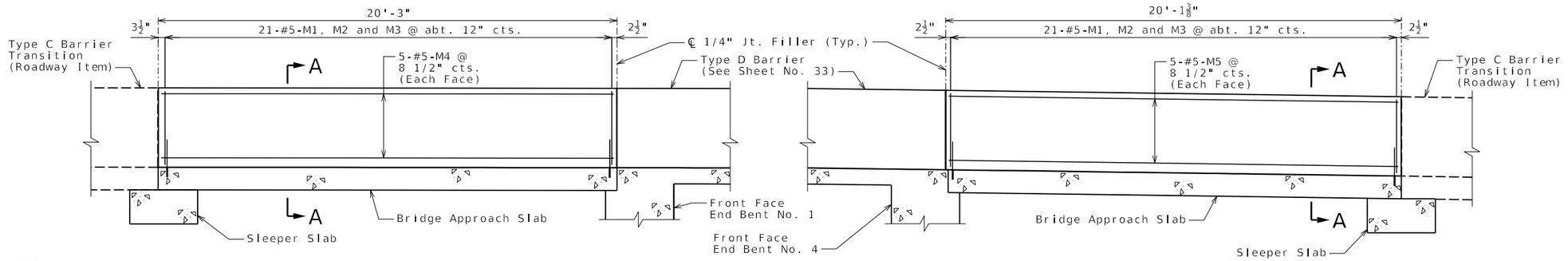

PART ELEVATION OF BARRIER ON APPROACH SLABS

Longitudinal dimensions are horizontal.

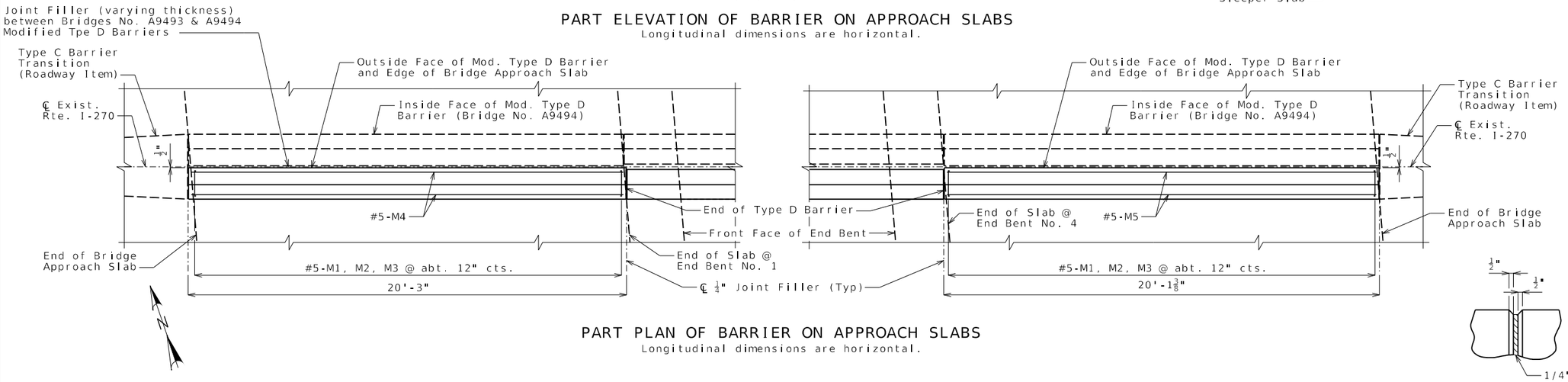

PART PLAN OF BARRIER ON APPROACH SLABS

Longitudinal dimensions are horizontal.

PART ELEVATION AT FORMED JOINT

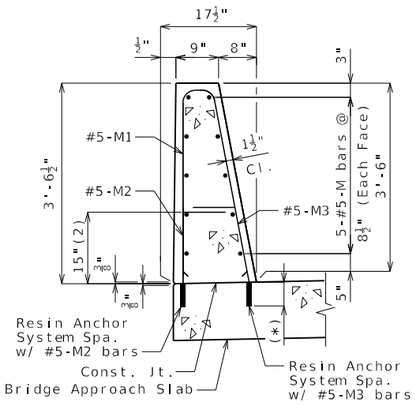

SECTION A-A

The cross-sectional area above the approach slab is 3.89 square feet.

(2) To top bar.

(*) Manufacturer's embedment length (5" minimum)

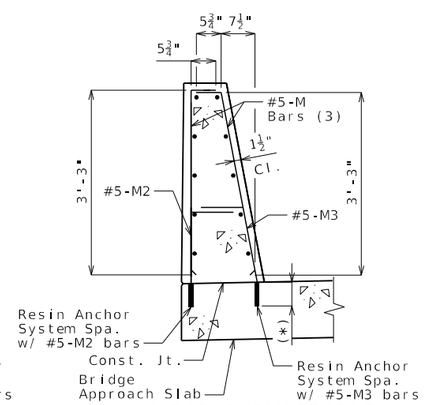

M-BAR PERMISSIBLE ALTERNATE SHAPE

(3) The M1 bar may be separated into two bars as shown, at the contractor's option. (All dimensions are out to out.)

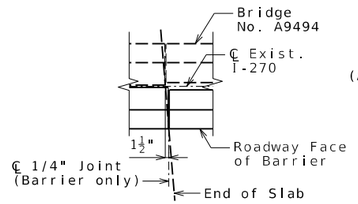

(END BENT NO. 1 SHOWN, END BENT NO, 4 SIMILAR)

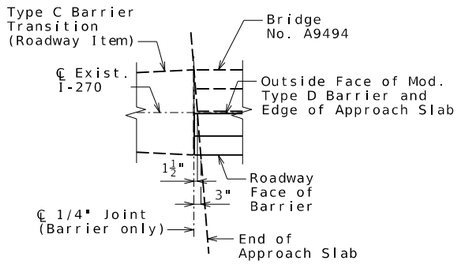

(AT END OF APPROACH SLAB END BENT NO. 1)

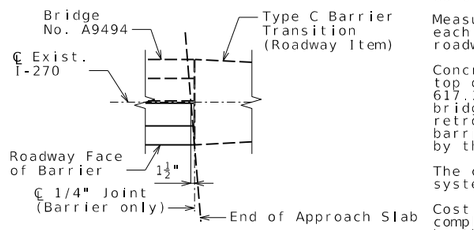

(AT END OF APPROACH SLAB END BENT NO. 4)

PART PLAN SHOWING JOINT LOCATIONS

Notes:

Conventional forming shall be used.

Top of Modified Type D Barrier shall be built parallel to grade with barrier curb joints.

All exposed edges of barrier shall have either a 1/2-inch radius or a 3/8-inch bevel, unless otherwise noted.

Payment for all concrete and reinforcement, complete in place, will be considered completely covered by the contract unit price for Modified Type D Barrier per linear foot.

Concrete in the barrier shall be Class B-1.

Measurement of barrier is to the nearest linear foot for each structure, measured along the top of approach slab at roadway face of barrier as detailed.

Concrete traffic barrier delineators shall be placed on top of the barrier as shown on Missouri Standard Plan 617.10 and in accordance with Sec 617. Delineators on bridges with two-lane, two-way traffic shall have retroreflective sheeting on both sides. Concrete traffic barrier delineators will be considered completely covered by the contract unit price for Modified Type D Barrier.

The contractor shall use one of the qualified resin anchor systems in accordance with Sec 1039.

Cost of furnishing and installing resin anchor systems, complete in place, will be considered completely covered by the contract unit price for Modified Type D Barrier.

The minimum embedment depth in concrete with f'c = 4000 psi for the resin anchor system shall be that required to meet the minimum ultimate pullout strength in accordance with Sec 1039 but shall not be less than 5".

A galvanized #5 Grade 60 reinforcing bar shall be substituted for the 5/8"O threaded rod.

MODIFIED TYPE D BARRIER (LEFT) AT APPROACH SLABS

Detailed September 2025
Checked September 2025

Note: This drawing is not to scale. Follow dimensions.

STATE OF MISSOURI
RYAN DAVID SHAW
NUMBER PE-2017003368
PROFESSIONAL ENGINEER
THIS SHEET HAS BEEN SIGNED, SEALED AND DATED ELECTRONICALLY

DATE PREPARED 4/2/2026

ROUTE	STATE
I-270	MO
DISTRICT	SHEET NO.
BR	36

COUNTY: ST. LOUIS
JOB NO.: JSL0021
CONTRACT ID.:
PROJECT NO.:
BRIDGE NO.: A9493

DESCRIPTION | DATE

MISSOURI HIGHWAYS AND TRANSPORTATION COMMISSION
105 WEST CAPITOL
JEFFERSON CITY, MO 65102
1-888-ASK-MODOT (1-888-275-6636)

HDR Engineering, Inc.
1001 Highlands Plaza Drive
Suite 200
St. Louis, MO 63110
314-425-8300
Certificate of Authority: 000856

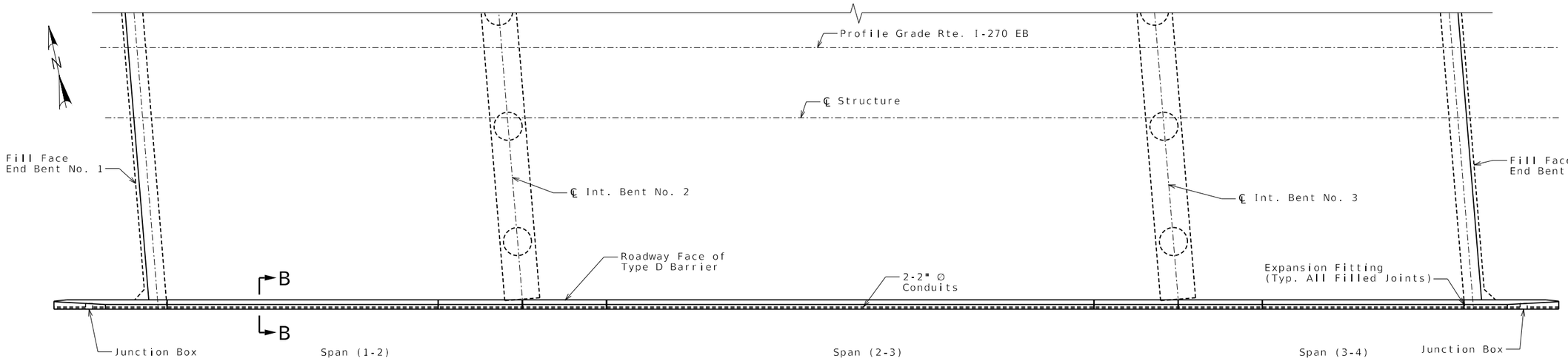

PLAN OF CONDUIT SYSTEM

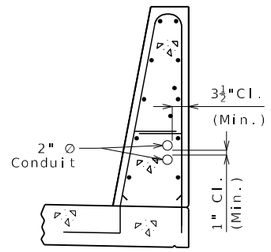

SECTION B-B
(Right barrier)

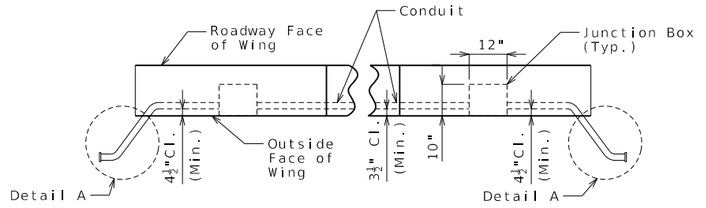

PART PLAN OF BARRIER SHOWING
DELINEATED CONDUIT SYSTEM PLACEMENT
(Single conduit shown, multiple conduits similar.)
(Expansion fitting and deflection coupling not shown for clarity.)

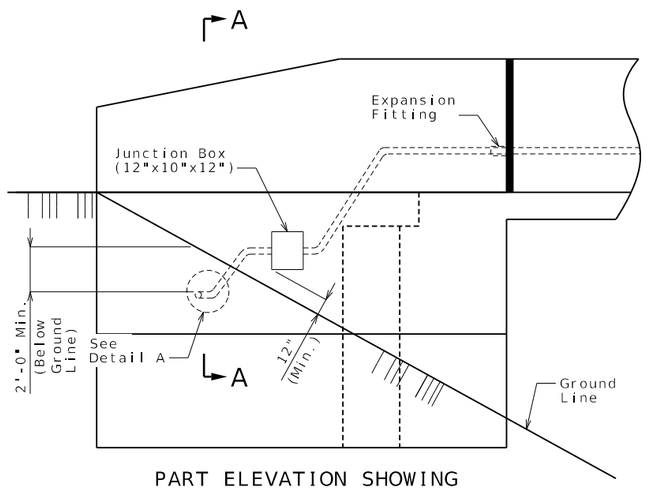

PART ELEVATION SHOWING
JUNCTION BOX IN WING
(Single conduit shown, multiple conduits similar.)

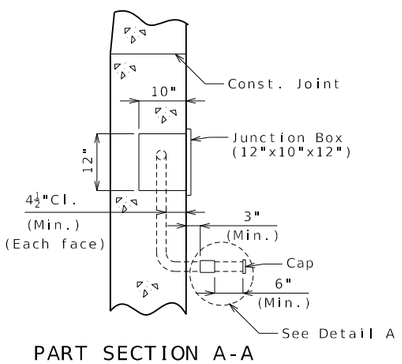

PART SECTION A-A

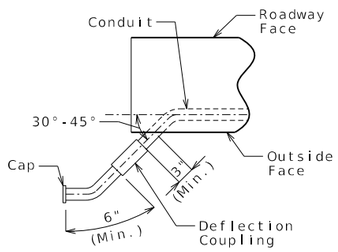

DETAIL A

Notes:

All conduits shall be rigid, nonmetallic, Schedule 40, heavy wall polyvinyl chloride (PVC) with 3 1/2" minimum cover in barrier and 4 1/2" minimum cover in abutment wing. Each section of conduit shall bear the Underwriters Laboratories (UL) label.

Shift reinforcing steel in field where necessary to clear conduit and junction boxes.

Expansion fittings shall be placed as shown and set in accordance with the manufacturer's requirements and based on the air temperature at the time of setting given an estimated total expansion movement of 1 1/2 inch at closed joints using a maximum temperature range of 120°F and a maximum temperature of 110°F.

Minimum clearance between conduits placed in barrier shall be 1".

All junction boxes shall be PVC molded in accordance with Sec 1062 and designed for flush mounting. The conduit terminations shall be permanent or separable. The terminations and covers shall be of watertight construction and shall meet requirements for NEMA 4 or NEMA 4X enclosures.

Drainage shall be provided at low points or other critical locations of all conduits and all junction boxes in accordance with Sec 707. All conduits shall be sloped to drain where possible.

Junction box size shown on plan may require special order. Smaller junction box may be substituted if junction box meets conduit installation, clearance and project requirements.

MoDOT Construction Personnel: Indicate in field and on bridge plans for future work the exact location of buried conduit at ends of bridge that are capped and not immediately used.

Payment for furnishing and installing Conduit System, complete in place, will be considered completely covered by the contract lump sum price for Conduit System on Structure.

CONDUIT SYSTEM DETAILS

Detailed September 2025
Checked September 2025

Note: This drawing is not to scale. Follow dimensions.

STATE OF MISSOURI
RYAN DAVID SHAW
ILLINOIS PE-2017000388
PROFESSIONAL ENGINEER
THIS SHEET HAS BEEN SIGNED, SEALED AND DATED ELECTRONICALLY

DATE PREPARED
4/2/2026

ROUTE	STATE
I-270	MO
DISTRICT	SHEET NO.
BR	37

COUNTY
ST. LOUIS

JOB NO.
JSL0021

CONTRACT ID.

PROJECT NO.

BRIDGE NO.
A9493

DESCRIPTION	DATE

MISSOURI HIGHWAYS AND TRANSPORTATION COMMISSION
105 WEST CAPITOL
JEFFERSON CITY, MO 65102
1-888-ASK-MODOT (1-888-275-6636)

HDR Engineering, Inc.
1001 Highlands Plaza Drive
Suite 200
St. Louis, MO 63110
314-425-8300
Certificate of Authority: 000856

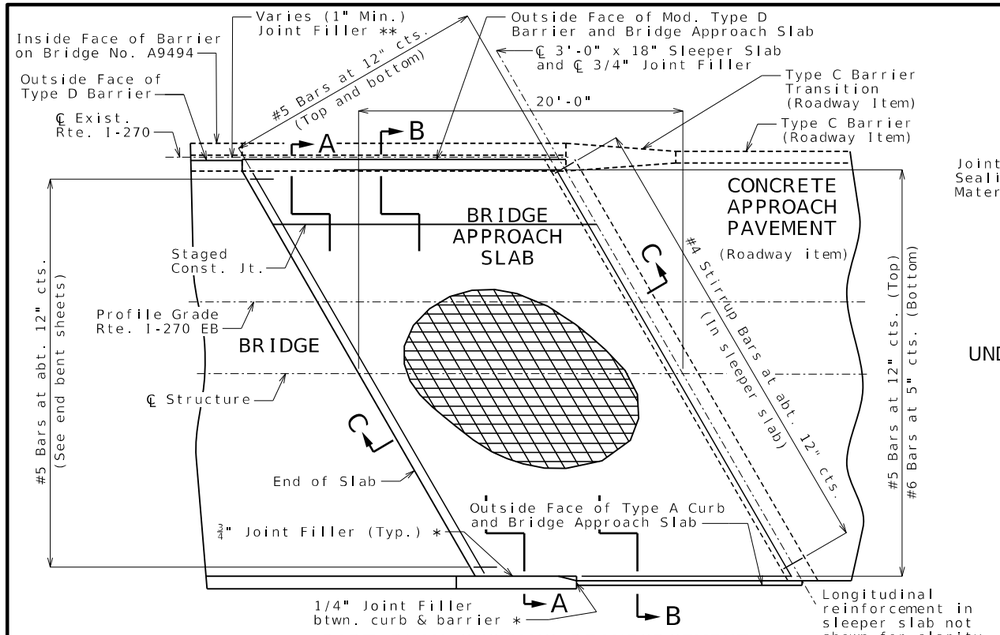

PART PLAN SHOWING REINFORCEMENT

(Approach Slab at End Bent No. 4 shown, Approach Slab at End Bent No. 1 similar)

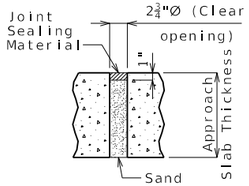

UNDERSEAL ACCESS HOLE DETAIL

(If required)

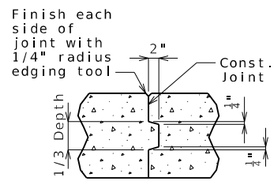

CONSTRUCTION JOINT DETAIL

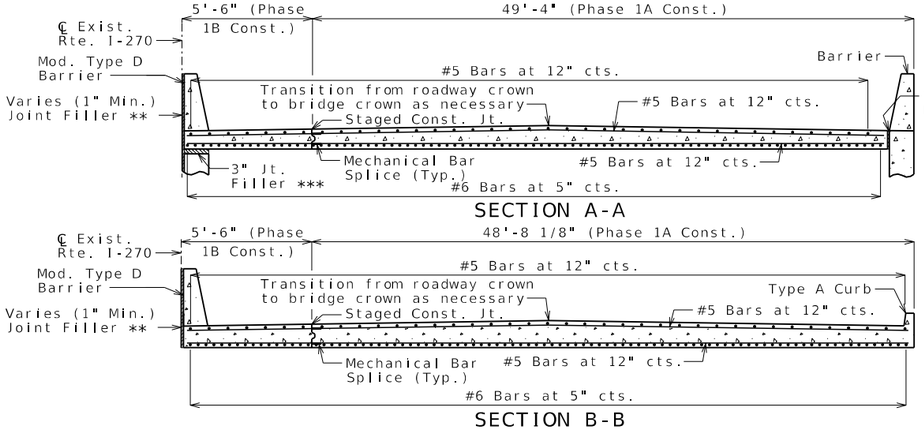

SECTION A-A

SECTION B-B

With the approval of the engineer, the contractor may crown the bottom of the approach slab to match the crown of the roadway surface.

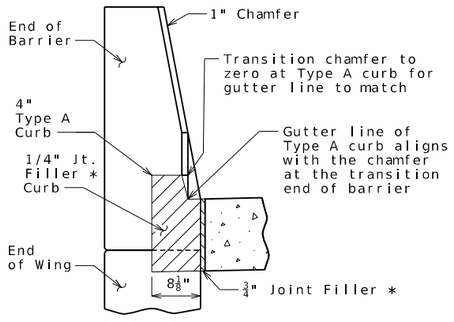

SECTION BETWEEN CURB AND BARRIER

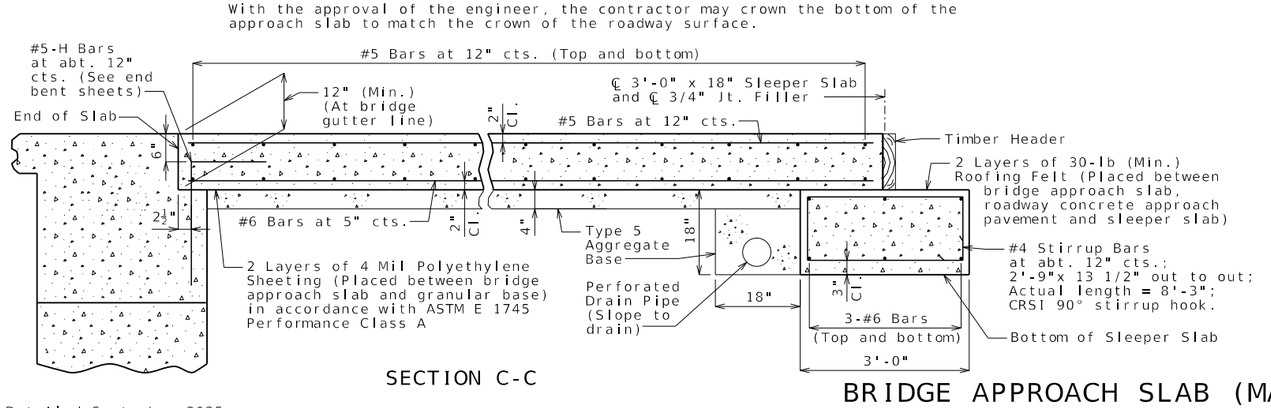

SECTION C-C

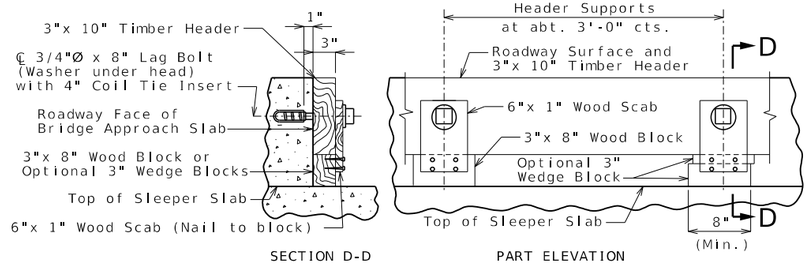

SECTION D-D PART ELEVATION

DETAILS OF TIMBER HEADER

Remove timber header when concrete pavement is placed.

General Notes:

All concrete for the bridge approach slab and sleeper slab shall be in accordance with Sec 503 (f'c = 4,000 psi).

The reinforcing steel in the bridge approach slab and the sleeper slab shall be galvanized Grade 60 with fy = 60,000 psi.

Drain pipe may be either 6" diameter corrugated metallic-coated pipe underdrain, 4" diameter corrugated polyvinyl chloride (PVC) drain pipe, or 4" diameter corrugated polyethylene (PE) drain pipe.

Minimum clearance to reinforcing steel shall be 1 1/2", unless otherwise shown.

The reinforcing steel in the bridge approach slab and the sleeper slab shall be continuous. The transverse reinforcing steel may be made continuous by providing a minimum lap splice of 24 inches for #5 bars and 40 inches for #6 bars, or by mechanical bar splice.

Mechanical bar splices shall be in accordance with Sec 710 (Estimated 48 splices per slab).

All joint filler shall be in accordance with Sec 1057 for preformed fiber expansion joint filler except as noted.

The contractor shall pour and satisfactorily finish the bridge slab before placing the bridge approach slab.

Longitudinal construction joints in approach slab and sleeper slab shall be aligned with longtiudinal construction joints in bridge slab.

For concrete approach pavement details, see roadway plans.

See Missouri Standard Plan 609.00 for details of Type A curb.

Payment for furnishing all materials, labor and excavation necessary to construct the approach slab, including the timber header, sleeper slab, underdrain, Type 5 aggregate base, joint filler and all other appurtenances and incidental work as shown on this sheet, complete in place, will be considered completely covered by the contract unit price for Bridge Approach Slab (Major) per square yard.

* Seal joint between vertical face of approach slab and wing with sealant in accordance with Sec 717 for silicone joint sealant for saw cut and formed joints.

** Seal joint between vertical faces of Mod. Type D Barriers, approach slabs and wings of Bridge No. A9493 and Bridge No. A9494 with sealant in accordance with Sec 717 for silicone joint sealant for saw cut and formed joints.

*** 3" joint filler between top of left wing wall and bottom of approach slab.

STATE OF MISSOURI
RYAN DAVID SHAW
NUMBER PE-2011000388
PROFESSIONAL ENGINEER
THIS SHEET WAS SIGNED, SEALED AND DATED ELECTRONICALLY

DATE PREPARED 4/2/2026

ROUTE	STATE
I-270	MO
DISTRICT	SHEET NO.
BR	38

COUNTY: ST. LOUIS

JOB NO.: JSL0021

CONTRACT ID.:

PROJECT NO.:

BRIDGE NO.: A9493

DATE	DESCRIPTION

MISSOURI HIGHWAYS AND TRANSPORTATION COMMISSION
105 WEST CAPITOL
JEFFERSON CITY, MO 65102
1-888-ASK-MODOT (1-888-275-6636)

HDR Engineering, Inc.
1001 Highlands Plaza Drive
Suite 200
St. Louis, MO 63110
314-425-8300
Certificate of Authority: 000856

Detailed September 2025
Checked September 2025

Note: This drawing is not to scale. Follow dimensions.

Sheet No. 38 of 51

BRIDGE APPROACH SLAB (MAJOR)

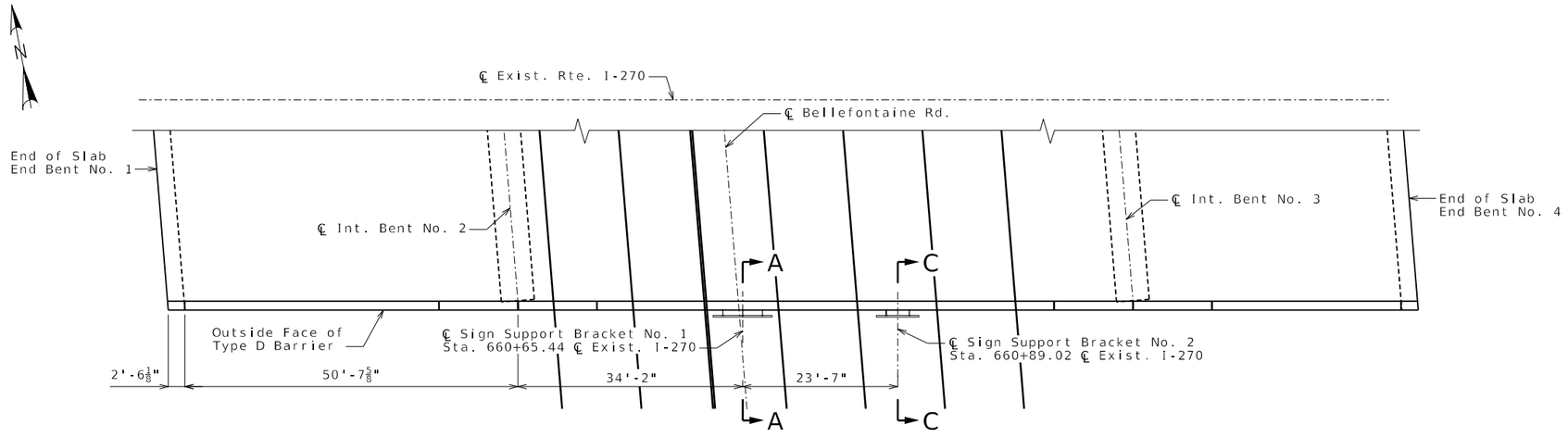

PLAN

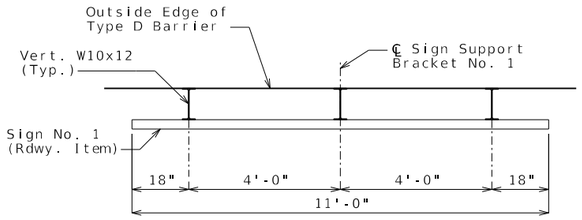

PART PLAN SHOWING SIGN NO. 1

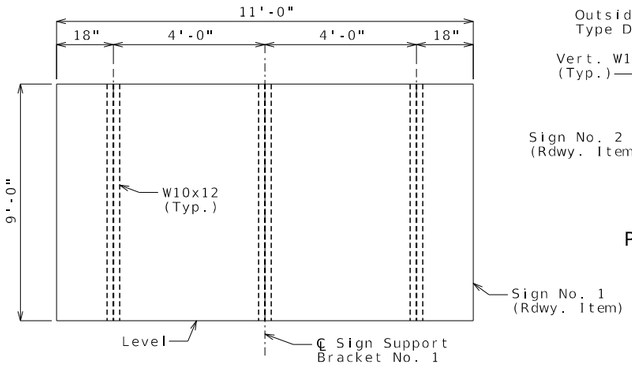

SIGN NO. 1 ELEVATION

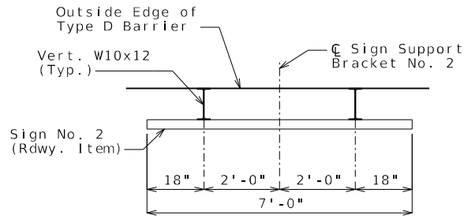

PART PLAN SHOWING SIGN NO. 2

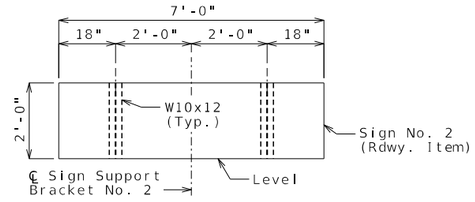

SIGN NO. 2 ELEVATION

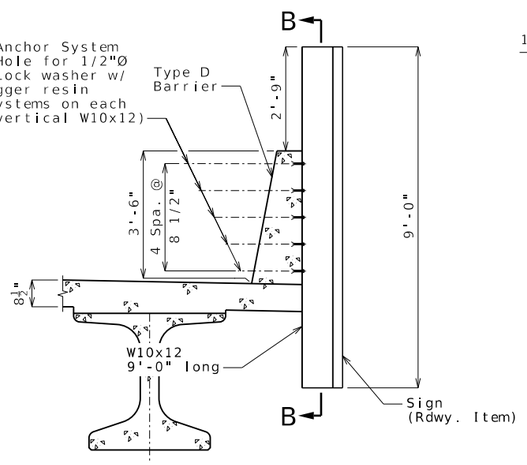

SECTION A-A

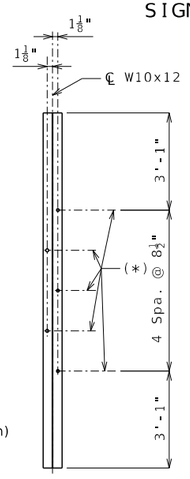

SECTION B-B

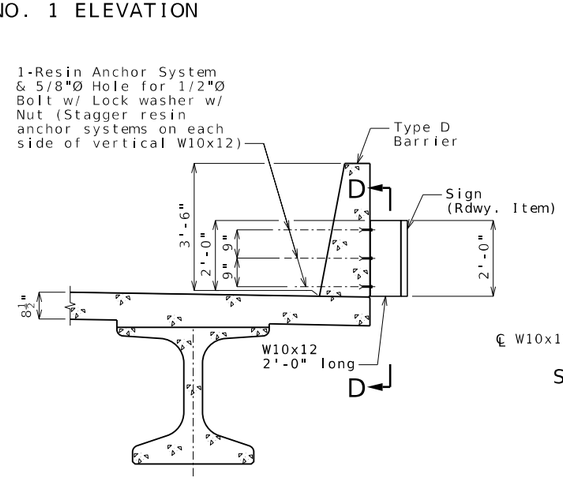

SECTION C-C

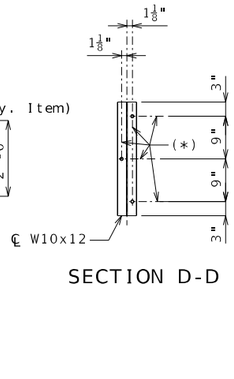

SECTION D-D

SIGN SUPPORT DETAILS

(*) 5/8"∅ Hole for 1/2"∅ Resin Anchor Bolt (Typ.)

Notes:

Minimum clearance on Sign No. 2 should read 15'-11".

Center and level sign on brackets.

All structural steel for sign support shall be ASTM A36 galvanized.

All bolts and washers shall be galvanized.

The cost of furnishing and erecting the sign support brackets, complete in place, shall be paid for by the lump sum price for Fabricated Sign Support Bracket.

Sign attachment to support brackets per sign manufacturer.

All sign dimensions shall be verified by sign manufacturer.

The contractor shall use one of the qualified resin anchor systems in accordance with Sec 1039.

The minimum embedment depth in concrete with f'c = 4000 psi for the resin anchor systems shall be that required to meet the minimum ultimate pullout strength in accordance with Sec 1039 but shall not be less than 5".

Cost of furnishing and installing the resin anchor systems, complete in place, will be considered completely covered by the contract unit price for Fabricated Sign Support Bracket.

Shift sign support bracket to the minimum extent necessary to allow for installation of anchors into structure to clear barrier reinforcing steel and conduits. For conduit details, see Sheet No. 37.

STATE OF MISSOURI
RYAN DAVID SHAW
NUMBER PE-2017000368
PROFESSIONAL ENGINEER
THIS SHEET HAS BEEN SIGNED, SEALED AND DATED ELECTRONICALLY

DATE PREPARED 4/2/2026
ROUTE I-270 | STATE MO
DISTRICT BR | SHEET NO. 39
COUNTY ST. LOUIS
JOB NO. JSL0021
CONTRACT ID.
PROJECT NO.
BRIDGE NO. A9493

DESCRIPTION | DATE

MISSOURI HIGHWAYS AND TRANSPORTATION COMMISSION
105 WEST CAPITOL
JEFFERSON CITY, MO 65102
1-888-ASK-MODOT (1-888-275-6636)
HDR Engineering, Inc.
1001 Highlands Plaza Drive
Suite 200
St. Louis, MO 63110
314-425-8300
Certificate of Authority: 000856

Detailed September 2025
Checked September 2025

Note: This drawing is not to scale. Follow dimensions.

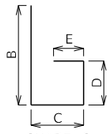

SHAPE 6
or 6S

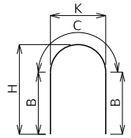

SHAPE 7

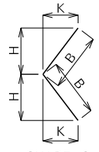

SHAPE 8
or 8S

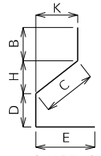

SHAPE 9
or 9S

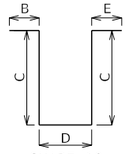

SHAPE 10
or 10S

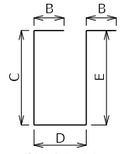

SHAPE 11
or 11S

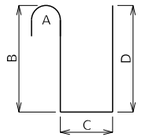

SHAPE 12

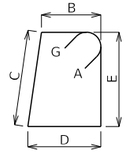

SHAPE 13S

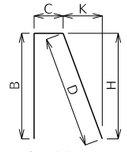

SHAPE 14
or 14S

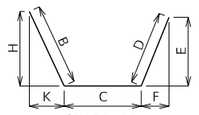

SHAPE 15
or 15S

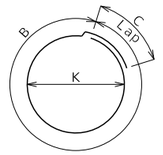

SHAPE 16

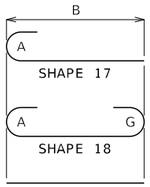

SHAPE 17
SHAPE 18
SHAPE 20

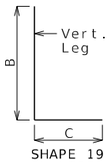

SHAPE 19
or 19S

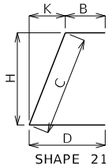

SHAPE 21
or 21S

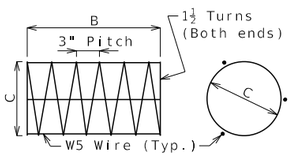

SHAPE 22

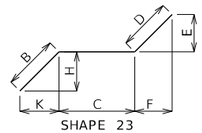

SHAPE 23
or 23S

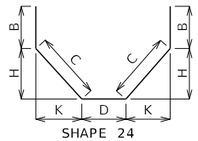

SHAPE 24
or 24S

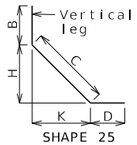

SHAPE 25
or 25S

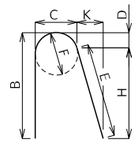

SHAPE 26

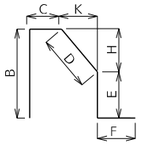

SHAPE 27S

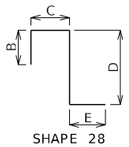

SHAPE 28
or 28S

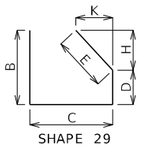

SHAPE 29
or 29S

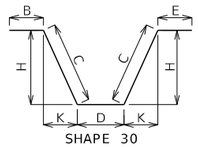

SHAPE 30
or 30S

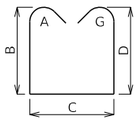

SHAPE 31S

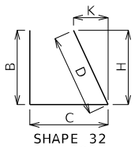

SHAPE 32
or 32S

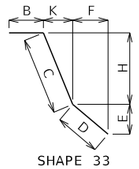

SHAPE 33
or 33S

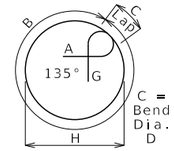

SHAPE 34S

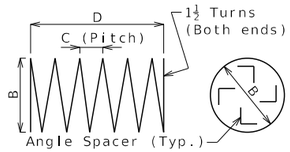

SHAPE 35 (1)

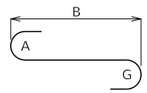

SHAPE 36

Finished Bend Diameters D and Hook Dimensions

Standard Pin Bend Shapes

Size	Case	D	A or G		J
			90°	180°	180°
#4	1	3"	8"	6"	4"
#5	1	3¾"	10"	7"	5"
#6	1	4½"	12"	8¼"	6"
#7	2	5¼"	14"	9⅜"	7"
	3	7"	15"	11½"	8¾"
#8	2	6"	16"	11"	8"
	3	8"	17"	13¼"	10"
#9	1	9½"	19½"	15½"	11¾"
#10	1	10¾"	22"	17½"	13¼"
#11	1	12"	24½"	19½"	14⅞"
#14	1	18¼"	31¼"	27½"	21⅝"
#18	1	24"	41½"	36¼"	28½"

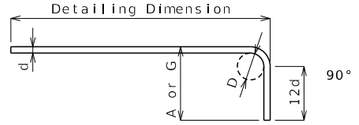

Stirrup Pin Bend Shapes (S)

Size	Case	D	A or G			H	J
			90°	135°	180°	135°	180°
#4	2	2"	4½"	4½"	5"	2⅝"	3"
	3	3"	5"	5¼"	6"	3"	4"
#5	2	2½"	5¾"	5¾"	5¾"	3⅝"	3¾"
	3	3¾"	6¼"	6½"	7"	3⅞"	5"
#6	1	4½"	12"	7¾"	8¼"	4⅝"	6"

Applicable for all grades of steel.

Case 1 applies to all reinforcement. Case 2 applies to all reinforcement except for galvanized bars. Case 3 applies to galvanized bars only.

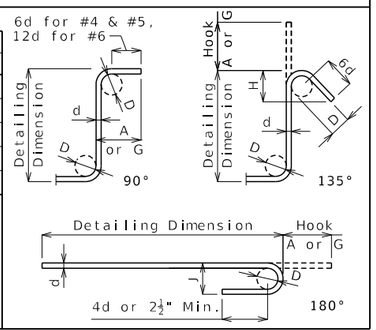

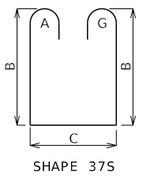

SHAPE 37S

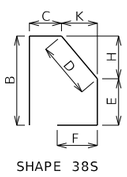

SHAPE 38S

BENDING DIAGRAMS

All dimensions are out to out.

Shapes ending with an S shall be bent in accordance with stirrup pin bend shapes.

Unless otherwise noted, finished bending diameter D is the same for all bends of a shape.

(1) Shall be a deformed or plain spiral bar or wire.

Four angle or channel spacers are required for each column spiral. Spacers are to be placed on inside of spirals. Length and weight of column spirals do not include splices or spacers.

Reinforcing Steel Totals (Pounds)

		Substructure		Superstructure					Entire Bridge	
				Slab		Type D	Mod. Type	Slip		
	Size	Plain	Galv.	Plain	Galv.	Barrier	D Barrier	Form	Plain	Galv.
By Size	W5	0	0	0	0	0	0	0	0	0
	4	0	0	0	1,473	0	0	0	0	1,473
	5	0	20,571	0	45,994	10,307	939	551	0	78,362
	6	0	2,070	0	38,665	0	0	0	0	40,735
	7	0	0	0	3,240	0	0	0	0	3,240
	8	0	2,764	0	17,732	0	0	0	0	20,496
	9	0	0	0	0	0	0	0	0	0
	10	0	0	0	0	0	0	0	0	0
	11	0	62,448	0	0	0	0	0	0	62,448
	14	0	0	0	0	0	0	0	0	0
	18	0	0	0	0	0	0	0	0	0
By Type		0	87,853	0	107,104	10,307	939	551	0	206,754

All reinforcing steel shall be galvanized unless otherwise specified.

Products used to repair damaged zinc coating shall not contain aluminum.

Reinforcing steel (ASTM A706 Grade 60) fy = 60,000 psi.

BENDING DIAGRAMS AND REINFORCING STEEL TOTALS

Detailed September 2025
Checked September 2025

Note: This drawing is not to scale. Follow dimensions.

STATE OF MISSOURI
RYAN DAVID SHAW
ILLINOIS PE-2017000368
PROFESSIONAL ENGINEER
THIS SHEET WAS SIGNED, SEALED AND DATED ELECTRONICALLY

DATE PREPARED 4/2/2026
ROUTE I-270 | STATE MO
DISTRICT BR | SHEET NO. 40
COUNTY ST. LOUIS
JOB NO. JSL0021
CONTRACT ID.
PROJECT NO.
BRIDGE NO. A9493

DESCRIPTION | DATE

MISSOURI HIGHWAYS AND TRANSPORTATION COMMISSION
105 WEST CAPITOL
JEFFERSON CITY, MO 65102
1-888-ASK-MODOT (1-888-275-6636)

HDR Engineering, Inc.
1001 Highlands Plaza Drive
Suite 200
St. Louis, MO 63110
314-425-8300
Certificate of Authority: 000856

Bill of Reinforcing Steel

No. Req.	Size/ Mark	Location	Codes C	SH	V	Dimensions B ft in.	C ft in.	D ft in.	E ft in.	F ft in.	H ft in.	K ft in.	Nom. Length ft in.	Actual Length ft in.	Weight lb
		Substructure													
		Intermediate Bent No. 2													
10	8 H200	BEAM	G	20		51 9.00							51 9	51 9	1,382
10	6 H201	BEAM	G	20		51 9.00							51 9	51 9	777
10	11 H202	BEAM	G	18		51 9.00							55 0	55 0	2,922
10	11 H203	BEAM	G	20		32 10.00							32 10	32 10	1,744
31	5 U200	BEAM	G	13S		4 9.00	4 9.00	4 9.00	4 9.00				20 1	19 8	636
7	5 U201	BEAM	G	10S			4 9.00	4 9.00					14 3	14 0	102
52	5 U202	BEAM	G	13S		4 9.00	5 1.50	4 9.00	5 1.50				20 10	20 6	1,111
14	5 U203	BEAM	G	10S			5 1.50	4 9.00					15 0	14 9	215
15	6 U204	BEAM	G	10S			12.00	4 9.00					6 9	6 5	145
24	11 V200	DRILLED SHAFT	G	20		60 0.00							60 0	60 0	7,651
21	11 V201	DRILLED SHAFT	G	20		50 11.00							50 11	50 11	5,681
24	11 V202	DRILLED SHAFT	G	17		49 4.00							50 11	50 11	6,492
21	11 V203	DRILLED SHAFT	G	17		58 5.00							60 0	60 0	6,694
3	5 P200	DRILLED SHAFT	G	35		3 6.00	6.00	81 3.00					1819 9	1792 8	5,609
3	5 P201	DRILLED SHAFT	G	35		3 6.00	4.00	18 9.00					651 6	641 10	2,008
45	5 P202	BEAM	G	34S		11 0.00	3.75				3 6.00		12 6	12 6	586
30	6 D200	BEAM	G	20		2 6.00							2 6	2 6	113
		Intermediate Bent No. 3													
10	8 H300	BEAM	G	20		51 9.00							51 9	51 9	1,382
10	6 H301	BEAM	G	20		51 9.00							51 9	51 9	777
10	11 H302	BEAM	G	18		51 9.00							55 0	55 0	2,922
10	11 H303	BEAM	G	20		32 10.00							32 10	32 10	1,744
31	5 U300	BEAM	G	13S		4 9.00	4 9.00	4 9.00	4 9.00				20 1	19 8	636
7	5 U301	BEAM	G	10S			4 9.00	4 9.00					14 3	14 0	102
52	5 U302	BEAM	G	13S		4 9.00	5 1.75	4 9.00	5 1.75				20 11	20 6	1,112
14	5 U303	BEAM	G	10S			5 1.75	4 9.00					15 1	14 10	217
15	6 U304	BEAM	G	10S			12.00	4 9.00					6 9	6 5	145
24	11 V300	DRILLED SHAFT	G	20		60 0.00							60 0	60 0	7,651
21	11 V301	DRILLED SHAFT	G	20		51 3.00							51 3	51 3	5,718
24	11 V302	DRILLED SHAFT	G	17		49 8.00							51 3	51 3	6,535
21	11 V303	DRILLED SHAFT	G	17		58 5.00							60 0	60 0	6,694
3	5 P300	DRILLED SHAFT	G	35		3 6.00	6.00	81 3.00					1819 9	1792 8	5,609
3	5 P301	DRILLED SHAFT	G	35		3 6.00	4.00	19 1.00					662 6	652 7	2,042
45	5 P302	BEAM	G	34S		11 0.00	3.75				3 6.00		12 6	12 6	586
30	6 D300	BEAM	G	20		2 6.00							2 6	2 6	113
		Superstructure													
		End Bent No. 1													
8	7 H100	BEAM	G	20		54 8.00							54 8	54 8	894
4	6 H101	BEAM	G	20		54 8.00							54 8	54 8	328
4	7 H102	BEAM	G	20		34 2.00							34 2	34 2	279
4	7 H103	BEAM	G	20		54 8.00							54 8	54 8	447
2	6 H104	DIAPHRAGM	G	20		2 2.00							2 2	2 2	7
6	6 H105	DIAPHRAGM	G	20		3 6.00							3 6	3 6	32
2	6 H106	DIAPHRAGM	G	20		2 9.00							2 9	2 9	8
5	6 H107	DIAPHRAGM	G	20		5 10.00							5 10	5 10	44
15	6 H108	DIAPHRAGM	G	20		8 7.00							8 7	8 7	193
5	6 H109	DIAPHRAGM	G	20		7 1.00							7 1	7 1	53
5	6 H110	DIAPHRAGM	G	20		54 8.00							54 8	54 8	411
11	8 H111	WING	G	20		13 1.00							13 1	13 1	384
11	8 H112	WING	G	6		13 1.00	17.00						14 6	14 3	419
11	8 H113	WING	G	20		13 1.00							13 1	13 1	384
11	8 H114	WING	G	6		13 1.00	17.00						14 6	14 3	419
4	8 H115	WING	G	20		14 6.00							14 6	14 6	155
4	8 H116	WING	G	6		14 6.00	17.00						15 11	15 8	167
4	8 H117	WING	G	20		14 6.00							14 6	14 6	155
4	8 H118	WING	G	6		14 6.00	17.00						15 11	15 8	167
6	5 H119	STRAND TIE	G	20		5 9.00							5 9	5 9	36
52	5 H120	APP. NOTCH	G	19		2 0.00	15.00						3 3	3 1	167
11	5 U100	BEAM	G	10S			5 11.25	2 9.00					14 7	14 5	165

Bill of Reinforcing Steel

No. Req.	Size/ Mark	Location	Codes C	SH	V	Dimensions B ft in.	C ft in.	D ft in.	E ft in.	F ft in.	H ft in.	K ft in.	Nom. Length ft in.	Actual Length ft in.	Weight lb
		Superstructure (cont.)													
		End Bent No. 1 (cont.)													
14	4 U101	BEAM	G	13S		2 9.00	2 8.00	2 9.00	2 8.00				11 8	11 4	106
15	5 U102	BEAM	G	10S			6 3.75	2 9.00					15 5	15 2	237
26	4 U103	BEAM	G	13S		2 9.00	3 0.25	2 9.00	3 0.25				12 5	12 1	210
1	4 U104	BEAM	G	10S			3 0.25	2 9.00					8 10	8 7	6
36	5 U105	DIAPHRAGM	G	10S			3 9.25	2 3.00					9 10	9 7	360
36	6 U106	DIAPHRAGM	G	19S		3 1.75	2 9.00						5 11	5 9	311
70	6 U107	DIAPHRAGM	G	19S		2 8.50	4 2.75						6 11	6 9	710
20	5 V100	BEAM	G	20		6 4.00							6 4	6 4	132
41	6 V101	DIAPHRAGM	G	20		3 1.00							3 1	3 1	190
26	6 V102	WING	G	20		7 1.00							7 1	7 1	277
26	6 V103	WING	G	20		6 3.00							6 3	6 3	244
10	6 F100	BRACE	G	23		20.00	4 7.50	20.00	14.50	13.50	14.50	13.50	8 0	7 11	119
4	6 F101	DIAPHRAGM	G	21		5 6.75	2 9.00				2 9.00	2.50	8 4	8 2	49
10	6 F102	BRACE	G	23		20.00	5 1.75	20.00	13.50	14.50	13.50	14.50	8 6	8 5	126
3	6 F103	DIAPHRAGM	G	21		5 10.00	2 9.00				2 9.00	2.50	8 7	8 5	38
		Intermediate Bent No. 2 Diaphragm													
10	6 H250	DIAPHRAGM	G	20		5 10.00							5 10	5 10	88
30	4 H251	DIAPHRAGM	G	20		8 7.00							8 7	8 7	172
10	6 H252	DIAPHRAGM	G	20		5 1.00							5 1	5 1	76
4	5 H253	STRAND TIE	G	20		4 6.00							4 6	4 6	19
8	5 H254	STRAND TIE	G	20		5 9.00							5 9	5 9	48
8	6 U250	DIAPHRAGM	G	28S			22.00	3 3.75	22.00				7 0	6 8	80
20	6 U251	DIAPHRAGM	G	28S			2 3.00	3 3.75	22.00				7 5	7 1	213
20	6 U252	DIAPHRAGM	G	28S			2 3.00	3 11.50	22.00				8 1	7 9	233
50	4 U253	DIAPHRAGM	G	28S			2 3.00	3 11.25	15.00				7 5	7 3	242
16	5 U254	DIAPHRAGM	G	6		4 5.00	11.00	17.25					6 9	6 6	108
4	5 U255	DIAPHRAGM	G	6		4 5.00	11.00						5 4	5 2	22
8	5 V250	DIAPHRAGM	G	20		4 0.00							4 0	4 0	33
		Intermediate Bent No. 3 Diaphragm													
10	6 H350	DIAPHRAGM	G	20		5 10.00							5 10	5 10	88
30	4 H351	DIAPHRAGM	G	20		8 7.00							8 7	8 7	172
10	6 H352	DIAPHRAGM	G	20		5 1.00							5 1	5 1	76
4	5 H353	STRAND TIE	G	20		4 6.00							4 6	4 6	19
8	5 H354	STRAND TIE	G	20		5 9.00							5 9	5 9	48
8	6 U350	DIAPHRAGM	G	28S			22.00	3 3.75	22.00				7 0	6 8	80
20	6 U351	DIAPHRAGM	G	28S			2 3.00	3 3.75	22.00				7 5	7 1	213
20	6 U352	DIAPHRAGM	G	28S			2 3.00	3 11.50	22.00				8 1	7 9	233
50	4 U353	DIAPHRAGM	G	28S			2 3.00	3 11.25	15.00				7 5	7 3	242
16	5 U354	DIAPHRAGM	G	6		4 5.00	11.00	17.25					6 9	6 6	108
4	5 U355	DIAPHRAGM	G	6		4 5.00	11.00						5 4	5 2	22
8	5 V350	DIAPHRAGM	G	20		4 0.00							4 0	4 0	33
		End Bent No. 4													
8	7 H400	BEAM	G	20		54 8.00							54 8	54 8	894
4	6 H401	BEAM	G	20		54 8.00							54 8	54 8	328
4	7 H402	BEAM	G	20		34 2.00							34 2	34 2	279
4	7 H403	BEAM	G	20		54 8.00							54 8	54 8	447
2	6 H404	DIAPHRAGM	G	20		2 2.00							2 2	2 2	7
6	6 H405	DIAPHRAGM	G	20		3 6.00							3 6	3 6	32
2	6 H406	DIAPHRAGM	G	20		2 9.00							2 9	2 9	8
5	6 H407	DIAPHRAGM	G	20		5 10.00							5 10	5 10	44
15	6 H408	DIAPHRAGM	G	20		8 7.00							8 7	8 7	193
5	6 H409	DIAPHRAGM	G	20		7 1.00							7 1	7 1	53
5	6 H410	DIAPHRAGM	G	20		54 8.00							54 8	54 8	411
11	8 H411	WING	G	20		13 1.00							13 1	13 1	384
11	8 H412	WING	G	6		13 1.00	17.00						14 6	14 3	419
11	8 H413	WING	G	20		13 1.00							13 1	13 1	384
11	8 H414	WING	G	6		13 1.00	17.00						14 6	14 3	419
4	8 H415	WING	G	20		14 6.00							14 6	14 6	155
4	8 H416	WING	G	6		14 6.00	17.00						15 11	15 8	167
4	8 H417	WING	G	20		14 6.00							14 6	14 6	155
4	8 H418	WING	G	6		14 6.00	17.00						15 11	15 8	167
6	5 H419	STRAND TIE	G	20		5 9.00							5 9	5 9	36

Nominal lengths are based on out to out dimensions shown in bending diagrams and are listed to the nearest inch for fabricator's use. Actual lengths are measured along centerline bar to the nearest inch. Weights are based on actual lengths.

For bending diagrams and steel reinforcing totals, see Sheet No. 40.

Reinforcing steel (ASTM A706 Grade 60) fy = 60,000 psi.

Codes: C = Required coatings, where E = Epoxy Coated and G = Galvanized.

SH = Required shape, see bending diagrams.

V = Sets of varied bars and number of bars of each length. Bar dimensions vary in equal increments between dimensions shown on this line and the following line and the actual length dimension shown on this line and the following line vary by the specified increment.

Detailed September 2025
Checked September 2025

BILL OF REINFORCING STEEL

Note: This drawing is not to scale. Follow dimensions.

RYAN DAVID SHAW
ILLINOIS
PE-2017000388
PROFESSIONAL ENGINEER
STATE OF MISSOURI
THIS SHEET HAS BEEN SIGNED, SEALED AND DATED ELECTRONICALLY

DATE PREPARED 4/2/2026

ROUTE I-270 | STATE MO

DISTRICT BR | SHEET NO. 41

COUNTY ST. LOUIS

JOB NO. JSL0021

CONTRACT ID.

PROJECT NO.

BRIDGE NO. A9493

DESCRIPTION | DATE

MISSOURI HIGHWAYS AND TRANSPORTATION COMMISSION
105 WEST CAPITOL
JEFFERSON CITY, MO 65102
1-888-ASK-MODOT (1-888-275-6636)

HDR Engineering, Inc.
1001 Highlands Plaza Drive
Suite 200
St. Louis, MO 63110
314-425-8300
Certificate of Authority: 000856

Bill of Reinforcing Steel

No. Req.	Size/ Mark	Location	Codes C	SH	V	Dimensions B	C	D	E	F	H	K	Nom. Length	Actual Length	Weight
						ft in.	ft in.	ft in.	ft in.	ft in.	ft in.	ft in.	ft in.	ft in.	lb
		Superstructure (cont.)													
		End Bent No. 4 (cont.)													
52	5 H420	APP. NOTCH	G	19		2 0.00	15.00						3 3	3 1	167
11	5 U400	BEAM	G	10S			5 11.25	2 9.00					14 8	14 5	165
14	4 U401	BEAM	G	13S		2 9.00	2 8.00	2 9.00	2 8.00				11 8	11 4	106
15	5 U402	BEAM	G	10S			6 4.25	2 9.00					15 5	15 3	238
26	4 U403	BEAM	G	13S		2 9.00	3 0.50	2 9.00	3 0.50				12 5	12 2	211
1	4 U404	BEAM	G	10S			3 0.50	2 9.00					8 10	8 8	6
36	5 U405	DIAPHRAGM	G	10S			3 9.00	2 3.00					9 9	9 7	358
36	6 U406	DIAPHRAGM	G	19S		3 1.50	2 9.00						5 11	5 9	311
70	6 U407	DIAPHRAGM	G	19S		2 8.50	4 2.75						6 11	6 9	710
20	5 V400	BEAM	G	20		6 5.00							6 5	6 5	134
41	6 V401	DIAPHRAGM	G	20		3 1.00							3 1	3 1	190
26	6 V402	WING	G	20		6 11.00							6 11	6 11	270
26	6 V403	WING	G	20		6 2.00							6 2	6 2	241
10	6 F400	BRACE	G	23		20.00	5 0.75	20.00	13.50	14.50	13.50	14.50	8 5	8 4	125
4	6 F401	DIAPHRAGM	G	21		5 9.00	2 9.00				2 9.00	2.50	8 6	8 4	50
10	6 F402	BRACE	G	23		20.00	4 8.75	20.00	14.50	13.50	14.50	13.50	8 1	8 0	120
3	6 F403	DIAPHRAGM	G	21		5 7.75	2 9.00				2 9.00	2.50	8 5	8 3	37
		Slab													
260	5 S1	SLAB	G	20		48 9.00							48 9	48 9	13,220
16	5 S2	SLAB	G	20	2	50 1.00							50 1	50 1	
		(INCR. = 6'-1 3/8")				7 3.00							7 3	7 3	478
361	5 S3	SLAB	G	20		54 5.00							54 5	54 5	20,489
180	5 S4	SLAB	G	20		48 9.00							48 9	48 9	9,152
84	8 S5	SLAB	G	20		22 0.00							22 0	22 0	4,934
84	8 S6	SLAB	G	20		37 0.00							37 0	37 0	8,298
16	6 S7	SLAB	G	20	2	50 2.00							50 2	50 2	
		(INCR. = 6'-1 1/4")				7 5.00							7 5	7 5	692
371	6 S8	SLAB	G	20		54 5.00							54 5	54 5	30,323
		Barriers													
		Type D													
10	5 K1	BARRIER	G	27S		3 5.00	9.25	5.25	2 11.75		5.25	1.00	7 7	7 4	76
38	5 K2	BARRIER	G	27S		3 5.00	9.25	14.50	2 2.75		14.25	2.75	7 8	7 5	294
2	5 K3	BARRIER	G	27S		22.50	9.25	14.50	7.75	12.00	14.25	2.75	5 6	5 2	11
10	5 K4	BARRIER	G	19S	2	2 6.25	10.00						3 4	3 3	
		(INCR. = 1/2")				2 4.25	10.00						3 2	3 1	33
10	5 K5	BARRIER	G	38S	2			18.50	9.50	8.25	18.00	4.00	3 0	2 10	
		(INCR. = 1/2")						20.50	9.50	8.25	20.00	4.50	3 2	3 0	30
6	5 K6	BARRIER	G	19S		2 6.75	10.00						3 5	3 4	21
6	5 K7	BARRIER	G	21S			2 6.50	10.00			2 6.00	6.25	3 5	3 3	20
18	5 K8	BARRIER	G	19S	2	2 8.50	10.00						3 7	3 6	
		(INCR. = 3/4")				3 2.50	10.00						4 1	4 0	69
18	5 K9	BARRIER	G	21S	2		2 8.50	10.00			2 7.75	6.75	3 7	3 5	
		(INCR. = 3/4")					3 2.50	10.00			3 1.75	7.75	4 1	3 11	68
16	5 K10	BARRIER	G	19S		3 3.00	10.00						4 1	4 0	67
16	5 K11	BARRIER	G	21S			3 3.00	10.00			3 2.25	7.75	4 1	3 11	65
12	5 K12	BARRIER	G	20		14 9.00							14 9	14 9	185
6	5 K13	BARRIER	G	20	2	8 0.00							8 0	8 0	
		(INCR. = 3'-0")				14 0.00							14 0	14 0	69
12	5 K14	BARRIER	G	20		14 10.00							14 10	14 10	186
6	5 K15	BARRIER	G	20	2	8 1.00							8 1	8 1	
		(INCR. = 3'-0")				14 1.00							14 1	14 1	69
390	5 R1	BARRIER	G	26S		3 3.00	5.50	2.25	3 1.25	5.50	3 0.75	6.75	6 10	6 10	2,780
390	5 R2	BARRIER	G	19S		20.50	9.50						2 6	2 5	983
390	5 R3	BARRIER	G	27S			9.50	15.25	5.00	12.00	15.00	3.00	3 6	3 4	1,356
80	5 R4	BARRIER	G	20		11 9.00							11 9	11 9	980
10	5 R5	BARRIER	G	20		41 0.00							41 0	41 0	428
40	5 R6	BARRIER	G	20		35 11.00							35 11	35 11	1,498
10	5 R7	BARRIER	G	20		30 10.00							30 10	30 10	322
10	5 R8	BARRIER	G	20		38 4.00							38 4	38 4	400
10	5 R9	BARRIER	G	20		28 6.00							28 6	28 6	297
		Modified Type D													
42	5 M1	MODIFIED BARRIER	G	26S		3 3.00	6.50	2.25	3 1.25	6.50	3 0.75	6.75	6 11	6 11	303
42	5 M2	MODIFIED BARRIER	G	19S		20.50	10.50						2 7	2 6	110
42	5 M3	MODIFIED BARRIER	G	27S			10.50	15.25	5.00		15.00	3.00	2 7	2 6	110

Bill of Reinforcing Steel

No. Req.	Size/ Mark	Location	Codes C	SH	V	Dimensions B	C	D	E	F	H	K	Nom. Length	Actual Length	Weight
						ft in.	ft in.	ft in.	ft in.	ft in.	ft in.	ft in.	ft in.	ft in.	lb
		Superstructure (cont.)													
		Modified Type D (cont.)													
10	5 M4	MODIFIED BARRIER	G	20		20 0.00							20 0	20 0	209
10	5 M5	MODIFIED BARRIER	G	20		19 10.00							19 10	19 10	207
		Slip Form													
44	5 C1	SLIP FORM	G	20		12 0.00							12 0	12 0	551

Nominal lengths are based on out to out dimensions shown in bending diagrams and are listed to the nearest inch for fabricator's use. Actual lengths are measured along centerline bar to the nearest inch. Weights are based on actual lengths.

For bending diagrams and steel reinforcing totals, see Sheet No. 40.

Detailed September 2025
Checked September 2025

Reinforcing steel (ASTM A706 Grade 60) fy = 60,000 psi.

Codes: C = Required coatings, where E = Epoxy Coated and G = Galvanized.
SH = Required shape, see bending diagrams.
V = Sets of varied bars and number of bars of each length. Bar dimensions vary in equal increments between dimensions shown on this line and the following line and the actual length dimension shown on this line and the following line vary by the specified increment.

BILL OF REINFORCING STEEL

Note: This drawing is not to scale. Follow dimensions.

STATE OF MISSOURI
RYAN DAVID SHAW
NUMBER PE-2017000368
PROFESSIONAL ENGINEER
THIS SHEET HAS BEEN SIGNED, SEALED AND DATED ELECTRONICALLY

DATE PREPARED 4/2/2026
ROUTE I-270 | STATE MO
DISTRICT BR | SHEET NO. 42
COUNTY ST. LOUIS
JOB NO. JSL0021
CONTRACT ID.
PROJECT NO.
BRIDGE NO. A9493

DESCRIPTION | DATE

MISSOURI HIGHWAYS AND TRANSPORTATION COMMISSION
105 WEST CAPITOL
JEFFERSON CITY, MO 65102
1-888-ASK-MODOT (1-888-275-6636)

HDR Engineering, Inc.
1001 Highlands Plaza Drive
Suite 200
St. Louis, MO 63110
314-425-8300
Certificate of Authority: 000856

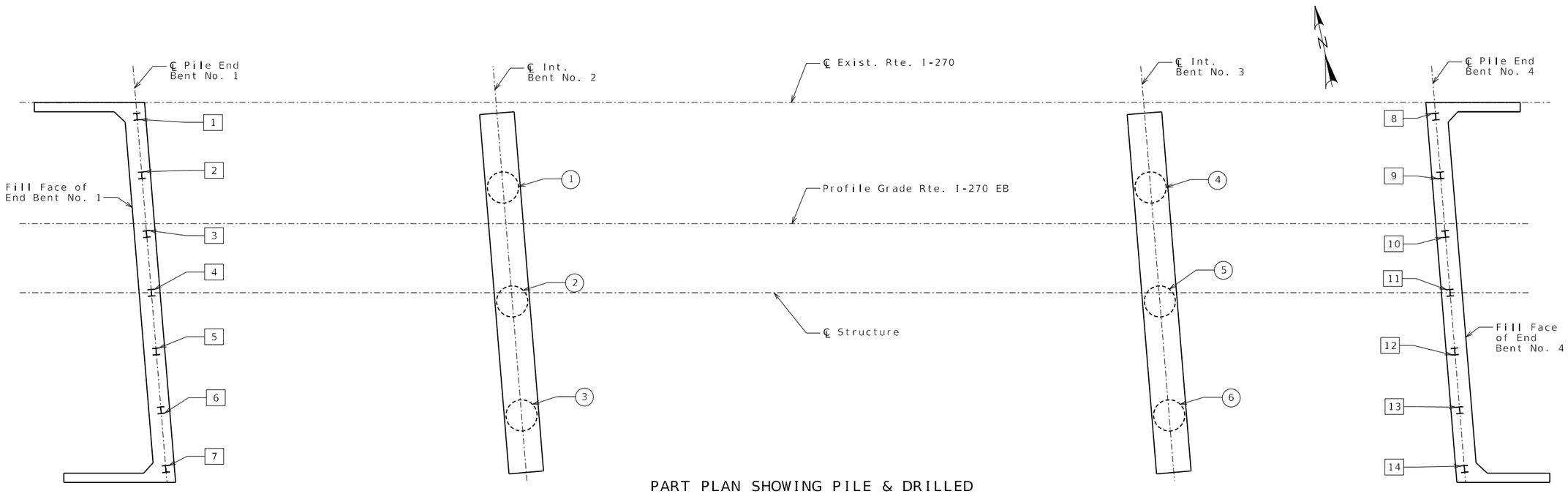

PART PLAN SHOWING PILE & DRILLED SHAFT NUMBERING FOR RECORDING AS-BUILT PILE DATA & AS-BUILT DRILLED SHAFT DATA

As-Built Pile Data

Pile No.	Length in Place (ft)	Computed Nominal Axial Compressive Resistance (kips)	Remarks
			End Bent No. 1
1			
2			
3			
4			
5			
6			
7			

As-Built Drilled Shaft Data

Shaft No.	Top of Sound Rock (Elev.)	Tip of Casing (Elev.)	Bottom of Rock Socket (Elev.)	Remarks
				Int. Bent No. 2
1				
2				
3				

As-Built Drilled Shaft Data

Shaft No.	Top of Sound Rock (Elev.)	Tip of Casing (Elev.)	Bottom of Rock Socket (Elev.)	Remarks
				Int. Bent No. 3
4				
5				
6				

As-Built Pile Data

Pile No.	Length in Place (ft)	Computed Nominal Axial Compressive Resistance (kips)	Remarks
			End Bent No. 4
8			
9			
10			
11			
12			
13			
14			

Note:
Indicate in remarks column:
A. Pile type and grade
B. Batter
C. Driven to practical refusal

This sheet to be completed by MoDOT construction personnel.

AS-BUILT PILE & DRILLED SHAFT DATA

Detailed September 2025
Checked September 2025

Note: This drawing is not to scale. Follow dimensions.

STATE OF MISSOURI
RYAN DAVID SHAW
NUMBER PE-2017000388
PROFESSIONAL ENGINEER
THIS SHEET HAS BEEN SIGNED, SEALED AND DATED ELECTRONICALLY

DATE PREPARED 4/2/2026
ROUTE I-270 | STATE MO
DISTRICT BR | SHEET NO. 43
COUNTY ST. LOUIS
JOB NO. JSL0021
CONTRACT ID.
PROJECT NO.
BRIDGE NO. A9493

DESCRIPTION	DATE

MISSOURI HIGHWAYS AND TRANSPORTATION COMMISSION
105 WEST CAPITOL
JEFFERSON CITY, MO 65102
1-888-ASK-MODOT (1-888-275-6636)

HDR Engineering, Inc.
1001 Highlands Plaza Drive
Suite 200
St. Louis, MO 63110
314-425-8300
Certificate of Authority: 000856

Missouri Department of Transportation
Construction and Materials

BORING NO. AB-1
Page 1 of 3

Job No.: MG24029 **County:** St. Louis **Route:** Bellefontaine
Design: **Skew:** **Location:** St. Louis County
Bent: **Logged By:** B. Nepal **Operator:** N. Urban
Station: **Northing:** 1069277.423 **Date of Work:** 12/11/24-12/13/24
Offset: **Easting:** 899688.819 **Depth to Water:** 38.0
Elevation: 498.9 **Requested Northing:** **Depth Hole Open:**
Requested Station: **Requested Easting:** **Time Change:**
Requested Offset: **Equipment:** CME 55HTX ,Split-Spoon Sampler, Shelby Tube, NQ
Requested Elevation: **Location Note:**
Drill No.: UES **Hammer Efficiency:** 80% **Drilling Method:** Hollow Stem Auger

Depth (ft)	Graphic	Description	Elevation (ft)	Sample Type	REC % (RQD %)	Blow Counts (N_{60})	Shear Data	Field Tests	Incex Tests
0		0.0-0.3' ASPHALT (3")							
		0.3-0.8' CONCRETE (6")							
		0.8-21.8' FILL: Dark grey, lean CLAY (CL)							
			495		22	3-5-4 (12)			MC = 16.8%
5									
		8.0' - CU test performed at 8.0 ft.: average shear strength = 0.95 tsf dry density = 103.4 pcf	490		75			PP = 1.50 tsf	MC = 22.1%
10		8.5' - brown, with crushed limestone and concrete below 8.5 ft.							
			485		17	7-5-7 (16)		PP = 1.00 tsf	MC = 25.0%
15									
			480		100		Qu Test Results MC = 19.81% γ_{moist} = 133.49 pcf	PP >4.50 tsf	MC = 19.8%
20									
		21.8-26.8' Possible FILL: Grey, lean CLAY (CL)							
			475		100	3-5-6 (15)		PP = 1.75 tsf	MC = 22.4%
25									
		26.8-41.8' Brown and grey, fat CLAY (CH)							
			470		100	2-2-4 (8)		PP = 1.00 tsf	MC = 25.5%
30									

N_{60} = (Em/60)Nm N_{60} - Corrected N value for standard 60% SPT efficiency; Em - Measured hammer efficiency in percent; Nm - Observed N-value; (1) = Assumed, (2) = Actual

Coordinate System: **Coordinate Zone:** **Coordinate Proj. Factor:**
Coordinate Datum: **Coordinate Units:** U.S. Survey Feet

* Persons using this information are cautioned that the materials shown are determined by the equipment noted and accuracy of the "log of materials" is limited thereby and by judgement of the operator. THIS INFORMATICN IS FOR DESIGN PURPOSES ONLY.

(Continued Next Page)

Missouri Department of Transportation
Construction and Materials

BORING NO. AB-1
Page 2 of 3

Job No.: MG24029 **County:** St. Louis **Route:** Bellefontaine
Design: **Skew:** **Location:** St. Louis County
Bent: **Logged By:** B. Nepal **Operator:** N. Urban
Station: **Northing:** 1069277.423 **Date of Work:** 12/11/24-12/13/24
Offset: **Easting:** 899688.819 **Depth to Water:** 38.0
Elevation: 498.9 **Requested Northing:** **Depth Hole Open:**
Requested Station: **Requested Easting:** **Time Change:**
Requested Offset: **Equipment:** CME 55HTX ,Split-Spoon Sampler, Shelby Tube, NQ
Requested Elevation: **Location Note:**
Drill No.: UES **Hammer Efficiency:** 80% **Drilling Method:** Hollow Stem Auger

Depth (ft)	Graphic	Description	Elevation (ft)	Sample Type	REC % (RQD %)	Blow Counts (N_{60})	Shear Data	Field Tests	Incex Tests
30		26.8-41.8' Brown and grey, fat CLAY (CH) *(continued)*							
			465		100	5-4-5 (12)		PP = 1.50 tsf	MC = 22.4%
35									
			460		100	5-4-6 (13)		PP = 1.50 tsf	MC = 24.6%
40									
		41.8-49.3' Tan, fine to coarse SAND (SW), trace gravel	455		100	3-5-7 (16)			MC = 8.5%
45									
			450		100	4-2-4 (8)		PP = 2.00 tsf	MC = 26.2%
50		49.3-56.8' Brown, sandy fat CLAY (CH), with sand seams							
		53.5' - grey to dark grey below 53.5 ft.	445		100	3-5-5 (13)		PP = 2.00 tsf	MC = 21.2%
55									
		56.8-61.8' Light to dark grey, fat CLAY (CH)							
			440		100	5-5-5 (13)		PP = 3.00 tsf	MC = 39.8%
60									

N_{60} = (Em/60)Nm N_{60} - Corrected N value for standard 60% SPT efficiency; Em - Measured hammer efficiency in percent; Nm - Observed N-value; (1) = Assumed, (2) = Actual

Coordinate System: **Coordinate Zone:** **Coordinate Proj. Factor:**
Coordinate Datum: **Coordinate Units:** U.S. Survey Feet

* Persons using this information are cautioned that the materials shown are determined by the equipment noted and accuracy of the "log of materials" is limited thereby and by judgement of the operator. THIS INFORMATION IS FOR DESIGN PURPOSES ONLY.

(Continued Next Page)

STATE OF MISSOURI
RYAN DAVID SHAW
NUMBER PE-2017000368
PROFESSIONAL ENGINEER
THIS SHEET HAS BEEN SIGNED, SEALED AND DATED ELECTRONICALLY

DATE PREPARED 4/2/2026
ROUTE I-270 | STATE MO
DISTRICT BR | SHEET NO. 44
COUNTY ST. LOUIS
JOB NO. JSL0021
CONTRACT ID.
PROJECT NO.
BRIDGE NO. A9493
DESCRIPTION
DATE

MISSOURI HIGHWAYS AND TRANSPORTATION COMMISSION
105 WEST CAPITOL
JEFFERSON CITY, MO 65102
1-888-ASK-MODOT (1-888-275-6636)

HDR Engineering, Inc.
1001 Highlands Plaza Drive
Suite 200
St. Louis, MO 63110
314-425-8300
Certificate of Authority: 000856

BORING DATA

Note: For location of borings, see Sheet No. 1.

Detailed September 2025
Checked September 2025

Note: This drawing is not to scale. Follow dimensions.

c:\pwworking\central01\d4975499\B_A9493_044_SL0021.dgn 9:23:44 AM 4/2/2026

LETTER BOREHOLE - MODOT_20151118.GDT - 1/31/25 08:59 - G:\PROJECT FILES\20241\MG24029 I-270 GAP FROM ROUTE 367 TO LILAC AVENUE\FIELD DATA\BELLEFONTAINE RDII-270_BELLEFONTAINE DECEMBER MODOT LOGS.GPJ

Missouri Department of Transportation
Construction and Materials

BORING NO. AB-1
Page 3 of 3

Job No.: MG24029 **County:** St. Louis **Route:** Bellefontaine
Design: **Skew:** **Location:** St. Louis County
Bent: **Logged By:** B. Nepal **Operator:** N. Urban
Station: **Northing:** 1069277.423 **Date of Work:** 12/11/24-12/13/24
Offset: **Easting:** 899688.819 **Depth to Water:** 38.0
Elevation: 498.9 **Requested Northing:** **Depth Hole Open:**
Requested Station: **Requested Easting:** **Time Change:**
Requested Offset: **Equipment:** CME 55HTX ,Split-Spoon Sampler, Shelby Tube, NQ
Requested Elevation: **Location Note:**
Drill No.: UES **Hammer Efficiency:** 80% **Drilling Method:** Hollow Stem Auger

Depth (ft)	Graphic	Description	Elevation (ft)	Sample Type	REC % (RQD %)	Blow Counts (N_{60})	Shear Data	Field Tests	Incex Tests
60		56.8-61.8' Light to dark grey, fat CLAY (CH) *(continued)*							
		61.8-71.8' Dark grey, sandy lean CLAY (CL)	435	X	100	3-5-7 (16)			MC = 21.6%
65									
		68.5' - trace gravel below 68.5 ft.	430	X	94	6-5-6 (15)			MC = 23.6%
70									
		71.8-75.0' Light grey, clayey SHALE	425	X	100	24-38-50/0.5'		PP >4.50 tsf	MC = 13.8%
75		75.0-75.3' Clayey SHALE (washout)							
		75.3-76.0' Grey, clayey SHALE, soft							
		76.0-85.3' Grey, SHALE, very soft to soft, moderately weathered, thin to massive bedded, very finely grained	420		98 (83)				
80									
			415		60 (48)				
85		Refusal at 75.0 feet. Bottom of borehole at 85.3 feet.							

N_{60} = (Em/60)Nm N_{60} - Corrected N value for standard 60% SPT efficiency; Em - Measured hammer efficiency in percent; Nm - Observed N-value; (1) = Assumed, (2) = Actual

Coordinate System: **Coordinate Zone:** **Coordinate Proj. Factor:**
Coordinate Datum: **Coordinate Units:** U.S. Survey Feet

* Persons using this information are cautioned that the materials shown are determined by the equipment noted and accuracy of the "log of materials" is limited thereby and by judgement of the operator. THIS INFORMATICN IS FOR DESIGN PURPOSES ONLY.

LETTER BOREHOLE - MODOT_20151118.GDT - 1/31/25 08:59 - G:\PROJECT FILES\20241\MG24029 I-270 GAP FROM ROUTE 367 TO LILAC AVENUE\FIELD DATA\BELLEFONTAINE RDI\I-270_BELLEFONTAINE DECEMBER MODOT LOGS.GPJ

Missouri Department of Transportation
Construction and Materials

BORING NO. A9493-101
Page 1 of 2

Job No.: MG24029 **County:** St. Louis **Route:** Bellefontaine
Design: **Skew:** **Location:** St. Louis County
Bent: **Logged By:** B. Nepal **Operator:** G. Shetley
Station: **Northing:** 1069321.966 **Date of Work:** 05/30/24-05/31/24
Offset: **Easting:** 899853.231 **Depth to Water:** 22.0
Elevation: 480.3 **Requested Northing:** **Depth Hole Open:**
Requested Station: **Requested Easting:** **Time Change:**
Requested Offset: **Equipment:** CME 750Y ,Split-Spoon Sampler, Shelby Tube, NQ
Requested Elevation: **Location Note:**
Drill No.: UES **Hammer Efficiency:** 95% **Drilling Method:** Hollow Stem Auger

Depth (ft)	Graphic	Description	Elevation (ft)	Sample Type	REC % (RQD %)	Blow Counts (N_{60})	Shear Data	Field Tests	Incex Tests
0		0.0-0.5' ASPHALT (6")	480						
		0.5-1.0' CONCRETE (6")							
		1.0-5.5' FILL: Brown, lean CLAY (CL), trace concrete fragments							
5			475	X	19	5-5-10 (24)			MC = 10.7%
		5.5-11.0' Brown and grey, lean CLAY (CL)							
10			470	■	58		Qu Test Results UCS = 2.44 ksf MC = 25.1% γ_{most} = 119.85 pcf	PP = 1.00 tsf	LL = 42 PL = 19 MC = 25.1%
		11.0-16.0' Brown and grey, fat CLAY (CH)							
15			465	X	78	0-2-2 (6)		PP = 0.50 tsf	MC = 30.7%
		16.0-21.0' Light brown, lean CLAY (CL), trace sand							
20			460	■	42			PP = 0.50 tsf	LL = 42 PL = 16 MC = 13.7%
		▽ 21.0-26.0' Brown, silty SAND (SM), fine grained							
25		23.5' Sieve Analysis at 23.5 ft.: - 0.0% retained on No. 4 sieve - 16.7% passing on No. 200 sieve	455	X	100	1-1-2 (5)			MC = 33.9%
		26.0-31.0' Brown, lean CLAY (CL), trace to with fine sand							
30			450	X	100	3-3-4 (11)		PP = 2.00 tsf	MC = 14.2%
		31.0-46.0' Light grey to dark grey, fat CLAY (CH)							
35				X	100	3-3-3 (10)	Qu Test Results MC = 26%	PP = 2.50 tsf	LL = 70 PL = 19

N_{60} = (Em/60)Nm N_{60} - Corrected N value for standard 60% SPT efficiency; Em - Measured hammer efficiency in percent; Nm - Observed N-value; (1) = Assumed, (2) = Actual

Coordinate System: **Coordinate Zone:** **Coordinate Proj. Factor:**
Coordinate Datum: **Coordinate Units:** U.S. Survey Feet

* Persons using this information are cautioned that the materials shown are determined by the equipment noted and accuracy of the "log of materials" is limited thereby and by judgement of the operator. THIS INFORMATION IS FOR DESIGN PURPOSES ONLY.

(Continued Next Page)

LETTER BOREHOLE - MODOT_20151118.GDT - 1/31/25 08:59 - G:\PROJECT FILES\20241\MG24029 I-270 GAP FROM ROUTE 367 TO LILAC AVENUE\FIELD DATA\BELLEFONTAINE RDI\I-270_BELLEFONTAINE DECEMBER MODOT LOGS.GPJ

STATE OF MISSOURI
RYAN DAVID SHAW
NUMBER PE-2017000368
PROFESSIONAL ENGINEER
THIS SHEET HAS BEEN SIGNED, SEALED AND DATED ELECTRONICALLY

DATE PREPARED 4/2/2026
ROUTE I-270 | STATE MO
DISTRICT BR | SHEET NO. 45
COUNTY ST. LOUIS
JOB NO. JSL0021
CONTRACT ID.
PROJECT NO.
BRIDGE NO. A9493

DESCRIPTION | DATE

MISSOURI HIGHWAYS AND TRANSPORTATION COMMISSION
105 WEST CAPITOL
JEFFERSON CITY, MO 65102
1-888-ASK-MODOT (1-888-275-6636)

HDR Engineering, Inc.
1001 Highlands Plaza Drive
Suite 200
St. Louis, MO 63110
314-425-8300
Certificate of Authority: 000856

BORING DATA

Note: For location of borings, see Sheet No. 1.

Detailed September 2025
Checked September 2025

Note: This drawing is not to scale. Follow dimensions.

c:\pwworking\central01\d4975499\B_A9493_045_SL0021.dgn 9:25:00 AM 4/2/2026

Missouri Department of Transportation
Construction and Materials

BORING NO. A9493-101
Page 2 of 2

Job No.: MG24029 **County:** St. Louis **Route:** Bellefontaine
Design: **Skew:** **Location:** St. Louis County
Bent: **Logged By:** B. Nepal **Operator:** G. Shetley
Station: **Northing:** 1069321.966 **Date of Work:** 05/30/24-05/31/24
Offset: **Easting:** 899853.231 **Depth to Water:** 22.0
Elevation: 480.3 **Requested Northing:** **Depth Hole Open:**
Requested Station: **Requested Easting:** **Time Change:**
Requested Offset: **Equipment:** CME 750Y ,Split-Spoon Sampler, Shelby Tube, NQ
Requested Elevation: **Location Note:**
Drill No.: UES **Hammer Efficiency:** 95% **Drilling Method:** Hollow Stem Auger

Depth (ft)	Graphic	Description	Elevation (ft)	Sample Type	REC % (RQD %)	Blow Counts (N_{60})	Shear Data	Field Tests	Incex Tests
35		31.0-46.0' Light grey to dark grey, fat CLAY (CH) *(continued)*	445						
40		36.0' - dark grey, trace silt below 36 ft.	440	X	100	2-3-3 (10)		PP = 2.00 tsf	MC = 42.8%
45			435	X	100	3-3-4 (11)		PP = 3.00 tsf	MC = 30.9%
50		46.0-51.0' Dark grey, sandy CLAY (CL), with gravel	430	X	100	4-6-8 (22)		PP = 2.00 tsf	MC = 14.0%
55		51.0-55.0' Grey, clayey SHALE	425	X	100	25-30-50/0.3'		PP = 4.50 tsf	MC = 8.2%
60		55.0-65.0' Grey, SHALE, moderately to highly weathered, soft, very finely grained, moderately to highly fractured	420		100 (0)				
					100 (0)				
					100 (79)				
65		Refusal at 54.8 feet. Bottom of borehole at 65.0 feet.							

N_{60} = (Em/60)Nm N_{60} - Corrected N value for standard 60% SPT efficiency; Em - Measured hammer efficiency in percent; Nm - Observed N-value; (1) = Assumed, (2) = Actual

Coordinate System: **Coordinate Zone:** **Coordinate Proj. Factor:**
Coordinate Datum: **Coordinate Units:** U.S. Survey Feet

* Persons using this information are cautioned that the materials shown are determined by the equipment noted and accuracy of the "log of materials" is limited thereby and by judgement of the operator. THIS INFORMATICN IS FOR DESIGN PURPOSES ONLY.

Missouri Department of Transportation
Construction and Materials

BORING NO. P-1 (ALT)
Page 1 of 3

Job No.: MG24029 **County:** St. Louis **Route:** Bellefontaine
Design: **Skew:** **Location:** St. Louis County
Bent: **Logged By:** B. Nepal **Operator:** G. Shetley
Station: **Northing:** 1069236.61 **Date of Work:** 12/04/24-12/04/24
Offset: **Easting:** 899778.355 **Depth to Water:** 33.0
Elevation: 480.3 **Requested Northing:** **Depth Hole Open:**
Requested Station: **Requested Easting:** **Time Change:**
Requested Offset: **Equipment:** CME 750Y ,Split-Spoon Sampler, NQ
Requested Elevation: **Location Note:**
Drill No.: UES **Hammer Efficiency:** 95% **Drilling Method:** Hollow Stem Auger

Depth (ft)	Graphic	Description	Elevation (ft)	Sample Type	REC % (RQD %)	Blow Counts (N_{60})	Shear Data	Field Tests	Incex Tests
0		0.0-0.5' ASPHALT (6")	480						
		0.5-1.0' CONCRETE (6")							
		1.0-54.5' Drilled without sampling to 54.5 ft.							
5			475						
10			470						
15			465						
20			460						
25			455						
30									

N_{60} = (Em/60)Nm N_{60} - Corrected N value for standard 60% SPT efficiency; Em - Measured hammer efficiency in percent; Nm - Observed N-value; (1) = Assumed, (2) = Actual

Coordinate System: **Coordinate Zone:** **Coordinate Proj. Factor:**
Coordinate Datum: **Coordinate Units:** U.S. Survey Feet

* Persons using this information are cautioned that the materials shown are determined by the equipment noted and accuracy of the "log of materials" is limited thereby and by judgement of the operator. THIS INFORMATION IS FOR DESIGN PURPOSES ONLY.

(Continued Next Page)

LETTER BOREHOLE - MODOT_20151118.GDT - 1/31/25 08:59 - G:\PROJECT FILES\20241\MG24029 I-270 GAP FROM ROUTE 367 TO LILAC AVENUE\FIELD DATA\BELLEFONTAINE RDI\I-270_BELLEFONTAINE DECEMBER MODOT LOGS.GPJ

STATE OF MISSOURI
RYAN DAVID SHAW
NUMBER PE-2011000368
PROFESSIONAL ENGINEER
THIS SHEET HAS BEEN SIGNED, SEALED AND DATED ELECTRONICALLY

DATE PREPARED 4/2/2026
ROUTE I-270 | STATE MO
DISTRICT BR | SHEET NO. 46
COUNTY ST. LOUIS
JOB NO. JSL0021
CONTRACT ID.
PROJECT NO.
BRIDGE NO. A9493

DESCRIPTION | DATE

MISSOURI HIGHWAYS AND TRANSPORTATION COMMISSION
105 WEST CAPITOL
JEFFERSON CITY, MO 65102
1-888-ASK-MODOT (1-888-275-6636)

HDR Engineering, Inc.
1001 Highlands Plaza Drive
Suite 200
St. Louis, MO 63110
314-425-8300
Certificate of Authority: 000856

BORING DATA

Note: For location of borings, see Sheet No. 1.

Detailed September 2025
Checked September 2025

Note: This drawing is not to scale. Follow dimensions.

c:\pwworking\central01\d4975499\B_A9493_046_SL0021.dgn 9:26:15 AM 4/2/2026

Missouri Department of Transportation
Construction and Materials

BORING NO. P-1 (ALT)
Page 2 of 3

Job No.: MG24029 **County:** St. Louis **Route:** Bellefontaine
Design: **Skew:** **Location:** St. Louis County
Bent: **Logged By:** B. Nepal **Operator:** G. Shetley
Station: **Northing:** 1069236.61 **Date of Work:** 12/04/24-12/04/24
Offset: **Easting:** 899778.355 **Depth to Water:** 33.0
Elevation: 480.3 **Requested Northing:** **Depth Hole Open:**
Requested Station: **Requested Easting:** **Time Change:**
Requested Offset: **Equipment:** CME 750Y ,Split-Spoon Sampler, NQ
Requested Elevation: **Location Note:**
Drill No.: UES **Hammer Efficiency:** 95% **Drilling Method:** Hollow Stem Auger

Depth (ft)	Graphic	Description	Elevation (ft)	Sample Type	REC % (RQD %)	Blow Counts (N_{60})	Shear Data	Field Tests	Incex Tests
30		1.0-54.5' Drilled without sampling to 54.5 ft. *(continued)*	450						
35			445						
40			440						
45			435						
50			430						
55		54.5-56.0' Grey, clayey SHALE	425		100	26-34-50/0.4'		PP >4.50 tsf	MC = 15.6%
60		56.0-86.0' Grey, SHALE, moderately to highly weathered, very soft to soft, very finely grained 55.4' - compressive strength = 13 psi			100 (28)				

N_{60} = (Em/60)Nm N_{60} - Corrected N value for standard 60% SPT efficiency; Em - Measured hammer efficiency in percent; Nm - Observed N-value; (1) = Assumed, (2) = Actual

Coordinate System: **Coordinate Zone:** **Coordinate Proj. Factor:**
Coordinate Datum: **Coordinate Units:** U.S. Survey Feet

* Persons using this information are cautioned that the materials shown are determined by the equipment noted and accuracy of the "log of materials" is limited thereby and by judgement of the operator. THIS INFORMATICN IS FOR DESIGN PURPOSES ONLY.

(Continued Next Page)

Missouri Department of Transportation
Construction and Materials

BORING NO. P-1 (ALT)
Page 3 of 3

Job No.: MG24029 **County:** St. Louis **Route:** Bellefontaine
Design: **Skew:** **Location:** St. Louis County
Bent: **Logged By:** B. Nepal **Operator:** G. Shetley
Station: **Northing:** 1069236.61 **Date of Work:** 12/04/24-12/04/24
Offset: **Easting:** 899778.355 **Depth to Water:** 33.0
Elevation: 480.3 **Requested Northing:** **Depth Hole Open:**
Requested Station: **Requested Easting:** **Time Change:**
Requested Offset: **Equipment:** CME 750Y ,Split-Spoon Sampler, NQ
Requested Elevation: **Location Note:**
Drill No.: UES **Hammer Efficiency:** 95% **Drilling Method:** Hollow Stem Auger

Depth (ft)	Graphic	Description	Elevation (ft)	Sample Type	REC % (RQD %)	Blow Counts (N_{60})	Shear Data	Field Tests	Incex Tests
60		59.6' - compressive strength = 9 psi 56.0-86.0' Grey, SHALE, moderately to highly weathered, very soft to soft, very finely grained *(continued)* 60.3' - compressive strength = 12 psi 62.3' - shaly LIMESTONE, moderately hard from 62.3 to 63.2 ft. 63.2' - soft below 63.2 ft.	420		43 (9)				
65		66.0' - compressive strength = 51 psi 66.5' - compressive strength = 57 psi 67.2' - compressive strength = 60 psi 67.6' - compressive strength = 37 psi 68.6' - compressive strength = 43 psi	415		100 (88)				
70		70.0' - compressive strength = 46 psi 70.3' - dark grey, moderately hard below 70.0 ft. 71.0' - compressive strength = 280 psi	410						
75		73.0' - compressive strength = 161 psi 73.1' - brown below 73 ft. 74.0' - compressive strength = 425 psi 75.5' - compressive strength = 152 psi 76.0' - reddish grey below 76 ft. 77.0' - compressive strength = 519 psi	405		97 (93)				
80		79.0' - compressive strength = 253 psi 80.0' - very silty below 80 ft.	400		100 (83)				
85		83.0' - compressive strength = 514 psi 84.0' - compressive strength = 958 psi 85.0' - compressive strength = 658 psi 85.5' - 1.0" limestone seam at 85.5 ft. Refusal at 55.9 feet. Bottom of borehole at 86.0 feet.	395		98 (97)				

N_{60} = (Em/60)Nm N_{60} - Corrected N value for standard 60% SPT efficiency; Em - Measured hammer efficiency in percent; Nm - Observed N-value; (1) = Assumed, (2) = Actual

Coordinate System: **Coordinate Zone:** **Coordinate Proj. Factor:**
Coordinate Datum: **Coordinate Units:** U.S. Survey Feet

* Persons using this information are cautioned that the materials shown are determined by the equipment noted and accuracy of the "log of materials" is limited thereby and by judgement of the operator. THIS INFORMATION IS FOR DESIGN PURPOSES ONLY.

LETTER BOREHOLE - MODOT_20151118.GDT - 1/31/25 08:59 - G:\PROJECT FILES\2024\MG24029 I-270 GAP FROM ROUTE 367 TO LILAC AVENUE\FIELD DATA\BELLEFONTAINE RDI\I-270_BELLEFONTAINE DECEMBER MODOT LOGS.GPJ

STATE OF MISSOURI
RYAN DAVID SHAW
NUMBER PE-2017000368
PROFESSIONAL ENGINEER
THIS SHEET HAS BEEN SIGNED, SEALED AND DATED ELECTRONICALLY

DATE PREPARED 4/2/2026
ROUTE I-270 | STATE MO
DISTRICT BR | SHEET NO. 47
COUNTY ST. LOUIS
JOB NO. JSL0021
CONTRACT ID.
PROJECT NO.
BRIDGE NO. A9493

DESCRIPTION | DATE

MISSOURI HIGHWAYS AND TRANSPORTATION COMMISSION
105 WEST CAPITOL
JEFFERSON CITY, MO 65102
1-888-ASK-MODOT (1-888-275-6636)

HDR Engineering, Inc.
1001 Highlands Plaza Drive
Suite 200
St. Louis, MO 63110
314-425-8300
Certificate of Authority: 000856

BORING DATA

Note: For location of borings, see Sheet No. 1.

Detailed September 2025
Checked September 2025

Note: This drawing is not to scale. Follow dimensions.

c:\pwworking\central01\d4975499\B_A9493_047_SL0021.dgn 9:27:34 AM 4/2/2026

Missouri Department of Transportation
Construction and Materials

BORING NO. A9493-201
Page 1 of 2

Job No.: MG24029 **County:** St. Louis **Route:** Bellefontaine
Design: **Skew:** **Location:** St. Louis County
Bent: **Logged By:** J. Stauffer **Operator:** S. Conrad
Station: **Northing:** 1069308.725 **Date of Work:** 06/06/24-06/07/24
Offset: **Easting:** 899917.964 **Depth to Water:** 24.0
Elevation: 479.0 **Requested Northing:** **Depth Hole Open:**
Requested Station: **Requested Easting:** **Time Change:**
Requested Offset: **Equipment:** CME 55LC ,Split-Spoon Sampler, Shelby Tube, NQ
Requested Elevation: **Location Note:**
Drill No.: UES **Hammer Efficiency:** 79% **Drilling Method:** Hollow Stem Auger

Depth (ft)	Graphic	Description	Elevation (ft)	Sample Type	REC % (RQD %)	Blow Counts (N_{60})	Shear Data	Field Tests	Incex Tests
0		0.0-0.5' TOPSOIL (6.0")							
		0.5-6.0' FILL: Grey, lean CLAY (CL), trace sand and gravel							
			475		92		Qu Test Results UCS = 2.76 ksf MC = 20.7% γ_{moist} = 124.8 pcf	PP = 3.25 tsf	LL = 45 PL = 19 MC = 20.7%
5		6.0-12.0' Brown and grey, fat CLAY (CH)							
			470		78	2-2-3 (7)		PP = 1.25 tsf	MC = 30.1%
10		12.0-22.0' Grey, lean CLAY (CL)							
			465		89	2-2-4 (8)		PP = 0.75 tsf	MC = 23.9%
15									
			460		0	5-6-9 (20)			
20									
		22.0-24.5' Brown and grey, clayey SAND (SC)	455		100	1-2-3 (7)		PP <0.25 tsf	MC = 29.0%
25		24.5-29.5' Brown and grey, fat CLAY (CH), trace sand							
			450		100	3-3-6 (12)		PP = 3.00 tsf	MC = 40.9%
30		29.5-32.0' Brown and grey, clayey SAND (SC)							
		32.0-42.0' Grey, fat CLAY (CH)	445		100	2-3-4 (9)		PP = 2.00 tsf	MC = 35.3%
35									

N_{60} = (Em/60)Nm N_{60} - Corrected N value for standard 60% SPT efficiency; Em - Measured hammer efficiency in percent; Nm - Observed N-value; (1) = Assumed, (2) = Actual

Coordinate System: **Coordinate Zone:** **Coordinate Proj. Factor:**
Coordinate Datum: **Coordinate Units:** U.S. Survey Feet

* Persons using this information are cautioned that the materials shown are determined by the equipment noted and accuracy of the "log of materials" is limited thereby and by judgement of the operator. THIS INFORMATICN IS FOR DESIGN PURPOSES ONLY.

(Continued Next Page)

Missouri Department of Transportation
Construction and Materials

BORING NO. A9493-201
Page 2 of 2

Job No.: MG24029 **County:** St. Louis **Route:** Bellefontaine
Design: **Skew:** **Location:** St. Louis County
Bent: **Logged By:** J. Stauffer **Operator:** S. Conrad
Station: **Northing:** 1069308.725 **Date of Work:** 06/06/24-06/07/24
Offset: **Easting:** 899917.964 **Depth to Water:** 24.0
Elevation: 479.0 **Requested Northing:** **Depth Hole Open:**
Requested Station: **Requested Easting:** **Time Change:**
Requested Offset: **Equipment:** CME 55LC ,Split-Spoon Sampler, Shelby Tube, NQ
Requested Elevation: **Location Note:**
Drill No.: UES **Hammer Efficiency:** 79% **Drilling Method:** Hollow Stem Auger

Depth (ft)	Graphic	Description	Elevation (ft)	Sample Type	REC % (RQD %)	Blow Counts (N_{60})	Shear Data	Field Tests	Incex Tests
35		32.0-42.0' Grey, fat CLAY (CH) *(continued)*							
			440		100	4-4-5 (12)		PP = 1.50 tsf	MC = 36.2%
40		42.0-48.0' Grey, lean CLAY (CL)							
			435		100	3-4-5 (12)		PP = 2.25 tsf	MC = 29.9%
45		48.0-50.5' Grey, clayey SHALE							
			430		88	15-30-50/0.3'		PP >4.50 tsf	MC = 14.8%
50		50.5-60.2' Dark to light grey, SHALE, moderately to highly weathered, soft, very finely grained 52.0' - with coal seams from 52.0 to 53.0 ft.							
			425		29 (0)				
55									
			420		40 (12)				
60		Refusal at 50.5 feet. Bottom of borehole at 60.2 feet.			100	50/0.2'			MC = 10.1%

N_{60} = (Em/60)Nm N_{60} - Corrected N value for standard 60% SPT efficiency; Em - Measured hammer efficiency in percent; Nm - Observed N-value; (1) = Assumed, (2) = Actual

Coordinate System: **Coordinate Zone:** **Coordinate Proj. Factor:**
Coordinate Datum: **Coordinate Units:** U.S. Survey Feet

* Persons using this information are cautioned that the materials shown are determined by the equipment noted and accuracy of the "log of materials" is limited thereby and by judgement of the operator. THIS INFORMATION IS FOR DESIGN PURPOSES ONLY.

LETTER BOREHOLE - MODOT_20151118.GDT - 1/31/25 08:59 - G:\PROJECT FILES\2024\MG24029 I-270 GAP FROM ROUTE 367 TO LILAC AVENUE\FIELD DATA\BELLEFONTAINE RDII-270_BELLEFONTAINE DECEMBER MODOT LOGS.GPJ

STATE OF MISSOURI
RYAN DAVID SHAW
NUMBER PE-2017000368
PROFESSIONAL ENGINEER
THIS SHEET HAS BEEN SIGNED, SEALED AND DATED ELECTRONICALLY

DATE PREPARED 4/2/2026
ROUTE I-270 | STATE MO
DISTRICT BR | SHEET NO. 48
COUNTY ST. LOUIS
JOB NO. JSL0021
CONTRACT ID.
PROJECT NO.
BRIDGE NO. A9493

DESCRIPTION | DATE

MISSOURI HIGHWAYS AND TRANSPORTATION COMMISSION
105 WEST CAPITOL
JEFFERSON CITY, MO 65102
1-888-ASK-MODOT (1-888-275-6636)

HDR Engineering, Inc.
1001 Highlands Plaza Drive
Suite 200
St. Louis, MO 63110
314-425-8300
Certificate of Authority: 000856

BORING DATA

Note: For location of borings, see Sheet No. 1.

Detailed September 2025
Checked September 2025

Note: This drawing is not to scale. Follow dimensions.

c:\pwworking\central01\d4975499\B_A9493_048_SL0021.dgn 9:28:51 AM 4/2/2026

Missouri Department of Transportation
Construction and Materials

BORING NO. P-2
Page 1 of 3

Job No.: MG24029 **County:** St. Louis **Route:** Bellefontaine
Design: **Skew:** **Location:** St. Louis County
Bent: **Logged By:** B. Nepal **Operator:** G. Shetley
Station: **Northing:** 1069207.553 **Date of Work:** 12/09/24-12/10/24
Offset: **Easting:** 899841.814 **Depth to Water:** 38.0
Elevation: 477.1 **Requested Northing:** **Depth Hole Open:**
Requested Station: **Requested Easting:** **Time Change:**
Requested Offset: **Equipment:** CME 750Y ,Split-Spoon Sampler, NQ
Requested Elevation: **Location Note:**
Drill No.: UES **Hammer Efficiency:** 95% **Drilling Method:** Hollow Stem Auger

Depth (ft)	Graphic	Description	Elevation (ft)	Sample Type	REC % (RQD %)	Blow Counts (N_{60})	Shear Data	Field Tests	Incex Tests
0		0.0-0.5' TOPSOIL (6")	475						
		0.5-50.0' Drilled without sampling to 50.0 ft.							
5			470						
10			465						
15			460						
20			455						
25			450						
30									

N_{60} = (Em/60)Nm N_{60} - Corrected N value for standard 60% SPT efficiency; Em - Measured hammer efficiency in percent; Nm - Observed N-value; (1) = Assumed, (2) = Actual

Coordinate System: **Coordinate Zone:** **Coordinate Proj. Factor:**
Coordinate Datum: **Coordinate Units:** U.S. Survey Feet

* Persons using this information are cautioned that the materials shown are determined by the equipment noted and accuracy of the "log of materials" is limited thereby and by judgement of the operator. THIS INFORMATICN IS FOR DESIGN PURPOSES ONLY.

(Continued Next Page)

Missouri Department of Transportation
Construction and Materials

BORING NO. P-2
Page 2 of 3

Job No.: MG24029 **County:** St. Louis **Route:** Bellefontaine
Design: **Skew:** **Location:** St. Louis County
Bent: **Logged By:** B. Nepal **Operator:** G. Shetley
Station: **Northing:** 1069207.553 **Date of Work:** 12/09/24-12/10/24
Offset: **Easting:** 899841.814 **Depth to Water:** 38.0
Elevation: 477.1 **Requested Northing:** **Depth Hole Open:**
Requested Station: **Requested Easting:** **Time Change:**
Requested Offset: **Equipment:** CME 750Y ,Split-Spoon Sampler, NQ
Requested Elevation: **Location Note:**
Drill No.: UES **Hammer Efficiency:** 95% **Drilling Method:** Hollow Stem Auger

Depth (ft)	Graphic	Description	Elevation (ft)	Sample Type	REC % (RQD %)	Blow Counts (N_{60})	Shear Data	Field Tests	Incex Tests
30		0.5-50.0' Drilled without sampling to 50.0 ft. *(continued)*	445						
35			440						
40			435						
45			430						
50		50.0-51.0' Very dark grey, clayey SHALE	425		100	10-50/0.5'		MC = 21.3%	
		51.0-52.7' Dark grey, COAL, moderately hard, aphanitic							
55		52.7-81.0' Grey, SHALE, moderately to highly weathered, soft, very finely grained 53.5' - compressive strength = 49 psi	420		88 (60)				
		56.0' - compressive strength = 20 psi			100 (88)				
60					71 (58)				

N_{60} = (Em/60)Nm N_{60} - Corrected N value for standard 60% SPT efficiency; Em - Measured hammer efficiency in percent; Nm - Observed N-value; (1) = Assumed, (2) = Actual

Coordinate System: **Coordinate Zone:** **Coordinate Proj. Factor:**
Coordinate Datum: **Coordinate Units:** U.S. Survey Feet

* Persons using this information are cautioned that the materials shown are determined by the equipment noted and accuracy of the "log of materials" is limited thereby and by judgement of the operator. THIS INFORMATION IS FOR DESIGN PURPOSES ONLY.

(Continued Next Page)

LETTER BOREHOLE - MODOT_20151118.GDT - 1/31/25 08:59 - G:\PROJECT FILES\2024\MG24029 I-270 GAP FROM ROUTE 367 TO LILAC AVENUE\FIELD DATA\BELLEFONTAINE RDI\I-270_BELLEFONTAINE DECEMBER MODOT LOGS.GPJ

BORING DATA

Note: For location of borings, see Sheet No. 1.

Detailed September 2025
Checked September 2025

Note: This drawing is not to scale. Follow dimensions.

c:\pwworking\central01\d4975499\B_A9493_049_SL0021.dgn 9:30:10 AM 4/2/2026

RYAN DAVID SHAW
NUMBER PE-2017000368
STATE OF MISSOURI
PROFESSIONAL ENGINEER
THIS SHEET HAS BEEN SIGNED, SEALED AND DATED ELECTRONICALLY

DATE PREPARED 4/2/2026
ROUTE I-270 | STATE MO
DISTRICT BR | SHEET NO. 49
COUNTY ST. LOUIS
JOB NO. JSL0021
CONTRACT ID.
PROJECT NO.
BRIDGE NO. A9493

DESCRIPTION | DATE

MISSOURI HIGHWAYS AND TRANSPORTATION COMMISSION
105 WEST CAPITOL
JEFFERSON CITY, MO 65102
1-888-ASK-MODOT (1-888-275-6636)

HDR Engineering, Inc.
1001 Highlands Plaza Drive
Suite 200
St. Louis, MO 63110
314-425-8300
Certificate of Authority: 000856

Missouri Department of Transportation
Construction and Materials

BORING NO. P-2
Page 3 of 3

Job No.: MG24029 **County:** St. Louis **Route:** Bellefontaine
Design: **Skew:** **Location:** St. Louis County
Bent: **Logged By:** B. Nepal **Operator:** G. Shetley
Station: **Northing:** 1069207.553 **Date of Work:** 12/09/24-12/10/24
Offset: **Easting:** 899841.814 **Depth to Water:** 38.0
Elevation: 477.1 **Requested Northing:** **Depth Hole Open:**
Requested Station: **Requested Easting:** **Time Change:**
Requested Offset: **Equipment:** CME 750Y ,Split-Spoon Sampler, NQ
Requested Elevation: **Location Note:**
Drill No.: UES **Hammer Efficiency:** 95% **Drilling Method:** Hollow Stem Auger

Depth (ft)	Graphic	Description	Elevation (ft)	Sample Type	REC % (RQD %)	Blow Counts (N_{60})	Shear Data	Field Tests	Incex Tests
60		52.7-81.0' Grey, SHALE, moderately to highly weathered, soft, very finely grained *(continued)*							
		61.0' - shaly LIMESTONE from 61.0 to 63.0 ft.	415		100 (83)				
		62.0' - compressive strength = 4,936 psi			63 (38)				
65		65.8' - compressive strength = 92 psi							
		66.5' - compressive strength = 116 psi	410		100 (86)				
		67.5' - compressive strength = 42 psi							
		69.0' - shaly LIMESTONE from 69.0 to 70.0 ft.			100 (86)				
70		69.5' - compressive strength = 751 psi							
		70.0' - brownish grey below 70 ft.							
		70.5' - compressive strength = 60 psi	405		100 (100)				
		72.5' - compressive strength = 56 psi							
		73.0' - brown, moderately hard, silty below 73.0 ft.							
75		73.5' - compressive strength = 385 psi							
		74.5' - compressive strength = 508 psi							
		75.0' - reddish brown below 75 ft.							
		76.0' - compressive strength = 198 psi	400		95 (95)				
		78.5' - compressive strength = 339 psi							
80		80.5' - compressive strength = 595 psi			100 (100)				
		Refusal at 51.0 feet.							
		Bottom of borehole at 81.0 feet.							

N_{60} = (Em/60)Nm N_{60} - Corrected N value for standard 60% SPT efficiency; Em - Measured hammer efficiency in percent; Nm - Observed N-value; (1) = Assumed, (2) = Actual

Coordinate System: **Coordinate Zone:** **Coordinate Proj. Factor:**
Coordinate Datum: **Coordinate Units:** U.S. Survey Feet

* Persons using this information are cautioned that the materials shown are determined by the equipment noted and accuracy of the "log of materials" is limited thereby and by judgement of the operator. THIS INFORMATICN IS FOR DESIGN PURPOSES ONLY.

LETTER BOREHOLE - MODOT_20151118.GDT - 1/31/25 08:59 - G:\PROJECT FILES\2024\MG24029 I-270 GAP FROM ROUTE 367 TO LILAC AVENUE\FIELD DATA\BELLEFONTAINE RDI\I-270_BELLEFONTAINE DECEMBER MODOT LOGS.GPJ

Missouri Department of Transportation
Construction and Materials

BORING NO. AB-2
Page 1 of 3

Job No.: MG24029 **County:** St. Louis **Route:** Bellefontaine
Design: **Skew:** **Location:** St. Louis County
Bent: **Logged By:** J. Stauffer **Operator:** S. Conrad
Station: **Northing:** 1069227.724 **Date of Work:** 12/11/24-12/13/24
Offset: **Easting:** 899918.006 **Depth to Water:** 32.0
Elevation: 497.0 **Requested Northing:** **Depth Hole Open:**
Requested Station: **Requested Easting:** **Time Change:**
Requested Offset: **Equipment:** CME 55LC ,Split-Spoon Sampler, Shelby Tube, NQ
Requested Elevation: **Location Note:**
Drill No.: UES **Hammer Efficiency:** 79% **Drilling Method:** Hollow Stem Auger

Depth (ft)	Graphic	Description	Elevation (ft)	Sample Type	REC % (RQD %)	Blow Counts (N_{60})	Shear Data	Field Tests	Incex Tests
0		0.0-0.8' ASPHALT (10")							
		0.8-1.8' FILL: GRAVEL SUBBASE (12")	495						
		1.8-22.0' FILL: Brown and grey, lean CLAY (CL), trace sand and gravel							
5					0				
			490						
10					25	2-3-3 (8)		PP = 1.00 tsf	MC = 22.5%
			485						
15					92		Qu Test Results UCS = 2.80 ksf MC = 22.7% γ_{moist} = 129.76 pcf		MC = 22.7%
			480						
20					78	4-7-10 (22)		PP = 2.50 tsf	MC = 20.0%
		22.0-27.0' FILL: Grey, lean CLAY (CL), trace sand	475						
25					61	6-9-12 (28)		PP = 1.25 tsf	MC = 15.8%
		27.0-32.0' Grey, lean CLAY (CL)	470						
30					100	0-3-4 (9)		PP = 0.50 tsf	MC = 25.9%

N_{60} = (Em/60)Nm N_{60} - Corrected N value for standard 60% SPT efficiency; Em - Measured hammer efficiency in percent; Nm - Observed N-value; (1) = Assumed, (2) = Actual

Coordinate System: **Coordinate Zone:** **Coordinate Proj. Factor:**
Coordinate Datum: **Coordinate Units:** U.S. Survey Feet

* Persons using this information are cautioned that the materials shown are determined by the equipment noted and accuracy of the "log of materials" is limited thereby and by judgement of the operator. THIS INFORMATION IS FOR DESIGN PURPOSES ONLY.

(Continued Next Page)

LETTER BOREHOLE - MODOT_20151118.GDT - 1/31/25 08:59 - G:\PROJECT FILES\2024\MG24029 I-270 GAP FROM ROUTE 367 TO LILAC AVENUE\FIELD DATA\BELLEFONTAINE RDI\I-270_BELLEFONTAINE DECEMBER MODOT LOGS.GPJ

STATE OF MISSOURI
RYAN DAVID SHAW
NUMBER PE-2017000368
PROFESSIONAL ENGINEER
THIS SHEET HAS BEEN SIGNED, SEALED AND DATED ELECTRONICALLY

DATE PREPARED 4/2/2026
ROUTE I-270 | STATE MO
DISTRICT BR | SHEET NO. 50
COUNTY ST. LOUIS
JOB NO. JSL0021
CONTRACT ID.
PROJECT NO.
BRIDGE NO. A9493

DESCRIPTION | DATE

MISSOURI HIGHWAYS AND TRANSPORTATION COMMISSION
105 WEST CAPITOL
JEFFERSON CITY, MO 65102
1-888-ASK-MODOT (1-888-275-6636)

HDR Engineering, Inc.
1001 Highlands Plaza Drive
Suite 200
St. Louis, MO 63110
314-425-8300
Certificate of Authority: 000856

BORING DATA

Note: For location of borings, see Sheet No. 1.

Detailed September 2025
Checked September 2025

Note: This drawing is not to scale. Follow dimensions.

c:\pwworking\central01\d4975499\B_A9493_050_SL0021.dgn 9:31:27 AM 4/2/2026

Missouri Department of Transportation
Construction and Materials

BORING NO. AB-2
Page 2 of 3

Job No.: MG24029 **County:** St. Louis **Route:** Bellefontaine
Design: **Skew:** **Location:** St. Louis County
Bent: **Logged By:** J. Stauffer **Operator:** S. Conrad
Station: **Northing:** 1069227.724 **Date of Work:** 12/11/24-12/13/24
Offset: **Easting:** 899918.006 **Depth to Water:** 32.0
Elevation: 497.0 **Requested Northing:** **Depth Hole Open:**
Requested Station: **Requested Easting:** **Time Change:**
Requested Offset: **Equipment:** CME 55LC ,Split-Spoon Sampler, Shelby Tube, NQ
Requested Elevation: **Location Note:**
Drill No.: UES **Hammer Efficiency:** 79% **Drilling Method:** Hollow Stem Auger

Depth (ft)	Graphic	Description	Elevation (ft)	Sample Type	REC % (RQD %)	Blow Counts (N_{60})	Shear Data	Field Tests	Incex Tests
30		27.0-32.0' Grey, lean CLAY (CL) *(continued)*	465						
		32.0-62.0' Brown and grey, fat CLAY (CH), trace sand							
35					100	2-4-3 (9)		PP = 1.25 tsf	MC = 22.2%
			460						
40					100	4-4-3 (9)		PP = 0.75 tsf	MC = 21.1%
			455						
45					100	4-5-6 (14)		PP = 2.00 tsf	MC = 21.1%
			450						
50					100	6-8-7 (20)		PP = 1.25 tsf	MC = 21.5%
			445						
55					100	6-7-8 (20)		PP = 1.00 tsf	MC = 21.5%
			440						
60					100	8-10-39 (65)		PP = 3.25 tsf	MC = 17.6%

N_{60} = (Em/60)Nm N_{60} - Corrected N value for standard 60% SPT efficiency; Em - Measured hammer efficiency in percent; Nm - Observed N-value; (1) = Assumed, (2) = Actual

Coordinate System: **Coordinate Zone:** **Coordinate Proj. Factor:**
Coordinate Datum: **Coordinate Units:** U.S. Survey Feet

* Persons using this information are cautioned that the materials shown are determined by the equipment noted and accuracy of the "log of materials" is limited thereby and by judgement of the operator. THIS INFORMATICN IS FOR DESIGN PURPOSES ONLY.

(Continued Next Page)

Missouri Department of Transportation
Construction and Materials

BORING NO. AB-2
Page 3 of 3

Job No.: MG24029 **County:** St. Louis **Route:** Bellefontaine
Design: **Skew:** **Location:** St. Louis County
Bent: **Logged By:** J. Stauffer **Operator:** S. Conrad
Station: **Northing:** 1069227.724 **Date of Work:** 12/11/24-12/13/24
Offset: **Easting:** 899918.006 **Depth to Water:** 32.0
Elevation: 497.0 **Requested Northing:** **Depth Hole Open:**
Requested Station: **Requested Easting:** **Time Change:**
Requested Offset: **Equipment:** CME 55LC ,Split-Spoon Sampler, Shelby Tube, NQ
Requested Elevation: **Location Note:**
Drill No.: UES **Hammer Efficiency:** 79% **Drilling Method:** Hollow Stem Auger

Depth (ft)	Graphic	Description	Elevation (ft)	Sample Type	REC % (RQD %)	Blow Counts (N_{60})	Shear Data	Field Tests	Incex Tests
60		32.0-62.0' Brown and grey, fat CLAY (CH), trace sand *(continued)*	435						
		62.0-65.0' Grey, highly weathered SHALE							
65					100	50/0.4'		PP = 3.50 tsf	MC = 14.7%
		65.0-68.0' Grey, SHALE, soft, moderately to highly weathered, very finely grained 65.1' - 16" Core Loss (65.0-66.33 ft.)	430		73 (22)				
70		68.0-69.5' Black, COAL, brittle							
		69.5-72.1' Grey, SHALE, soft, moderately to highly weathered, very finely grained	425		38 (22)				
75		72.1-75.0' - 35" Core Loss (72.08-75.0 ft.)							
		Refusal at 64.0 feet. Bottom of borehole at 75.0 feet.							

N_{60} = (Em/60)Nm N_{60} - Corrected N value for standard 60% SPT efficiency; Em - Measured hammer efficiency in percent; Nm - Observed N-value; (1) = Assumed, (2) = Actual

Coordinate System: **Coordinate Zone:** **Coordinate Proj. Factor:**
Coordinate Datum: **Coordinate Units:** U.S. Survey Feet

* Persons using this information are cautioned that the materials shown are determined by the equipment noted and accuracy of the "log of materials" is limited thereby and by judgement of the operator. THIS INFORMATION IS FOR DESIGN PURPOSES ONLY.

LETTER BOREHOLE - MODOT_20151118.GDT - 1/31/25 08:59 - G:\PROJECT FILES\2024\MG24029 I-270 GAP FROM ROUTE 367 TO LILAC AVENUE\FIELD DATA\BELLEFONTAINE RDI\-270_BELLEFONTAINE DECEMBER MODOT LOGS.GPJ

BORING DATA

Note: For location of borings, see Sheet No. 1.

Detailed September 2025
Checked September 2025

Note: This drawing is not to scale. Follow dimensions.

Sheet No. 51 of 51

c:\pwworking\central01\d4975499\B_A9493_051_SL0021.dgn 9:32:47 AM 4/2/2026

RYAN DAVID SHAW
ILLINOIS PE-2017000368
PROFESSIONAL ENGINEER
STATE OF MISSOURI
THIS SHEET HAS BEEN SIGNED, SEALED AND DATED ELECTRONICALLY

DATE PREPARED 4/2/2026
ROUTE I-270 | STATE MO
DISTRICT BR | SHEET NO. 51
COUNTY ST. LOUIS
JOB NO. JSL0021
CONTRACT ID.
PROJECT NO.
BRIDGE NO. A9493

DESCRIPTION
DATE

MISSOURI HIGHWAYS AND TRANSPORTATION COMMISSION
105 WEST CAPITOL
JEFFERSON CITY, MO 65102
1-888-ASK-MODOT (1-888-275-6636)

HDR Engineering, Inc.
1001 Highlands Plaza Drive
Suite 200
St. Louis, MO 63110
314-425-8300
Certificate of Authority: 000856

SEC/SUR 34 TWP 47N RGE 7E

(52'-93.5'-42') PRESTRESSED CONCRETE NU-GIRDER SPANS

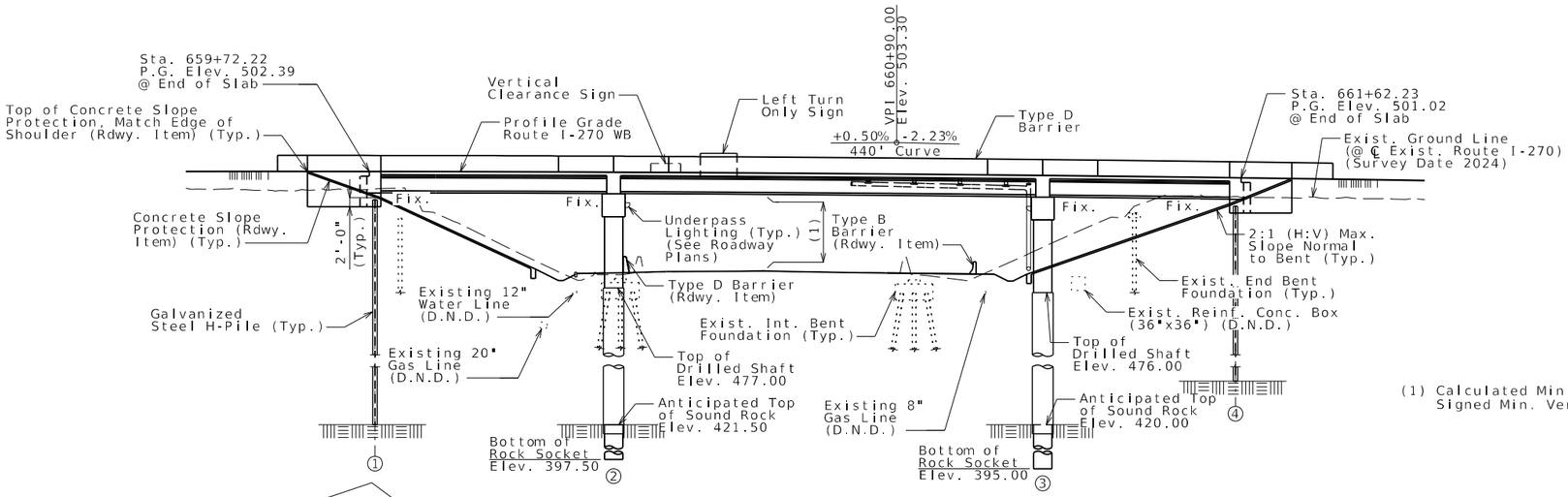

GENERAL ELEVATION

(1) Calculated Min. Vertical Clr. = 16'-1"
Signed Min. Vertical Clr. = 15'-11"

All bents are parallel.

All dimensions are horizontal.

For General Notes, Estimated Quantities, Estimated Quantities for Slab on Concrete NU-Girder and Location Sketch, see Sheet No. 2.

For Foundation Data, see Sheet No. 3.

For Substructure Layout, see Sheet No. 7.

Indicates location of borings.

Notice and Disclaimer Regarding Boring Log Data

The locations of all subsurface borings for this structure are shown on the plan sheet for this structure. The boring data for all locations indicated, as well as any other boring logs or other factual records of subsurface data and investigations performed by the department for the design of the project, are shown on Sheets No. 44 thru 52 and may be included in the Electronic Bridge Deliverables. They will also be available from the Project Contact upon written request. No greater significance or weight should be given to the boring data depicted on the plan sheets than is given to the subsurface data available from the district or elsewhere.

The Commission does not represent or warrant that any such boring data accurately depicts the conditions to be encountered in constructing this project. A contractor assumes all risks it may encounter in basing its bid prices, time or schedule of performance on the boring data depicted here or those available from the district, or on any other documentation not expressly warranted, which the contractor may obtain from the Commission.

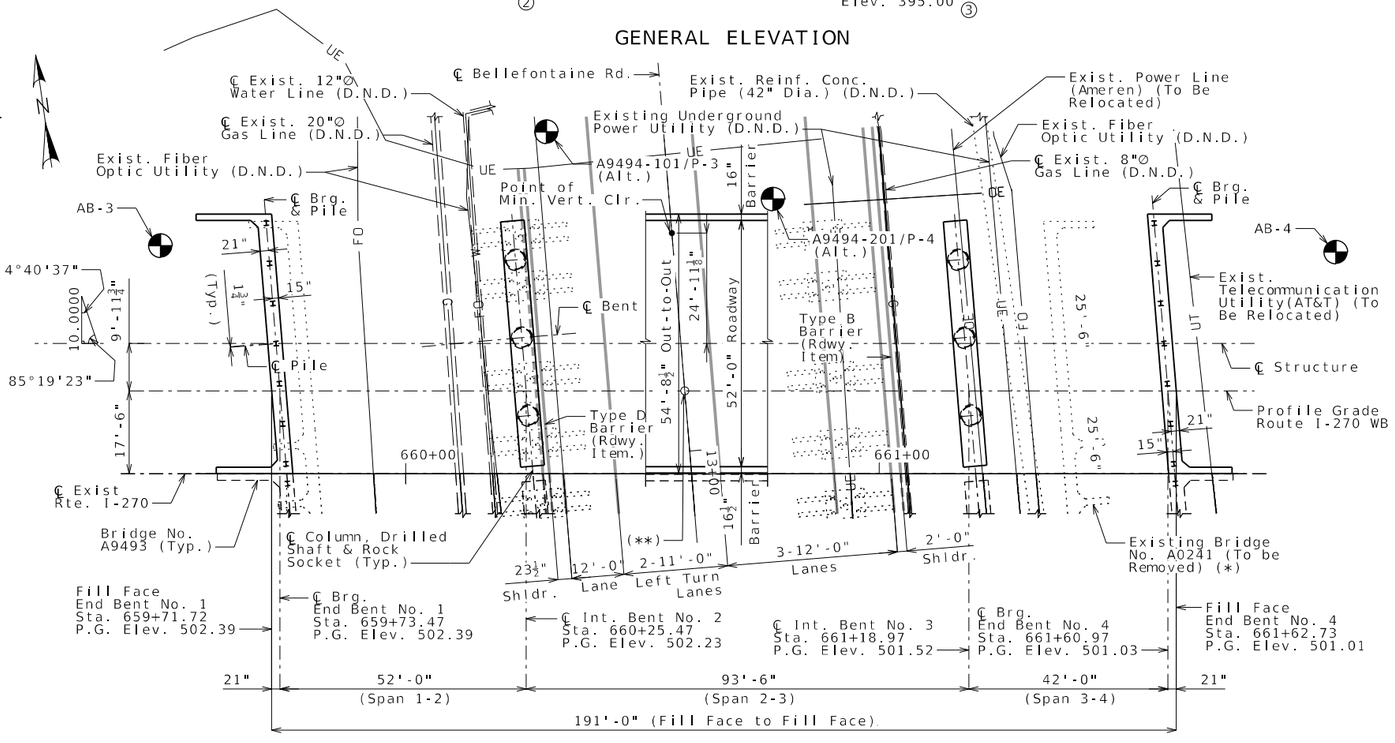

PLAN

(**) Tie Station
Sta. 660+58.96 P.G.L. Route I-270 WB =
Station 12+87.24 ℄ Bellefontaine Rd.

(*) To facilitate the installation of the proposed intermediate bent foundations for Bridges No. A9493 & A9494 the contractor may be required to partially remove existing footing concrete. Cost of any partial removal is considered incidental to Removal of Bridges (A0241), paid for under Bridge No. A9493.

BM #3 - CUT SQUARE ON SOUTH SIDE OF CONC TRAFFIC SIGNAL BASE; NORTH OF ROUTE I-270, ALSO BEING ON WEST SIDE OF BELLEFONTAINE RD AND SOUTH OF DUNN RD
ELEV = 483.10
NAVD-88

BM #4 - CUT SQUARE ON WEST SIDE OF CONC TRAFFIC SIGNAL BASE; SOUTH OF ROUTE I-270, ON EAST SIDE BELLEFONTAINE RD ALSO BEING JUST NORTH OF ON RAMP TO ROUTE I-270 EASTBOUND
ELEV = 483.00
NAVD-88

Utility Pothole Information

		20"∅ Gas Line	12"∅ Water Line	8"∅ Gas Line
Point No. 1 (Near Bridge No. A9493)	Station	660+18.87	660+24.51	661+14.48
	Offset ℄ Exist. Rte. I-270 (ft.)	106.62 Rt.	82.19 Rt.	108.43 Rt.
	Ground Elev. (ft.)	480.42, 480.52	479.69	479.55, 479.42
	Top of Utility Line Elev. (ft.)	464.77	474.27	476.32
Point No. 2 (Near Bridge No. A9494)	Station	660+04.48	660+14.53	661+00.22
	Offset ℄ Exist. Rte. I-270 (ft.)	98.39 Lt.	57.29 Lt.	72.16 Lt.
	Ground Elev. (ft.)	481.14, 480.94	479.18	480.06
	Top of Utility Line Elev. (ft.)	474.21	476.69	477.09

BRIDGE: ROUTE I-270 WB OVER BELLEFONTAINE ROAD

ROUTE I-270 WB FROM ROUTE 367 TO ROUTE H
ABOUT 1.0 MILE EAST OF ROUTE 367
BEGINNING STATION 659+71.72 (PROFILE GRADE ROUTE I-270 WB)

Designed September 2025
Detailed September 2025
Checked September 2025

Note: This drawing is not to scale. Follow dimensions.

RYAN DAVID SHAW NUMBER PE-2017000368 STATE OF MISSOURI PROFESSIONAL ENGINEER
THIS SHEET HAS BEEN SIGNED, SEALED AND DATED ELECTRONICALLY

DATE PREPARED 4/2/2026
ROUTE I-270 | STATE MO
DISTRICT BR | SHEET NO. 1
COUNTY ST. LOUIS
JOB NO. JSL0021
CONTRACT ID.
PROJECT NO.
BRIDGE NO. A9494

DESCRIPTION | DATE

MISSOURI HIGHWAYS AND TRANSPORTATION COMMISSION
105 WEST CAPITOL
JEFFERSON CITY, MO 65102
1-888-ASK-MODOT (1-888-275-6636)

HDR Engineering, Inc.
1001 Highlands Plaza Drive
Suite 200
St. Louis, MO 63110
314-425-8300
Certificate of Authority: 000856

Estimated Quantities

Item		Substr.	Superstr.	Total
Class 1 Excavation	cu. yard	85		85
Bridge Approach Slab (Major)	sq. yard		239	239
Drilled Shafts (4 ft. 6 in. Dia.)	linear foot	334.5		334.5
Rock Sockets (4 ft. 0 in. Dia.)	linear foot	147		147
Video Camera Inspection	each	6		6
Foundation Inspection Holes	linear foot	207		207
Sonic Logging Testing	each	6		6
Galvanized Structural Steel Piles (12 in.)	linear foot	966		966
Pile Point Reinforcement	each	14		14
Class B Concrete (Substructure)	cu. yard	193.7		193.7
Type D Barrier	linear foot		405	405
Modified Type D Barrier	linear foot		41	41
Slab on Concrete NU-Girder	sq. yard		1155	1155
NU 43, Prestressed Concrete NU-Girder	linear foot		1122	1122
Reinforcing Steel (Galvanized)	pound	89,590		89,590
Conduit System on Structure	lump sum		1	1
Protective Coating - Concrete Bents and Piers (Epoxy)	lump sum	1		1
Fabricated Sign Support Brackets	lump sum		1	1
Slab Drain	each		9	9
Drainage System (On Structure)	lump sum		1	1
Vertical Drain at End Bents	each	2		2
Plain Neoprene Bearing Pad	each		12	12
Laminated Neoprene Bearing Pad	each		24	24

Cost of L4x4 ASTM A709 Grade 36 HP pile anchors and 3/4-inch diameter ASTM F3125 Grade A325 Type 1 bolts, complete in place, will be considered completely covered by the contract unit price for Galvanized Structural Steel Piles (12 in.).

All concrete above the construction joint in the end bents is included in the Estimated Quantities for Slab on Concrete NU-Girder.

All reinforcement in the end bents is included in the Estimated Quantities for Slab on Concrete NU-Girder.

All reinforcement in the intermediate bent concrete diaphragms except reinforcement embedded in the beam cap is included in the Estimated Quantities for Slab on Concrete NU-Girder.

All concrete above the intermediate beam cap is included in the Estimated Quantities for Slab on Concrete NU-Girder.

Estimated Quantities for Slab on Concrete NU-Girder

Item		Total
Class B-2 Concrete	cu. yard	385
Reinforcing Steel (Galvanized)	pound	107,090

The table of Estimated Quantities for Slab on Concrete NU-Girder represents the quantities used by the State in preparing the cost estimate for concrete slabs. The area of the concrete slab will be measured to the nearest square yard longitudinally from end of slab to end of slab and transversely from out to out of bridge slab (or with the horizontal dimensions as shown on the plan of slab). Payment for stay-in-place corrugated steel forms, conventional forms, all concrete and galvanized reinforcing steel will be considered completely covered by the contract unit price for the slab. Variations may be encountered in the estimated quantities but the variations cannot be used for an adjustment in the contract unit price.

Method of forming the slab shall be as shown on the plans and in accordance with Sec 703. All hardware for forming the slab to be left in place as a permanent part of the structure shall be coated in accordance with ASTM A123 or ASTM B633 with a thickness class SC 4 and a finish type I, II or III.

Slab shall be cast-in-place with conventional forms or stay-in-place corrugated steel forms. Precast prestressed panels will not be permitted.

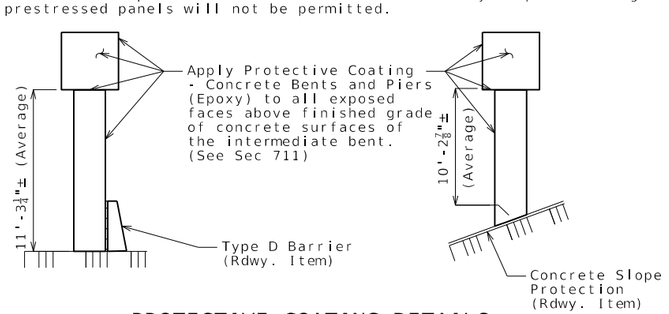

PROTECTIVE COATING DETAILS
AT INTERMEDIATE BENTS NO. 2 & 3

General Notes:

DESIGN SPECIFICATIONS:
2020 AASHTO LRFD Bridge Design Specifications (9th Ed.)
2023 AASHTO Guide Specifications for LRFD Seismic Bridge Design (3rd Ed.)
Seismic Design Category = B (Seismic Details plus Abutment Seismic Design)
Design earthquake response spectral acceleration coefficient at 1.0 second period, S_{D1} = 0.22g
Acceleration Coefficient (effective peak ground acceleration coefficient), A_s = 0.23g

DESIGN LOADING:
Vehicular = HL-93
Future Wearing Surface = 35 lb/sf
Earth = 120 lb/cf
Equivalent Fluid Pressure = 45 lb/cf (Min.)
Superstructure: Simply-Supported, Non-Composite for dead load.
Continuous Composite for live load.

DESIGN UNIT STRESSES:

Class B Concrete (Substructure)	f'c = 3,000 psi
Class B-2 Concrete (Drilled Shafts & Rock Sockets)	f'c = 4,000 psi
Class B-2 Concrete (Superstructure, except Prestressed Girders and Barrier)	f'c = 4,000 psi
Class B-1 Concrete (Barrier)	f'c = 4,000 psi
Reinforcing Steel (ASTM A706 Grade 60)	fy = 60,000 psi
Structural Steel HP Pile (ASTM A709 Grade 50)	fy = 50,000 psi

For prestressed girder stresses, see Sheets No. 20 thru 25.

NEOPRENE PADS:
Neoprene bearing pads shall be 60 durometer and shall be in accordance with Sec 716.

FABRICATED STEEL CONNECTIONS:
Field connections shall be made with ASTM F3125 Grade A325 Type 1 bolts and 13/16-inch diameter holes, except as noted.

JOINT FILLER:
All joint filler shall be in accordance with Sec 1057 for preformed sponge rubber expansion and partition joint filler, except as noted.

REINFORCING STEEL:
Minimum clearance to reinforcing steel shall be 1 1/2", unless otherwise shown.

MBS refers to mechanical bar splices. Mechanical bar splices shall be in accordance with Sec 706 or 710 except that no measurement will be made for mechanical bar splices and they will be considered completely covered by the contract unit price for other items.

GALVANIZED REINFORCING STEEL:
Specification, materials, zinc coating process and construction practice shall be in accordance with ASTM A1094/A1094M-20.

Galvanized reinforcing steel shall not come in contact with uncoated reinforcing steel. Nylon, PVC or Polyethylene spacers shall be used where necessary. Nylon cable ties shall be used to bind the spacers to the reinforcement.

RESIN ANCHORS:
The contractor shall use one of the qualified resin anchor systems in accordance with Sec 1039.

The minimum embedment depth in concrete with f'c = 4,000 psi for the resin anchor systems shall be that required to meet the minimum ultimate pullout strength in accordance with Sec 1039 but shall not be less than 5".

CONCRETE PROTECTIVE COATINGS:
Protective coating for concrete bents and piers (Epoxy) shall be applied as shown on the bridge plans and in accordance with Sec 711.

STAY-IN-PLACE CORRUGATED STEEL FORMS:
Corrugated steel forms, supports, closure elements and accessories shall be in accordance with grade requirement and coating designation G165 of ASTM A653. Complete shop drawings of the permanent steel deck forms shall be required in accordance with Sec 1080.

Corrugations of stay-in-place forms shall be filled with an expanded polystyrene material. The polystyrene material shall be placed in the forms with an adhesive in accordance with the manufacturer's recommendations.

Form sheets shall not rest directly on the top of girder flanges. Sheets shall be securely fastened to form supports with a minimum bearing length of one inch on each end. Form supports shall be placed in direct contact with the flange. Welding on or drilling holes in the girder flanges will not be permitted. All steel fabrication and construction shall in accordance with Sec 1080 and 712. Certified field welders will not be required for welding of the form supports.

The design of stay-in-place corrugated steel forms is per manufacturer which shall be in accordance with Sec 703 for false work and forms. Maximum actual weight of corrugated steel forms allowed shall be 4 psf assumed for girder loading.

TRAFFIC HANDLING:
1) Close all Route I-270 lanes on the existing EB structure (A0241).
2) Reduce Route I-270 WB & EB traffic to two lanes and shift EB traffic onto existing WB structure (A0241) utilizing a temporary crossover with barrier system.
3) Maintain two lanes of traffic in each direction on existing WB structure (A0241) while construction on Bridge No. A9493 completes (all bridge work, except for the median portion of the bridge approach slab and Modified Type D barrier).
4) Shift two lanes of EB traffic onto new EB Bridge No. A9493 and maintain two lanes of WB traffic on existing WB structure (A0241) while the remainder of the Bridge No. A9493 construction completes (median portion of bridge approach slab and Modified Type D barrier).
5) Close all Route I-270 lanes on the existing WB structure (A0241).
6) Shift Route I-270 WB & EB traffic onto new EB Bridge No. A9493. Maintain two lanes of traffic in each direction on new Bridge No. A9493 while construction of Bridge No. A9494 completes.

See roadway plans for traffic control and Sheets No. 4 thru 6 for staged construction details.

Vertical clearance for Bellefontaine Rd. traffic during construction shall be 15'-6" minimum over all through lanes of traffic.

The Contractor shall maintain a minimum of two NB thru lanes, one SB thru lane and one stacked left turn lane for traffic on Bellefontaine Rd. during construction.

MISCELLANEOUS:
High strength bolts, nuts and washers will be sampled for quality assurance as specified in Sec 106.

Outline of existing work is indicated by light dashed lines. Heavy lines indicate new work.

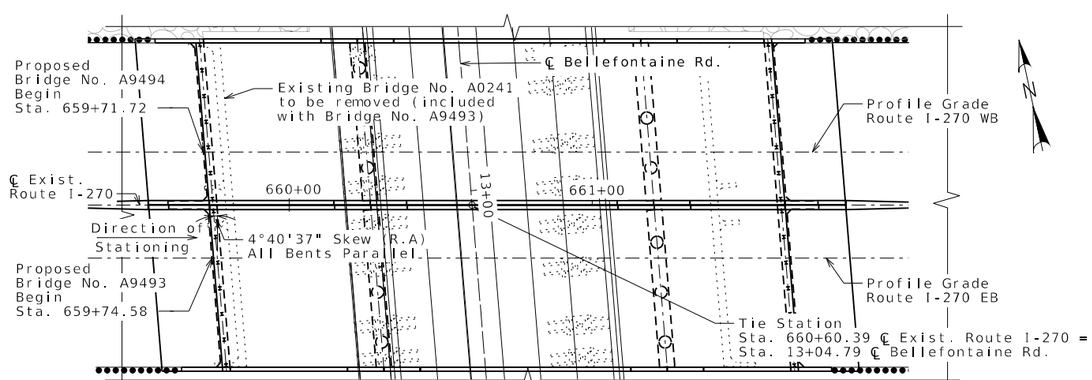

LOCATION SKETCH

STATE OF MISSOURI
RYAN DAVID SHAW
NUMBER PE-2017000368
PROFESSIONAL ENGINEER
THIS SHEET HAS BEEN SIGNED, SEALED AND DATED ELECTRONICALLY

DATE PREPARED 4/2/2026
ROUTE I-270 | STATE MO
DISTRICT BR | SHEET NO. 2
COUNTY ST. LOUIS
JOB NO. JSL0021
CONTRACT ID.
PROJECT NO.
BRIDGE NO. A9494

DESCRIPTION | DATE

MISSOURI HIGHWAYS AND TRANSPORTATION COMMISSION
105 WEST CAPITOL
JEFFERSON CITY, MO 65102
1-888-ASK-MODOT (1-888-275-6636)

HDR Engineering, Inc.
1001 Highlands Plaza Drive
Suite 200
St. Louis, MO 63110
314-425-8300
Certificate of Authority: 000856

Detailed September 2025
Checked September 2025

Note: This drawing is not to scale. Follow dimensions.

c:\pwworking\central01\d4975500\B_A9494_002_SL0021.dgn 12:31:13 PM 4/2/2026

Foundation Data

Type	Design Data		Bent Number 1	2	3	4
Load Bearing Pile	Pile Type and Size		HP 12x53			HP 12x53
	Number	ea	7			7
	Approximate Length Per Each	ft	76			62
	Pile Point Reinforcement	ea	All			All
	Min. Galvanized Penetration (Elev.)	ft	Full Length			Full Length
	Minimum Tip Penetration (Elev.)	ft	--			--
	Criteria for Min. Tip Penetration		(*)			(*)
	Pile Driving Verification Method		DF			DF
	Resistance Factor		0.4			0.4
	Minimum Nominal Axial Compressive Resistance	kip	497			439
Rock Socket	Number	ea		3	3	
	Layer 1: Foundation Material			Weak Rock	Weak Rock	
	Layer 1: Elevation Range	ft		421.5-405	420-418	
	Layer 1: Minimum Nominal Axial Compressive Resistance (Side Resistance)	ksf		2.0	2.0	
	Layer 2: Foundation Material			Weak Rock	Weak Rock	
	Layer 2: Elevation Range	ft		405-397.5	418-405	
	Layer 2: Minimum Nominal Axial Compressive Resistance (Side Resistance)	ksf		30	14.8	
	Layer 3: Foundation Material			--	Weak Rock	
	Layer 3: Elevation Range	ft		--	405-395	
	Layer 3: Minimum Nominal Axial Compressive Resistance (Side Resistance)	ksf		--	8.9	
	Minimum Nominal Axial Compressive Resistance (Tip Resistance)	ksf		215	60	

DF = FHWA-modified Gates Dynamic Pile Formula

(*) HP piles are anticipated to be driven to refusal on rock. Review all borings for depth of rock and restrict driving as appropriate to comply with hard rock driving criteria in accordance with Sec 702. When pile refusal on rock occurs, as approved by the engineer, the minimum nominal axial compressive resistance is verified and no additional pile driving verification method is required.

Load Bearing Pile:

$$\text{Minimum Nominal Axial Compressive Resistance} = \frac{\text{Maximum Factored Loads}}{\text{Resistance Factor}}$$

Rock Socket (Drilled Shafts):

$$\text{Minimum Nominal Axial Compressive Resistance (Side Resistance + Tip Resistance)} = \frac{\text{Maximum Factored Loads}}{\text{Resistance Factors}}$$

Pile point reinforcement need not be galvanized. Shop drawings will not be required for pile point reinforcement.

The contractor shall make every effort to achieve the minimum galvanized penetration (elevation) shown on the plans for all piles. Deviations in penetration less than 5 feet of the minimum will be considered acceptable provided the contractor makes the necessary corrections to ensure the minimum penetration is achieved on subsequent piles.

FOUNDATION DATA

Detailed September 2025
Checked September 2025

Note: This drawing is not to scale. Follow dimensions.

STATE OF MISSOURI
RYAN DAVID SHAW
NUMBER PE-2017000380
PROFESSIONAL ENGINEER
THIS SHEET HAS BEEN SIGNED, SEALED AND DATED ELECTRONICALLY

DATE PREPARED 4/2/2026
ROUTE I-270 | STATE MO
DISTRICT BR | SHEET NO. 3
COUNTY ST. LOUIS
JOB NO. JSL0021
CONTRACT ID.
PROJECT NO.
BRIDGE NO. A9494

DESCRIPTION | DATE

MISSOURI HIGHWAYS AND TRANSPORTATION COMMISSION
MoDOT
105 WEST CAPITOL
JEFFERSON CITY, MO 65102
1-888-ASK-MODOT (1-888-275-6636)

HDR Engineering, Inc.
1001 Highlands Plaza Drive
Suite 200
St. Louis, MO 63110
314-425-8300
Certificate of Authority: 000856

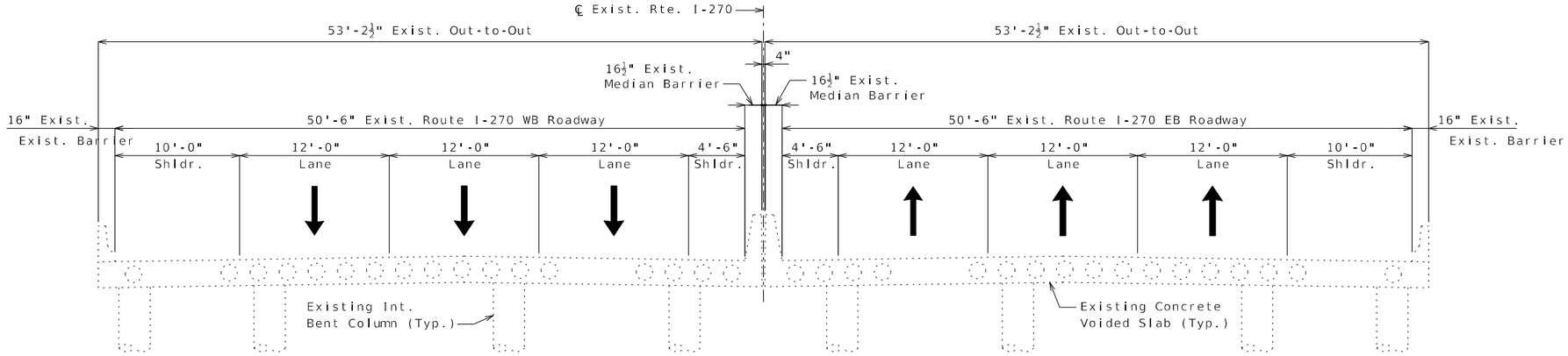

EXISTING CONFIGURATION
(Bridge No. A0241)

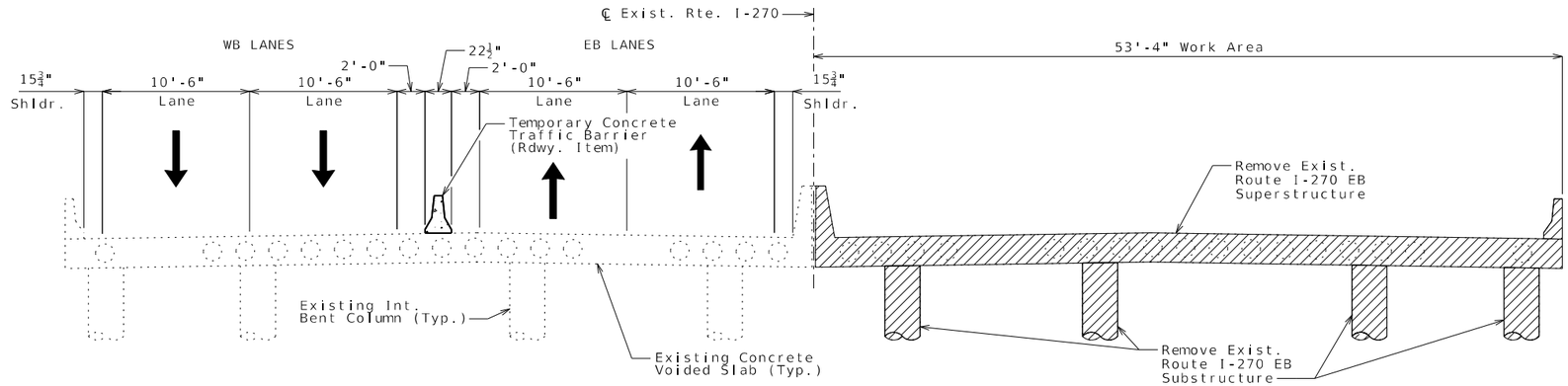

PHASE 1A REMOVAL

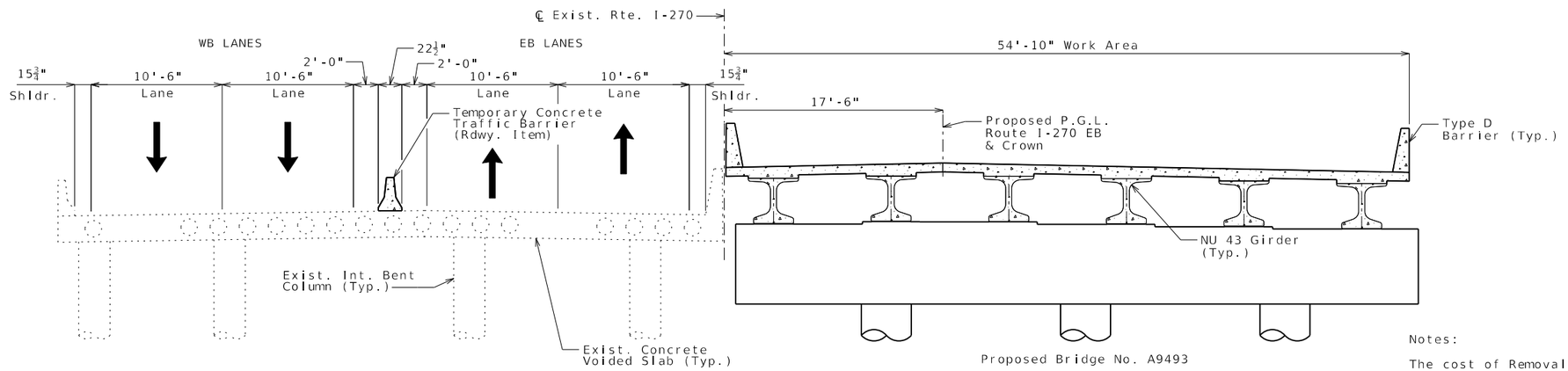

PHASE 1A CONSTRUCTION

Notes:

The cost of Removal of Bridges (A0241) shall be considered completely covered by the contract lump sum price for Removal of Bridges (A0241) for Bridge No. A9493.

Denotes Removal

STAGING PLANS

Detailed September 2025
Checked September 2025

Note: This drawing is not to scale. Follow dimensions.

STATE OF MISSOURI
RYAN DAVID SHAW
NUMBER PE-2017000380
PROFESSIONAL ENGINEER
THIS SHEET HAS BEEN SIGNED, SEALED AND DATED ELECTRONICALLY

DATE PREPARED	4/2/2026
ROUTE	I-270
STATE	MO
DISTRICT	BR
SHEET NO.	4
COUNTY	ST. LOUIS
JOB NO.	JSL0021
CONTRACT ID.	
PROJECT NO.	
BRIDGE NO.	A9494

DESCRIPTION

DATE

MISSOURI HIGHWAYS AND TRANSPORTATION COMMISSION

MoDOT

105 WEST CAPITOL
JEFFERSON CITY, MO 65102
1-888-ASK-MODOT (1-888-275-6636)

HDR Engineering, Inc.
1001 Highlands Plaza Drive
Suite 200
St. Louis, MO 63110
314-425-8300
Certificate of Authority: 000856

c:\pwworking\central01\d4975500\B_A9494_004_SL0021.dgn 12:31:27 PM 4/2/2026

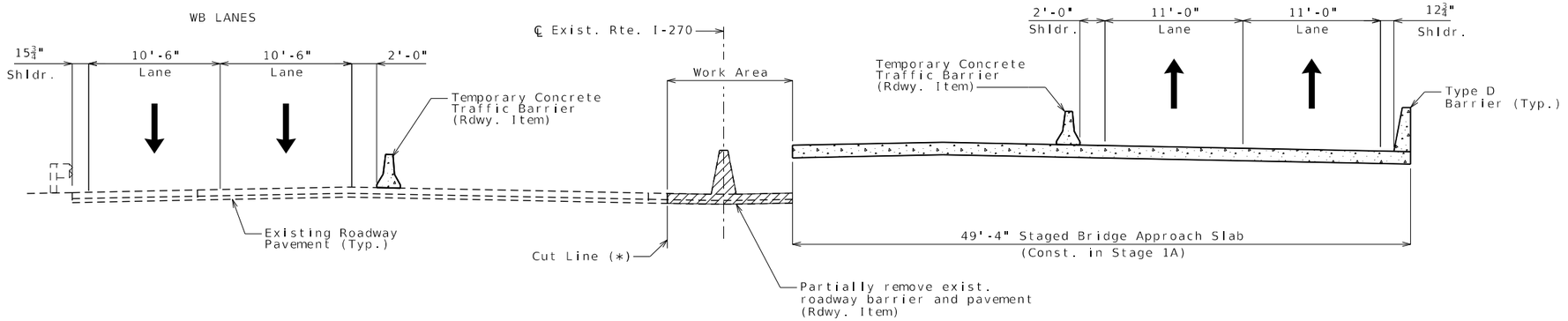

(*) Contractor is responsible for the stability of the existing bridge during partial removal. Location of the cut line to be determined by the Contractor.

PHASE 1B REMOVAL

(Shown near End Bent No. 1, End Bent No. 4 similar)

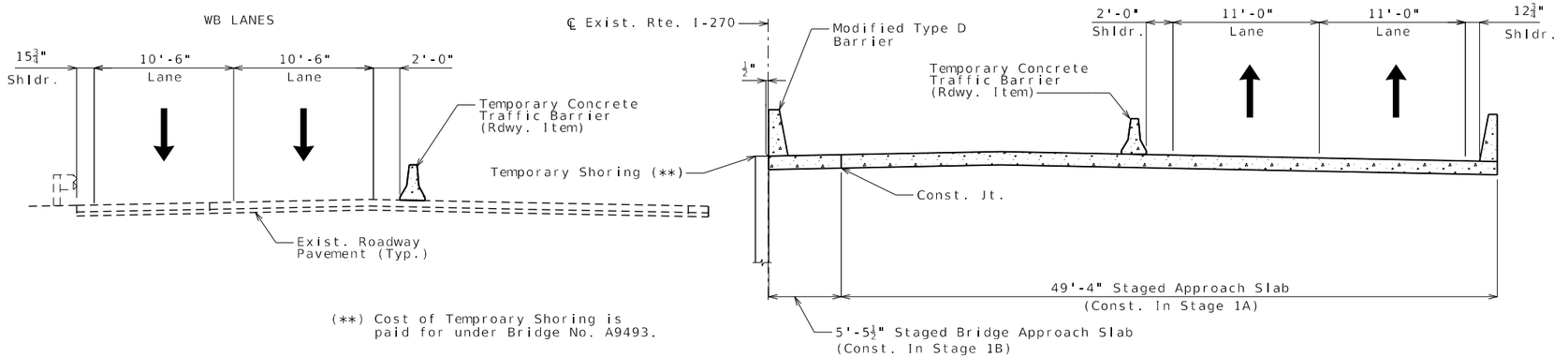

(**) Cost of Temproary Shoring is paid for under Bridge No. A9493.

PHASE 1B CONSTRUCTION

(Shown near End Bent No. 1, End Bent No. 4 similar)

Notes:

The cost of Removal of Bridges (A0241) shall be considered completely covered by the contract lump sum price for Removal of Bridges (A0241) for Bridge No. A9493.

For Approach Slab Details, see Sheet No. 38.

Denotes Removal

STAGING PLANS

Detailed September 2025
Checked September 2025

Note: This drawing is not to scale. Follow dimensions.

RYAN DAVID SHAW
NUMBER PE-2011000369
PROFESSIONAL ENGINEER
STATE OF MISSOURI
THIS SHEET HAS BEEN SIGNED, SEALED AND DATED ELECTRONICALLY

DATE PREPARED 4/2/2026
ROUTE I-270 | STATE MO
DISTRICT BR | SHEET NO. 5
COUNTY ST. LOUIS
JOB NO. JSL0021
CONTRACT ID.
PROJECT NO.
BRIDGE NO. A9494

DESCRIPTION | DATE

MISSOURI HIGHWAYS AND TRANSPORTATION COMMISSION
105 WEST CAPITOL
JEFFERSON CITY, MO 65102
1-888-ASK-MODOT (1-888-275-6636)

HDR Engineering, Inc.
1001 Highlands Plaza Drive
Suite 200
St. Louis, MO 63110
314-425-8300
Certificate of Authority: 000856

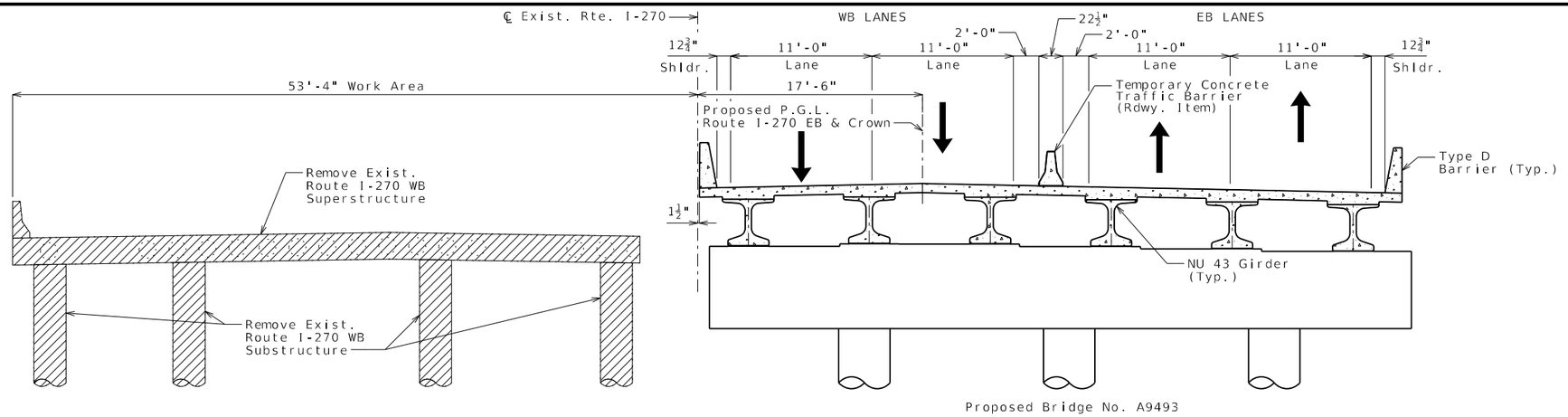

PHASE 2 REMOVAL

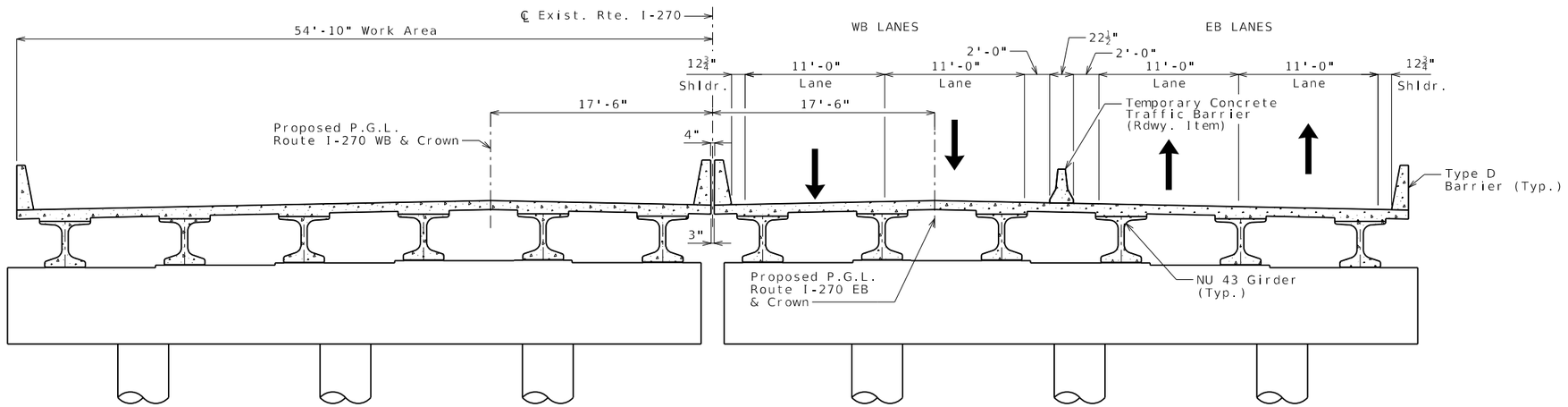

PHASE 2 CONSTRUCTION

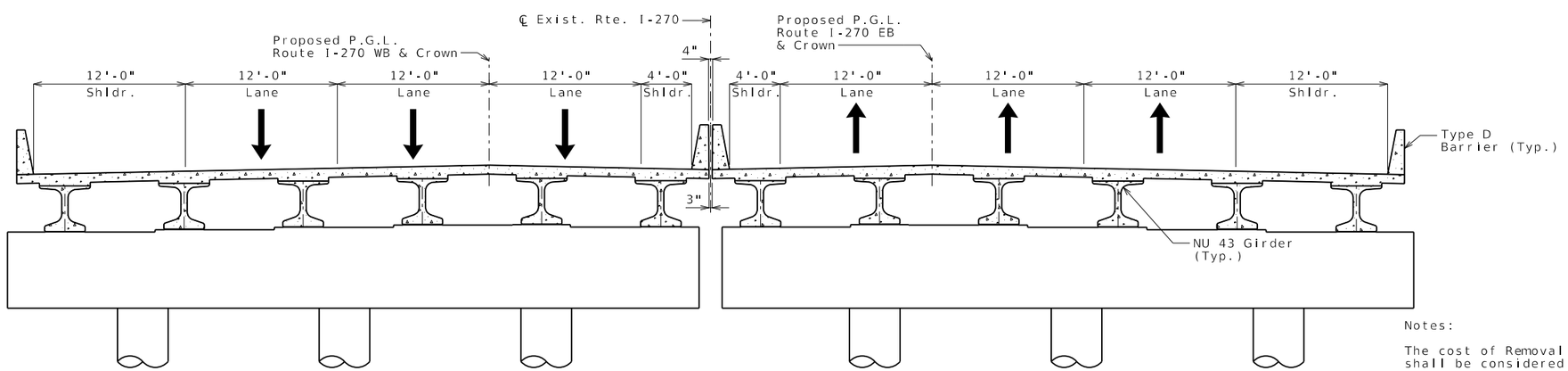

FINAL CONFIGURATION

STAGING PLANS

Notes:

The cost of Removal of Bridges (A0241) shall be considered completely covered by the contract lump sum price for Removal of Bridges (A0241) for Bridge No. A9493.

Denotes Removal

Detailed September 2025
Checked September 2025

Note: This drawing is not to scale. Follow dimensions.

STATE OF MISSOURI
RYAN DAVID SHAW
NUMBER PE-2011000369
PROFESSIONAL ENGINEER
THIS SHEET HAS BEEN SIGNED, SEALED AND DATED ELECTRONICALLY

DATE PREPARED 4/2/2026

ROUTE	STATE
I-270	MO
DISTRICT	SHEET NO.
BR	6

COUNTY: ST. LOUIS
JOB NO.: JSL0021
CONTRACT ID.:
PROJECT NO.:
BRIDGE NO.: A9494

DESCRIPTION | DATE

MISSOURI HIGHWAYS AND TRANSPORTATION COMMISSION
105 WEST CAPITOL
JEFFERSON CITY, MO 65102
1-888-ASK-MODOT (1-888-275-6636)

HDR Engineering, Inc.
1001 Highlands Plaza Drive
Suite 200
St. Louis, MO 63110
314-425-8300
Certificate of Authority: 000856

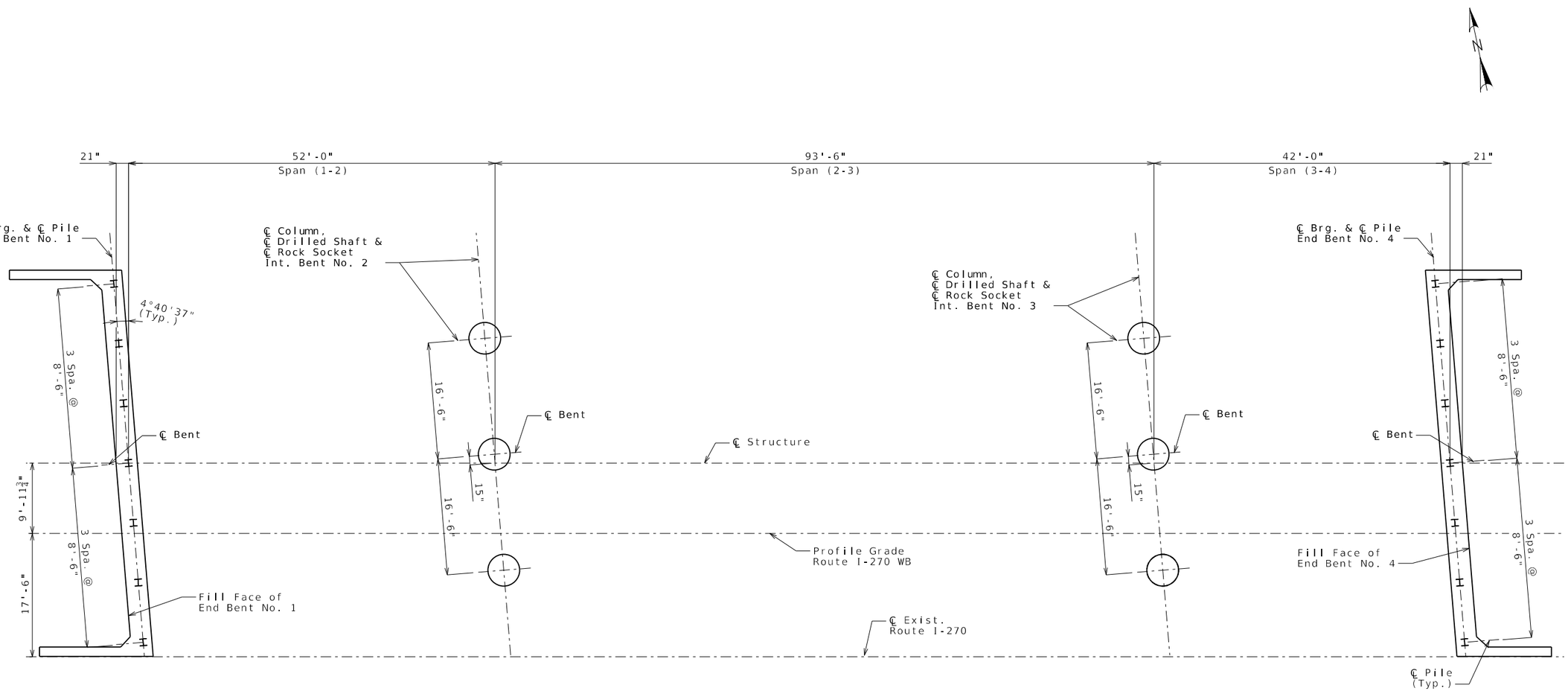

PART PLAN SHOWING FOUNDATION SPACING

Notes:

For Foundation Data, see Sheet No. 3.

For Staging Plans, see Sheets No. 4 thru 6.

For End Bent No. 1 Details, see Sheets No. 8 thru 10.

For Intermediate Bent No. 2 Details, see Sheets No. 12 & 13.

For Intermediate Bent No. 3 Details, see Sheets No. 14 & 15.

For End Bent No. 4 Details, see Sheets No. 16 thru 18.

SUBSTRUCTURE LAYOUT

Detailed September 2025
Checked September 2025

Note: This drawing is not to scale. Follow dimensions.

STATE OF MISSOURI
RYAN DAVID SHAW
NUMBER PE-2011000369
PROFESSIONAL ENGINEER
THIS SHEET HAS BEEN SIGNED, SEALED AND DATED ELECTRONICALLY

DATE PREPARED
4/2/2026

ROUTE	STATE
I-270	MO
DISTRICT	SHEET NO.
BR	7

COUNTY
ST. LOUIS

JOB NO.
JSL0021

CONTRACT ID.

PROJECT NO.

BRIDGE NO.
A9494

DESCRIPTION	DATE

MISSOURI HIGHWAYS AND TRANSPORTATION COMMISSION
105 WEST CAPITOL
JEFFERSON CITY, MO 65102
1-888-ASK-MODOT (1-888-275-6636)

HDR Engineering, Inc.
1001 Highlands Plaza Drive
Suite 200
St. Louis, MO 63110
314-425-8300
Certificate of Authority: 000856

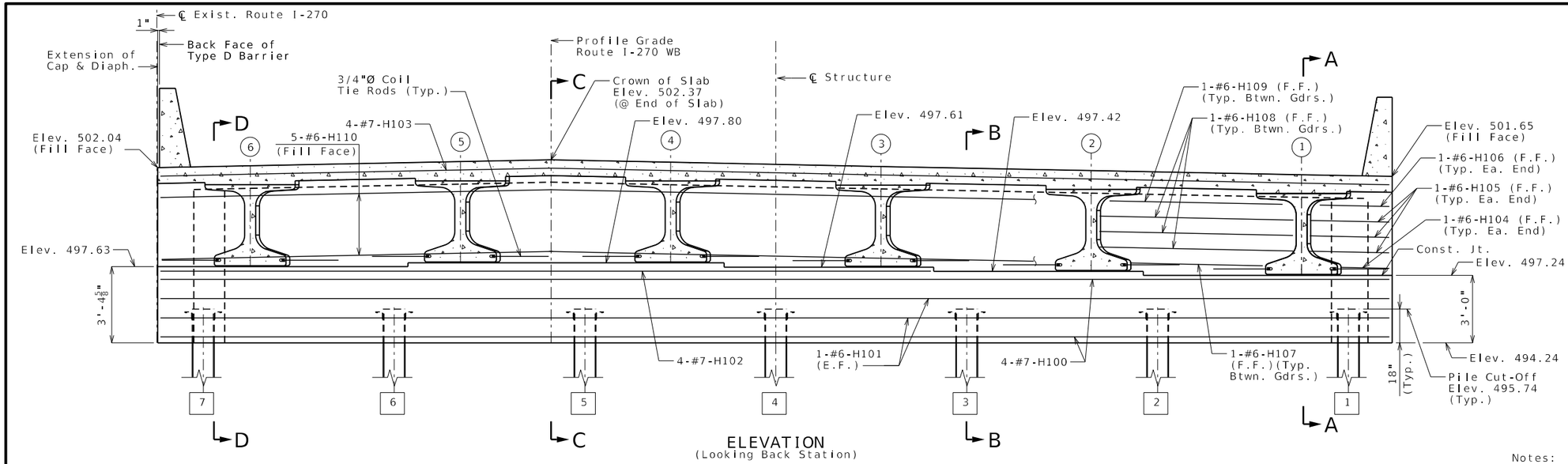

ELEVATION
(Looking Back Station)

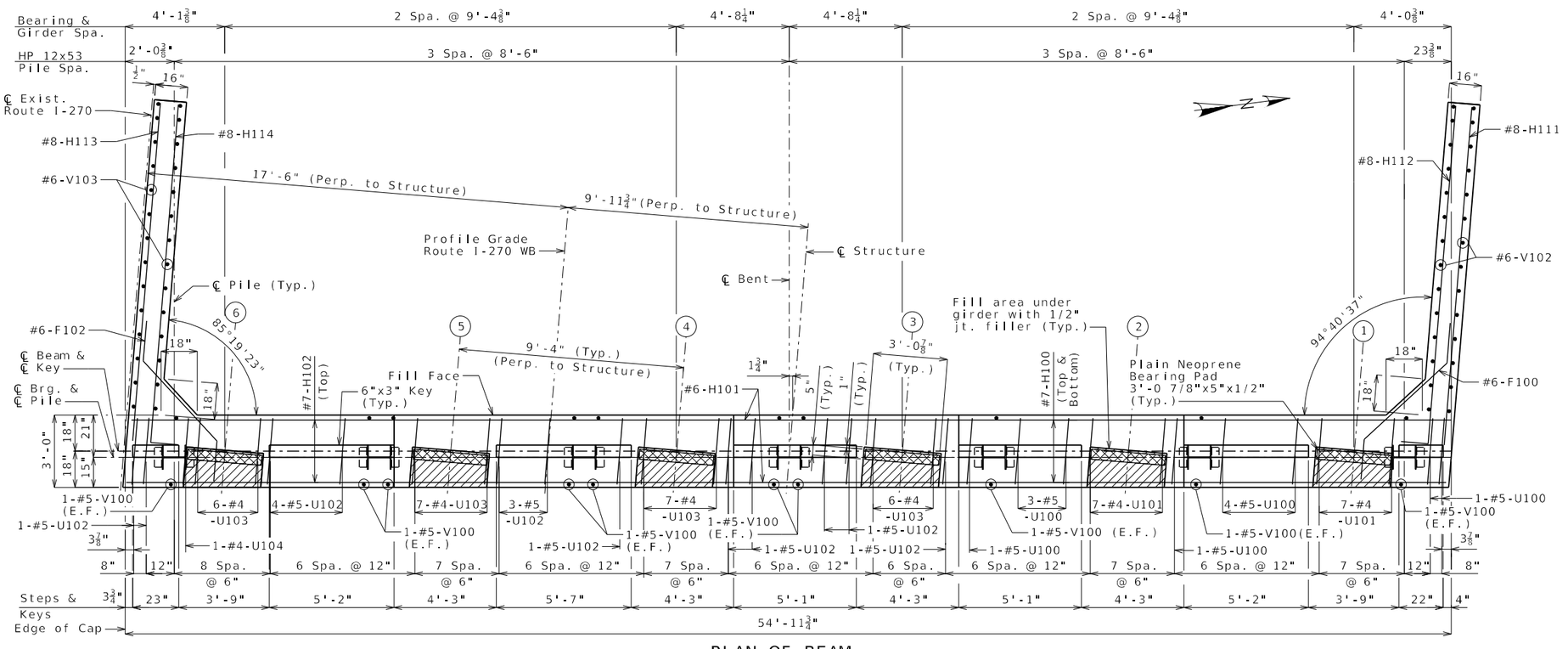

PLAN OF BEAM
(Horizontal dimensions are measured along ℄ Piles and ℄ Brg.)

Notes:

Work this sheet with Sheets No. 9 & 10.

For Sections A-A thru C-C, see Sheet No. 9.

For Section D-D, see Sheet No. 10.

For Key Details, Pile Anchor Details and Steel Pile Splice Detail, see Sheet No. 10.

For location of coil tie rods, see Sheets No. 20 & 21.

Reinforcing steel shall be shifted to clear piles. U-bars shall clear piles by at least 1 1/2 inches.

Strands at ends of girders shall be field bent or, if necessary, cut in field to maintain 1 1/2-inch minimum clearance to fill face of end bent.

All concrete in the end bent above top of beam and below top of slab shall be Class B-2.

#6-F100 and #6-F102 bars shall be bent in field to clear girders.

The U-bars, sets of V-bars,and #5-H120 bars shall be placed parallel to centerline of roadway.

For details and reinforcement of barriers at end bent, see Sheet No. 35.

E.F. Denotes Each Face.

F.F. Denotes Front Face.

(1) - Denotes girder number.

[1] - Denotes pile number.

Substructure Quantity Table for End Bent No. 1		
Item		Quantity
Class 1 Excavation	cu. yard	45
Galvanized Structural Steel Piles (12 in.)	linear foot	532
Pile Point Reinforcement	each	7
Class B Concrete (Substructure)	cu. yard	24.5

These quantities are included in the Estimated Quantities table on Sheet No. 2.

END BENT NO. 1 DETAILS

Detailed September 2025
Checked September 2025

Note: This drawing is not to scale. Follow dimensions.

Sheet No. 8 of 52

STATE OF MISSOURI
RYAN DAVID SHAW
NUMBER PE-2011000369
PROFESSIONAL ENGINEER
THIS SHEET HAS BEEN SIGNED, SEALED AND DATED ELECTRONICALLY

DATE PREPARED
4/2/2026

ROUTE	STATE
I-270	MO
DISTRICT	SHEET NO.
BR	8

COUNTY
ST. LOUIS

JOB NO.
JSL0021

CONTRACT ID.

PROJECT NO.

BRIDGE NO.
A9494

DESCRIPTION | DATE

MISSOURI HIGHWAYS AND TRANSPORTATION COMMISSION
105 WEST CAPITOL
JEFFERSON CITY, MO 65102
1-888-ASK-MODOT (1-888-275-6636)

HDR Engineering, Inc.
1001 Highlands Plaza Drive
Suite 200
St. Louis, MO 63110
314-425-8300
Certificate of Authority: 000856

c:\pwworking\central01\d4975500\B_A9494_008_SL0021.dgn 12:31:59 PM 4/2/2026

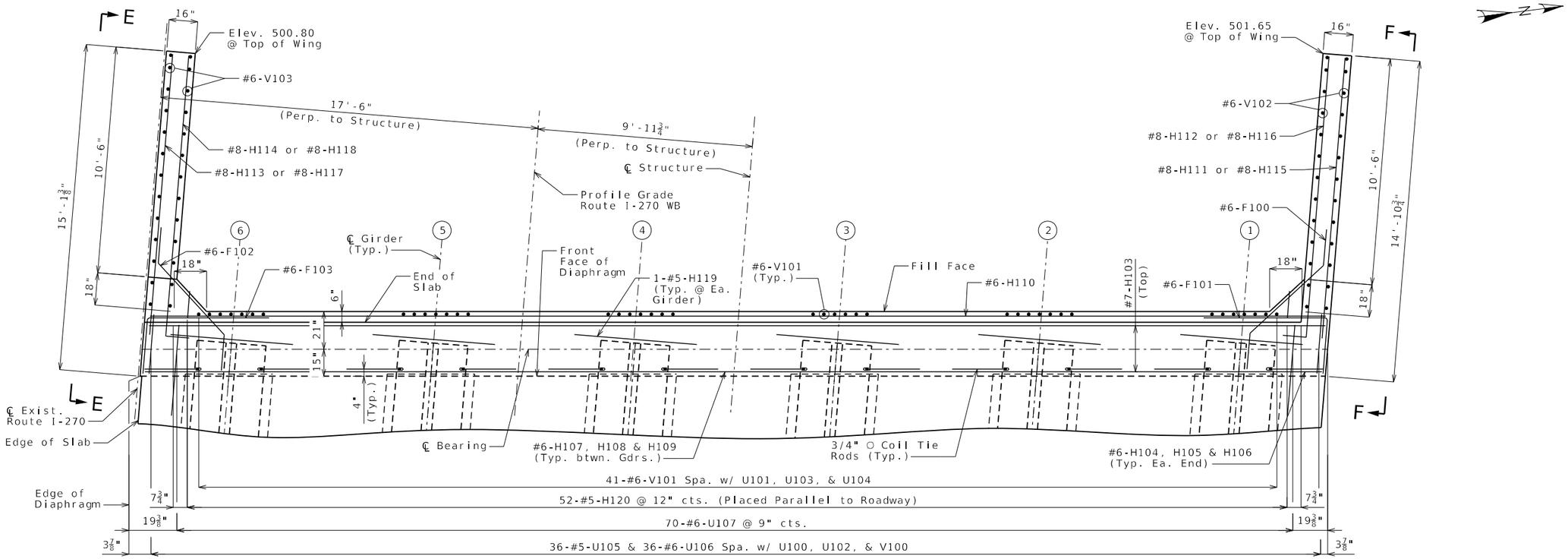

PART PLAN

(Horizontal dimensions are measured along ℄ Brg.)

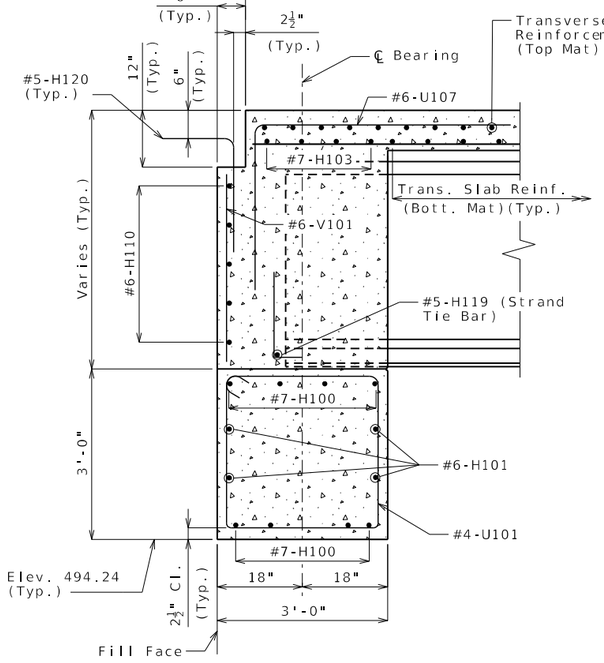

SECTION A-A

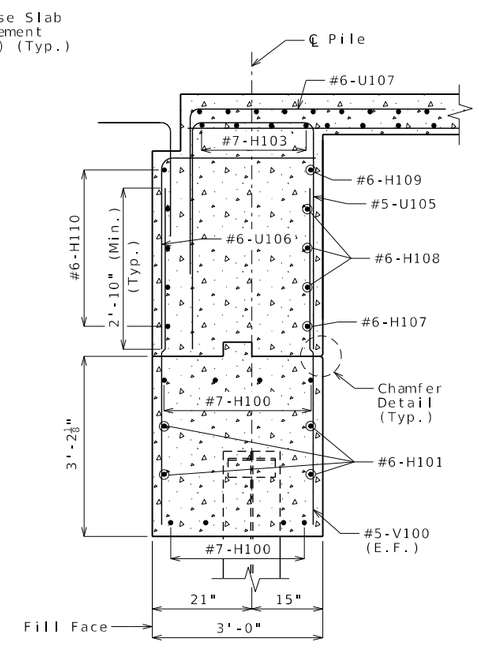

SECTION B-B

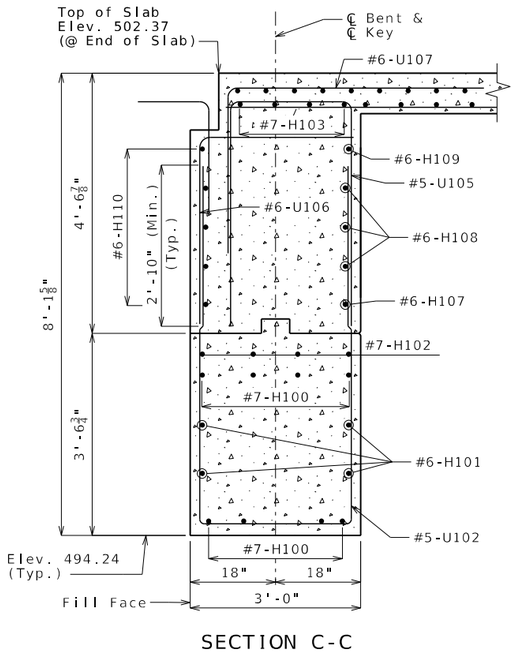

SECTION C-C

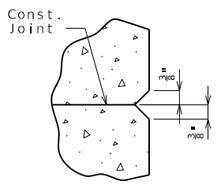

CHAMFER DETAIL

Notes:

Work this sheet with Sheets No. 8 & 10.

#6-F100 and #6-F102 bars shall be bent in the field to clear girders.

The U-bars and #5-H120 bars shall be placed parallel to centerline roadway.

For location of Sections A-A thru C-C, see Sheet No. 8.

For Section D-D, see Sheet No. 10.

For Elevations E-E and F-F, see Sheet No. 10.

For Key details, Pile Anchor details and Pile Splice details, see Sheet No. 10.

For location of coil tie rods and #5-H119 (strand tie bar), see Sheets No. 20 & 21.

For details and reinforcement of barriers at end bent, see Sheet No. 35.

E.F. Denotes Each Face.

(1) - Denotes girder number.

END BENT NO. 1 DETAILS

Detailed September 2025
Checked September 2025

Note: This drawing is not to scale. Follow dimensions.

STATE OF MISSOURI
RYAN DAVID SHAW
NUMBER PE-2011000369
PROFESSIONAL ENGINEER
THIS SHEET HAS BEEN SIGNED, SEALED AND DATED ELECTRONICALLY

DATE PREPARED
4/2/2026

ROUTE	STATE
I-270	MO
DISTRICT	SHEET NO.
BR	9

COUNTY
ST. LOUIS

JOB NO.
JSL0021

CONTRACT ID.

PROJECT NO.

BRIDGE NO.
A9494

DESCRIPTION | DATE

MISSOURI HIGHWAYS AND TRANSPORTATION COMMISSION
105 WEST CAPITOL
JEFFERSON CITY, MO 65102
1-888-ASK-MODOT (1-888-275-6636)
MoDOT

HDR Engineering, Inc.
1001 Highlands Plaza Drive
Suite 200
St. Louis, MO 63110
314-425-8300
Certificate of Authority: 000856

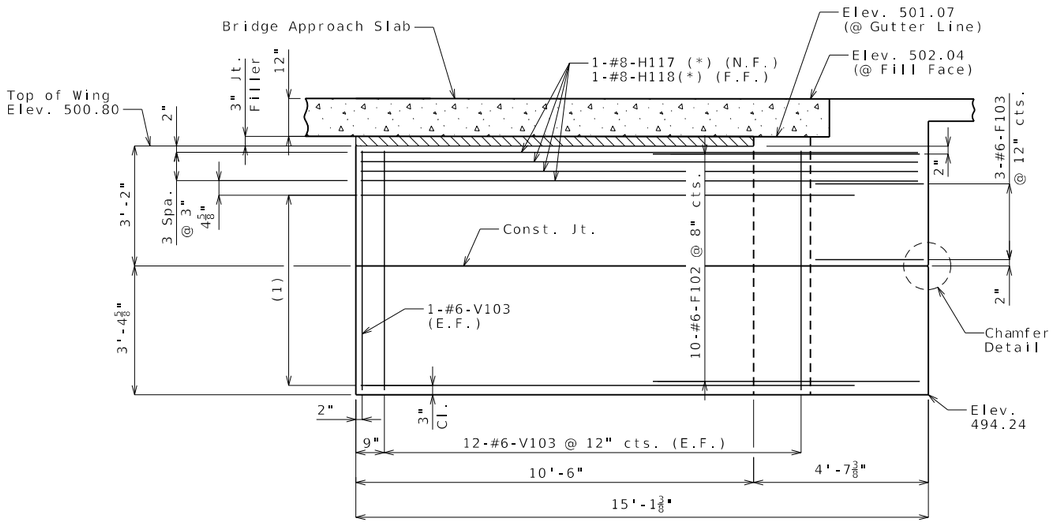

ELEVATION E-E

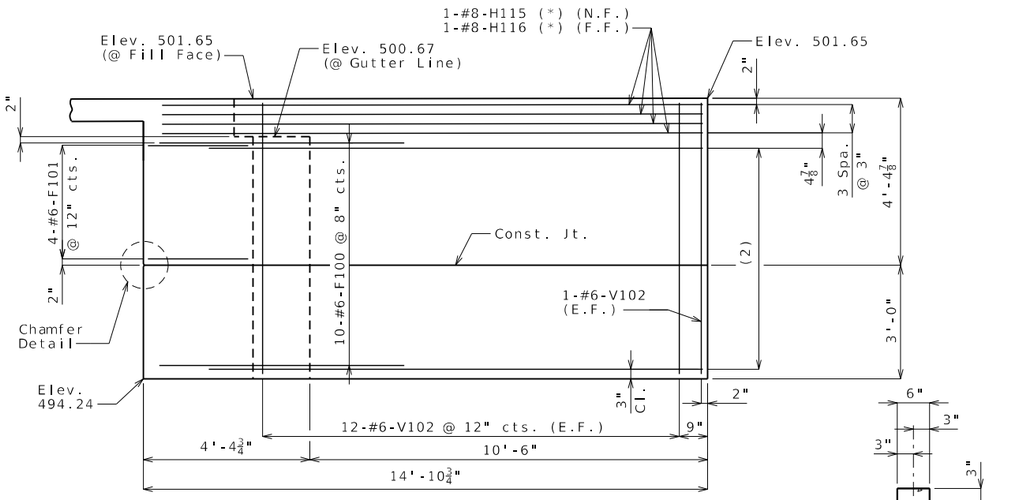

ELEVATION F-F

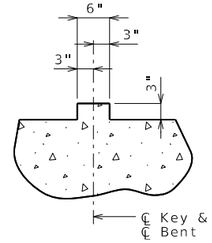

TYPICAL SECTION THRU KEY

Notes:

All dimensions and elevations given at outside face of wing unless otherwise noted.

The #6-F100 and F102 bars shall be bent in the field to clear girders.

(*) Place with grade.

(1) 11-#8-H113 N.F. @ 6" cts.
11-#8-H114 F.F. @ 6" cts.

(2) 11-#8-H111 N.F. @ 7" cts.
11-#8-H112 F.F. @ 7" cts.

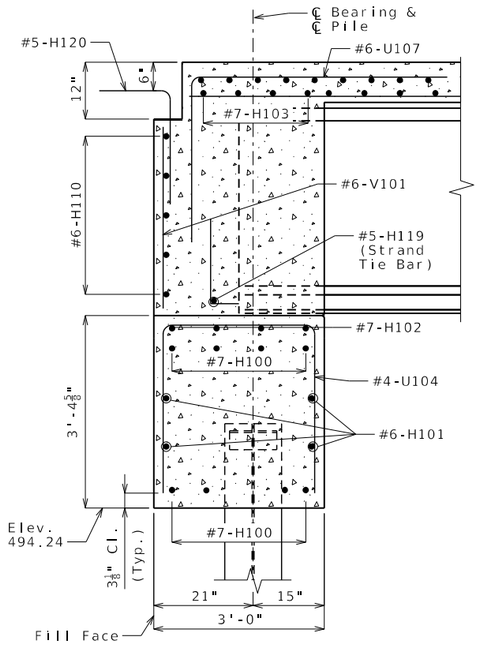

SECTION D-D

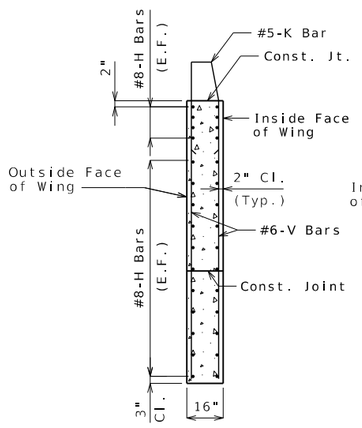

TYPICAL SECTION THRU LEFT WING

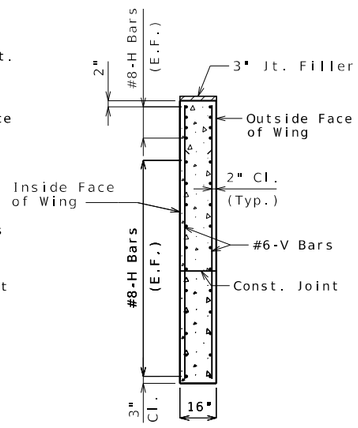

TYPICAL SECTION THRU RIGHT WING

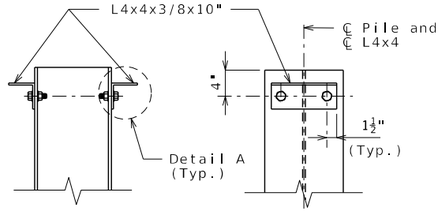

DETAILS OF HP PILE ANCHORS

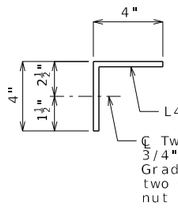

DETAIL A

Angles shall be coated with a minimum of two coats of non-aluminum epoxy mastic primer to provide a dry film thickness of 4 mils minimum, 8 mils maximum, or galvanized in accordance with Sec 1081. Bolts, washers and nuts shall be galvanized in accordance with AASHTO M 232 (ASTM A153), Class C.

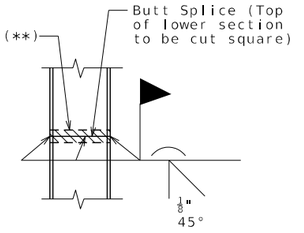

STEEL PILE SPLICE
(If required)

(**) Galvanizing material shall be omitted or removed one inch clear of weld locations in accordance with Sec 702.

Notes:

Work this sheet with Sheets No. 8 & 9.

For Chamfer Detail, see Sheet No. 9.

Seal joint between vertical faces of end bent beams and diaphragms of Bridge No. A9493 with the vertical faces of Bridge No. A9494. Preformed compression joint seal shall be in accordance with Sec 717. Payment will be considered covered by the contract unit price for other items included in the contract.

For Modified Type D Barrier (Right) At Approach Slabs, see Sheet No. 36.

For location of Section D-D, see Sheet No. 8

For location of Elevations E-E and F-F, see Sheet No. 9.

For details and reinforcement of barriers at end bent, see Sheet No. 35.

E.F. Denotes Each Face.

F.F. Denotes Far Face.

N.F. Denotes Near Face.

END BENT NO. 1 DETAILS

RYAN DAVID SHAW
NUMBER PE-2011000369
STATE OF MISSOURI
PROFESSIONAL ENGINEER
THIS SHEET HAS BEEN SIGNED, SEALED AND DATED ELECTRONICALLY

DATE PREPARED
4/2/2026

ROUTE	STATE
I-270	MO
DISTRICT	SHEET NO.
BR	10

COUNTY
ST. LOUIS

JOB NO.
JSL0021

CONTRACT ID.

PROJECT NO.

BRIDGE NO.
A9494

DESCRIPTION	DATE

MISSOURI HIGHWAYS AND TRANSPORTATION COMMISSION
105 WEST CAPITOL
JEFFERSON CITY, MO 65102
1-888-ASK-MODOT (1-888-275-6636)

HDR Engineering, Inc.
1001 Highlands Plaza Drive
Suite 200
St. Louis, MO 63110
314-425-8300
Certificate of Authority: 000856

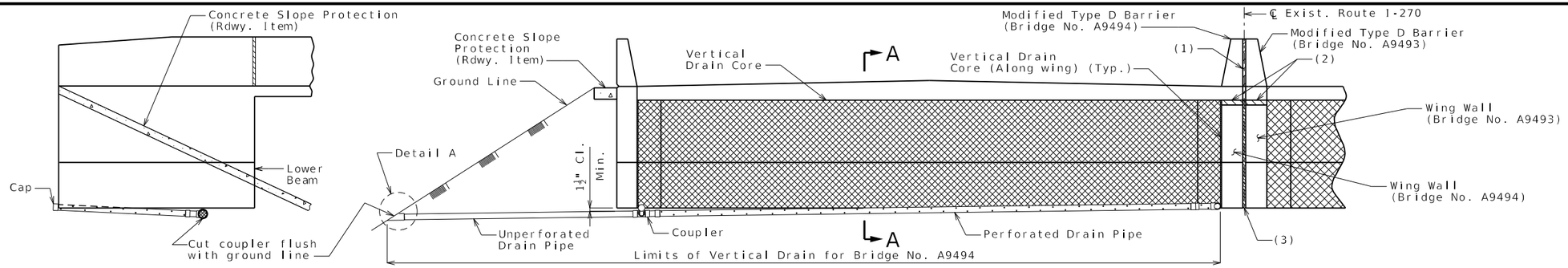

ELEVATION OF EXTERIOR WING

ELEVATION OF END BENT
(Looking Ahead Station)

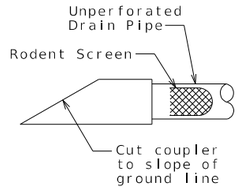

DETAIL A

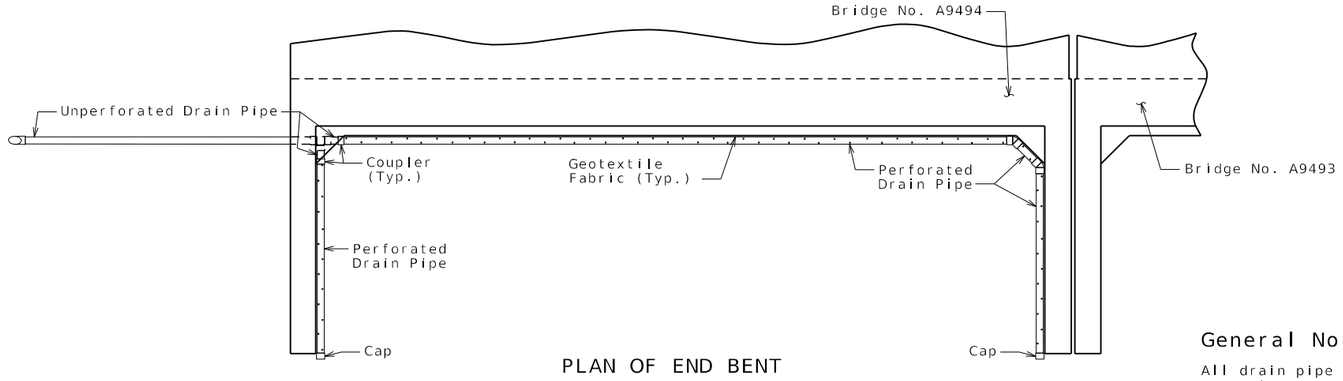

PLAN OF END BENT

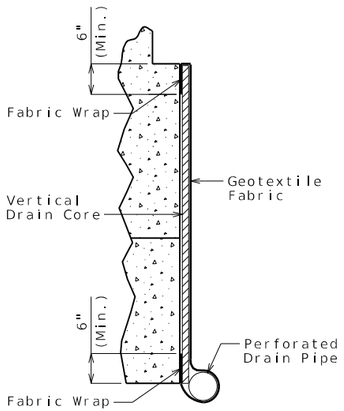

PART SECTION A-A
(Section thru wing similar)

(1) Place joint filler (varying thickness) between Bridges No. A9493 and A9494 Modified Type D Barriers.

(2) 3" joint filler between top of wing wall and bottom of bridge approach slab.

(3) 1" joint filler between Bridges No. A9493 and A9494 wing walls.

General Notes:

All drain pipe shall be sloped 1 to 2 percent.

Drain pipe may be either 6-inch diameter corrugated metallic-coated steel pipe underdrain, 4-inch diameter corrugated polyvinyl chloride (PVC) drain pipe, or 4-inch diameter corrugated polyethylene (PE) drain pipe.

Drain pipe shall be placed at fill face of end bent and inside face of wings. The pipe shall slope to lowest grade of ground line, also missing the lower beam of end bent by a minimum of 1 1/2 inches.

Perforated pipe shall be placed at fill face side and inside face of wings at the bottom of end bent and plain pipe shall be used where the vertical drain ends to the exit at ground line.

Seal joint between vertical faces of end bent beams and diaphragms of Bridge No. A9493 with the vertical faces of Bridge No. A9494. Preformed compression joint seal shall be in accordance with Sec 717. Payment will be considered covered by the contract unit price for other items included in the contract.

For End Bent No. 1 Details, see Sheets No. 8 thru 10.

For End Bent No. 4 Details, see Sheets No. 16 thru 18.

For Modified Type D Barrier (Right) At Approach Slabs, see Sheet No. 36.

VERTICAL DRAIN AT END BENTS

(Squared end bent shown, skewed end bent similar)

Detailed September 2025
Checked September 2025

Note: This drawing is not to scale. Follow dimensions.

STATE OF MISSOURI
RYAN DAVID SHAW
NUMBER PE-2011000369
PROFESSIONAL ENGINEER
THIS SHEET HAS BEEN SIGNED, SEALED AND DATED ELECTRONICALLY

DATE PREPARED 4/2/2026

ROUTE	STATE
I-270	MO
DISTRICT	SHEET NO.
BR	11

COUNTY: ST. LOUIS
JOB NO.: JSL0021
CONTRACT ID.:
PROJECT NO.:
BRIDGE NO.: A9494

DESCRIPTION | DATE

MISSOURI HIGHWAYS AND TRANSPORTATION COMMISSION
105 WEST CAPITOL
JEFFERSON CITY, MO 65102
1-888-ASK-MODOT (1-888-275-6636)

HDR Engineering, Inc.
1001 Highlands Plaza Drive
Suite 200
St. Louis, MO 63110
314-425-8300
Certificate of Authority: 000856

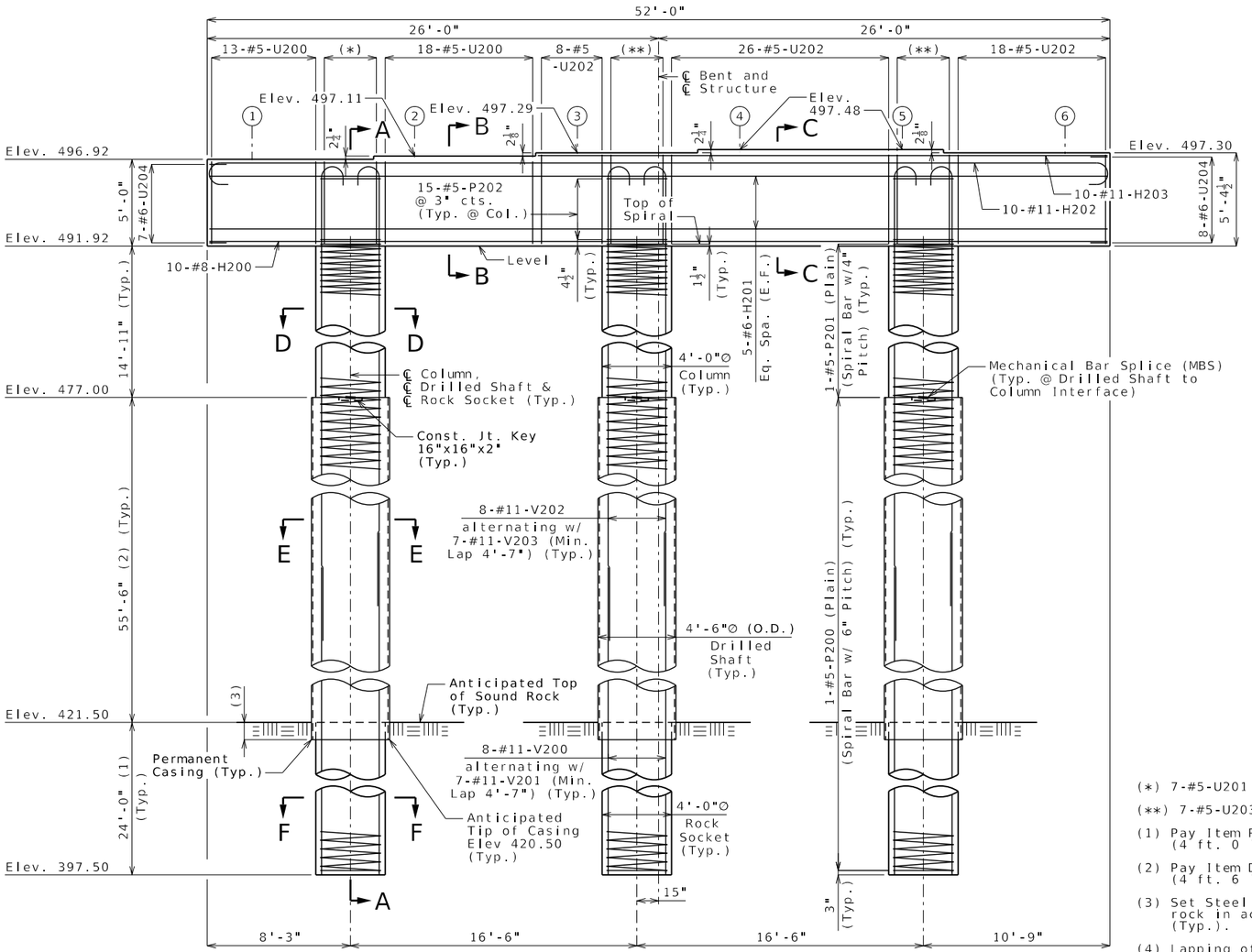

ELEVATION
(Beam keys not shown for clarity.)

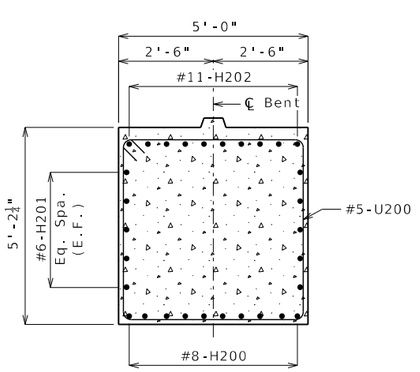

SECTION B-B

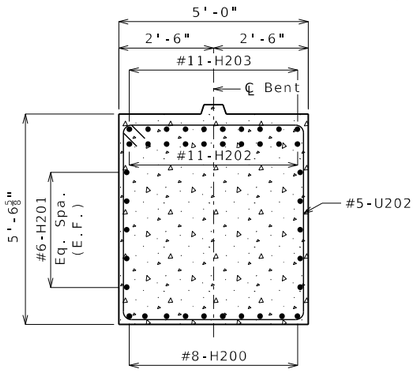

SECTION C-C

Substructure Quantity Table for Intermediate Bent No. 2		
Item		Quantity
Drilled Shafts (4 ft. 6 in. Dia.)	linear foot	166.5
Rock Sockets (4 ft. 0 in. Dia.)	linear foot	72
Video Camera Inspection	each	3
Foundation Inspection Holes	linear foot	102
Sonic Logging Testing	each	3
Class B Concrete (Substructure)	cu. yard	72.2
Reinforcing Steel (Galvanized)	pound	44,510

These quantities are included in the Estimated Quantities table on Sheet No. 2.
All reinforcement in drilled shafts and rock sockets is included in the substructure quantities.

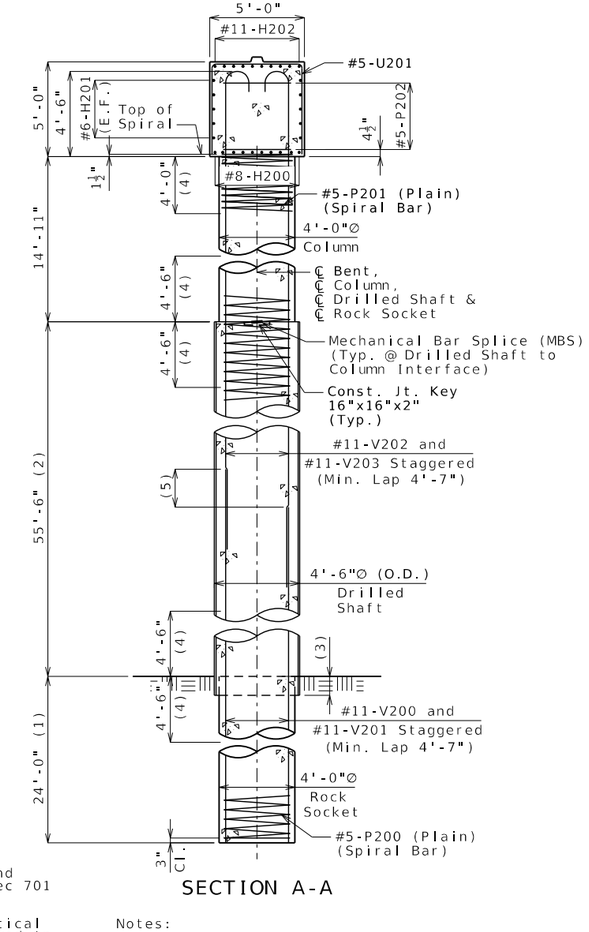

SECTION A-A

(*) 7-#5-U201

(**) 7-#5-U203

(1) Pay Item Rock Sockets (4 ft. 0 in. Dia.)

(2) Pay Item Drilled Shafts (4 ft. 6 in. Dia.)

(3) Set Steel Casing into sound rock in accordance with Sec 701 (Typ.).

(4) Lapping of spiral and vertical reinforcement is not allowed in this zone.

(5) Lap splices and mechanical bars splices, if used, are to be alternately staggered at least 2'-0" at two different locations.

Notes:

For locations and mounting details of Underpass Lighting, see Roadway plans.

The cost of any required excavation to the top of the drilled shafts will be considered completely covered by the contract unit price for other items.

The hooks of vertical bars embedded in the beam cap shall not be turned outward, away from the column core.

Work this sheet with Sheet No. 13.

Thickness of permanent steel casing shall be in accordance with Sec 701.

An additional 4 feet has been added to V-bar lengths and an additional 4 feet of height has been added to P200 and P201 length in the quantities, if required, for possible change in drilled shaft or rock socket length. The additional V-bar length shall be cut off or included in the reinforcement lap if not required. The additional P-bar length shall be cut off, with allowance for maintaining the required 1-1/2 turns at the end of spiral length. The spiral pitch shall be spaced similarly to that shown in elevation, if required, but not less than 6-inch centers in the drilled shaft and rock socket.

Sonic logging testing shall be performed on all drilled shafts and rock sockets.

E.F. Denotes Each Face.

(1) - Denotes Girder Number.

INTERMEDIATE BENT NO. 2 DETAILS

Detailed September 2025
Checked September 2025

Note: This drawing is not to scale. Follow dimensions.

STATE OF MISSOURI
RYAN DAVID SHAW
NUMBER PE-2011000269
PROFESSIONAL ENGINEER
THIS SHEET HAS BEEN SIGNED, SEALED AND DATED ELECTRONICALLY

DATE PREPARED 4/2/2026

ROUTE	STATE
I-270	MO
DISTRICT	SHEET NO.
BR	12

COUNTY: ST. LOUIS
JOB NO.: JSL0021
CONTRACT ID.:
PROJECT NO.:
BRIDGE NO.: A9494

DESCRIPTION | DATE

MISSOURI HIGHWAYS AND TRANSPORTATION COMMISSION
105 WEST CAPITOL
JEFFERSON CITY, MO 65102
1-888-ASK-MODOT (1-888-275-6636)

HDR Engineering, Inc.
1001 Highlands Plaza Drive
Suite 200
St. Louis, MO 63110
314-425-8300
Certificate of Authority: 000856

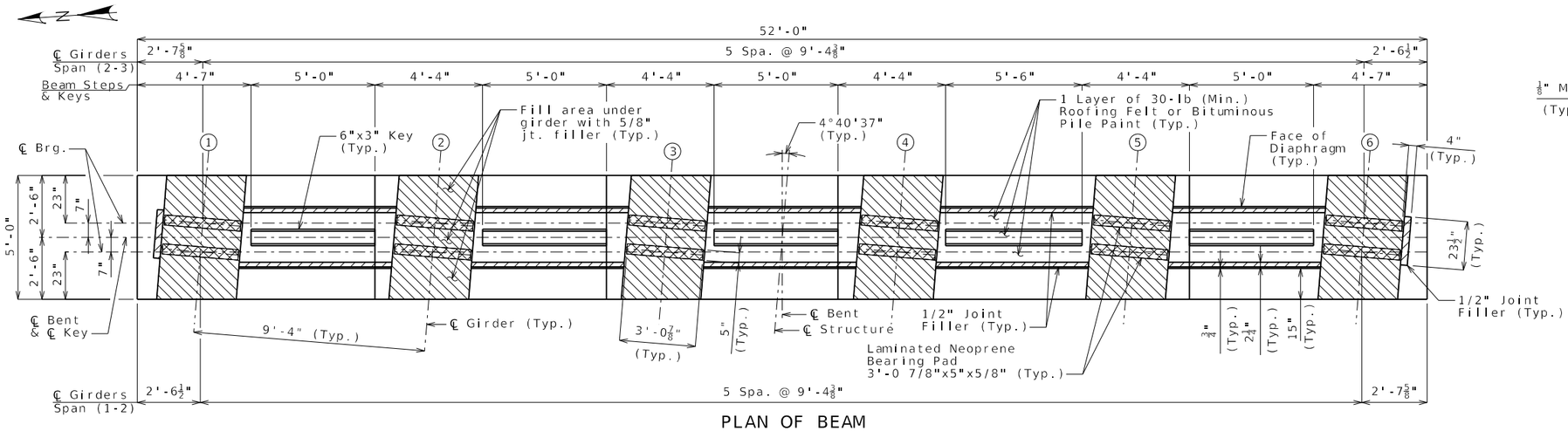

PLAN OF BEAM

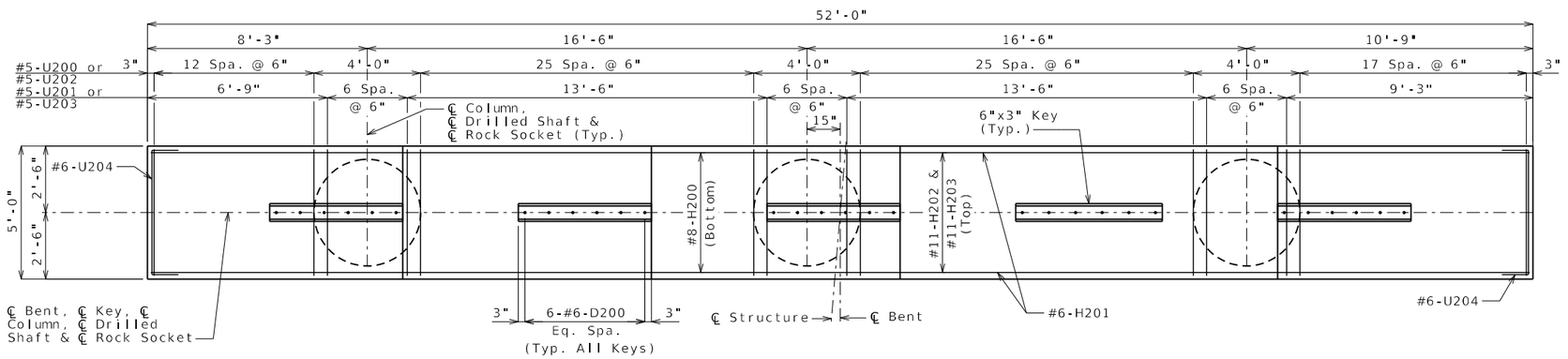

PLAN OF BEAM SHOWING REINFORCEMENT

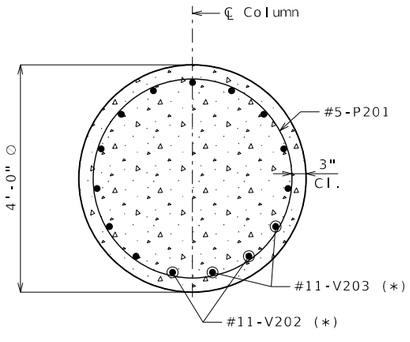

SECTION D-D

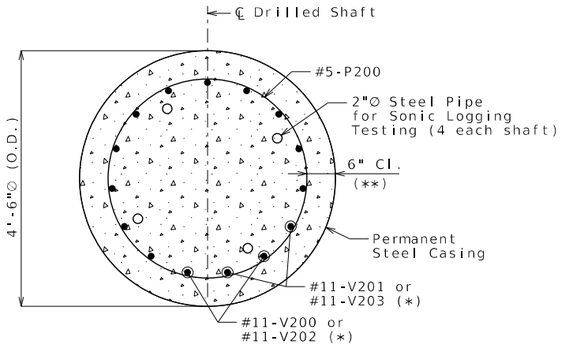

SECTION E-E

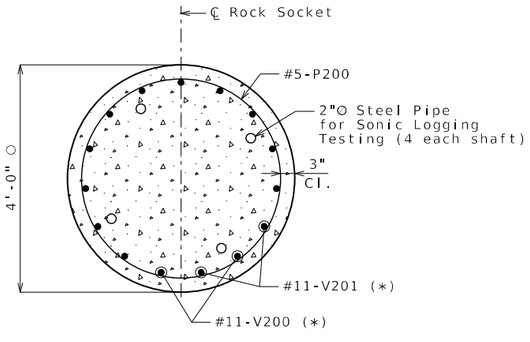

SECTION F-F

(*) At Contractor's option, vertical column/drilled shaft bars may be spliced by MBS in the allowable splice zone. Splices shall be staggered a min. 2'-0" in an alternating pattern.

(**) To outside of casing.

INTERMEDIATE BENT NO. 2 DETAILS

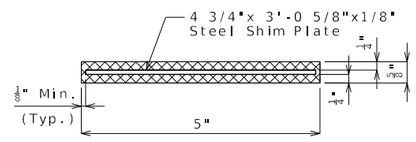

TYPICAL SECTION THRU LAMINATED NEOPRENE BEARING PAD

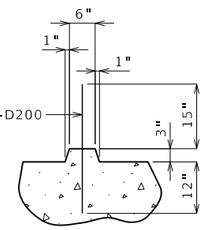

SECTION THRU KEY

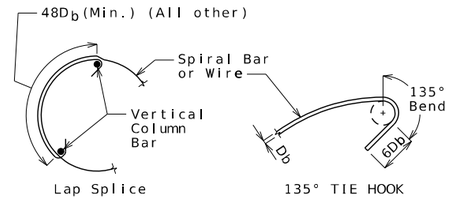

INTERMEDIATE SPLICE OF SPIRALS

Standard 135-degree tie hooks that engage vertical column reinforcing bars shall be provided at each end of splice.

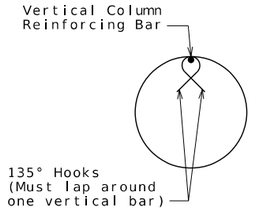

SEISMIC STIRRUP BAR

Note: Seismic hoop hooks shall be staggered around the column at about one-third of the hoop circumference.

Notes:

When contractor uses MBS for column and drilled shaft vertical reinforcement, contractor shall increase diameter of stirrup bars and seismic bars (spiral/hoop) as needed at the MBS locations. No additional payment will be made for this adjustment. Stirrup bars and seismic bars shall not be shifted to create large gaps to avoid MBS.

Work this sheet with Sheet No. 12.

For Diaphragm Details, see Sheet No. 26.

For steps of 2 inches or more, use 2 1/4 x 1/2 inch Joint Filler up vertical face.

(1) - Denotes girder number.

STATE OF MISSOURI
RYAN DAVID SHAW
NUMBER PE-2011002089
PROFESSIONAL ENGINEER
THIS SHEET HAS BEEN SIGNED, SEALED AND DATED ELECTRONICALLY

DATE PREPARED 4/2/2026
ROUTE I-270 | STATE MO
DISTRICT BR | SHEET NO. 13
COUNTY ST. LOUIS
JOB NO. JSL0021
CONTRACT ID.
PROJECT NO.
BRIDGE NO. A9494

DESCRIPTION | DATE

MISSOURI HIGHWAYS AND TRANSPORTATION COMMISSION
105 WEST CAPITOL
JEFFERSON CITY, MO 65102
1-888-ASK-MODOT (1-888-275-6636)

HDR Engineering, Inc.
1001 Highlands Plaza Drive
Suite 200
St. Louis, MO 63110
314-425-8300
Certificate of Authority: 000856

Detailed September 2025
Checked September 2025

Note: This drawing is not to scale. Follow dimensions.

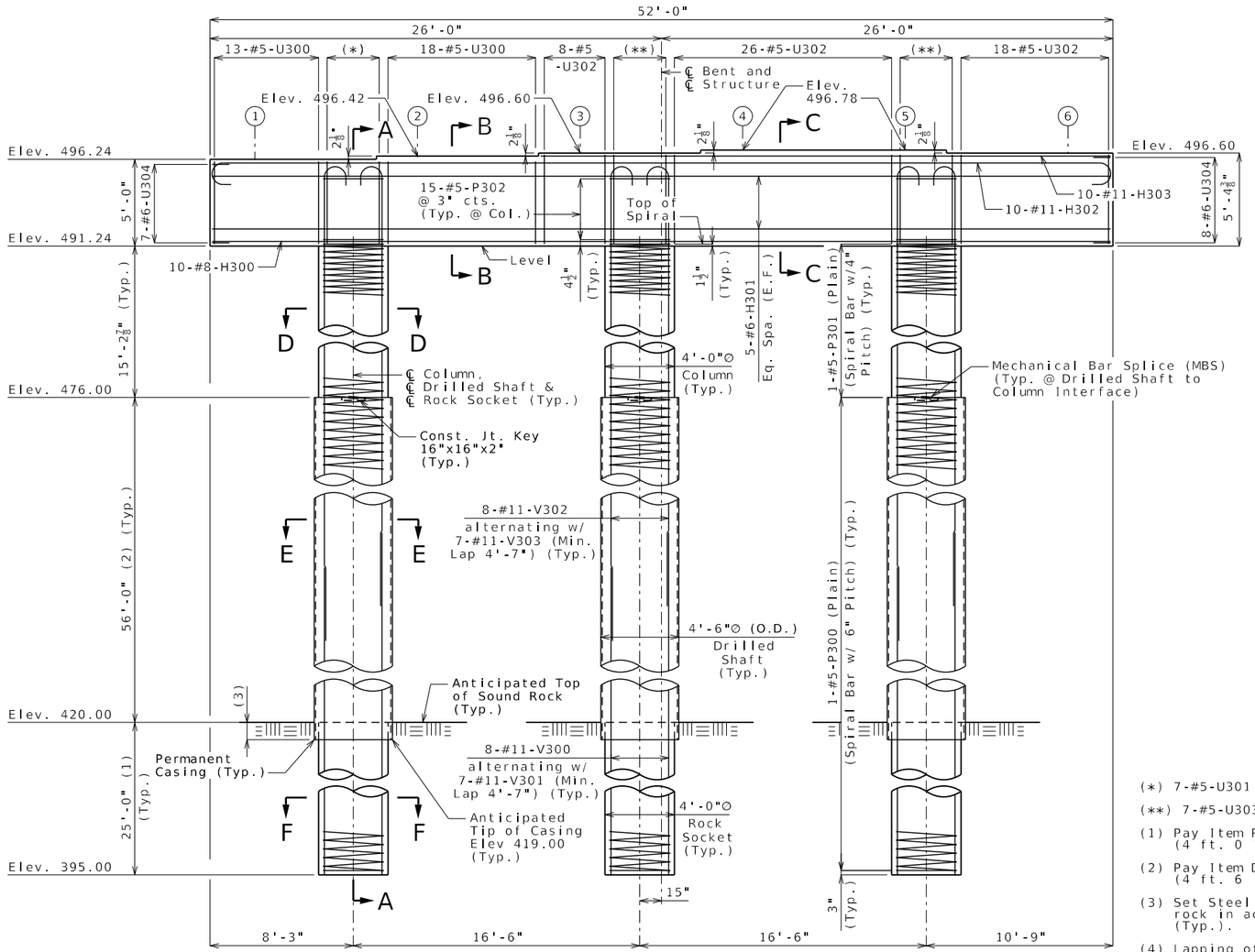

ELEVATION
(Beam keys not shown for clarity.)

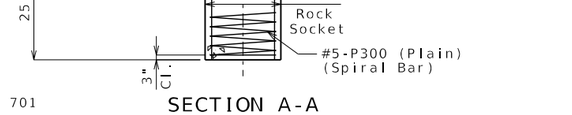

SECTION A-A

(*) 7-#5-U301

(**) 7-#5-U303

(1) Pay Item Rock Sockets (4 ft. 0 in. Dia.)

(2) Pay Item Drilled Shafts (4 ft. 6 in. Dia.)

(3) Set Steel Casing into sound rock in accordance with Sec 701 (Typ.).

(4) Lapping of spiral and vertical reinforcement is not allowed in this zone.

(5) Lap splices and mechanical bars splices, if used, are to be alternately staggered at least 2'-0" at two different locations.

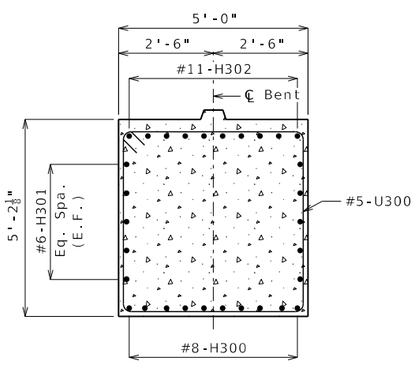

SECTION B-B

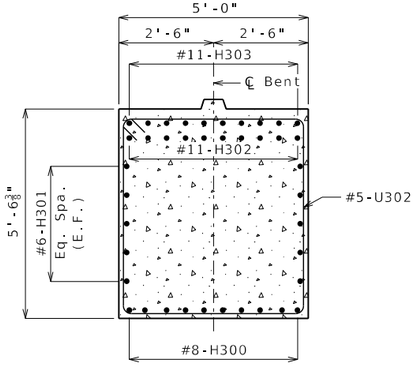

SECTION C-C

Substructure Quantity Table
for Intermediate Bent No. 3

Item		Quantity
Drilled Shafts (4 ft. 6 in. Dia.)	linear foot	168
Rock Sockets (4 ft. 0 in. Dia.)	linear foot	75
Video Camera Inspection	each	3
Foundation Inspection Holes	linear foot	105
Sonic Logging Testing	each	3
Class B Concrete (Substructure)	cu. yard	72.5
Reinforcing Steel (Galvanized)	pound	45,080

These quantities are included in the Estimated Quantities table on Sheet No. 2.
All reinforcement in drilled shafts and rock sockets is included in the substructure quantities.

Notes:

For locations and mounting details of Underpass Lighting, see Roadway plans.

The cost of any required excavation to the top of the drilled shafts will be considered completely covered by the contract unit price for other items.

The hooks of vertical bars embedded in the beam cap shall not be turned outward, away from the column core.

Work this sheet with Sheet No. 15.

Thickness of permanent steel casing shall be in accordance with Sec 701.

An additional 4 feet has been added to V-bar lengths and an additional 4 feet of height has been added to P300 and P301 length in the quantities, if required, for possible change in drilled shaft or rock socket length. The additional V-bar length shall be cut off or included in the reinforcement lap if not required. The additional P-bar length shall be cut off, with allowance for maintaining the required 1-1/2 turns at the end of spiral length.The spiral pitch shall be spaced similarly to that shown in elevation, if required, but not less than 6-inch centers in the drilled shaft and rock socket.

Sonic logging testing shall be performed on all drilled shafts and rock sockets.

E.F. Denotes Each Face.

(1) - Denotes Girder Number.

INTERMEDIATE BENT NO. 3 DETAILS

Detailed September 2025
Checked September 2025

Note: This drawing is not to scale. Follow dimensions.

STATE OF MISSOURI
RYAN DAVID SHAW
NUMBER PE-2011000269
PROFESSIONAL ENGINEER
THIS SHEET HAS BEEN SIGNED, SEALED AND DATED ELECTRONICALLY

DATE PREPARED 4/2/2026

ROUTE	STATE
I-270	MO
DISTRICT	SHEET NO.
BR	14

COUNTY ST. LOUIS
JOB NO. JSL0021
CONTRACT ID.
PROJECT NO.
BRIDGE NO. A9494

DESCRIPTION | DATE

MISSOURI HIGHWAYS AND TRANSPORTATION COMMISSION
105 WEST CAPITOL
JEFFERSON CITY, MO 65102
1-888-ASK-MODOT (1-888-275-6636)

HDR Engineering, Inc.
1001 Highlands Plaza Drive
Suite 200
St. Louis, MO 63110
314-425-8300
Certificate of Authority: 000856

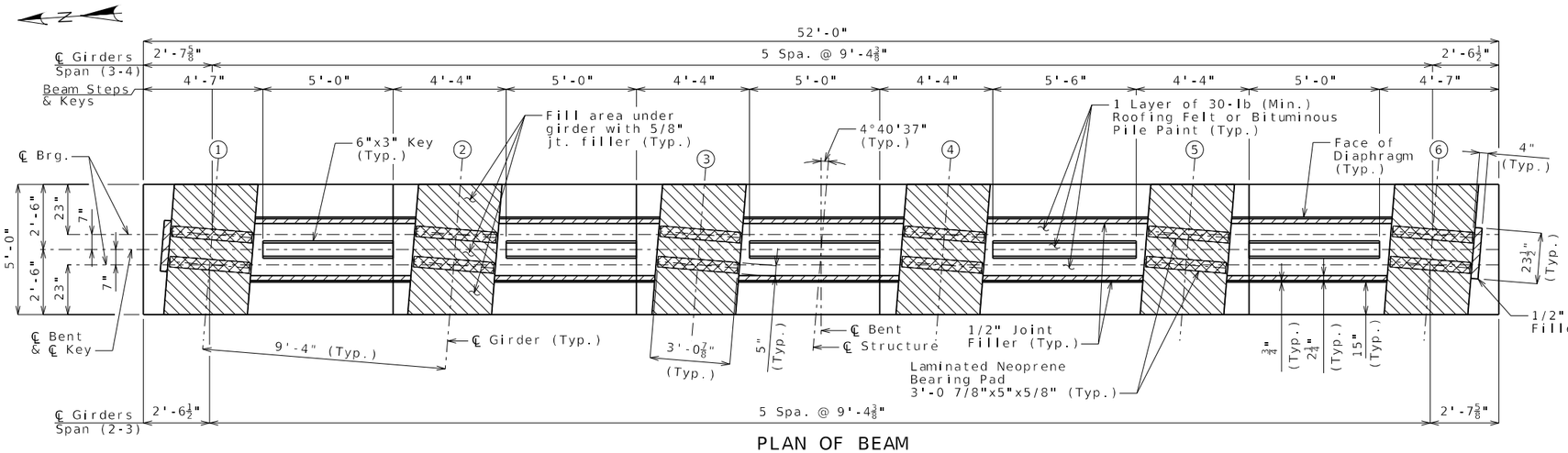

PLAN OF BEAM

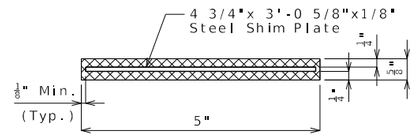

TYPICAL SECTION THRU LAMINATED NEOPRENE BEARING PAD

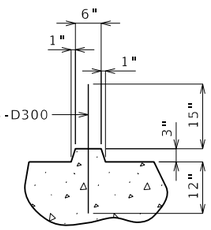

SECTION THRU KEY

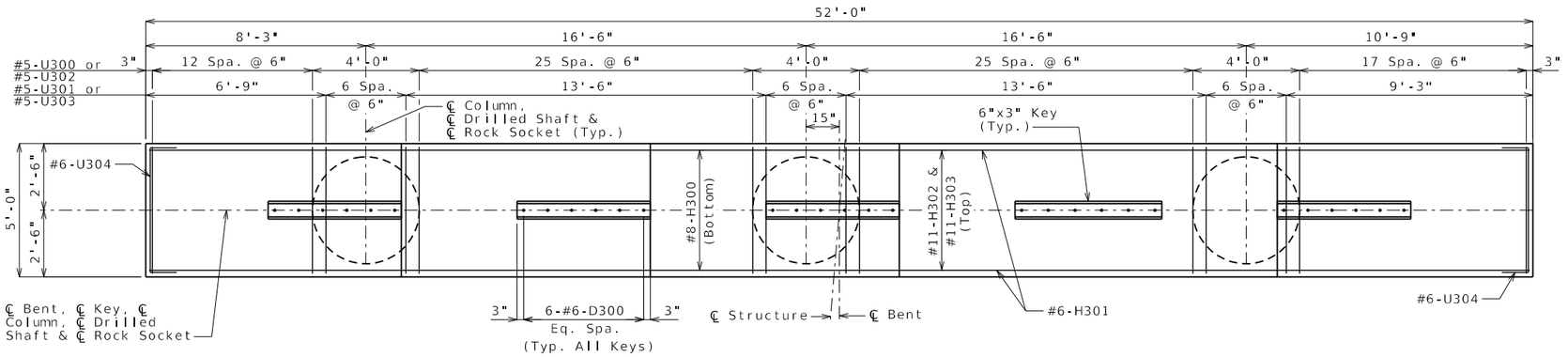

PLAN OF BEAM SHOWING REINFORCEMENT

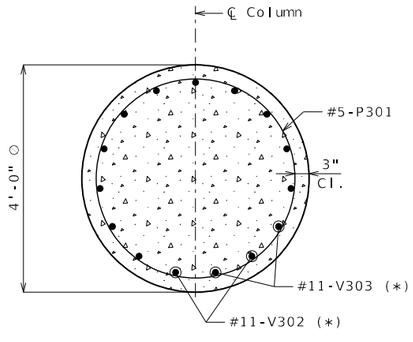

SECTION D-D

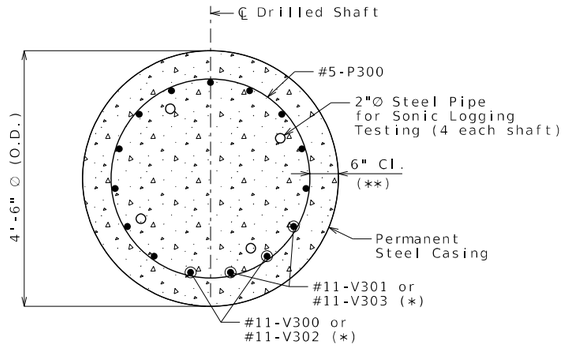

SECTION E-E

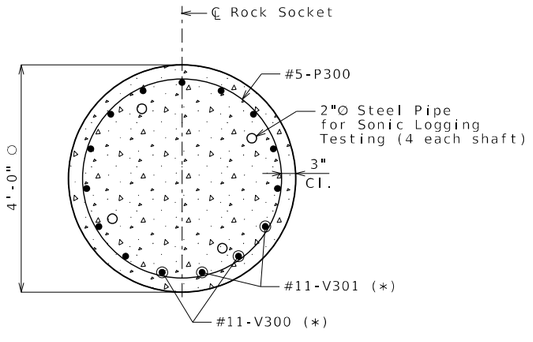

SECTION F-F

(*) At Contractor's option, vertical column/drilled shaft bars may be spliced by MBS in the allowable splice zone. Splices shall be staggered a min. 2'-0" in an alternating pattern.

(**) To outside of casing.

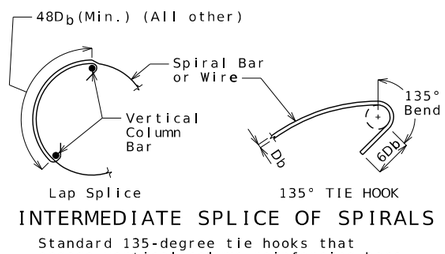

INTERMEDIATE SPLICE OF SPIRALS

Standard 135-degree tie hooks that engage vertical column reinforcing bars shall be provided at each end of splice.

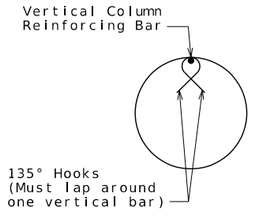

SEISMIC STIRRUP BAR

Note: Seismic hoop hooks shall be staggered around the column at about one-third of the hoop circumference.

Notes:

When contractor uses MBS for column and drilled shaft vertical reinforcement, contractor shall increase diameter of stirrup bars and seismic bars (spiral/hoop) as needed at the MBS locations. No additional payment will be made for this adjustment. Stirrup bars and seismic bars shall not be shifted to create large gaps to avoid MBS.

Work this sheet with Sheet No. 14.

For Diaphragm Details, see Sheet No. 26.

For steps of 2 inches or more, use 2 1/4 x 1/2 inch Joint Filler up vertical face.

(1) - Denotes girder number.

INTERMEDIATE BENT NO. 3 DETAILS

Detailed September 2025
Checked September 2025

Note: This drawing is not to scale. Follow dimensions.

STATE OF MISSOURI
RYAN DAVID SHAW
NUMBER PE-2011002089
PROFESSIONAL ENGINEER
THIS SHEET HAS BEEN SIGNED, SEALED AND DATED ELECTRONICALLY

DATE PREPARED 4/2/2026
ROUTE I-270 | STATE MO
DISTRICT BR | SHEET NO. 15
COUNTY ST. LOUIS
JOB NO. JSL0021
CONTRACT ID.
PROJECT NO.
BRIDGE NO. A9494

DESCRIPTION | DATE

MISSOURI HIGHWAYS AND TRANSPORTATION COMMISSION
105 WEST CAPITOL
JEFFERSON CITY, MO 65102
1-888-ASK-MODOT (1-888-275-6636)

HDR Engineering, Inc.
1001 Highlands Plaza Drive
Suite 200
St. Louis, MO 63110
314-425-8300
Certificate of Authority: 000856

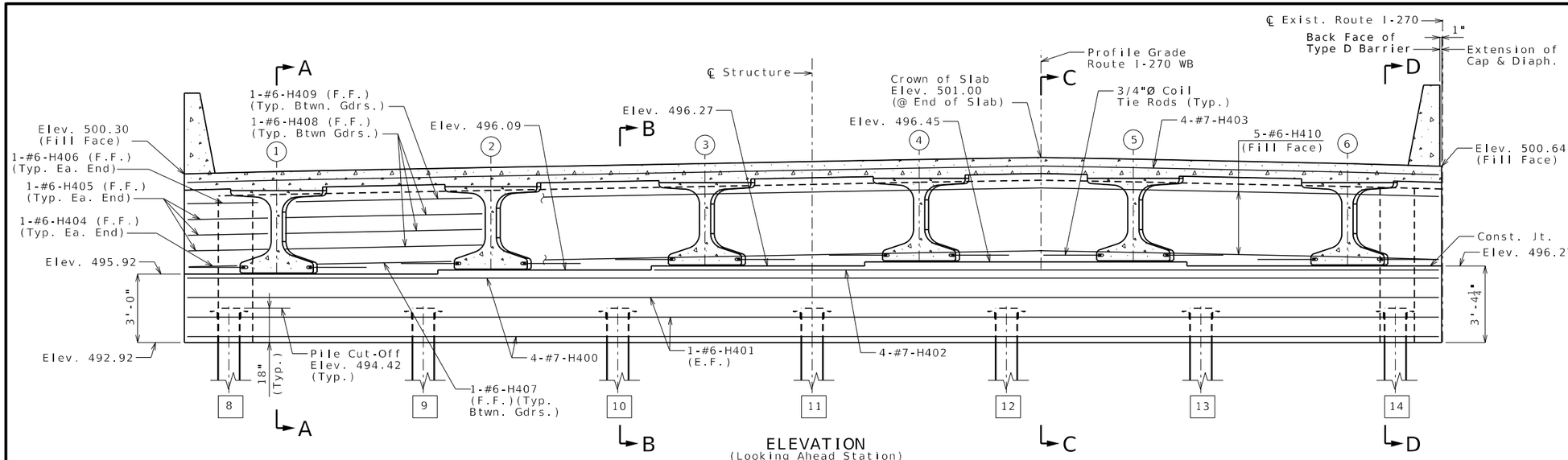

ELEVATION
(Looking Ahead Station)

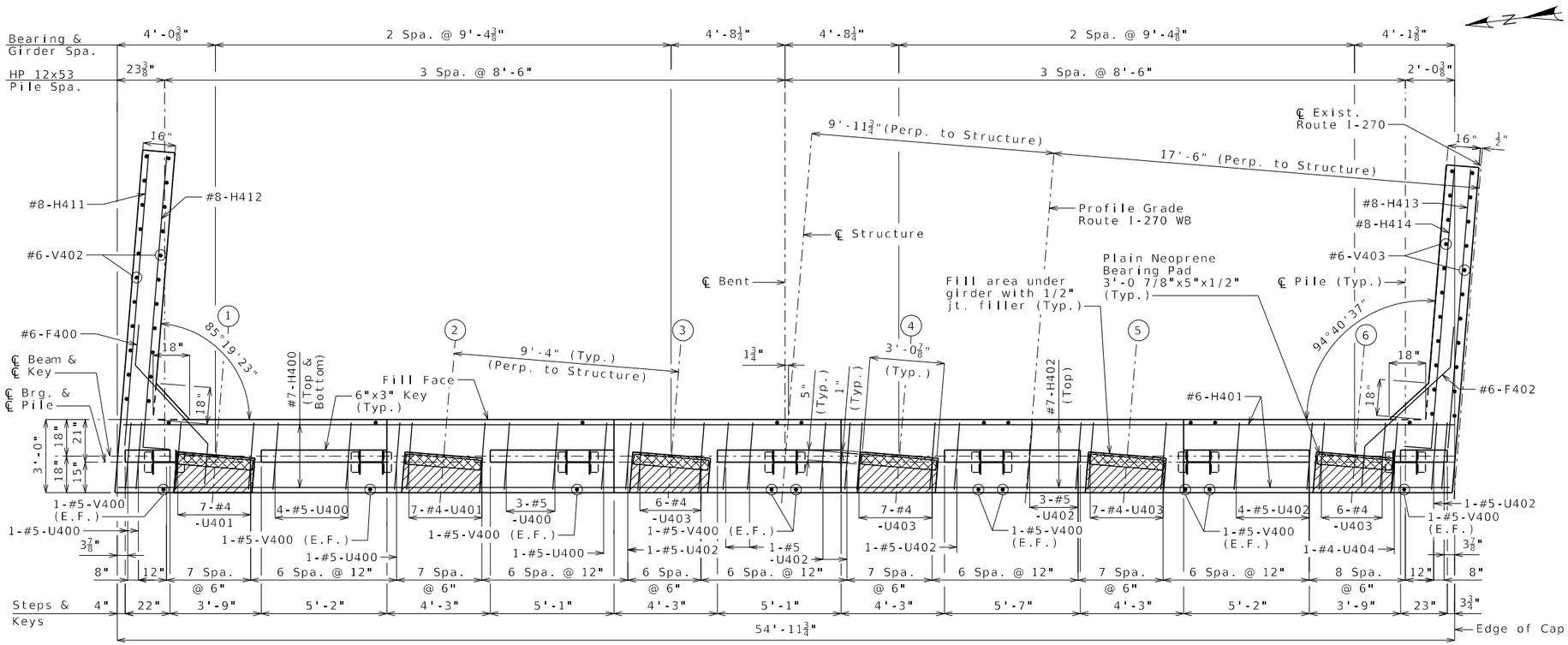

PLAN OF BEAM
(Horizontal dimensions are measured along ℄ Piles and ℄ Brg.)

Notes:

Work this sheet with Sheets No. 17 & 18.

For Sections A-A thru C-C, see Sheet No. 17.

For Section D-D, see Sheet No. 18.

For Key Details, Pile Anchor Details and Steel Pile Splice Detail, see Sheet No. 18.

For location of coil tie rods, see Sheets No. 24 & 25.

Reinforcing steel shall be shifted to clear piles. U-bars shall clear piles by at least 1 1/2 inches.

Strands at ends of girders shall be field bent or, if necessary, cut in field to maintain 1 1/2-inch minimum clearance to fill face of end bent.

All concrete in the end bent above top of beam and below top of slab shall be Class B-2.

#6-F400 and #6-F402 bars shall be bent in field to clear girders.

The U-bars, sets of V-bars, and #5-H420 bars shall be placed parallel to centerline of roadway.

For details and reinforcement of barriers at end bent, see Sheet No. 35.

E.F. Denotes Each Face.

F.F. Denotes Front Face.

(1) - Denotes girder number.

[1] - Denotes pile number.

Substructure Quantity Table for End Bent No. 4

Item		Quantity
Class 1 Excavation	cu. yard	40
Galvanized Structural Steel Piles (12 in.)	linear foot	434
Pile Point Reinforcement	each	7
Class B Concrete (Substructure)	cu. yard	24.4

These quantities are included in the Estimated Quantities table on Sheet No. 2.

END BENT NO. 4 DETAILS

Detailed September 2025
Checked September 2025

Note: This drawing is not to scale. Follow dimensions.

STATE OF MISSOURI
RYAN DAVID SHAW
NUMBER PE-2011000369
PROFESSIONAL ENGINEER
THIS SHEET HAS BEEN SIGNED, SEALED AND DATED ELECTRONICALLY

DATE PREPARED
4/2/2026

ROUTE	STATE
I-270	MO
DISTRICT	SHEET NO.
BR	16

COUNTY
ST. LOUIS

JOB NO.
JSL0021

CONTRACT ID.

PROJECT NO.

BRIDGE NO.
A9494

DESCRIPTION	DATE

MISSOURI HIGHWAYS AND TRANSPORTATION COMMISSION
105 WEST CAPITOL
JEFFERSON CITY, MO 65102
1-888-ASK-MODOT (1-888-275-6636)

HDR Engineering, Inc.
1001 Highlands Plaza Drive
Suite 200
St. Louis, MO 63110
314-425-6300
Certificate of Authority: 000856

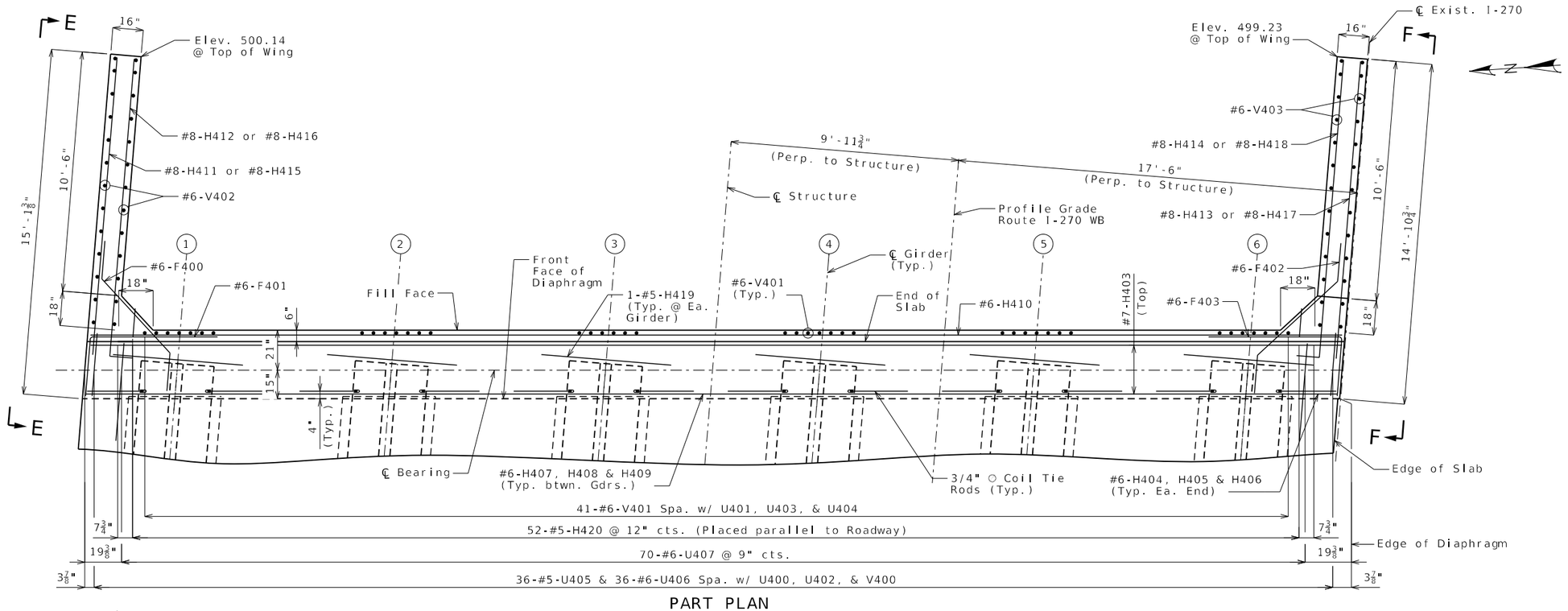

PART PLAN

(Horizontal dimensions are measured along ℄ Brg.)

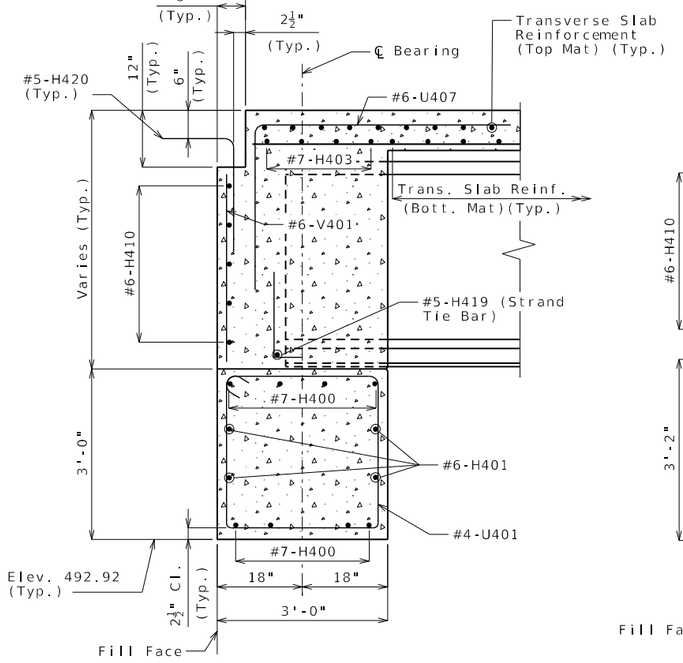

SECTION A-A

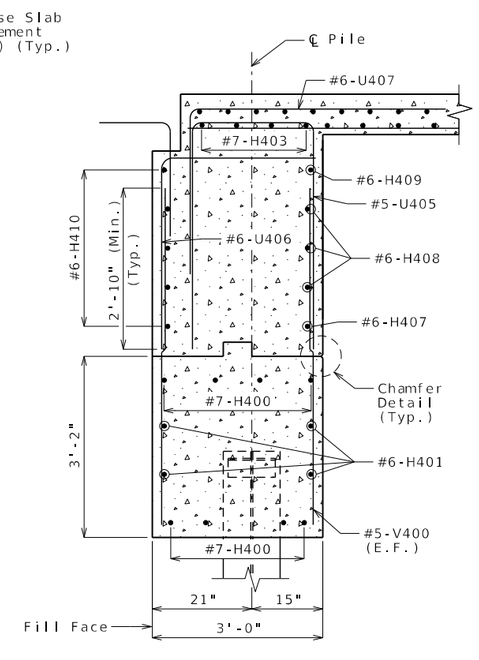

SECTION B-B

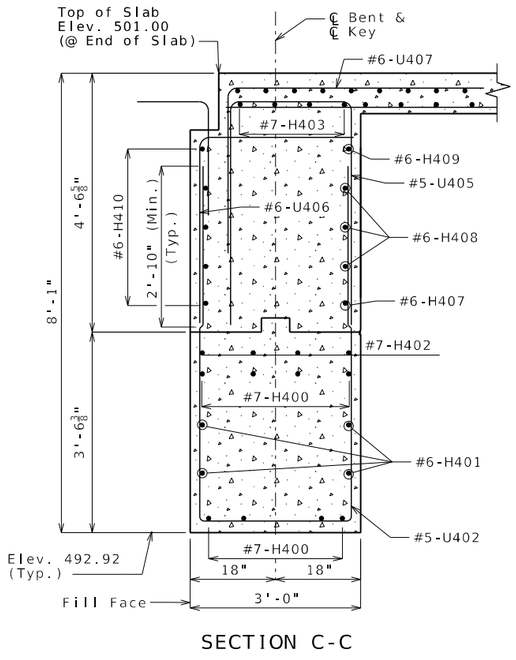

SECTION C-C

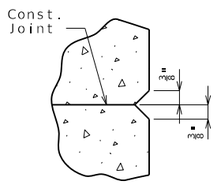

CHAMFER DETAIL

Notes:

Work this sheet with Sheets No. 16 & 18.

#6-F400 and #6-F402 bars shall be bent in the field to clear girders.

The U-bars and #5-H420 bars shall be placed parallel to centerline roadway.

For location of Sections A-A thru C-C, see Sheet No. 16.

For Elevations E-E and F-F, see Sheet No. 18.

For Key details, Pile Anchor details and Pile Splice details, see Sheet No. 18.

For location of coil tie rods and #5-H419 (strand tie bar), see Sheets No. 24 & 25.

For details and reinforcement of barriers at end bent, see Sheet No. 35.

E.F. Denotes Each Face.

(1) - Denotes girder number.

END BENT NO. 4 DETAILS

Detailed September 2025
Checked September 2025

Note: This drawing is not to scale. Follow dimensions.

STATE OF MISSOURI
RYAN DAVID SHAW
NUMBER PE-2011000369
PROFESSIONAL ENGINEER
THIS SHEET HAS BEEN SIGNED, SEALED AND DATED ELECTRONICALLY

DATE PREPARED
4/2/2026

ROUTE	STATE
I-270	MO
DISTRICT	SHEET NO.
BR	17

COUNTY
ST. LOUIS

JOB NO.
JSL0021

CONTRACT ID.

PROJECT NO.

BRIDGE NO.
A9494

DESCRIPTION

DATE

MISSOURI HIGHWAYS AND TRANSPORTATION COMMISSION
105 WEST CAPITOL
JEFFERSON CITY, MO 65102
1-888-ASK-MODOT (1-888-275-6636)

HDR Engineering, Inc.
1001 Highlands Plaza Drive
Suite 200
St. Louis, MO 63110
314-425-8300
Certificate of Authority: 000856

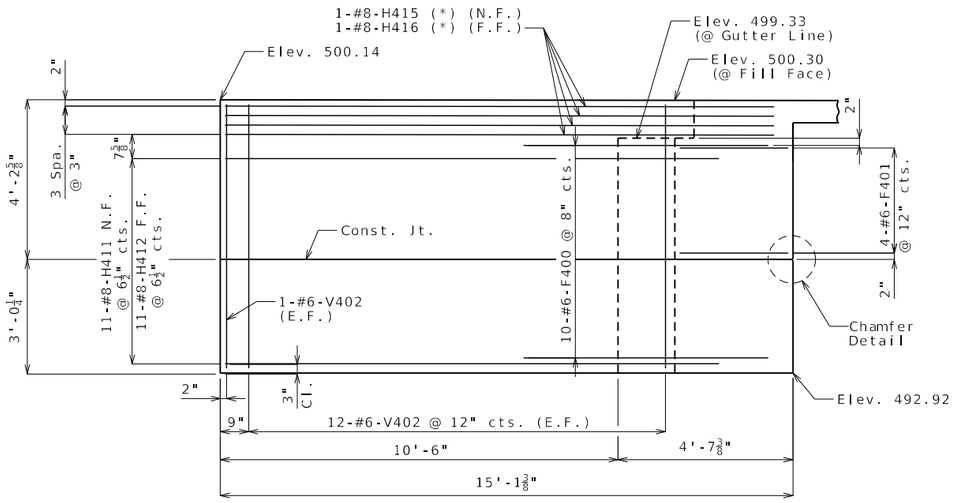

ELEVATION E-E

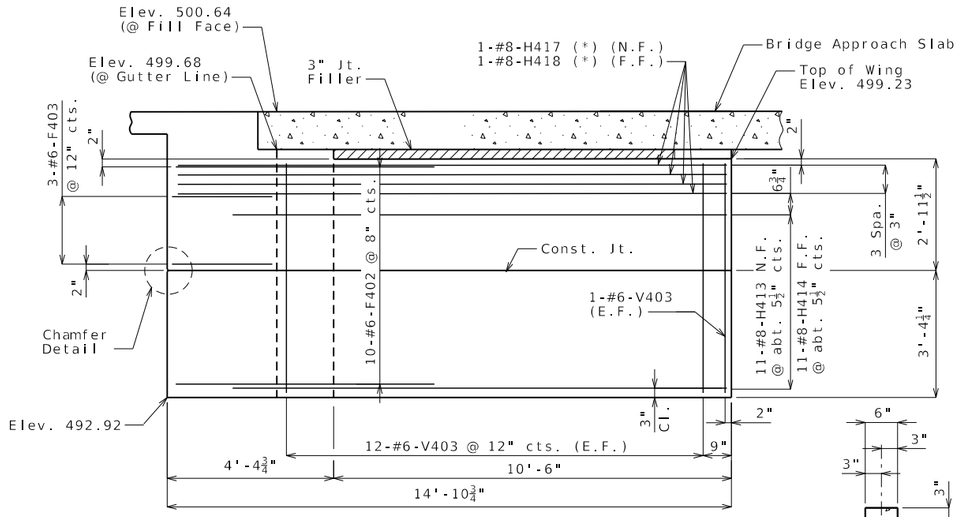

ELEVATION F-F

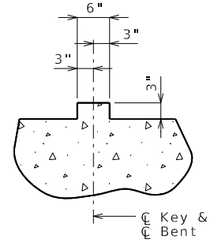

TYPICAL SECTION THRU KEY

Notes:

All dimensions and elevations given at outside face of wing unless otherwise noted.

The #6-F400 and F402 bars shall be bent in the field to clear girders.

(*) Place with grade

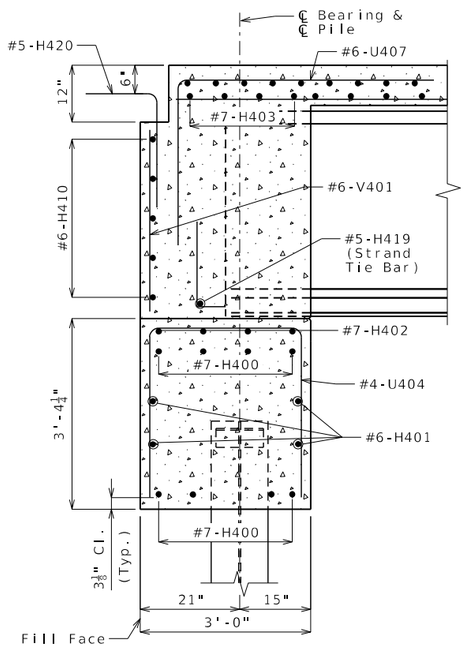

SECTION D-D

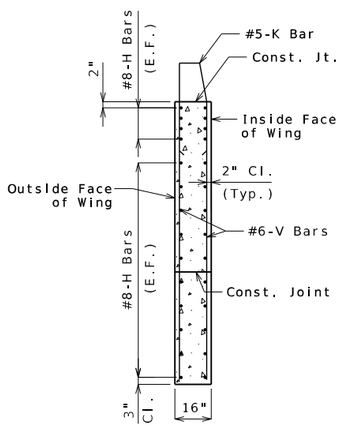

TYPICAL SECTION THRU LEFT WING

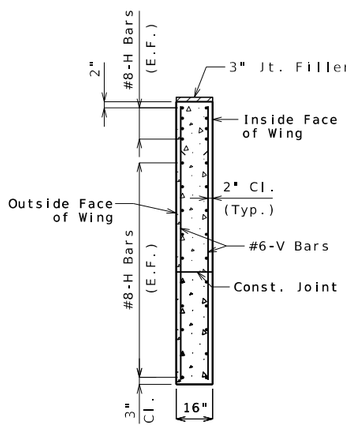

TYPICAL SECTION THRU RIGHT WING

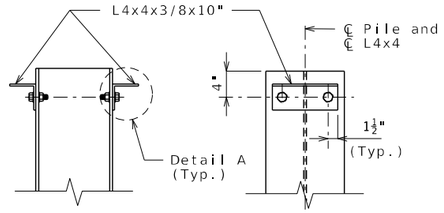

DETAILS OF HP PILE ANCHORS

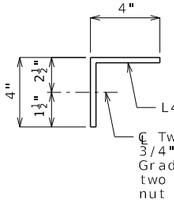

DETAIL A

Angles shall be coated with a minimum of two coats of non-aluminum epoxy mastic primer to provide a dry film thickness of 4 mils minimum, 8 mils maximum, or galvanized in accordance with Sec 1081. Bolts, washers and nuts shall be galvanized in accordance with AASHTO M 232 (ASTM A153), Class C.

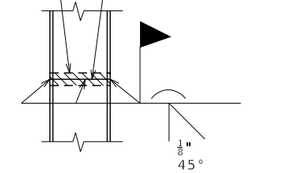

STEEL PILE SPLICE

(If required)

(**) Galvanizing material shall be omitted or removed one inch clear of weld locations in accordance with Sec 702.

Notes:

Work this sheet with Sheets No. 16 & 17.

For Chamfer Detail, see Sheet No. 17.

Seal joint between vertical faces of end bent beams and diaphragms of Bridge No. A9493 with the vertical faces of Bridge No. A9494. Preformed compression joint seal shall be in accordance with Sec 717. Payment will be considered covered by the contract unit price for other items included in the contract.

For Modified Type D Barrier (Right) At Approach Slabs, see Sheet No. 36.

For location of Section D-D, see Sheet No. 16.

For location of Elevations E-E and F-F, see Sheet No. 17.

For details and reinforcement of barriers at end bent, see Sheet No. 35.

E.F. Denotes Each Face.

F.F. Denotes Far Face.

N.F. Denotes Near Face.

END BENT NO. 4 DETAILS

Detailed September 2025
Checked September 2025

Note: This drawing is not to scale. Follow dimensions.

STATE OF MISSOURI
RYAN DAVID SHAW
NUMBER PE-2011000369
PROFESSIONAL ENGINEER
THIS SHEET HAS BEEN SIGNED, SEALED AND DATED ELECTRONICALLY

DATE PREPARED 4/2/2026

ROUTE	STATE
I-270	MO
DISTRICT	SHEET NO.
BR	18

COUNTY: ST. LOUIS
JOB NO.: JSL0021
CONTRACT ID.:
PROJECT NO.:
BRIDGE NO.: A9494

DESCRIPTION

DATE

MISSOURI HIGHWAYS AND TRANSPORTATION COMMISSION
105 WEST CAPITOL
JEFFERSON CITY, MO 65102
1-888-ASK-MODOT (1-888-275-6636)

HDR Engineering, Inc.
1001 Highlands Plaza Drive
Suite 200
St. Louis, MO 63110
314-425-8300
Certificate of Authority: 000856

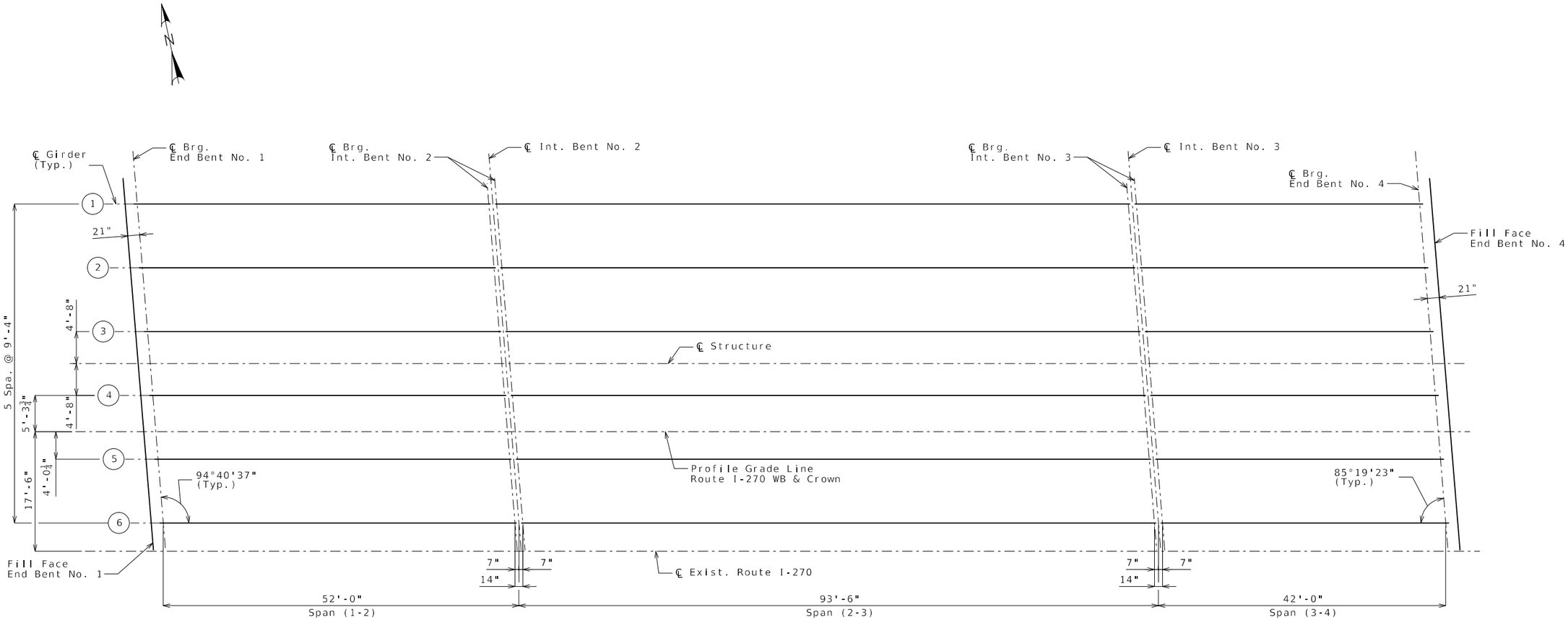

PLAN SHOWING PRESTRESSED CONCRETE NU-GIRDER LAYOUT

Notes:

All longitudinal dimensions are measured horizontal.

All girders are parallel.

(1) - Denotes girder number.

GIRDER LAYOUT

Detailed September 2025
Checked September 2025

Note: This drawing is not to scale. Follow dimensions.

STATE OF MISSOURI
RYAN DAVID SHAW
NUMBER PE-2011000369
PROFESSIONAL ENGINEER

THIS SHEET HAS BEEN SIGNED, SEALED AND DATED ELECTRONICALLY

DATE PREPARED
4/2/2026

ROUTE	STATE
I-270	MO
DISTRICT	SHEET NO.
BR	19

COUNTY
ST. LOUIS

JOB NO.
JSL0021

CONTRACT ID.

PROJECT NO.

BRIDGE NO.
A9494

DESCRIPTION	DATE

MISSOURI HIGHWAYS AND TRANSPORTATION COMMISSION

105 WEST CAPITOL
JEFFERSON CITY, MO 65102
1-888-ASK-MODOT (1-888-275-6636)

HDR Engineering, Inc.
1001 Highlands Plaza Drive
Suite 200
St. Louis, MO 63110
314-425-8300
Certificate of Authority: 000856

(1) Fabricator shall apply a bond breaker to this region.

(2) Outer strands tensioned to 2.02 kips/strand and inner strands to 8 kips/strand. Placed symmetrical about ℄ Girder. May be moved laterally in pairs.

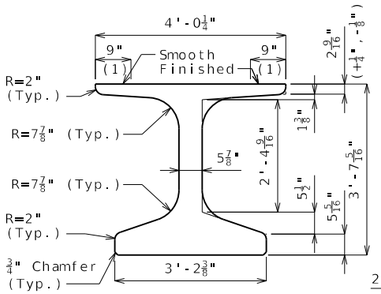

DIMENSIONS

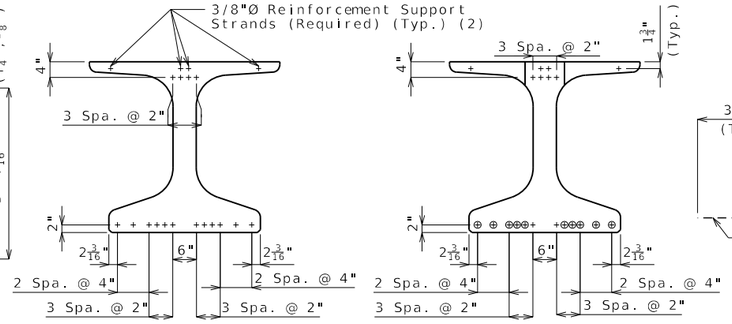

℄ GIRDER END OF GIRDER

STRAND ARRANGEMENT

\+ Indicates prestressing strand.

o Indicates cut & shop bend with 3'-0" projection.

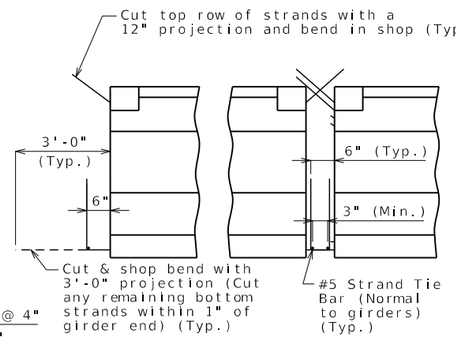

END BENT INTERMEDIATE BENT

STRANDS AT GIRDER ENDS

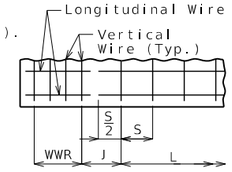

WELDED WIRE PLACEMENT

S = Vertical wire spacing

L = Length of WWR mats

J = Distance between WWR mats

Bill of Reinforcing Steel

Bars Each Girder

No.	Size/Mark	Length	Shape
74	3 G1	2'-10"	8
2	4 G3	3'-10"	20
2	4 G4	2'-3"	20
2	4 G5	2'-8"	20

Welded Wire Each Girder

Mark	Size	S	W	L	J
WWR1	D31	4"	W12	4'-0"	8"
WWR2	D31	8"	W12	6'-8"	10¼"
WWR3	D31	12"	W12	24'-0"	--
WWR6	D31	2"	W12	16"	4"

Bending Diagrams

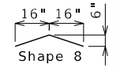

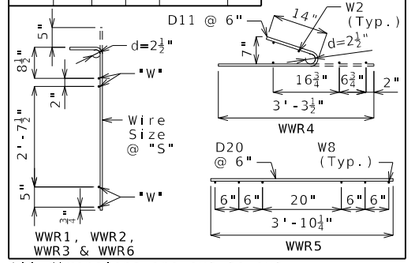

All dimensions are out to out.

Hooks and bends shall be in accordance with the CRSI Manual of Standard Practice for Detailing Reinforced Concrete Structures, Stirrup and Tie Dimensions.

Actual bar lengths are measured along centerline of bar to the nearest inch.

Minimum clearance to reinforcing shall be 1", unless otherwise shown.

All bar reinforcement shall be ASTM A706 Grade 60.

WWR shall not be epoxy coated.

G4 and G5 not required for interior girders. Half no. of G3, G4 and G5 not required for ext. girders of end spans.

General Notes:

Concrete for prestressed beams shall be Class A-1 with f'c = 8000 psi and f'ci = 6500 psi.

Use 16 strands, 0.6"Ø Grade 270, with an initial prestress force of 703.1 kips.

Pretensioned members shall be in accordance with Sec 1029.

Fabricator shall be responsible for location and design of lifting devices.

Exterior and interior girders are the same except: coil ties, top flange blockout, and coil inserts for slab drains.

The contractor shall provide bracing necessary for lateral and torsional stability of the girders during construction of the bracing after the slab has attained 75% design strength. Contractor shall not drill holes in the girders.

For Girder Camber Diagram, see Sheet No. 29.

For location of coil inserts at slab drains, see Sheet No. 27.

For location of coil ties at concrete diaphragms and integral bents, see Sheets No. 8, 9, and 26.

Alternate bar reinforcing steel details are provided and may be used. The same type of reinforcing steel shall be used for all girders in all spans.

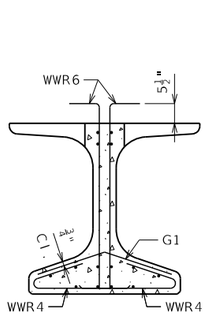

SECTION A-A

Strands not shown for clarity.

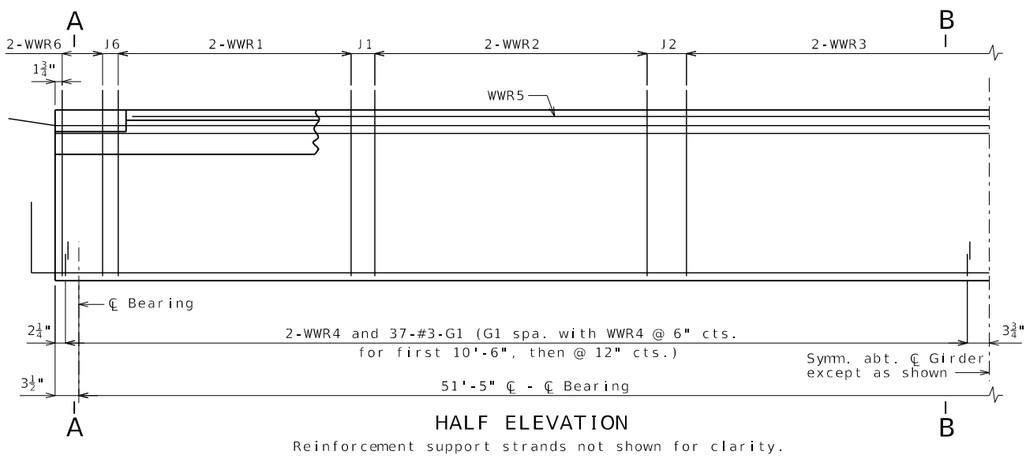

HALF ELEVATION

Reinforcement support strands not shown for clarity.

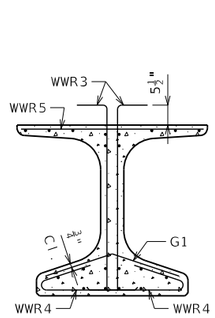

SECTION B-B

Strands not shown for clarity.

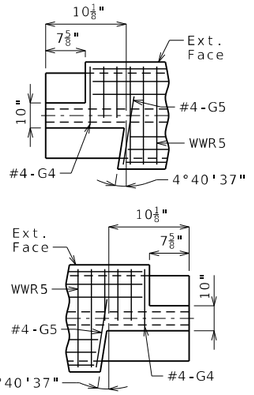

LEFT EXTERIOR GIRDER AT INTERMEDIATE BENT

Rotate 180° for right ext.

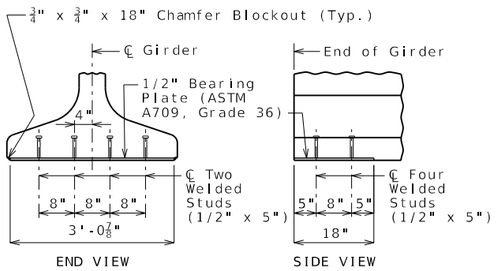

END VIEW SIDE VIEW

BEARING PLATE

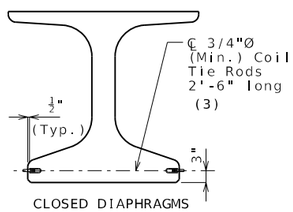

CLOSED DIAPHRAGMS AND INTEGRAL BENTS

COIL TIES

Exclude coil tie at exterior face of exterior girders except at integral end bents.

(3) 2'-5" at exterior face of exterior girders at end bents

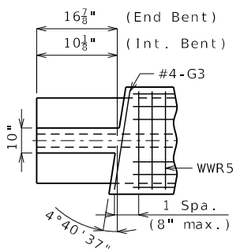

INTERIOR GIRDER AT ALL BENTS & EXTERIOR GIRDER AT END BENT

TOP FLANGE BLOCKOUT

Mirror for right advanced.

NU-GIRDERS - SPAN (1-2)

Detailed September 2025
Checked September 2025

Note: This drawing is not to scale. Follow dimensions.

RYAN DAVID SHAW
NUMBER PE-2011030089
PROFESSIONAL ENGINEER
THIS SHEET HAS BEEN SIGNED, SEALED AND DATED ELECTRONICALLY

DATE PREPARED 4/2/2026
ROUTE I-270 | STATE MO
DISTRICT BR | SHEET NO. 20
COUNTY ST. LOUIS
JOB NO. JSL0021
CONTRACT ID.
PROJECT NO.
BRIDGE NO. A9494

DESCRIPTION | DATE

MISSOURI HIGHWAYS AND TRANSPORTATION COMMISSION
105 WEST CAPITOL
JEFFERSON CITY, MO 65102
1-888-ASK-MODOT (1-888-275-6636)
HDR Engineering, Inc.
1001 Highlands Plaza Drive
Suite 200
St. Louis, MO 63110
314-425-8300
Certificate of Authority: 000856

(1) Fabricator shall apply a bond breaker to this region.

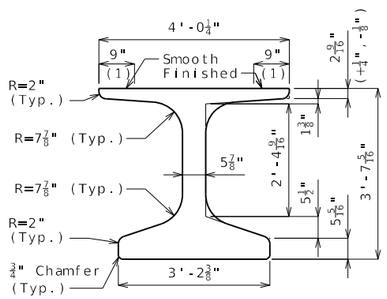

DIMENSIONS

(2) Outer strands tensioned to 2.02 kips/strand and inner strands to 8 kips/strand. Placed symmetrical about ℄ Girder. May be moved laterally in pairs.

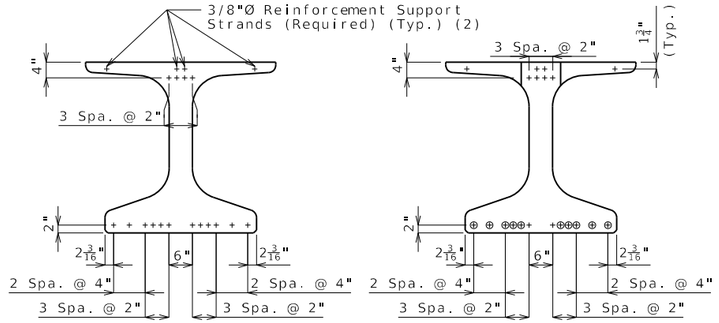

STRAND ARRANGEMENT

\+ Indicates prestressing strand.

o Indicates cut & shop bend with 3'-0" projection.

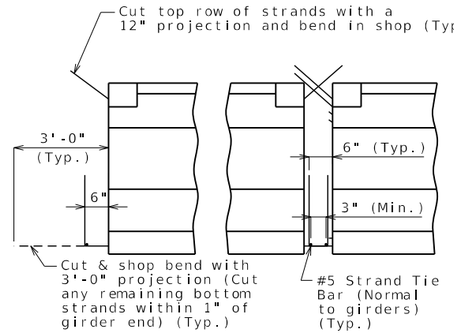

STRANDS AT GIRDER ENDS

Bill of Reinforcing Steel - Each Girder			
No.	Size/ Mark	Length	Shape
118	5 B1	5'-0"	11S
138	4 D1	4'-0"	9S
2	4 G3	3'-10"	20
2	4 G4	2'-3"	20
2	4 G5	2'-8"	20

Bending Diagrams

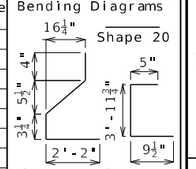

Welded Wire Reinforcement - Each Girder

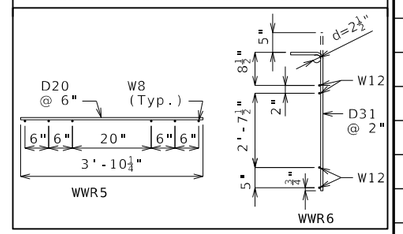

All dimensions are out to out.

Hooks and bends shall be in accordance with the CRSI Manual of Standard Practice for Detailing Reinforced Concrete Structures, Stirrup and Tie Dimensions.

Actual bar lengths are measured along centerline of bar to the nearest inch.

Minimum clearance to reinforcing shall be 1", unless otherwise shown.

All bar reinforcement shall be ASTM A706 Grade 60.

The two D1 bars may be furnished as one bar at the fabricator's option.

All B1 bars shall be epoxy coated.

G4 and G5 not required for interior girders. Half no. of G3, G4 and G5 not required for ext. girders of end spans.

General Notes:

Concrete for prestressed beams shall be Class A-1 with f'c = 8000 psi and f'ci = 6500 psi.

Use 16 strands, 0.6"Ø Grade 270, with an initial prestress force of 703.1 kips.

Pretensioned members shall be in accordance with Sec 1029.

Fabricator shall be responsible for location and design of lifting devices.

Exterior and interior girders are the same except: coil ties, top flange blockout, and coil inserts for slab drains.

The contractor shall provide bracing necessary for lateral and torsional stability of the girders during construction of the concrete slab and remove the bracing after the slab has attained 75% design strength. Contractor shall not drill holes in the girders.

For Girder Camber Diagram, see Sheet No. 29.

For location of coil inserts at slab drains, see Sheet No. 27.

For location of coil ties at concrete diaphragms and integral bents, see Sheets No. 8, 9 and 26.

Alternate bar reinforcing steel details are provided and may be used. The same type of reinforcing steel shall be used for all girders in all spans.

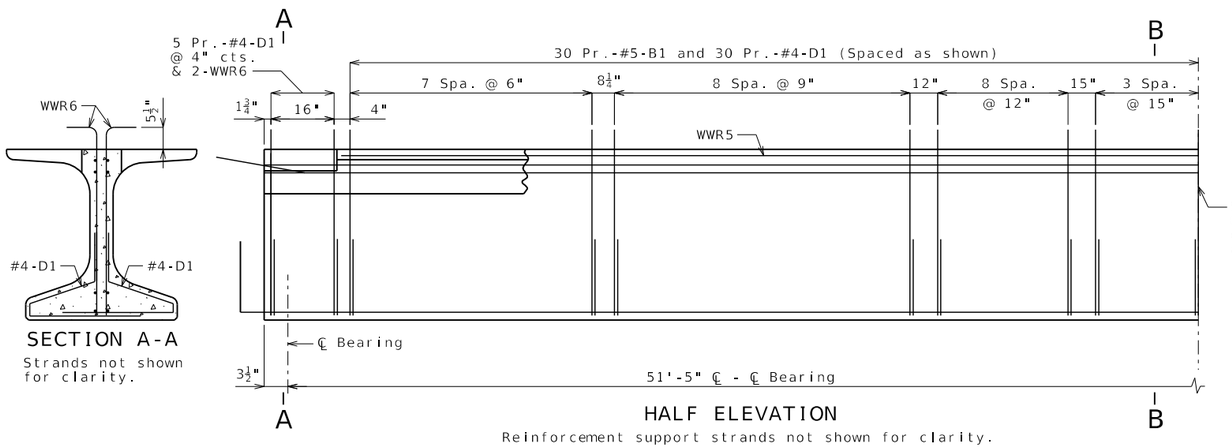

SECTION A-A

Strands not shown for clarity.

HALF ELEVATION

Reinforcement support strands not shown for clarity.

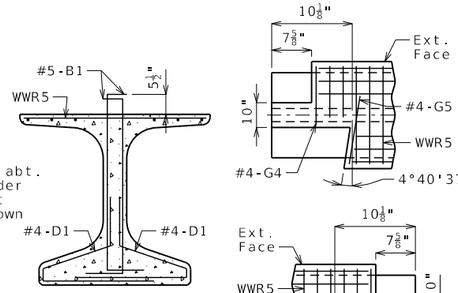

SECTION B-B

Strands not shown for clarity.

LEFT EXTERIOR GIRDER AT INTERMEDIATE BENT

Rotate 180° for right ext.

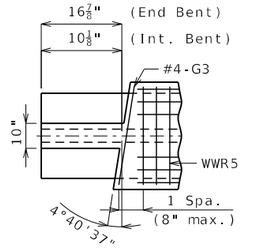

INTERIOR GIRDER AT ALL BENTS & EXTERIOR GIRDER AT END BENT

TOP FLANGE BLOCKOUT

Mirror for right advanced.

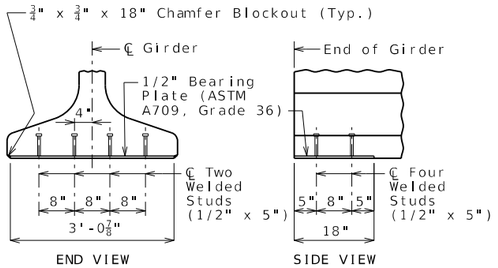

BEARING PLATE

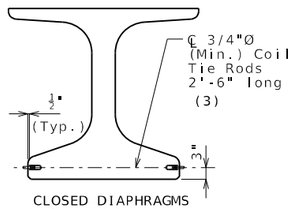

CLOSED DIAPHRAGMS AND INTEGRAL BENTS

COIL TIES

Exclude coil tie at exterior face of exterior girders except at integral end bents.

(3) 2'-5" at exterior face of exterior girders at end bents

NU-GIRDERS (ALTERNATE REINFORCEMENT) - SPAN (1-2)

Detailed September 2025
Checked September 2025

Note: This drawing is not to scale. Follow dimensions.

RYAN DAVID SHAW
NUMBER PE-2011030089
PROFESSIONAL ENGINEER
STATE OF MISSOURI
THIS SHEET HAS BEEN SIGNED, SEALED AND DATED ELECTRONICALLY

DATE PREPARED 4/2/2026

ROUTE	STATE
I-270	MO
DISTRICT	SHEET NO.
BR	21

COUNTY ST. LOUIS

JOB NO. JSL0021

CONTRACT ID.

PROJECT NO.

BRIDGE NO. A9494

DESCRIPTION | DATE

MISSOURI HIGHWAYS AND TRANSPORTATION COMMISSION
105 WEST CAPITOL
JEFFERSON CITY, MO 65102
1-888-ASK-MODOT (1-888-275-6636)

HDR Engineering, Inc.
1001 Highlands Plaza Drive
Suite 200
St. Louis, MO 63110
314-425-8300
Certificate of Authority: 000856

(1) Fabricator shall apply a bond breaker to this region.

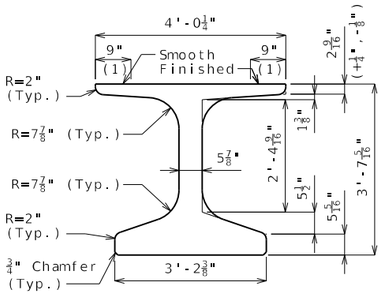

DIMENSIONS

(2) Outer strands tensioned to 2.02 kips/strand and inner strands to 8 kips/strand. Placed symmetrical about ℄ Girder. May be moved laterally in pairs.

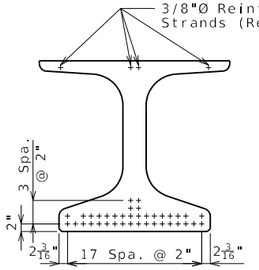

℄ GIRDER

Cut top 2 rows of strands with a 12" projection and bend in shop (Cut any remaining top strands within 1" of end of girder) (Typ.).

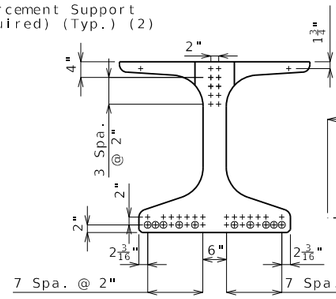

END OF GIRDER

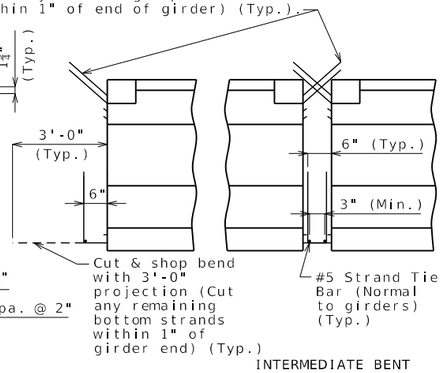

INTERMEDIATE BENT

STRAND ARRANGEMENT

\+ Indicates prestressing strand.

o Indicates cut & shop bend with 3'-0" projection.

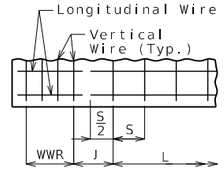

WELDED WIRE PLACEMENT

S = Vertical wire spacing

L = Length of WWR mats

J = Distance between WWR mats

STRANDS AT GIRDER ENDS

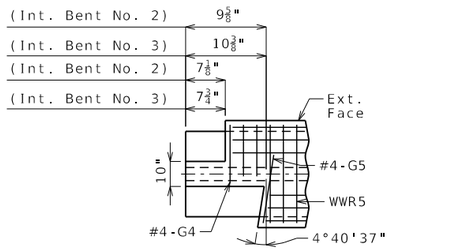

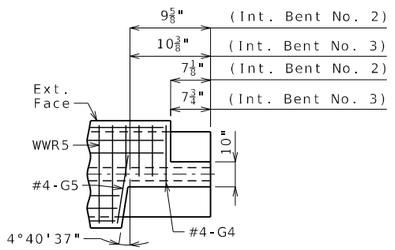

LEFT EXTERIOR GIRDER AT INTERMEDIATE BENT

Rotate 180° for right ext.

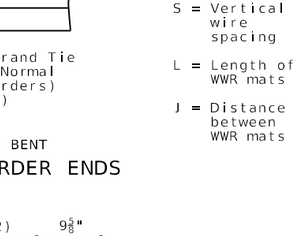

INTERIOR GIRDER AT ALL BENTS

TOP FLANGE BLOCKOUT

Mirror for right advanced.

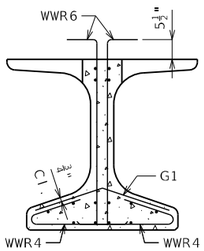

SECTION A-A

Strands not shown for clarity.

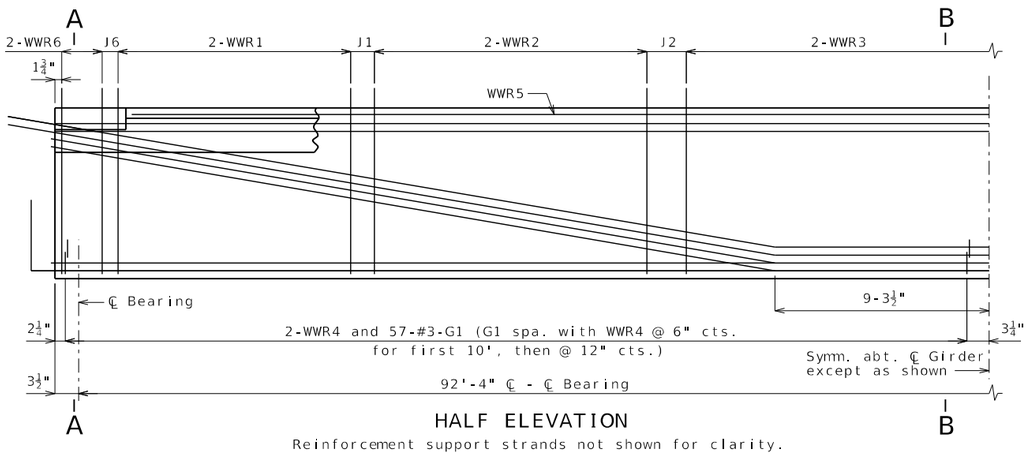

HALF ELEVATION

Reinforcement support strands not shown for clarity.

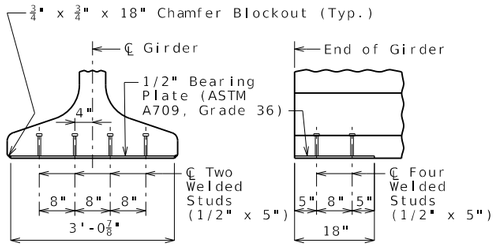

END VIEW SIDE VIEW

BEARING PLATE

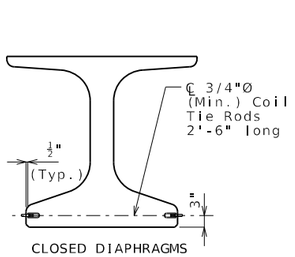

CLOSED DIAPHRAGMS AND INTEGRAL BENTS

COIL TIES

Exclude coil tie at exterior face of exterior girders.

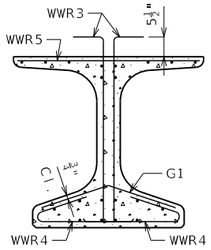

SECTION B-B

Strands not shown for clarity.

Bill of Reinforcing Steel

Bars Each Girder				
No.	Size/Mark		Length	Shape
114	3	G1	2'-10"	8
2	4	G3	3'-10"	20
2	4	G4	2'-3"	20
2	4	G5	2'-8"	20

Welded Wire Each Girder						
Mark	Size	S	W	L		J
WWR1	D31	4"	W12	8'-4"		8"
WWR2	D31	8"	W12	8'-8"		11¾"
WWR3	D31	12"	W12	52'-0"		--
WWR6	D31	2"	W12	16"		4"

Bending Diagrams

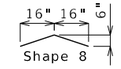

Shape 20

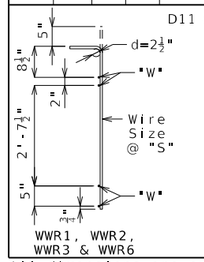

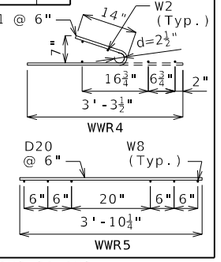

All dimensions are out to out.

Hooks and bends shall be in accordance with the CRSI Manual of Standard Practice for Detailing Reinforced Concrete Structures, Stirrup and Tie Dimensions.

Actual bar lengths are measured along centerline of bar to the nearest inch.

Minimum clearance to reinforcing shall be 1", unless otherwise shown.

All bar reinforcement shall be ASTM A706 Grade 60.

WWR shall not be epoxy coated.

G4 and G5 not required for interior girders. G3 not required for exterior girders of intermediate spans.

General Notes:

Concrete for prestressed beams shall be Class A-1 with f'c = 8000 psi and f'ci = 6500 psi.

Use 38 strands, 0.6"Ø Grade 270, with an initial prestress force of 1669.8 kips.

Pretensioned members shall be in accordance with Sec 1029.

Fabricator shall be responsible for location and design of lifting devices.

Exterior and interior girders are the same except: coil ties and top flange blockout.

The contractor shall provide bracing necessary for lateral and torsional stability of the girders during construction of the concrete slab and remove the bracing after the slab has attained 75% design strength. Contractor shall not drill holes in the girders.

For Girder Camber Diagram, see Sheet No. 29.

For location of coil ties at concrete diaphragms, see Sheet No. 26.

Alternate bar reinforcing steel details are provided and may be used. The same type of reinforcing steel shall be used for all girders in all spans.

NU-GIRDERS - SPAN (2-3)

Detailed September 2025
Checked September 2025

Note: This drawing is not to scale. Follow dimensions.

RYAN DAVID SHAW
NUMBER PE-2011020089
PROFESSIONAL ENGINEER
THIS SHEET HAS BEEN SIGNED, SEALED AND DATED ELECTRONICALLY

DATE PREPARED 4/2/2026
ROUTE I-270 | STATE MO
DISTRICT BR | SHEET NO. 22
COUNTY ST. LOUIS
JOB NO. JSL0021
CONTRACT ID.
PROJECT NO.
BRIDGE NO. A9494

DESCRIPTION | DATE

MISSOURI HIGHWAYS AND TRANSPORTATION COMMISSION
105 WEST CAPITOL
JEFFERSON CITY, MO 65102
1-888-ASK-MODOT (1-888-275-6636)

HDR Engineering, Inc.
1001 Highlands Plaza Drive
Suite 200
St. Louis, MO 63110
314-425-8300
Certificate of Authority: 000856

(1) Fabricator shall apply a bond breaker to this region.

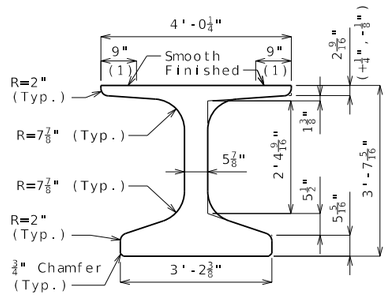

DIMENSIONS

(2) Outer strands tensioned to 2.02 kips/strand and inner strands to 8 kips/strand. Placed symmetrical about ℄ Girder. May be moved laterally in pairs.

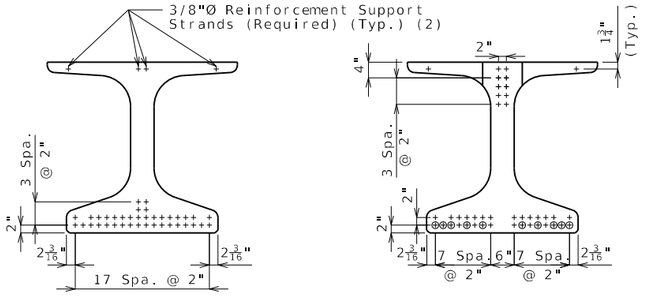

℄ GIRDER END OF GIRDER

STRAND ARRANGEMENT

\+ Indicates prestressing strand.

o Indicates cut & shop bend with 3'-0" projection.

Cut top 2 rows of strands with a 12" projection and bend in shop (Cut any remaining top strands within 1" of end of girder) (Typ.).

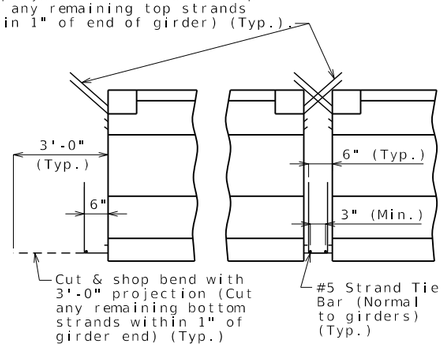

INTERMEDIATE BENT

STRANDS AT GIRDER ENDS

Bill of Reinforcing Steel - Each Girder			
No.	Size/ Mark	Length	Shape
206	5 B1	5'-0"	11S
226	4 D1	4'-0"	9S
2	4 G3	3'-10"	20
2	4 G4	2'-3"	20
2	4 G5	2'-8"	20

Bending Diagrams

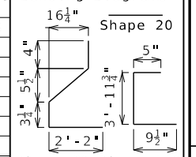

Welded Wire Reinforcement - Each Girder

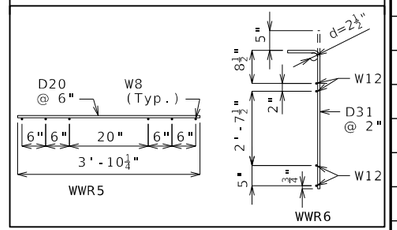

All dimensions are out to out.

Hooks and bends shall be in accordance with the CRSI Manual of Standard Practice for Detailing Reinforced Concrete Structures, Stirrup and Tie Dimensions.

Actual bar lengths are measured along centerline of bar to the nearest inch.

Minimum clearance to reinforcing shall be 1", unless otherwise shown.

All bar reinforcement shall be ASTM A706 Grade 60.

The two D1 bars may be furnished as one bar at the fabricator's option.

All B1 bars shall be epoxy coated.

G4 and G5 not required for interior girders. G3 not required for exterior girders of intermediate spans.

General Notes:

Concrete for prestressed beams shall be Class A-1 with f'c = 8000 psi and f'ci = 6500 psi.

Use 38 strands, 0.6"Ø Grade 270, with an initial prestress force of 1669.8 kips.

Pretensioned members shall be in accordance with Sec 1029.

Fabricator shall be responsible for location and design of lifting devices.

Exterior and interior girders are the same except: coil ties and top flange blockout.

The contractor shall provide bracing necessary for lateral and torsional stability of the girders during construction of the concrete slab and remove the bracing after the slab has attained 75% design strength. Contractor shall not drill holes in the girders.

For Girder Camber Diagram, see Sheet No. 29.

For location of coil ties at concrete diaphragms, see Sheet No. 26.

Alternate bar reinforcing steel details are provided and may be used. The same type of reinforcing steel shall be used for all girders in all spans.

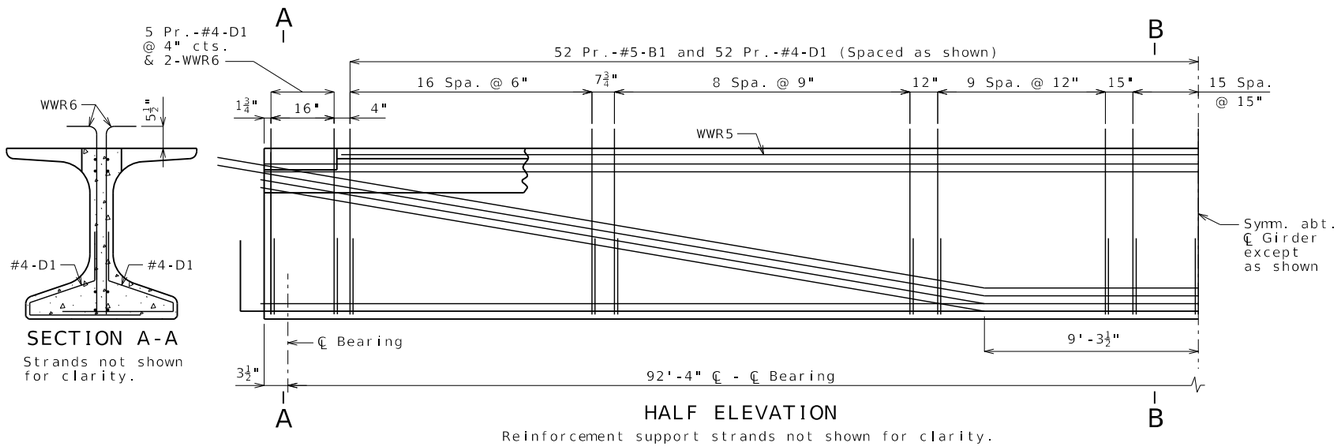

SECTION A-A

Strands not shown for clarity.

HALF ELEVATION

Reinforcement support strands not shown for clarity.

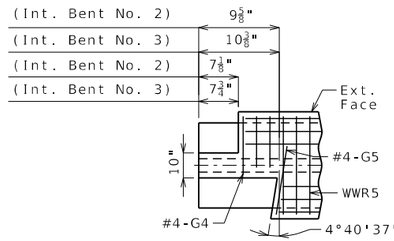

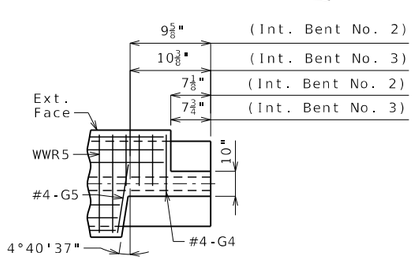

LEFT EXTERIOR GIRDER AT INTERMEDIATE BENT

Rotate 180° for right ext.

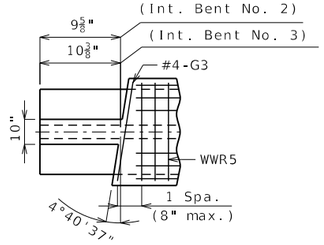

INTERIOR GIRDER AT ALL BENTS

TOP FLANGE BLOCKOUT

Mirror for right advanced.

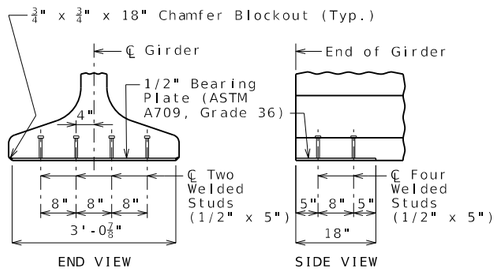

BEARING PLATE

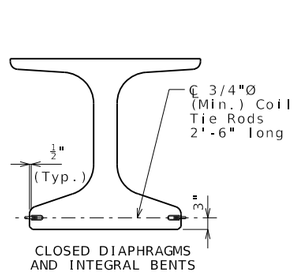

CLOSED DIAPHRAGMS AND INTEGRAL BENTS

COIL TIES

Exclude coil tie at exterior face of exterior girders.

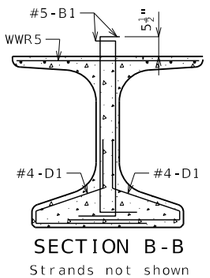

SECTION B-B

Strands not shown for clarity.

NU-GIRDERS (ALTERNATE REINFORCEMENT) - SPAN (2-3)

Detailed September 2025
Checked September 2025

Note: This drawing is not to scale. Follow dimensions.

c:\pwworking\central01\d4975500\B_A9494_023_SL0021.dgn 12:33:51 PM 4/2/2026

STATE OF MISSOURI
RYAN DAVID SHAW
NUMBER PE-2011000269
PROFESSIONAL ENGINEER
THIS SHEET HAS BEEN SIGNED, SEALED AND DATED ELECTRONICALLY

DATE PREPARED 4/2/2026

ROUTE	STATE
I-270	MO
DISTRICT	SHEET NO.
BR	23

COUNTY: ST. LOUIS
JOB NO.: JSL0021
CONTRACT ID.:
PROJECT NO.:
BRIDGE NO.: A9494

DESCRIPTION | DATE

MISSOURI HIGHWAYS AND TRANSPORTATION COMMISSION
105 WEST CAPITOL
JEFFERSON CITY, MO 65102
1-888-ASK-MODOT (1-888-275-6636)
HDR Engineering, Inc.
1001 Highlands Plaza Drive
Suite 200
St. Louis, MO 63110
314-425-8300
Certificate of Authority: 000856

(1) Fabricator shall apply a bond breaker to this region.

(2) Outer strands tensioned to 2.02 kips/strand and inner strands to 8 kips/strand. Placed symmetrical about ℄ Girder. May be moved laterally in pairs.

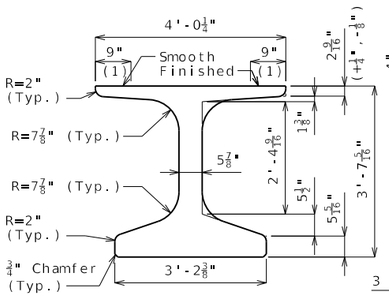

DIMENSIONS

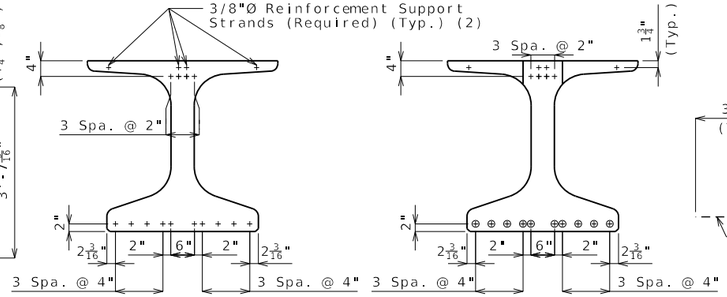

℄ GIRDER END OF GIRDER

STRAND ARRANGEMENT

\+ Indicates prestressing strand.

o Indicates cut & shop bend with 3'-0" projection.

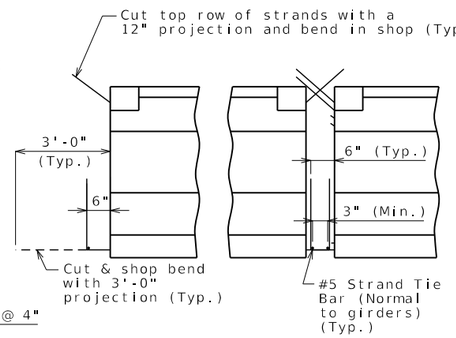

END BENT INTERMEDIATE BENT

STRANDS AT GIRDER ENDS

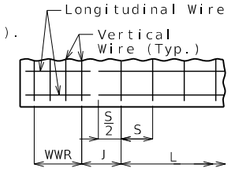

WELDED WIRE PLACEMENT

S = Vertical wire spacing

L = Length of WWR mats

J = Distance between WWR mats

Bill of Reinforcing Steel

Bars Each Girder				
No.	Size/Mark		Length	Shape
64	3	G1	2'-10"	8
2	4	G3	3'-10"	20
2	4	G4	2'-3"	20
2	4	G5	2'-8"	20

Welded Wire Each Girder					
Mark	Size	S	W	L	J
WWR1	D31	4"	W12	3'-8"	8"
WWR2	D31	8"	W12	4'-0"	10¼"
WWR3	D31	12"	W12	20'-0"	--
WWR6	D31	2"	W12	16"	4"

Bending Diagrams

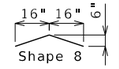

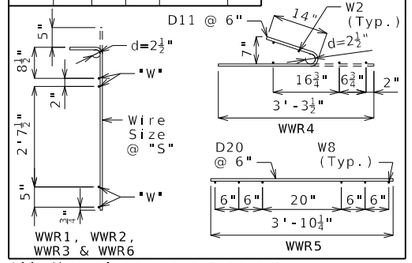

All dimensions are out to out.

Hooks and bends shall be in accordance with the CRSI Manual of Standard Practice for Detailing Reinforced Concrete Structures, Stirrup and Tie Dimensions.

Actual bar lengths are measured along centerline of bar to the nearest inch.

Minimum clearance to reinforcing shall be 1", unless otherwise shown.

All bar reinforcement shall be ASTM A706 Grade 60.

WWR shall not be epoxy coated.

G4 and G5 not required for interior girders. Half no. of G3, G4 and G5 not required for ext. girders of end spans.

General Notes:

Concrete for prestressed beams shall be Class A-1 with f'c = 8000 psi and f'ci = 6500 psi.

Use 14 strands, 0.6"Ø Grade 270, with an initial prestress force of 615.2 kips.

Pretensioned members shall be in accordance with Sec 1029.

Fabricator shall be responsible for location and design of lifting devices.

Exterior and interior girders are the same except: coil ties and top flange blockout.

The contractor shall provide bracing necessary for lateral and torsional stability of the girders during construction of the concrete slab and remove the bracing after the slab has attained 75% design strength. Contractor shall not drill holes in the girders.

For Girder Camber Diagram, see Sheet No. 29.

For location of coil ties at concrete diaphragms and integral bents, see Sheets No. 16, 17, and 26.

Alternate bar reinforcing steel details are provided and may be used. The same type of reinforcing steel shall be used for all girders in all spans.

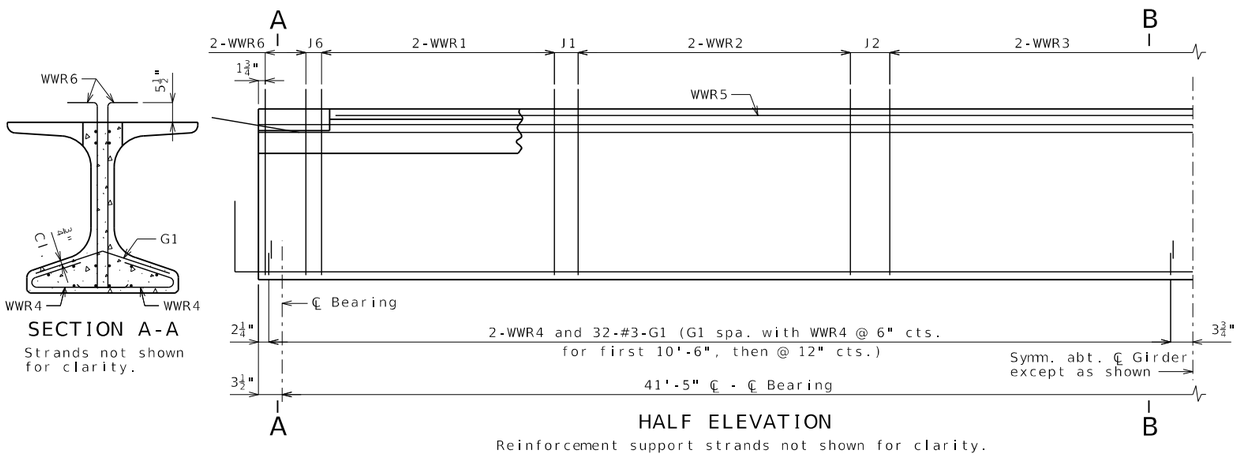

SECTION A-A

Strands not shown for clarity.

HALF ELEVATION

Reinforcement support strands not shown for clarity.

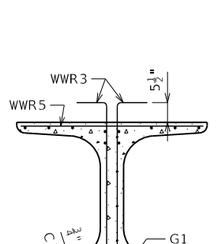

SECTION B-B

Strands not shown for clarity.

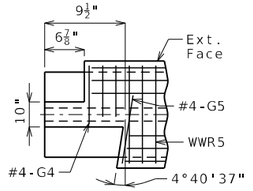

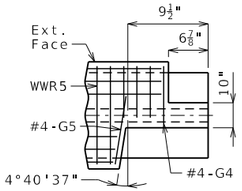

LEFT EXTERIOR GIRDER AT INTERMEDIATE BENT

Rotate 180° for right ext.

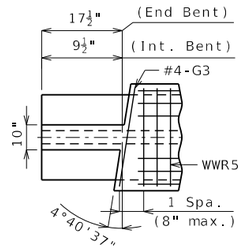

INTERIOR GIRDER AT ALL BENTS & EXTERIOR GIRDER AT END BENT

TOP FLANGE BLOCKOUT

Mirror for right advanced.

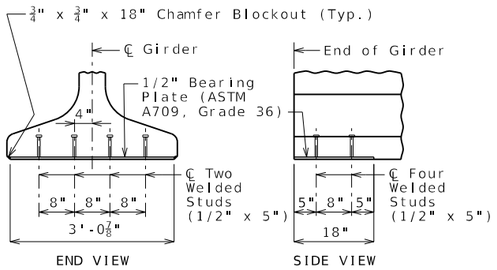

END VIEW SIDE VIEW

BEARING PLATE

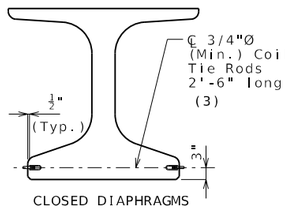

CLOSED DIAPHRAGMS AND INTEGRAL BENTS

COIL TIES

Exclude coil tie at exterior face of exterior girders except at integral end bents.

(3) 2'-5" at exterior face of exterior girders at end bents

NU-GIRDERS - SPAN (3-4)

Detailed September 2025
Checked September 2025

Note: This drawing is not to scale. Follow dimensions.

RYAN DAVID SHAW
NUMBER PE-2011030369
PROFESSIONAL ENGINEER
STATE OF MISSOURI
THIS SHEET HAS BEEN SIGNED, SEALED AND DATED ELECTRONICALLY

DATE PREPARED 4/2/2026
ROUTE I-270 | STATE MO
DISTRICT BR | SHEET NO. 24
COUNTY ST. LOUIS
JOB NO. JSL0021
CONTRACT ID.
PROJECT NO.
BRIDGE NO. A9494

DESCRIPTION | DATE

MISSOURI HIGHWAYS AND TRANSPORTATION COMMISSION
105 WEST CAPITOL
JEFFERSON CITY, MO 65102
1-888-ASK-MODOT (1-888-275-6636)

HDR Engineering, Inc.
1001 Highlands Plaza Drive
Suite 200
St. Louis, MO 63110
314-425-8300
Certificate of Authority: 000856

(1) Fabricator shall apply a bond breaker to this region.

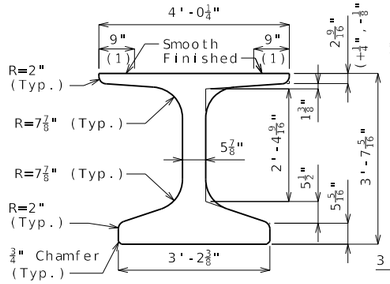

DIMENSIONS

(2) Outer strands tensioned to 2.02 kips/strand and inner strands to 8 kips/strand. Placed symmetrical about ℄ Girder. May be moved laterally in pairs.

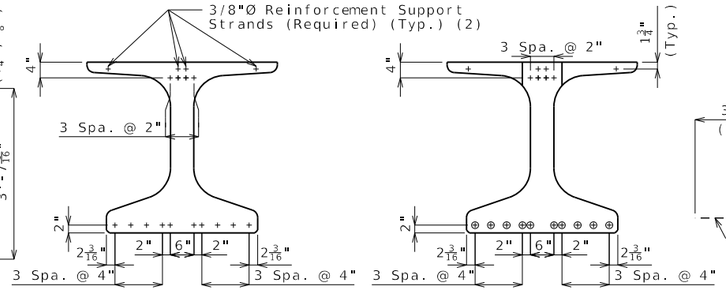

℄ GIRDER END OF GIRDER

STRAND ARRANGEMENT

\+ Indicates prestressing strand.

o Indicates cut & shop bend with 3'-0" projection.

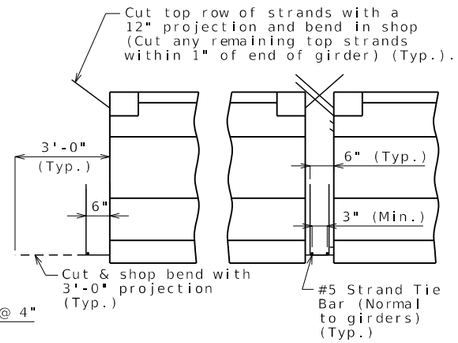

END BENT INTERMEDIATE BENT

STRANDS AT GIRDER ENDS

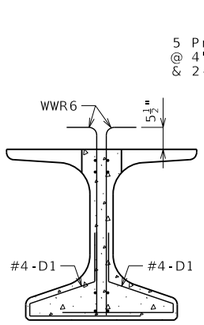

SECTION A-A

Strands not shown for clarity.

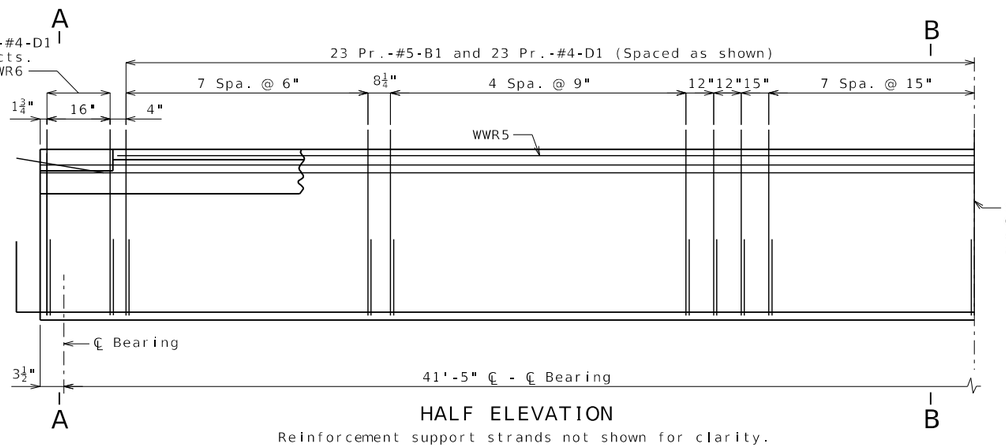

HALF ELEVATION

Reinforcement support strands not shown for clarity.

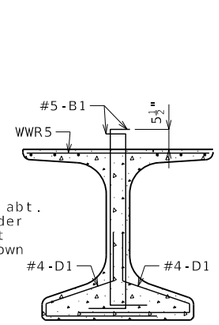

SECTION B-B

Strands not shown for clarity.

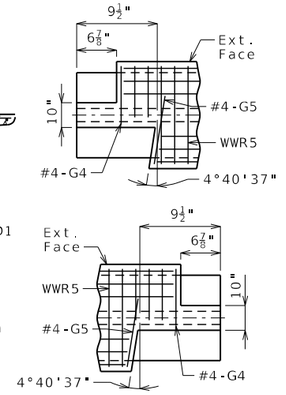

LEFT EXTERIOR GIRDER AT INTERMEDIATE BENT

Rotate 180° for right ext.

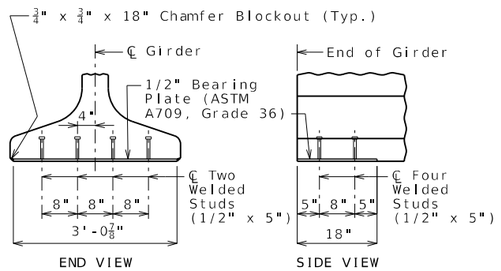

BEARING PLATE

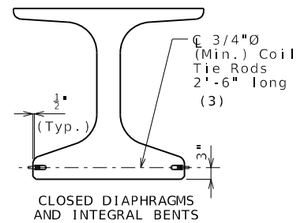

COIL TIES

Exclude coil tie at exterior face of exterior girders except at integral end bents.

(3) 2'-5" at exterior face of exterior girders at end bents

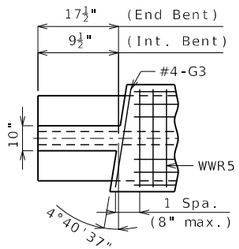

INTERIOR GIRDER AT ALL BENTS & EXTERIOR GIRDER AT END BENT

TOP FLANGE BLOCKOUT

Mirror for right advanced.

Bill of Reinforcing Steel - Each Girder			
No.	Size/ Mark	Length	Shape
90	5 B1	5'-0"	11S
110	4 D1	4'-0"	9S
2	4 G3	3'-10"	20
2	4 G4	2'-3"	20
2	4 G5	2'-8"	20

Bending Diagrams

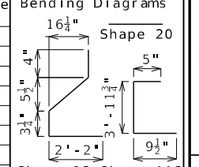

Welded Wire Reinforcement - Each Girder

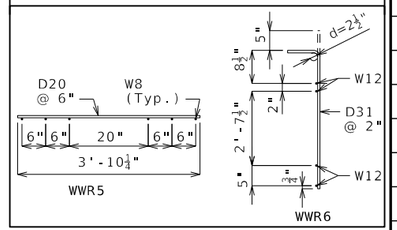

All dimensions are out to out.

Hooks and bends shall be in accordance with the CRSI Manual of Standard Practice for Detailing Reinforced Concrete Structures, Stirrup and Tie Dimensions.

Actual bar lengths are measured along centerline of bar to the nearest inch.

Minimum clearance to reinforcing shall be 1", unless otherwise shown.

All bar reinforcement shall be ASTM A706 Grade 60.

The two D1 bars may be furnished as one bar at the fabricator's option.

All B1 bars shall be epoxy coated.

G4 and G5 not required for interior girders. Half no. of G3, G4, and G5 not required for ext. girders of end spans.

General Notes:

Concrete for prestressed beams shall be Class A-1 with f'c = 8000 psi and f'ci = 6500 psi.

Use 14 strands, 0.6"Ø Grade 270, with an initial prestress force of 615.2 kips.

Pretensioned members shall be in accordance with Sec 1029.

Fabricator shall be responsible for location and design of lifting devices.

Exterior and interior girders are the same except: coil ties and top flange blockout.

The contractor shall provide bracing necessary for lateral and torsional stability of the girders during construction of the concrete slab and remove the bracing after the slab has attained 75% design strength.Contractor shall not drill holes in the girders.

For Girder Camber Diagram, see Sheet No. 29.

For location of coil ties at concrete diaphragms and integral bents, see Sheets No. 16, 17, and 26.

Alternate bar reinforcing steel details are provided and may be used. The same type of reinforcing steel shall be used for all girders in all spans.

STATE OF MISSOURI
RYAN DAVID SHAW
NUMBER PE-2011002089
PROFESSIONAL ENGINEER
THIS SHEET HAS BEEN SIGNED, SEALED AND DATED ELECTRONICALLY

DATE PREPARED 4/2/2026

ROUTE I-270 | STATE MO

DISTRICT BR | SHEET NO. 25

COUNTY ST. LOUIS

JOB NO. JSL0021

CONTRACT ID.

PROJECT NO.

BRIDGE NO. A9494

DESCRIPTION	DATE

MISSOURI HIGHWAYS AND TRANSPORTATION COMMISSION
105 WEST CAPITOL
JEFFERSON CITY, MO 65102
1-888-ASK-MODOT (1-888-275-6636)

HDR Engineering, Inc.
1001 Highlands Plaza Drive
Suite 200
St. Louis, MO 63110
314-425-8300
Certificate of Authority: 000856

NU-GIRDERS (ALTERNATE REINFORCEMENT) - SPAN (3-4)

Detailed September 2025
Checked September 2025

Note: This drawing is not to scale. Follow dimensions.

c:\pwworking\central01\d4975500\B_A9494_025_SL0021.dgn 12:34:06 PM 4/2/2026

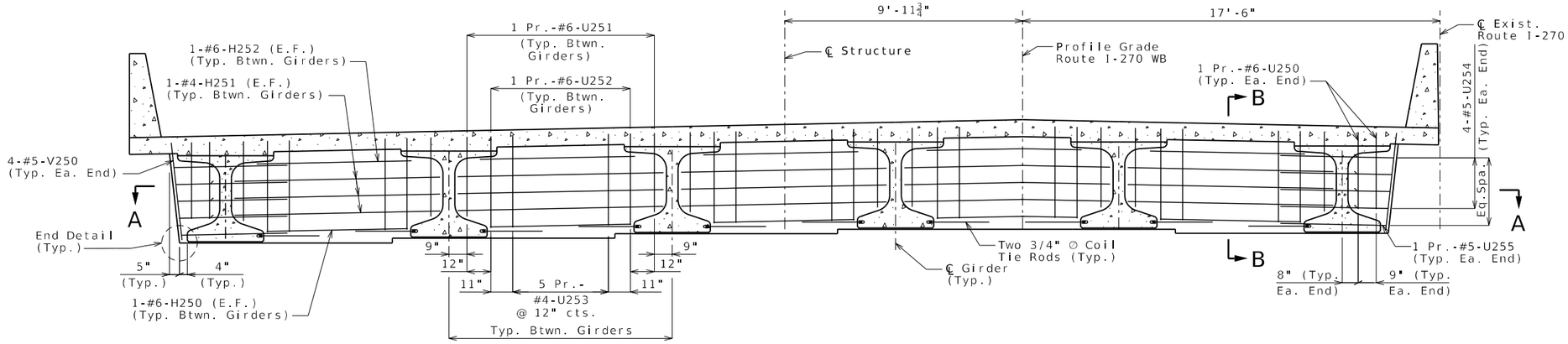

SECTION NEAR INTERMEDIATE BENT
(Looking Ahead Station)
(Normal to ℄ Structure)

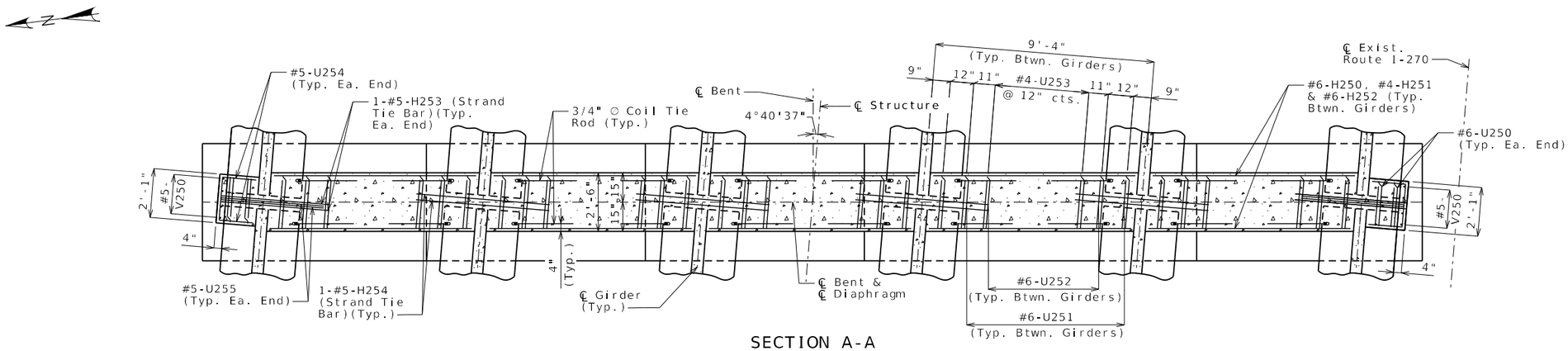

SECTION A-A

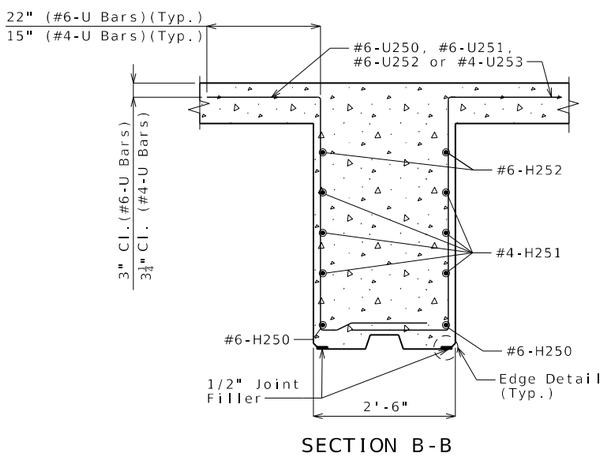

SECTION B-B

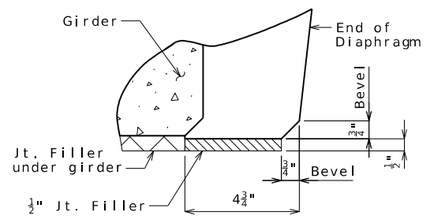

END DETAIL

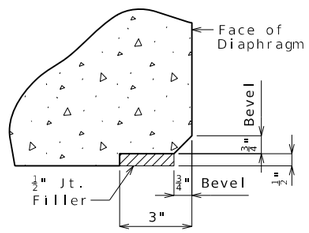

EDGE DETAIL

Notes:

Intermediate Bent No. 2 reinforcement shown. For Intermediate Bent No. 3 reinforcement, change to 300 series bars.

Diaphragm at Intermediate Bents shall be built vertical.

The concrete diaphragm at the Intermediate Bents shall be poured a minimum of 30 minutes and a maximum of 2 hours before the slab is poured.

For location of strand tie bars and details of coil tie rods, see Sheets No. 20 thru 25.

All U-bars in diaphragm are to be placed parallel to centerline of roadway.

DIAPHRAGM DETAILS AT INTERMEDIATE BENTS NO. 2 & 3

Detailed September 2025
Checked September 2025

Note: This drawing is not to scale. Follow dimensions.

STATE OF MISSOURI
RYAN DAVID SHAW
NUMBER PE-2017000380
PROFESSIONAL ENGINEER
THIS SHEET HAS BEEN SIGNED, SEALED AND DATED ELECTRONICALLY

DATE PREPARED	4/2/2026
ROUTE	I-270
STATE	MO
DISTRICT	BR
SHEET NO.	26
COUNTY	ST. LOUIS
JOB NO.	JSL0021
CONTRACT ID.	
PROJECT NO.	
BRIDGE NO.	A9494

DESCRIPTION

DATE

MISSOURI HIGHWAYS AND TRANSPORTATION COMMISSION
105 WEST CAPITOL
JEFFERSON CITY, MO 65102
1-888-ASK-MODOT (1-888-275-6636)

HDR Engineering, Inc.
1001 Highlands Plaza Drive
Suite 200
St. Louis, MO 63110
314-425-8300
Certificate of Authority: 000856

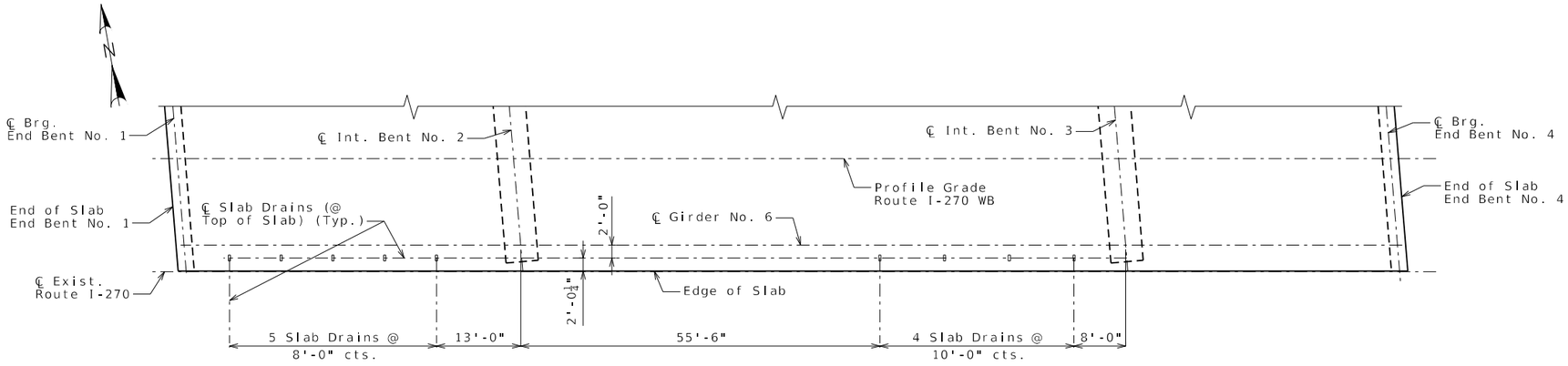

PART PLAN OF SLAB SHOWING SLAB DRAIN LOCATIONS

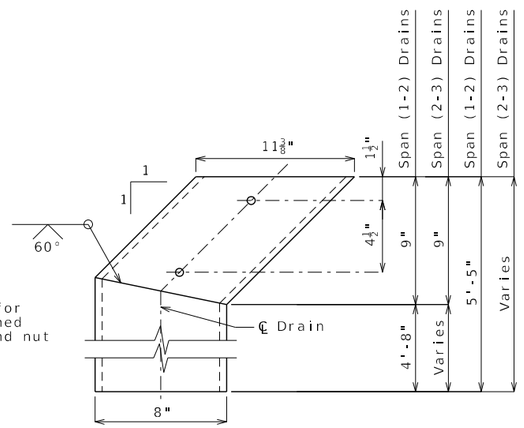

ELEVATION OF DRAIN

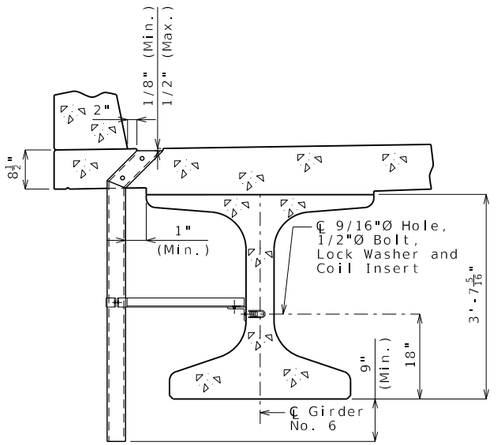

PART SECTION NEAR DRAIN AT SPAN (1-2)

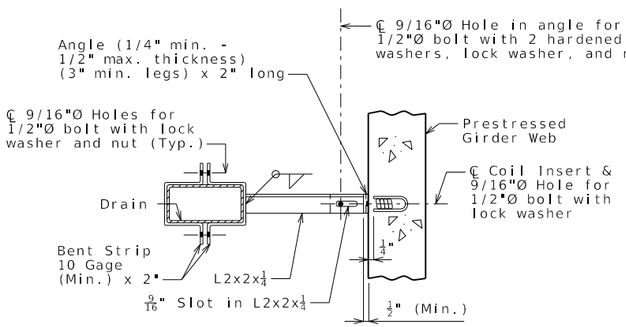

PART SECTION SHOWING BRACKET ASSEMBLY

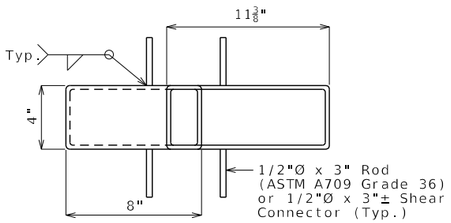

PLAN OF STEEL DRAIN OPTION

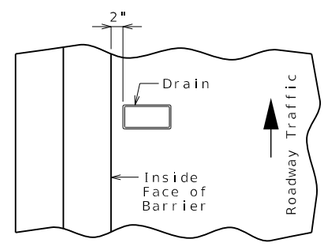

PART PLAN OF SLAB AT DRAIN

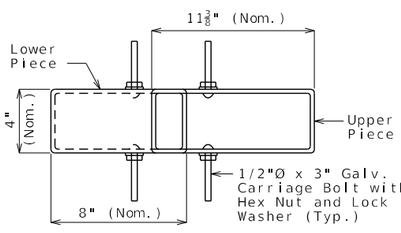

PLAN OF FRP DRAIN OPTION

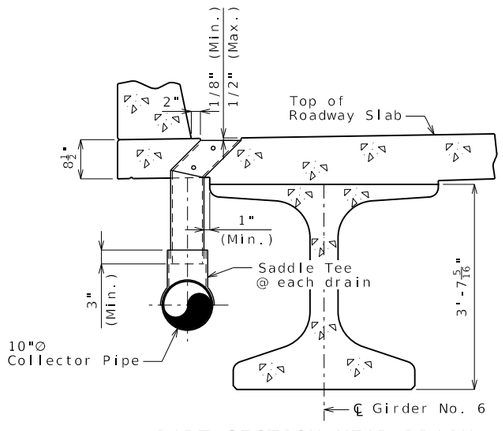

PART SECTION NEAR DRAIN AT SPAN (2-3)

General Notes:

Contractor shall have the option to construct either steel or FRP slab drains. All drains shall be of same type.

Slab drain bracket assembly shall be ASTM A709 Grade 36 steel.

Locate drains in slab by dimensions shown in Part Section Near Drain.

Reinforcing steel shall be shifted to clear drains.

The coil inserts and bracket assembly shall be galvanized in accordance with ASTM A123.

All bolts, hardened washers, lock washers and nuts shall be galvanized in accordance with AASHTO M 232 (ASTM A153), Class C.

All 1/2"Ø bolts shall be ASTM A307.

Shop drawings will not be required for the slab drains and the bracket assembly.

The coil insert required for the bracket assembly attachment shall be located on the prestressed girder shop drawings.

Coil inserts shall have a concrete pull-out strength (ultimate load) of at least 2,500 pounds in 5,000 psi concrete.

The bolt required to attach the slab drain bracket assembly to the prestressed girder web shall be supplied by the prestressed girder fabricator.

For Drainage System (On Structure) details, see Sheet No. 28.

Notes for Steel Drain:

Slab drains may be fabricated of either 1/4" welded sheets of ASTM A709 Grade 36 steel or from 1/4" structural steel tubing ASTM A500 or A501.

Outside dimensions of drains are 8" x 4".

The drains shall be galvanized in accordance with ASTM A123.

Notes for FRP Drain:

Drains shall be machine filament-wound thermosetting resin tubing meeting the requirements of ASTM D2996 with the following exceptions:

Shape of drains shall be rectangular with outside nominal dimensions of 8" x 4".

Minimum reinforced wall thickness shall be 1/4 inch.

The resin used shall be ultraviolet (UV) resistant and/or have UV inhibitors mixed throughout. Drains may have an exterior coating for additional UV resistance.

The color of the slab drain shall be gray (Federal Standard #26373). The color shall be uniform throughout the resin and any coating used.

The combination of materials used in the manufacture of the drains shall be tested for UV resistance in accordance with ASTM D4329 Cycle A. The representative material shall withstand at least 500 hours of testing with only minor discoloration and without any physical deterioration. The contractor shall furnish the results of the required ultraviolet testing prior to acceptance of the slab drains.

At the contractor's option, drains may be field cut. The method of cutting FRP slab drain shall be as recommended by the manufacturer to ensure a smooth, chip free cut.

Both upper and lower drain pieces shall be rigidly connected to each other. Drain flow shall not be obstructed. Approval of the engineer is required.

STATE OF MISSOURI
RYAN DAVID SHAW
NUMBER PE-2011020369
PROFESSIONAL ENGINEER
THIS SHEET HAS BEEN SIGNED, SEALED AND DATED ELECTRONICALLY

DATE PREPARED 4/2/2026

ROUTE	STATE
I-270	MO
DISTRICT	SHEET NO.
BR	27

COUNTY ST. LOUIS

JOB NO. JSL0021

CONTRACT ID.

PROJECT NO.

BRIDGE NO. A9494

DATE	DESCRIPTION

MISSOURI HIGHWAYS AND TRANSPORTATION COMMISSION
105 WEST CAPITOL
JEFFERSON CITY, MO 65102
1-888-ASK-MODOT (1-888-275-6636)
HDR Engineering, Inc.
1001 Highlands Plaza Drive
Suite 200
St. Louis, MO 63110
314-425-8300
Certificate of Authority: 000856

SLAB DRAINS

Detailed September 2025
Checked September 2025

Note: This drawing is not to scale. Follow dimensions.

c:\pwworking\central01\d4975500\B_A9494_027_SL0021.dgn 12:34:20 PM 4/2/2026

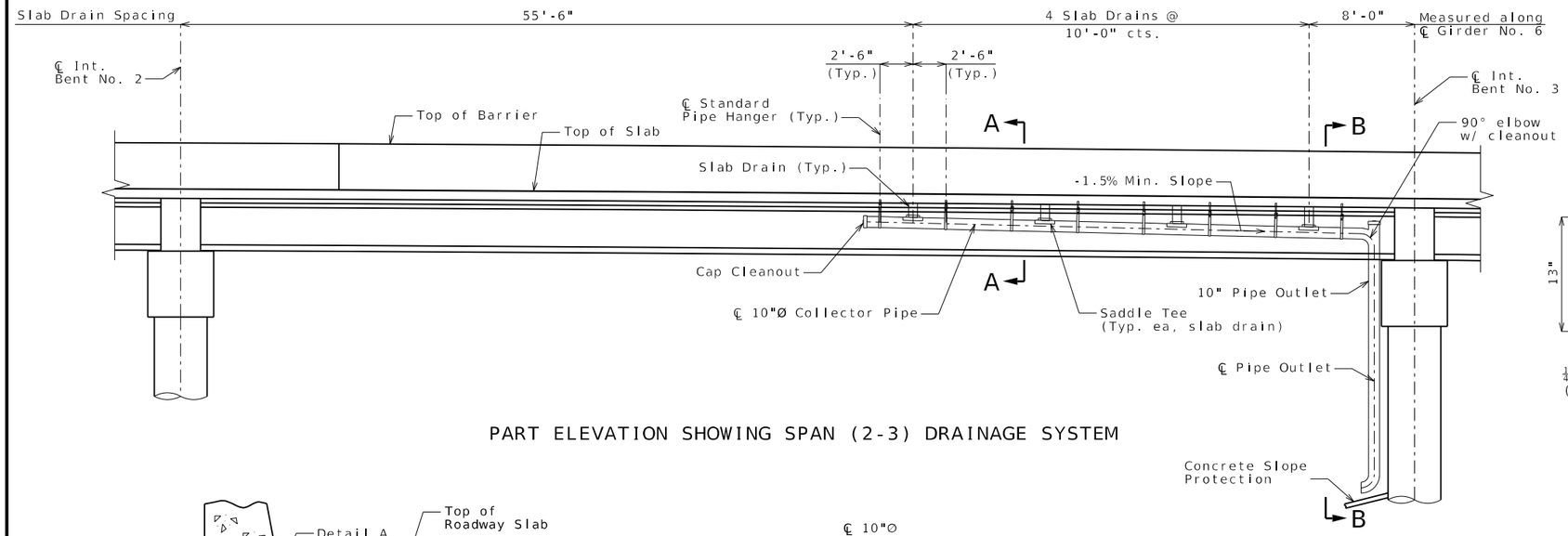

PART ELEVATION SHOWING SPAN (2-3) DRAINAGE SYSTEM

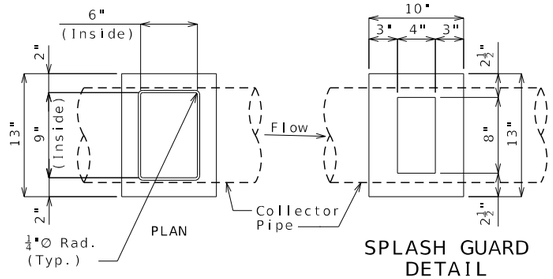

SPLASH GUARD DETAIL

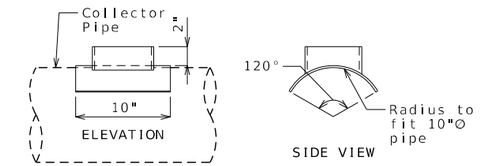

OUTLET SADDLE DETAILS

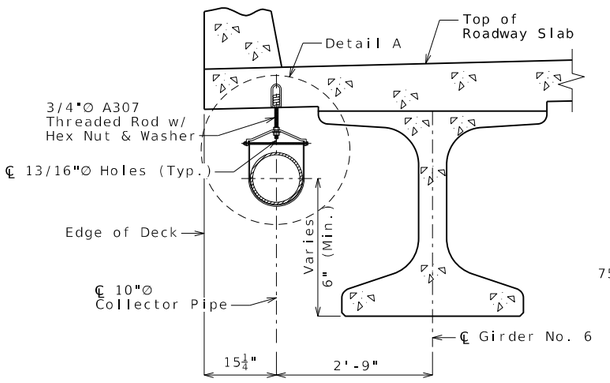

SECTION A-A

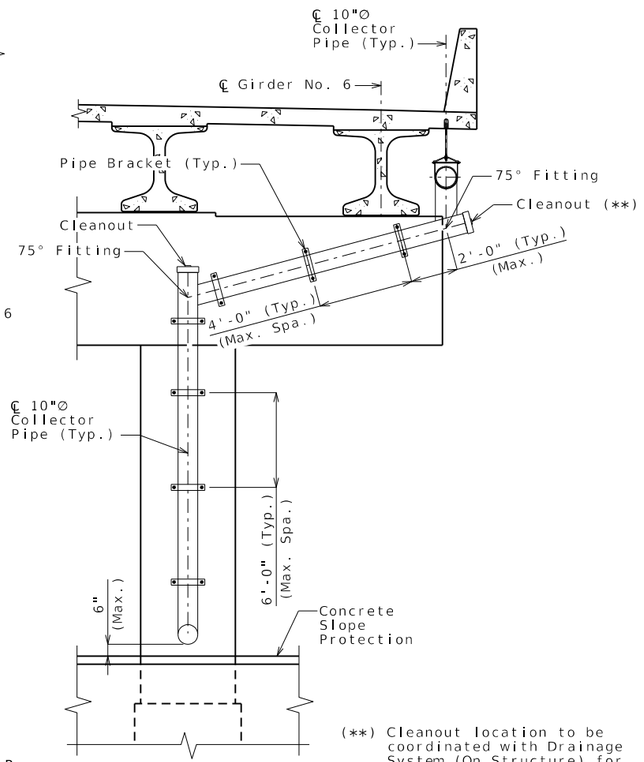

VIEW B-B
(Looking Ahead Station)

(**) Cleanout location to be coordinated with Drainage System (On Structure) for Bridge No. A9493.

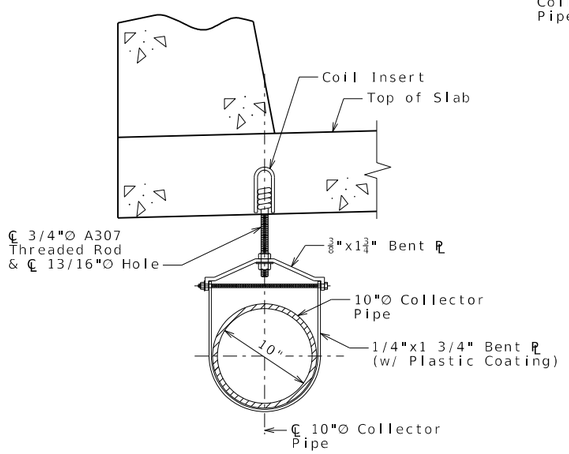

DETAIL A

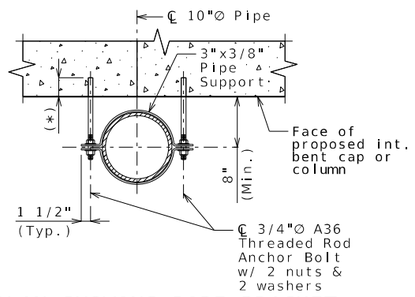

PLAN SHOWING PIPE BRACKET

(*) Anchor rod embedment based on manufacturer's recommendation. Contractor to avoid reinforcement in int. bent cap and column when installing pipe supports.

Notes:

All pipes, elbows, saddles, fittings, guards and all other drainage components shall be Reinforced Thermosetting Resin Pipe (RTRP), see Special Provisions.

Furnishing, fabricating and erecting drain pipes, fittings, saddles, guards, pipe supports, bolts and other miscellaneous items will be considered completely covered by the Contract Lump Sum Price for Drainage System (On Structure).

Piping shall be fabricated from field checked dimensions after installation of slab drains.

Provide cleanouts with a male threaded PVC plug where shown on the plans.

The color of the Reinforced Thermosetting Resin Pipe (RTRP) collection system shall be gray (Federal Standard 26373). The color shall be uniform throughout the resin and any coating used.

Coil inserts shall have a concrete pull-out strength (ultimate load) of at least 2,500 pounds in 4,000 psi concrete.

Pipe hanger assembly shall be ASTM A709 Grade 36 steel.

Standard Pipe Hangers shall be placed along ℄ 10" dia. Collector Pipe, spaced longitudinally as shown in Elevation.

Drain, saddle tee and collector pipe shall be rigidly connected to each other. Drain flow shall not be obstructed. Approval of the engineer is required.

All coil inserts, bolts, hardened washers, lock washers and nuts shall be galvanized in accordance with AASHTO M 232 (ASTM A153), Class C.

DRAINAGE SYSTEM (ON STRUCTURE)

Detailed September 2025
Checked September 2025

Note: This drawing is not to scale. Follow dimensions.

STATE OF MISSOURI
RYAN DAVID SHAW
NUMBER PE-2011000369
PROFESSIONAL ENGINEER
THIS SHEET HAS BEEN SIGNED, SEALED AND DATED ELECTRONICALLY

DATE PREPARED 4/2/2026
ROUTE I-270 | STATE MO
DISTRICT BR | SHEET NO. 28
COUNTY ST. LOUIS
JOB NO. JSL0021
CONTRACT ID.
PROJECT NO.
BRIDGE NO. A9494

DESCRIPTION | DATE

MISSOURI HIGHWAYS AND TRANSPORTATION COMMISSION
105 WEST CAPITOL
JEFFERSON CITY, MO 65102
1-888-ASK-MODOT (1-888-275-6636)

HDR Engineering, Inc.
1001 Highlands Plaza Drive
Suite 200
St. Louis, MO 63110
314-425-8300
Certificate of Authority: 000856

c:\pwworking\central01\d4975500\B_A9494_028_SL0021.dgn 12:34:26 PM 4/2/2026

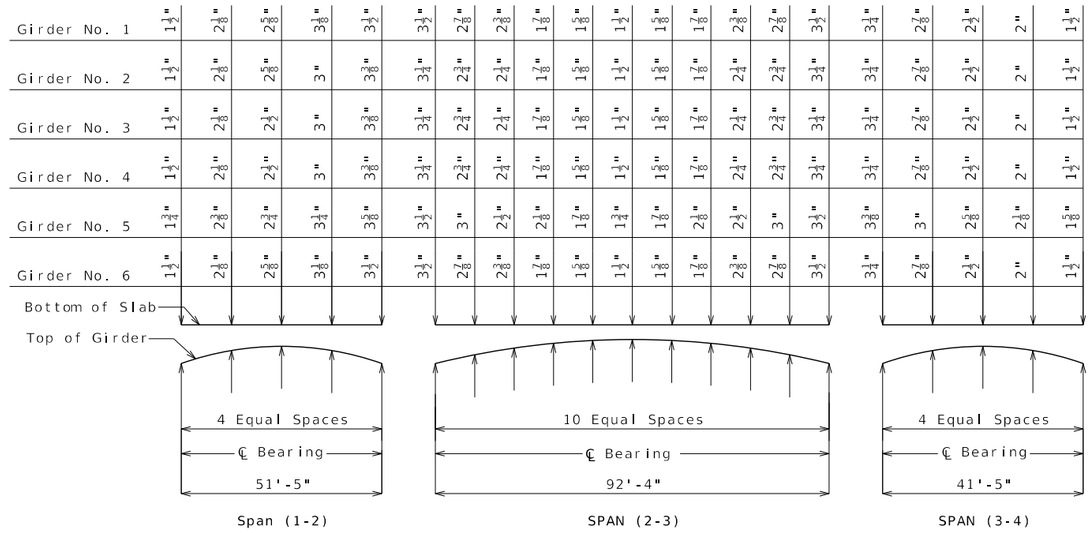

THEORETICAL SLAB HAUNCHING DIAGRAM

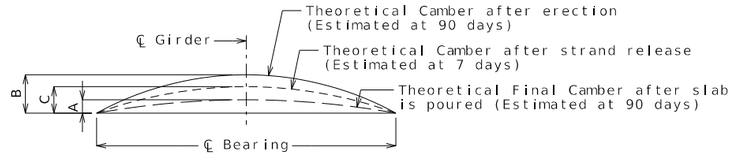

Girder	Span (1-2)			Span (2-3)			Span (3-4)		
	A	B	C	A	B	C	A	B	C
Ext. Girder	1/8"	1/4"	1/4"	2 1/2"	4 3/8"	3"	1/8"	1/8"	1/8"
Int. Girder	1/8"			2 3/8"			1/8"		

GIRDER CAMBER DIAGRAM

Conversion Factors for Girder Camber (Estimated at 90 days):

0.25 pt. = 0.7125 x 0.5 pt. - Span (1-2) & Span (3-4)

0.1 pt. = 0.314 x 0.5 pt.
0.2 pt. = 0.593 x 0.5 pt.
0.3 pt. = 0.813 x 0.5 pt.
0.4 pt. = 0.952 x 0.5 pt.
- Span (2-3)

Theoretical Bottom of Slab Elevations at Centerline of Girder (Prior to forming for slab) (Estimated at 90 days)

Girder Number	Span (1-2) (51'-5" ℄ Brg. - ℄ Brg.)				
	℄ Brg.	.25	.50	.75	℄ Brg.
1	501.01	501.00	500.98	500.93	500.87
2	501.20	501.19	501.16	501.11	501.05
3	501.39	501.37	501.35	501.30	501.24
4	501.57	501.56	501.53	501.48	501.42
5	501.60	501.58	501.56	501.51	501.44
6	501.41	501.40	501.37	501.32	501.25

Girder Number	Span (2-3) (92'-4" ℄ Brg. - ℄ Brg.)										
	℄ Brg.	.10	.20	.30	.40	.50	.60	.70	.80	.90	℄ Brg.
1	500.86	500.87	500.86	500.84	500.81	500.75	500.67	500.57	500.46	500.33	500.18
2	501.05	501.05	501.05	501.03	501.00	500.94	500.86	500.76	500.64	500.51	500.36
3	501.23	501.24	501.24	501.22	501.18	501.12	501.04	500.94	500.82	500.69	500.54
4	501.41	501.42	501.42	501.40	501.36	501.30	501.22	501.12	501.00	500.87	500.72
5	501.44	501.44	501.44	501.42	501.38	501.32	501.24	501.14	501.02	500.88	500.74
6	501.25	501.25	501.24	501.22	501.18	501.12	501.04	500.94	500.82	500.69	500.54

Girder Number	Span (3-4) (41'-5" ℄ Brg. - ℄ Brg.)				
	℄ Brg.	.25	.50	.75	℄ Brg.
1	500.17	500.07	499.95	499.83	499.69
2	500.35	500.24	500.13	500.00	499.87
3	500.53	500.42	500.31	500.18	500.05
4	500.71	500.60	500.49	500.36	500.22
5	500.73	500.62	500.50	500,38	500.24
6	500.53	500.42	500.31	500.18	500.04

Elevations are based on a constant slab thickness of 8 1/2" and include allowance for theoretical dead load deflections due to weight of slab and Type D barriers.

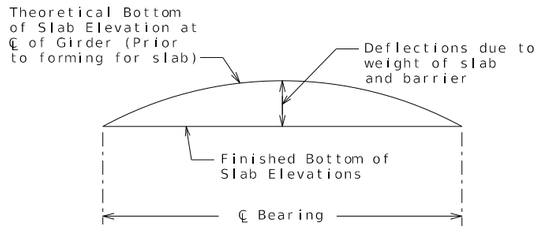

TYPICAL SLAB ELEVATIONS DIAGRAM

Notes:

If girder camber is different from that shown in the camber diagram, in order to maintain minimum slab thickness, an adjustment of the slab haunches, an increase in slab thickness or a raise in grade uniformly throughout the structure shall be necessary. The haunch shall be limited to ensure the projecting girder reinforcement is embedded into slab at least 2 inches. No payment will be made for additional labor or materials required for variation in haunching, slab thickness or grade adjustment.

Concrete in the slab haunches is included in the Estimated Quantities for Slab on Concrete NU-Girder.

CAMBER, SLAB ELEVATIONS AND HAUNCHING

Detailed September 2025
Checked September 2025

Note: This drawing is not to scale. Follow dimensions.

STATE OF MISSOURI
RYAN DAVID SHAW
NUMBER PE-2011000369
PROFESSIONAL ENGINEER
THIS SHEET HAS BEEN SIGNED, SEALED AND DATED ELECTRONICALLY

DATE PREPARED 4/2/2026
ROUTE I-270 | STATE MO
DISTRICT BR | SHEET NO. 29
COUNTY ST. LOUIS
JOB NO. JSL0021
CONTRACT ID.
PROJECT NO.
BRIDGE NO. A9494

DESCRIPTION | DATE

MISSOURI HIGHWAYS AND TRANSPORTATION COMMISSION
105 WEST CAPITOL
JEFFERSON CITY, MO 65102
1-888-ASK-MODOT (1-888-275-6636)

HDR Engineering, Inc.
1001 Highlands Plaza Drive
Suite 200
St. Louis, MO 63110
314-425-8300
Certificate of Authority: 000856

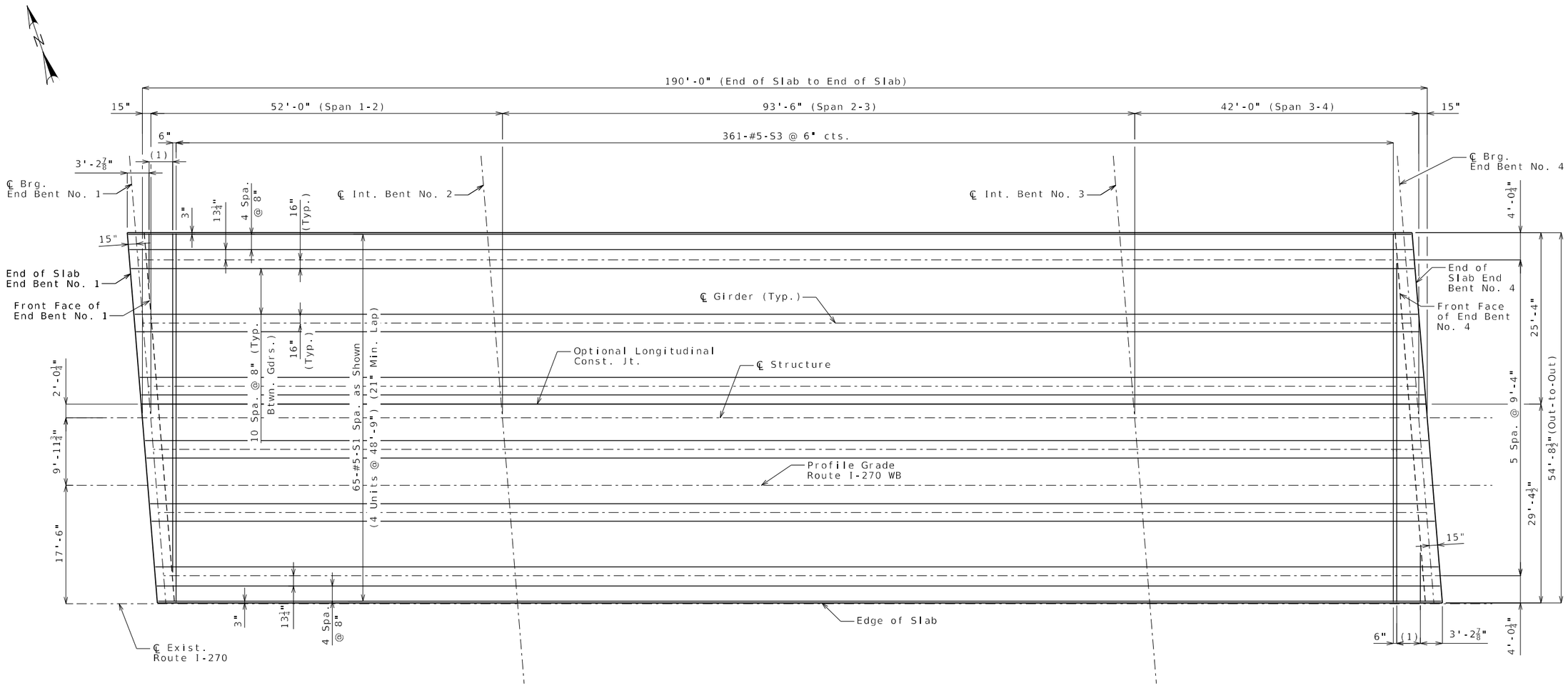

(1) 8-#5-S2 @ 6" cts.

Notes:

Longitudinal slab dimensions are measured horizontally.

For Typical Slab Section and Slab Pouring Sequence, see Sheet No. 32.

For details and reinforcement of Type D Barrier not shown, see Sheets No. 33 & 34.

For Theoretical Slab Haunching Diagram and Theoretical Bottom of Slab Elevations, see Sheet No. 29.

For Staging Plans, see Sheets No. 4 thru 6.

For location of coil inserts for pipe hangers, see Sheet No. 28.

PLAN OF SLAB REINFORCEMENT - BOTTOM

Detailed September 2025
Checked September 2025

Note: This drawing is not to scale. Follow dimensions.

STATE OF MISSOURI
RYAN DAVID SHAW
NUMBER PE-2011000369
PROFESSIONAL ENGINEER

THIS SHEET HAS BEEN SIGNED, SEALED AND DATED ELECTRONICALLY

DATE PREPARED
4/2/2026

ROUTE	STATE
I-270	MO
DISTRICT	SHEET NO.
BR	30

COUNTY
ST. LOUIS

JOB NO.
JSL0021

CONTRACT ID.

PROJECT NO.

BRIDGE NO.
A9494

DESCRIPTION	DATE

MISSOURI HIGHWAYS AND TRANSPORTATION COMMISSION

105 WEST CAPITOL
JEFFERSON CITY, MO 65102
1-888-ASK-MODOT (1-888-275-6636)

HDR Engineering, Inc.
1001 Highlands Plaza Drive
Suite 200
St. Louis, MO 63110
314-425-8300
Certificate of Authority: 000856

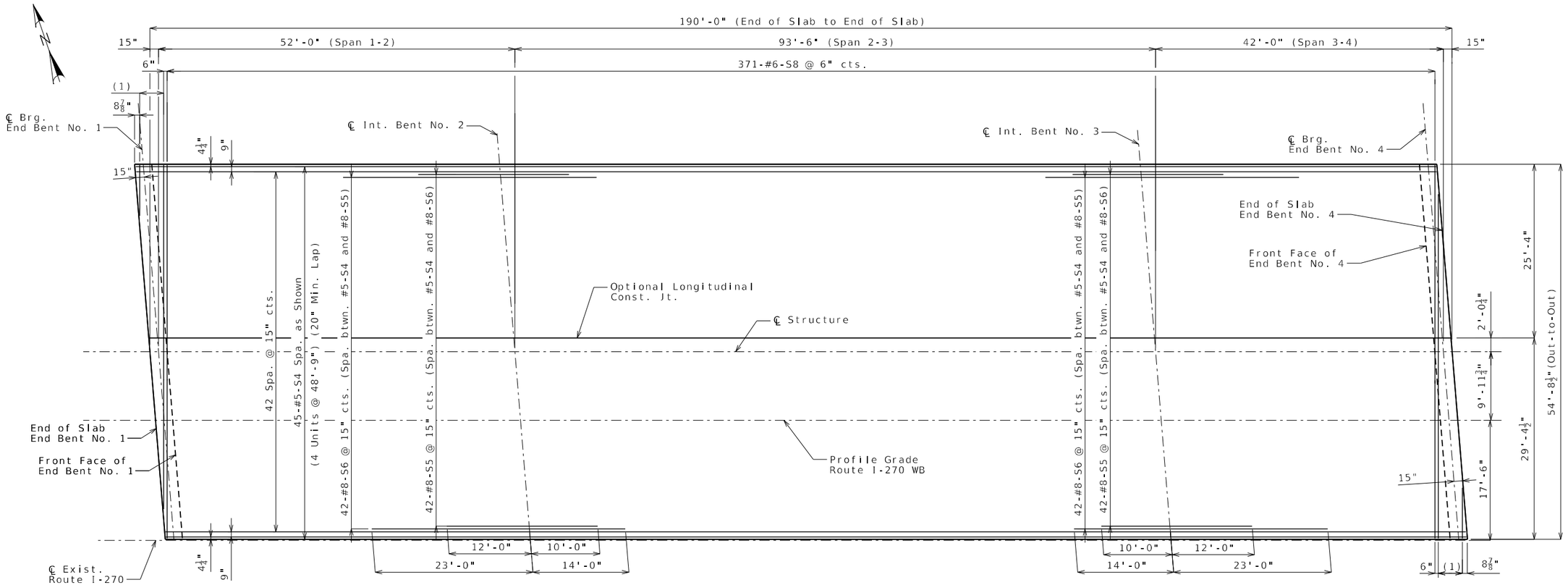

(1) 8-#6-S7 @ 6" cts.

Notes:

Longitudinal slab dimensions are measured horizontally.

For Typical Slab Section and Slab Pouring Sequence, see Sheet No. 32.

For details and reinforcement of Type D Barrier not shown, see Sheets No. 33 & 34.

For Theoretical Slab Haunching Diagram and Theoretical Bottom of Slab Elevations, see Sheet No. 29.

For Staging Plans, see Sheets No. 4 thru 6.

For location of coil inserts for pipe hangers, see Sheet No. 28.

PLAN OF SLAB REINFORCEMENT - TOP

Detailed September 2025
Checked September 2025

Note: This drawing is not to scale. Follow dimensions.

STATE OF MISSOURI
RYAN DAVID SHAW
NUMBER PE-2011000369
PROFESSIONAL ENGINEER
THIS SHEET HAS BEEN SIGNED, SEALED AND DATED ELECTRONICALLY

DATE PREPARED
4/2/2026

ROUTE	STATE
I-270	MO
DISTRICT	SHEET NO.
BR	31

COUNTY
ST. LOUIS

JOB NO.
JSL0021

CONTRACT ID.

PROJECT NO.

BRIDGE NO.
A9494

DATE	DESCRIPTION

MISSOURI HIGHWAYS AND TRANSPORTATION COMMISSION
105 WEST CAPITOL
JEFFERSON CITY, MO 65102
1-888-ASK-MODOT (1-888-275-6636)

HDR Engineering, Inc.
1001 Highlands Plaza Drive
Suite 200
St. Louis, MO 63110
314-425-8300
Certificate of Authority: 000856

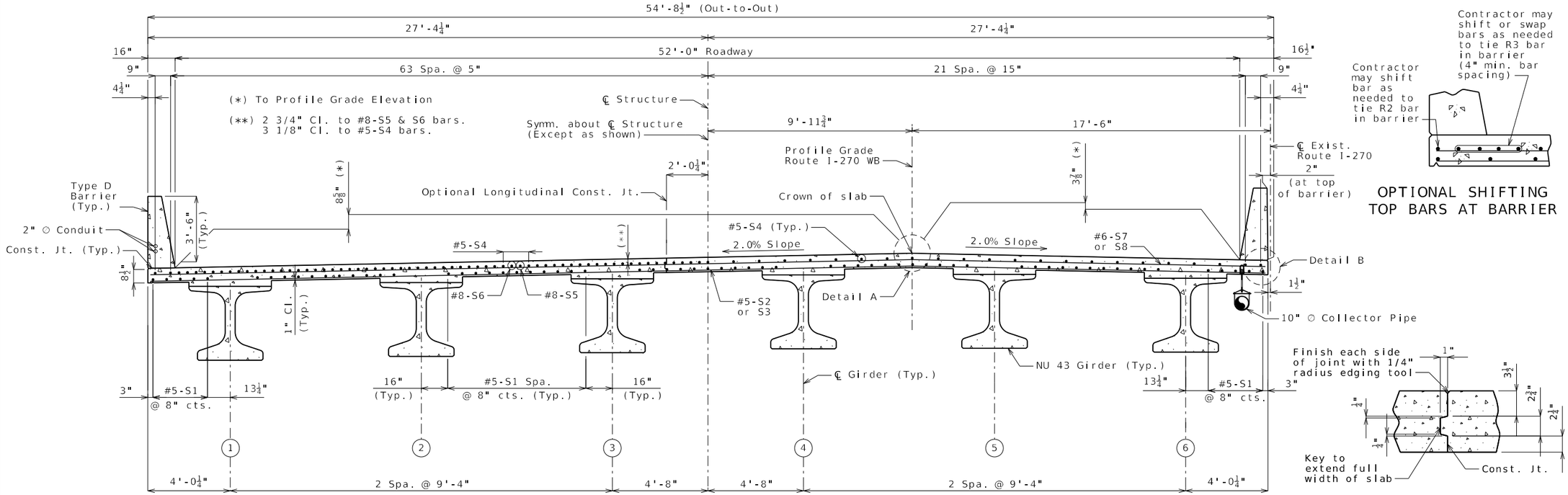

SECTION THRU SLAB

DETAIL A

DETAIL B

OPTIONAL SHIFTING TOP BARS AT BARRIER

SLAB CONSTRUCTION JOINT

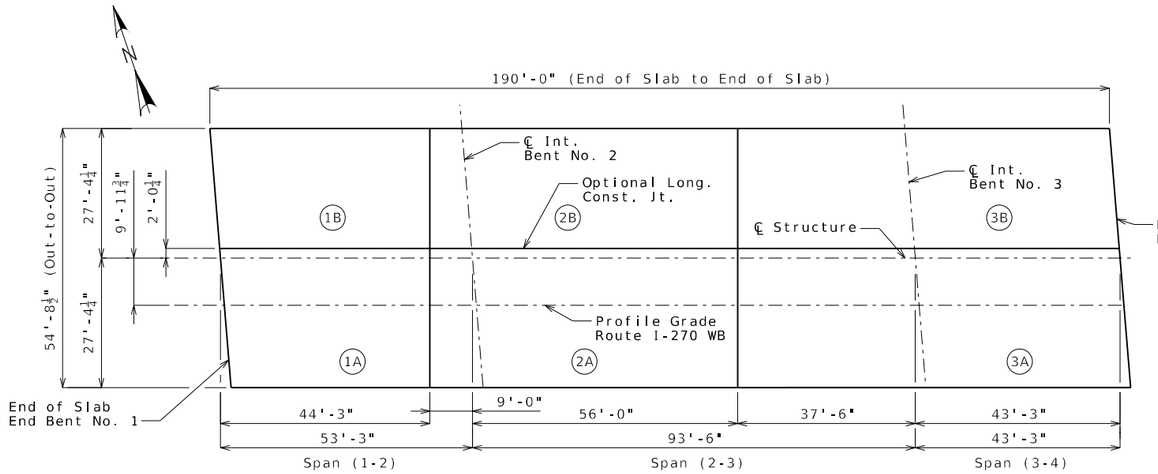

SLAB POURING SEQUENCE

	Sequence of Pours			Min. Rate of Pour Cu. Yds./Hr.
	Direction			With Retarder
Basic Sequence	1	2	3	25
	End to 2	1 to 3	2 to End	
Alternate pours to the basic skip sequence are subject to the approval of the engineer in accordance with Sec 703.				
Alternate A Pours	1 + 2		3	26
	End to 3		2 to End	
Alternate B Pours	1 + 2 + 3			44
	End to End			

If the optional longitudinal construction joint is omitted, the contractor shall submit a slab pour sequence for approval by the engineer.

The contractor shall furnish an approved retarder to retard the set of the concrete to 2.5 hours and shall pour and satisfactorily finish the slab pours at the given rate.

The concrete diaphragm at the intermediate bents and integral end bents shall be poured a minimum of 30 minutes and a maximum of 2 hours before the slab is poured.

The longitudinal construction joint may be omitted with the approval of the engineer. When the longitudinal construction joint is omitted, the minimum rate of pour for alternate pouring sequence shall be increased by a factor of 1.86.

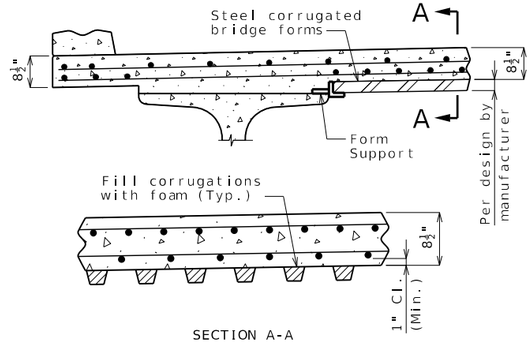

SECTION A-A

OPTIONAL STAY-IN-PLACE FORM DETAILS

Notes:

For Plan of Slab Showing Reinforcement, see Sheets No. 30 & 31.

For details and reinforcement of Type D Barrier, see Sheets No. 33 & 34.

For Theoretical Slab Haunching Diagram, Girder Camber Diagram and Theoretical Bottom of Slab Elevations, see Sheet No. 29.

For details and location of slab drains, see Sheet No. 27.

For conduit and junction box details, see Sheet No. 37.

For Staging Plans, see Sheets No. 4 thru 6.

For location of coil inserts for pipe hangers, see Sheet No. 28.

TYPICAL SLAB SECTION AND DETAILS

Detailed September 2025
Checked September 2025

Note: This drawing is not to scale. Follow dimensions.

STATE OF MISSOURI
RYAN DAVID SHAW
NUMBER PE-2011030369
PROFESSIONAL ENGINEER
THIS SHEET HAS BEEN SIGNED, SEALED AND DATED ELECTRONICALLY

DATE PREPARED 4/6/2026

ROUTE	STATE
I-270	MO
DISTRICT	SHEET NO.
BR	32

COUNTY: ST. LOUIS
JOB NO.: JSL0021
CONTRACT ID.:
PROJECT NO.:
BRIDGE NO.: A9494

DESCRIPTION | DATE

MISSOURI HIGHWAYS AND TRANSPORTATION COMMISSION
105 WEST CAPITOL
JEFFERSON CITY, MO 65102
1-888-ASK-MODOT (1-888-275-6636)

HDR Engineering, Inc.
1001 Highlands Plaza Drive
Suite 200
St. Louis, MO 63110
314-425-8300
Certificate of Authority: 000856

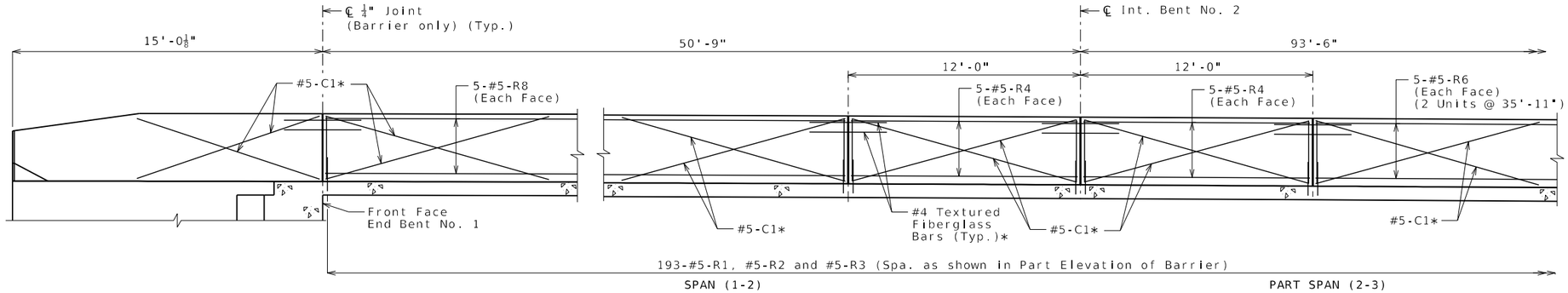

ELEVATION OF LEFT BARRIER

Longitudinal dimensions are horizontal.

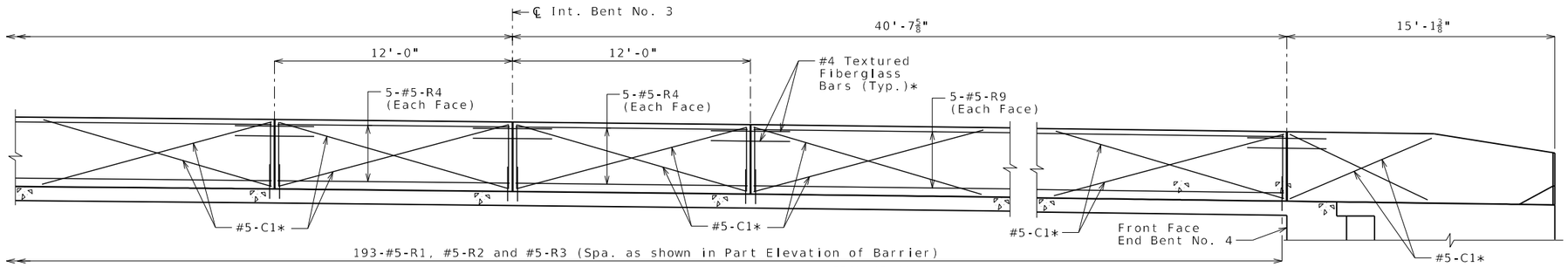

ELEVATION OF LEFT BARRIER

Longitudinal dimensions are horizontal.

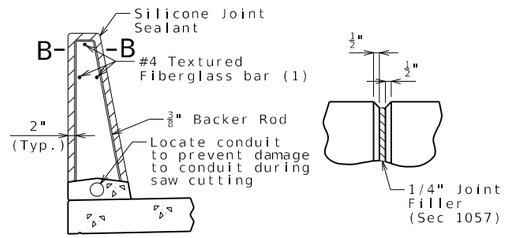

SECTION THRU SAW CUT JOINT

PART ELEVATION AT FORMED JOINT

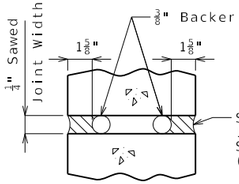

SECTION B-B

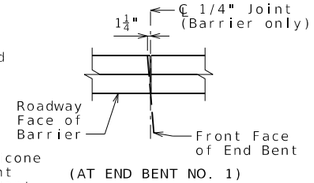

(AT END BENT NO. 1)

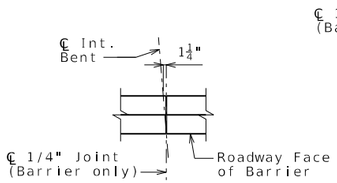

(AT INTERMEDIATE BENT)

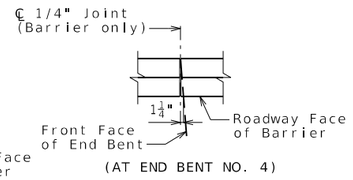

(AT END BENT NO. 4)

PART PLAN SHOWING JOINT LOCATION

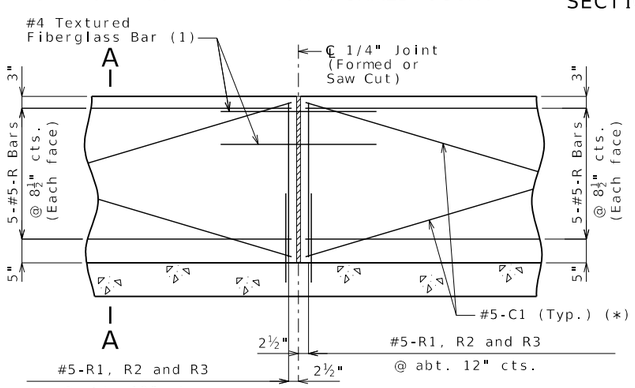

PART ELEVATION OF BARRIER

(1) Four feet long, centered on joint, slip-formed option only

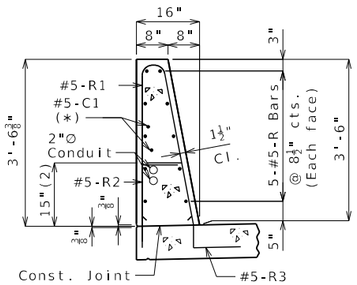

SECTION A-A

Use a minimum lap of 2'-6" for #5 horizontal barrier bars.

The cross-sectional area above the slab is 3.52 square feet.

(2) To top of bar

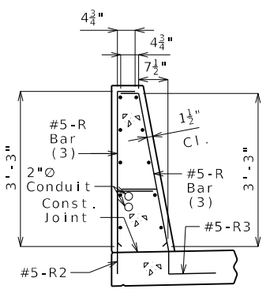

R-BAR PERMISSIBLE ALTERNATE SHAPE

(3) The R1 bar may be separated into two bars as shown, at the contractor's option, only when slip forming is not used. (All dimensions are out to out.)

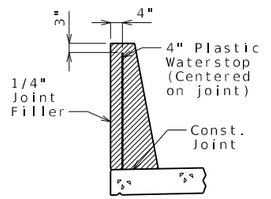

WATERSTOP DETAIL

Plastic waterstop shall be placed in all formed joints, except structures with superelevation, use on lower joints only.

Cost of plastic waterstop, complete in place, will be considered completely covered by the contract unit price for Type D Barrier.

General Notes:

(*) Slip-formed option only.

Conventional forming or slip forming may be used. Saw cut joints may be used with conventional forming.

Top of barrier shall be built parallel to grade and barrier joints (except at end bents) normal to grade.

All exposed edges of barrier shall have either a 1/2-inch radius or a 3/8-inch bevel, unless otherwise noted.

Payment for all concrete and reinforcement, complete in place, will be considered completely covered by the contract unit price for Type D Barrier per linear foot.

Concrete in barrier shall be Class B-1.

Measurement of barrier is to the nearest linear foot for each structure, measured along the outside top of slab from end of wing to end of wing.

Concrete traffic barrier delineators shall be placed on top of the barrier as shown on Missouri Standard Plan 617.10 and in accordance with Sec 617. Delineators on bridges with two-lane, two-way traffic shall have retroreflective sheeting on both sides. Concrete traffic barrier delineators will be considered completely covered by the contract unit price for Type D Barrier.

Joint sealant and backer rods shall be in accordance with Sec 717 for silicone joint sealant for saw cut and formed joints.

For slip-formed option, both sides of barrier shall have a vertically broomed finish and the top shall have a transversely broomed finish.

Plastic waterstop shall not be used with saw cut joints.

Reinforcing steel shall be shifted in the field to clear resin anchors for sign support brackets.

For conduit details, see Sheet No. 37.

For sign support details, see Sheet No. 39.

TYPE D BARRIER (LEFT)

Detailed September 2025
Checked September 2025

Note: This drawing is not to scale. Follow dimensions.

STATE OF MISSOURI
RYAN DAVID SHAW
NUMBER PE-2011000269
PROFESSIONAL ENGINEER
THIS SHEET HAS BEEN SIGNED, SEALED AND DATED ELECTRONICALLY

DATE PREPARED 4/2/2026

ROUTE	STATE
I-270	MO
DISTRICT	SHEET NO.
BR	33

COUNTY: ST. LOUIS
JOB NO.: JSL0021
CONTRACT ID.:
PROJECT NO.:
BRIDGE NO.: A9494

DATE	DESCRIPTION

MISSOURI HIGHWAYS AND TRANSPORTATION COMMISSION
105 WEST CAPITOL
JEFFERSON CITY, MO 65102
1-888-ASK-MODOT (1-888-275-6636)
HDR Engineering, Inc.
1001 Highlands Plaza Drive
Suite 200
St. Louis, MO 63110
314-425-8300
Certificate of Authority: 000856

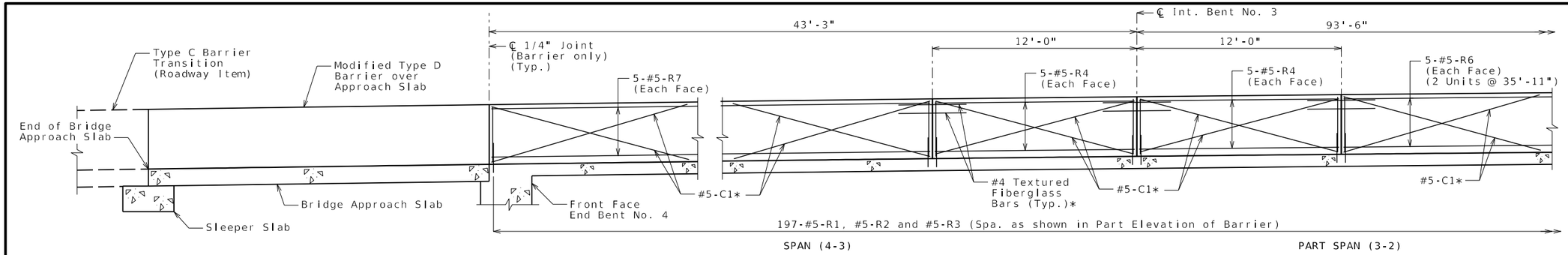

ELEVATION OF RIGHT BARRIER

Longitudinal dimensions are horizontal.

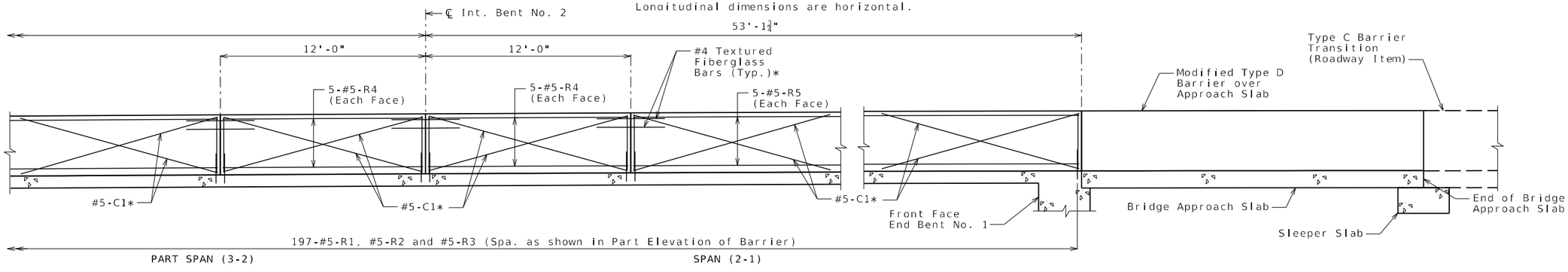

ELEVATION OF RIGHT BARRIER

Longitudinal dimensions are horizontal.

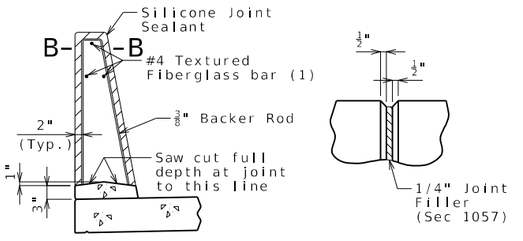

SECTION THRU SAW CUT JOINT

PART ELEVATION AT FORMED JOINT

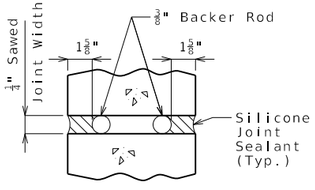

SECTION B-B

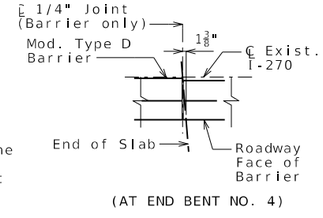

(AT END BENT NO. 4)

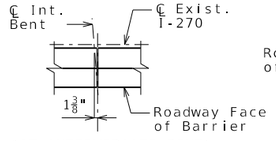

(AT INTERMEDIATE BENT)

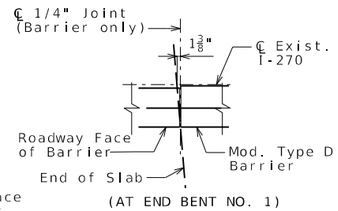

(AT END BENT NO. 1)

PART PLAN SHOWING JOINT LOCATION

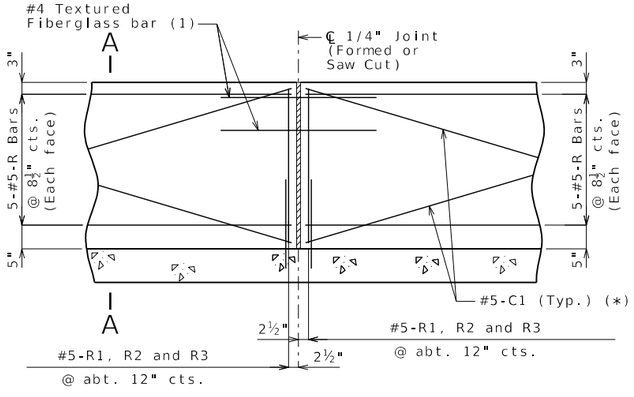

PART ELEVATION OF BARRIER

(1) Four feet long, centered on joint, slip-formed option only.

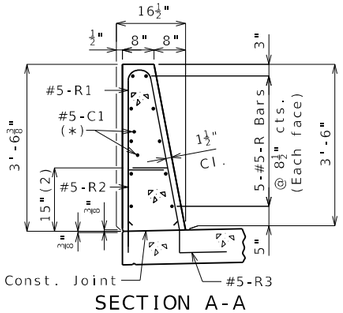

SECTION A-A

Use a minimum lap of 2'-6" for #5 horizontal barrier bars.

The cross-sectional area above the slab is 3.60 square feet.

(2) To top of bar

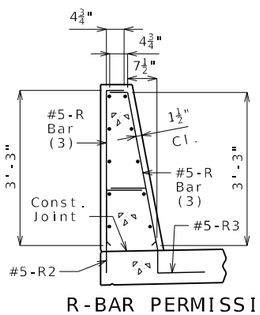

R-BAR PERMISSIBLE ALTERNATE SHAPE

(3) The R1 bar may be separated into two bars as shown, at the contractor's option, only when slip forming is not used. (All dimensions are out to out.)

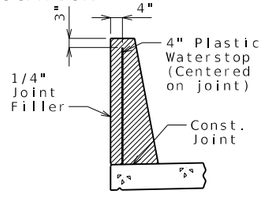

WATERSTOP DETAIL

Plastic waterstop shall be placed in all formed joints, except structures with superelevation, use on lower joints only.

Cost of plastic waterstop, complete in place, will be considered completely covered by the contract unit price for Type D Barrier.

General Notes:

(∗) Slip-formed option only.

Conventional forming or slip forming may be used. Saw cut joints may be used with conventional forming.

Top of barrier shall be built parallel to grade and barrier joints normal to grade.

All exposed edges of barrier shall have either a 1/2-inch radius or a 3/8-inch bevel, unless otherwise noted.

Payment for all concrete and reinforcement, complete in place, will be considered completely covered by the contract unit price for Type D Barrier per linear foot.

Concrete in barrier shall be Class B-1.

Measurement of barrier is to the nearest linear foot for each structure, measured along the outside top of slab from end of slab to end of slab.

Concrete traffic barrier delineators shall be placed on top of the barrier as shown on Missouri Standard Plan 617.10 and in accordance with Sec 617. Delineators on bridges with two-lane, two-way traffic shall have retroreflective sheeting on both sides. Concrete traffic barrier delineators will be considered completely covered by the contract unit price for Type D Barrier.

Joint sealant and backer rods shall be in accordance with Sec 717 for silicone joint sealant for saw cut and formed joints.

For slip-formed option, both sides of barrier shall have a vertically broomed finish and the top shall have a transversely broomed finish.

Plastic waterstop shall not be used with saw cut joints.

For Modified Type D Barrier details, see Sheet No. 36.

TYPE D BARRIER (RIGHT)

Detailed September 2025
Checked September 2025

Note: This drawing is not to scale. Follow dimensions.

RYAN DAVID SHAW
NUMBER PE-2011000369
PROFESSIONAL ENGINEER
STATE OF MISSOURI
THIS SHEET HAS BEEN SIGNED, SEALED AND DATED ELECTRONICALLY

DATE PREPARED 4/2/2026

ROUTE	STATE
I-270	MO
DISTRICT	SHEET NO.
BR	34

COUNTY: ST. LOUIS
JOB NO.: JSL0021
CONTRACT ID.:
PROJECT NO.:
BRIDGE NO.: A9494

DESCRIPTION	DATE

MISSOURI HIGHWAYS AND TRANSPORTATION COMMISSION
105 WEST CAPITOL
JEFFERSON CITY, MO 65102
1-888-ASK-MODOT (1-888-275-6636)
HDR Engineering, Inc.
1001 Highlands Plaza Drive
Suite 200
St. Louis, MO 63110
314-425-8300
Certificate of Authority: 000856

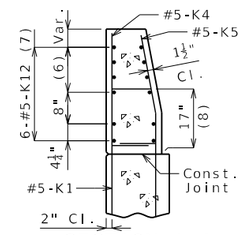

SECTION A-A

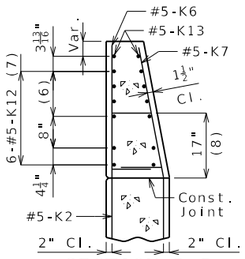

SECTION B-B

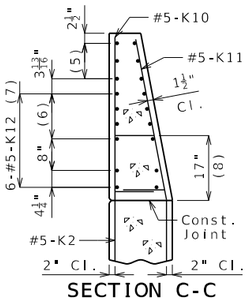

SECTION C-C

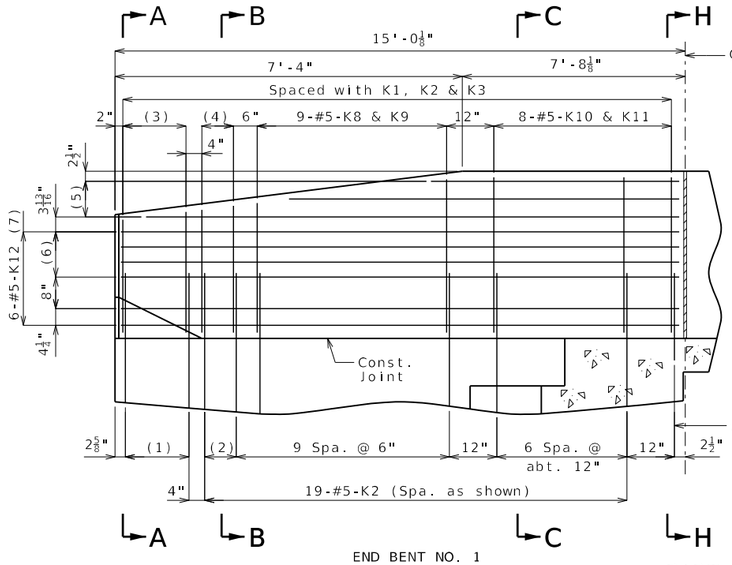

PART ELEVATION

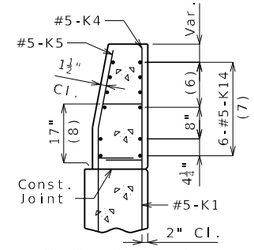

SECTION D-D

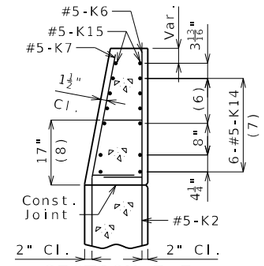

SECTION E-E

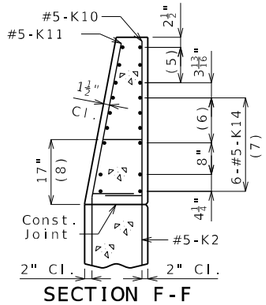

SECTION F-F

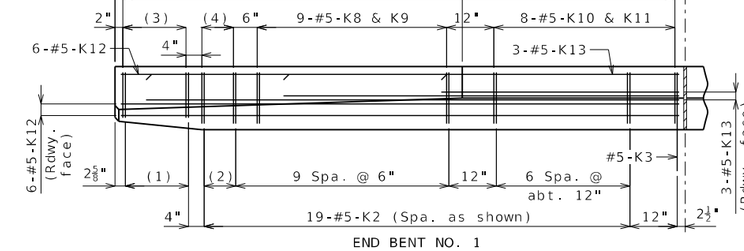

PART PLAN

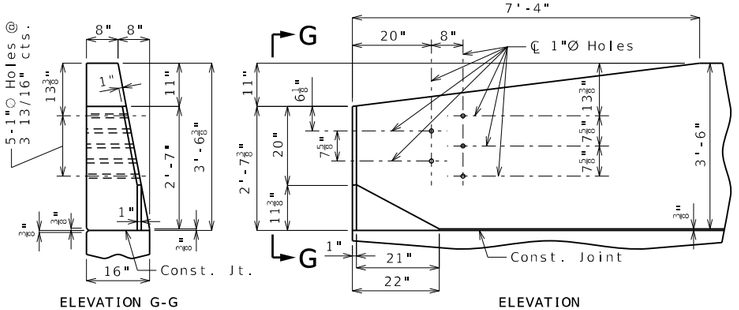

ELEVATION G-G ELEVATION

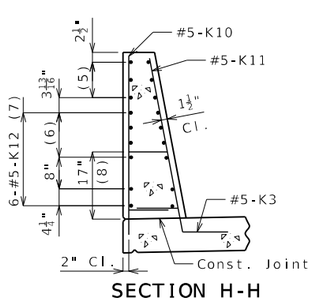

SECTION H-H

(1) 5-#5-K1 @ 4" cts.

(2) 2 spaces @ 4"

(3) 5-#5-K4 & K5

(4) 3-#5-K6 & K7

(5) 3-#5-K13 or K15 @ 4½" cts., each face

(6) 3 spaces @ 3 13/16"

(7) Spaced as shown, each face

(8) To top of bar

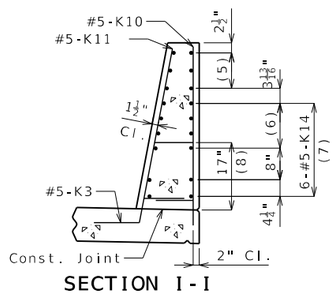

SECTION I-I

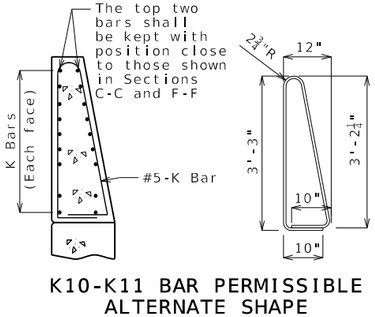

K10-K11 BAR PERMISSIBLE ALTERNATE SHAPE

(Other K bars not shown for clarity)

The K10-K11 bar combination may be furnished as one bar as shown, at the contractor's option.

Notes:

All dimensions are out to out.

For conduit and junction box details, see Sheet No. 37.

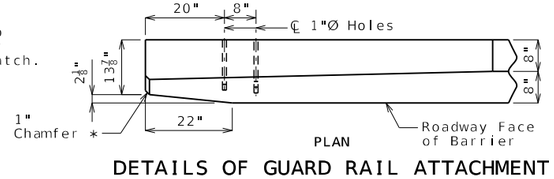

PLAN

* Transition to zero at Type A curb for gutter lines to match.

DETAILS OF GUARD RAIL ATTACHMENT

General Notes:

Concrete traffic barrier delineators shall be placed on top of the barrier as shown on Missouri Standard Plan 617.10 and in accordance with Sec 617. Delineators on bridges with two-lane, two-way traffic shall have retroreflective sheeting on both sides. Concrete traffic barrier delineators will be considered completely covered by the contract unit price for Type D Barrier.

Reinforcing Steel:
Minimum clearance to reinforcing steel shall be 1 1/2" except as shown for bars embedded into end bent.

TYPE D BARRIER AT END BENTS (LEFT)

(Left Barrier Only)

Detailed September 2025
Checked September 2025

Note: This drawing is not to scale. Follow dimensions.

RYAN DAVID SHAW
NUMBER PE-2011020369
PROFESSIONAL ENGINEER
STATE OF MISSOURI
THIS SHEET HAS BEEN SIGNED, SEALED AND DATED ELECTRONICALLY

DATE PREPARED 4/2/2026

ROUTE	STATE
I-270	MO
DISTRICT	SHEET NO.
BR	35

COUNTY: ST. LOUIS
JOB NO.: JSL0021
CONTRACT ID.:
PROJECT NO.:
BRIDGE NO.: A9494

DESCRIPTION | DATE

MISSOURI HIGHWAYS AND TRANSPORTATION COMMISSION
105 WEST CAPITOL
JEFFERSON CITY, MO 65102
1-888-ASK-MODOT (1-888-275-6636)

HDR Engineering, Inc.
1001 Highlands Plaza Drive
Suite 200
St. Louis, MO 63110
314-425-8300
Certificate of Authority: 000856

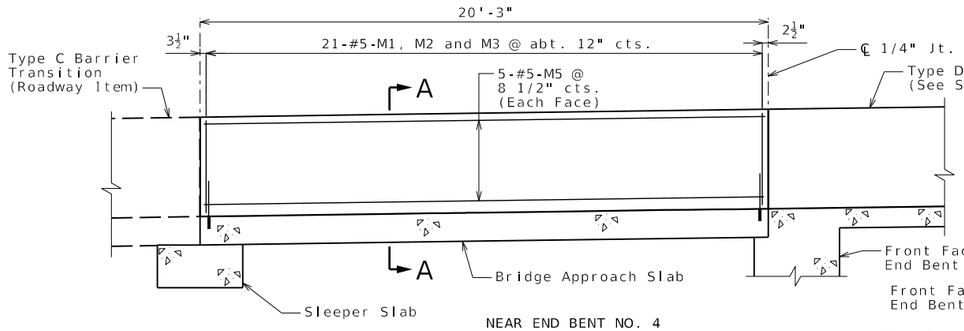

NEAR END BENT NO. 4

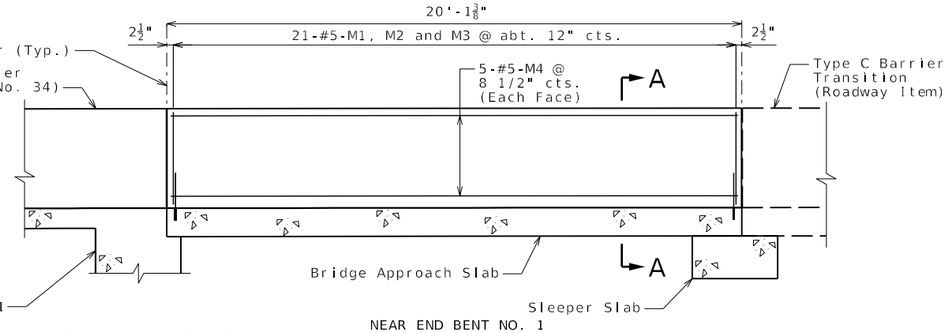

NEAR END BENT NO. 1

PART ELEVATION OF BARRIER ON APPROACH SLABS

Longitudinal dimensions are horizontal.

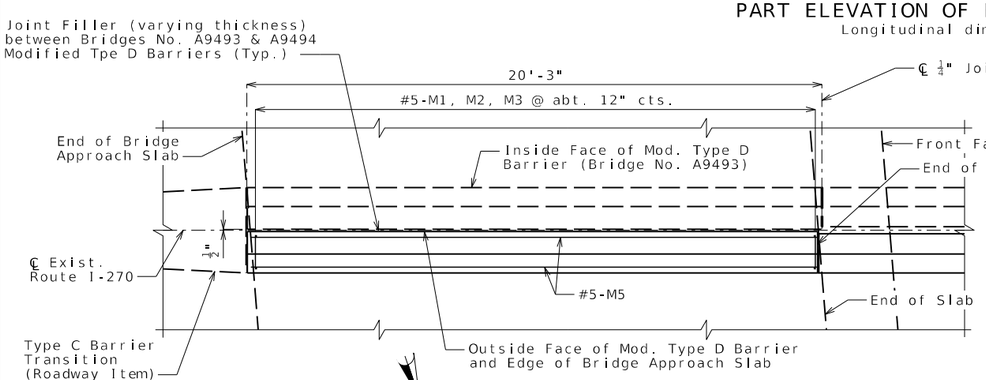

NEAR END BENT NO. 4

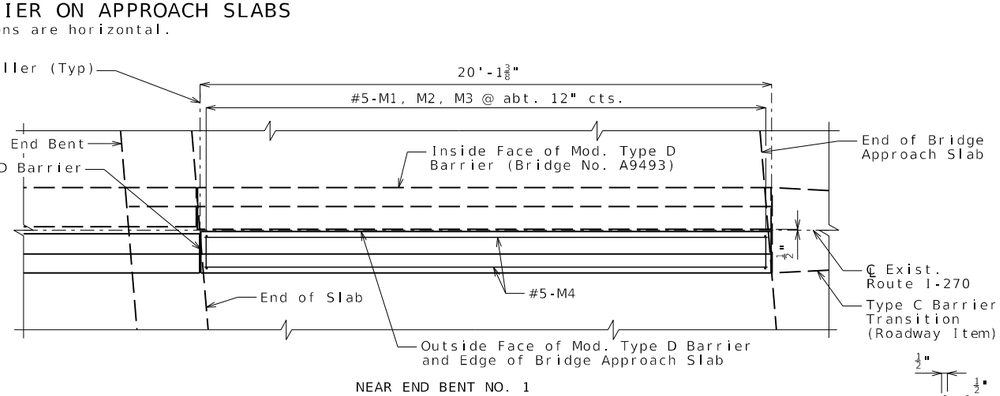

NEAR END BENT NO. 1

PART PLAN OF BARRIER ON APPROACH SLABS

Longitudinal dimensions are horizontal.

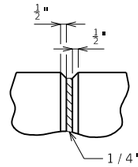

PART ELEVATION AT FORMED JOINT

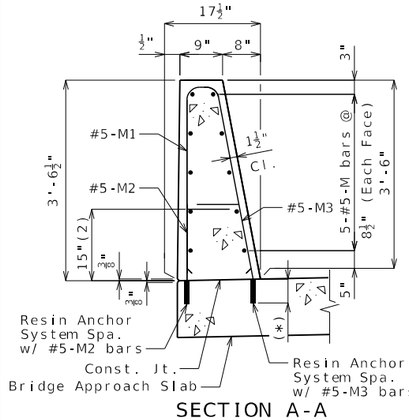

SECTION A-A

The cross-sectional area above the approach slab is 3.89 square feet.

(2) To top bar.

(*) Manufacturer's embedment length (5" minimum).

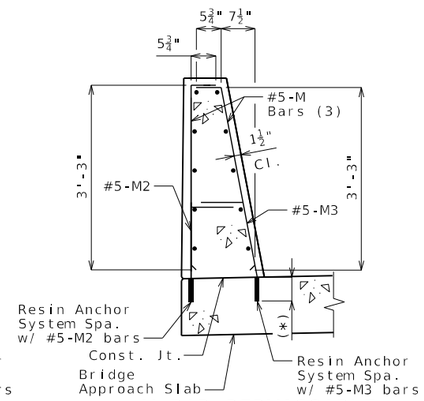

M-BAR PERMISSIBLE ALTERNATE SHAPE

(3) The M1 bar may be separated into two bars as shown, at the contractor's option. (All dimensions are out to out.)

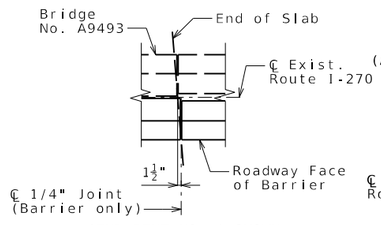

(END BENT NO. 1 SHOWN, END BENT NO, 4 SIMILAR)

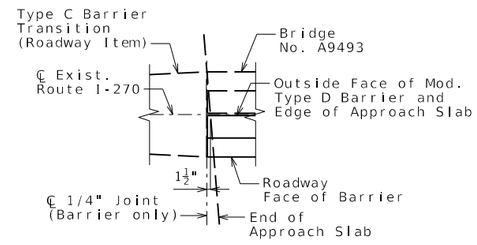

(AT END OF APPROACH SLAB END BENT NO. 4)

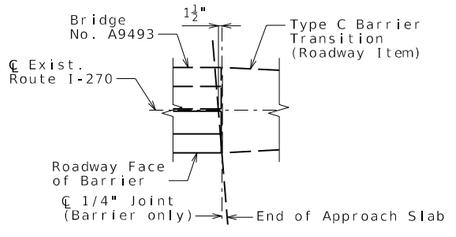

(AT END OF APPROACH SLAB END BENT NO. 1)

PART PLAN SHOWING JOINT LOCATIONS

Notes:

Conventional forming shall be used.

Top of Modified Type D Barrier shall be built parallel to grade with barrier curb joints.

All exposed edges of barrier shall have either a 1/2-inch radius or a 3/8-inch bevel, unless otherwise noted.

Payment for all concrete and reinforcement, complete in place, will be considered completely covered by the contract unit price for Modified Type D Barrier per linear foot.

Concrete in the barrier shall be Class B-1.

Measurement of barrier is to the nearest linear foot for each structure, measured along the top of approach slab at roadway face of barrier as detailed.

Concrete traffic barrier delineators shall be placed on top of the barrier as shown on Missouri Standard Plan 617.10 and in accordance with Sec 617. Delineators on bridges with two-lane, two-way traffic shall have retroreflective sheeting on both sides. Concrete traffic barrier delineators will be considered completely covered by the contract unit price for Modified Type D Barrier.

The contractor shall use one of the qualified resin anchor systems in accordance with Sec 1039.

Cost of furnishing and installing resin anchor systems, complete in place, will be considered completely covered by the contract unit price for Modified Type D Barrier.

The minimum embedment depth in concrete with f'c = 4000 psi for the resin anchor system shall be that required to meet the minimum ultimate pullout strength in accordance with Sec 1039 but shall not be less than 5".

A galvanized #5 Grade 60 reinforcing bar shall be substituted for the 5/8"Ø threaded rod.

MODIFIED TYPE D BARRIER (RIGHT) AT APPROACH SLABS

STATE OF MISSOURI
RYAN DAVID SHAW
NUMBER PE-2011020269
PROFESSIONAL ENGINEER
THIS SHEET HAS BEEN SIGNED, SEALED AND DATED ELECTRONICALLY

DATE PREPARED 4/2/2026

ROUTE	STATE
I-270	MO
DISTRICT	SHEET NO.
BR	36

COUNTY: ST. LOUIS

JOB NO.: JSL0021

CONTRACT ID.:

PROJECT NO.:

BRIDGE NO.: A9494

DESCRIPTION | DATE

MISSOURI HIGHWAYS AND TRANSPORTATION COMMISSION
105 WEST CAPITOL
JEFFERSON CITY, MO 65102
1-888-ASK-MODOT (1-888-275-6636)
HDR Engineering, Inc.
1001 Highlands Plaza Drive
Suite 200
St. Louis, MO 63110
314-425-6300
Certificate of Authority: 000856

Detailed September 2025
Checked September 2025

Note: This drawing is not to scale. Follow dimensions.

c:\pwworking\central01\d4975500\B_A9494_036_SL0021.dgn 12:35:24 PM 4/2/2026

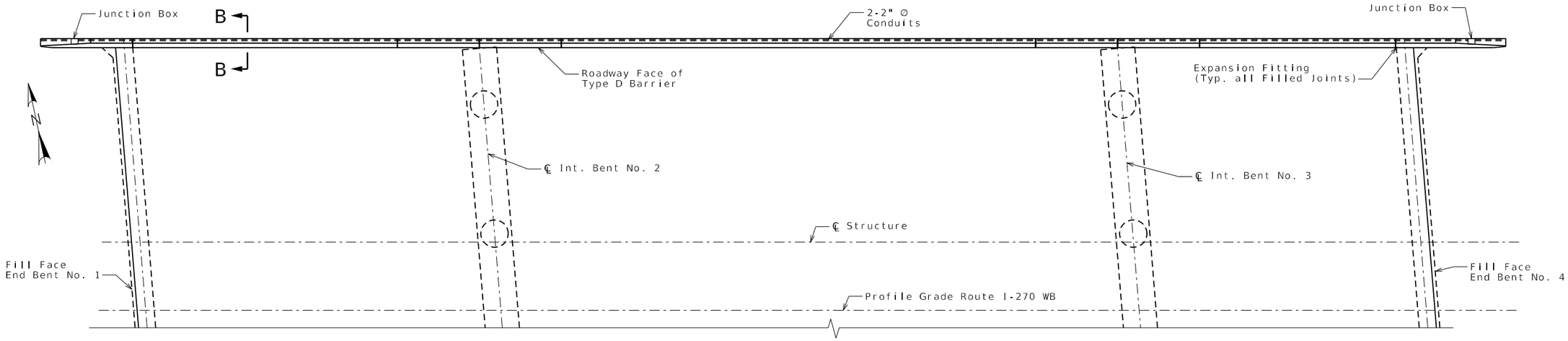

PLAN OF CONDUIT SYSTEM

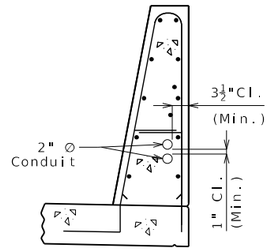

SECTION B-B
(Left barrier)

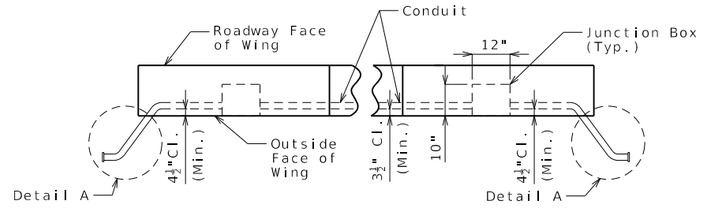

PART PLAN OF BARRIER SHOWING
DELINEATED CONDUIT SYSTEM PLACEMENT

(Single conduit shown, multiple conduits similar.)
(Expansion fitting and deflection coupling not shown for clarity.)

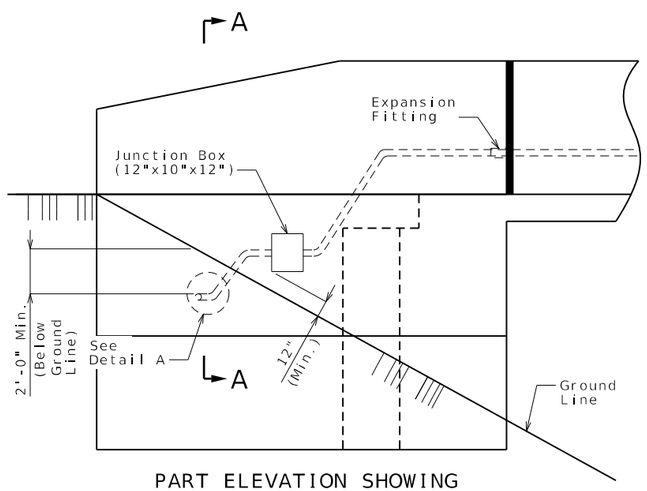

PART ELEVATION SHOWING
JUNCTION BOX IN WING

(Single conduit shown, multiple conduits similar.)

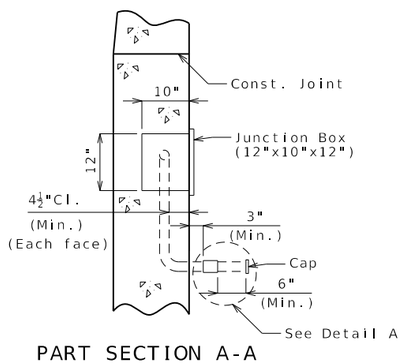

PART SECTION A-A

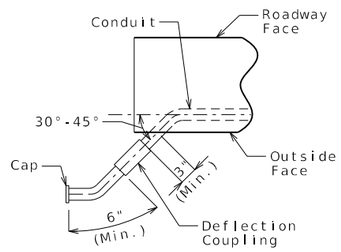

DETAIL A

Notes:

All conduits shall be rigid, nonmetallic, Schedule 40, heavy wall polyvinyl chloride (PVC) with 3 1/2" minimum cover in barrier and 4 1/2" minimum cover in abutment wing. Each section of conduit shall bear the Underwriters Laboratories (UL) label.

Shift reinforcing steel in field where necessary to clear conduit and junction boxes.

Expansion fittings shall be placed as shown and set in accordance with the manufacturer's requirements and based on the air temperature at the time of setting given an estimated total expansion movement of 1 1/2 inch at closed joints using a maximum temperature range of 120°F and a maximum temperature of 110°F.

Minimum clearance between conduits placed in barrier shall be 1".

All junction boxes shall be PVC molded in accordance with Sec 1062 and designed for flush mounting. The conduit terminations shall be permanent or separable. The terminations and covers shall be of watertight construction and shall meet requirements for NEMA 4 or NEMA 4X enclosures.

Drainage shall be provided at low points or other critical locations of all conduits and all junction boxes in accordance with Sec 707. All conduits shall be sloped to drain where possible.

Junction box size shown on plan may require special order. Smaller junction box may be substituted if junction box meets conduit installation, clearance and project requirements.

MoDOT Construction Personnel: Indicate in field and on bridge plans for future work the exact location of buried conduit at ends of bridge that are capped and not immediately used.

Payment for furnishing and installing Conduit System, complete in place, will be considered completely covered by the contract lump sum price for Conduit System on Structure.

CONDUIT SYSTEM DETAILS

Detailed September 2025
Checked September 2025

Note: This drawing is not to scale. Follow dimensions.

STATE OF MISSOURI
RYAN DAVID SHAW
NUMBER PE-2011000369
PROFESSIONAL ENGINEER
THIS SHEET HAS BEEN SIGNED, SEALED AND DATED ELECTRONICALLY

DATE PREPARED 4/2/2026
ROUTE I-270 | STATE MO
DISTRICT BR | SHEET NO. 37
COUNTY ST. LOUIS
JOB NO. JSL0021
CONTRACT ID.
PROJECT NO.
BRIDGE NO. A9494

DESCRIPTION | DATE

MISSOURI HIGHWAYS AND TRANSPORTATION COMMISSION
105 WEST CAPITOL
JEFFERSON CITY, MO 65102
1-888-ASK-MODOT (1-888-275-6636)

HDR Engineering, Inc.
1001 Highlands Plaza Drive
Suite 200
St. Louis, MO 63110
314-425-8300
Certificate of Authority: 000856

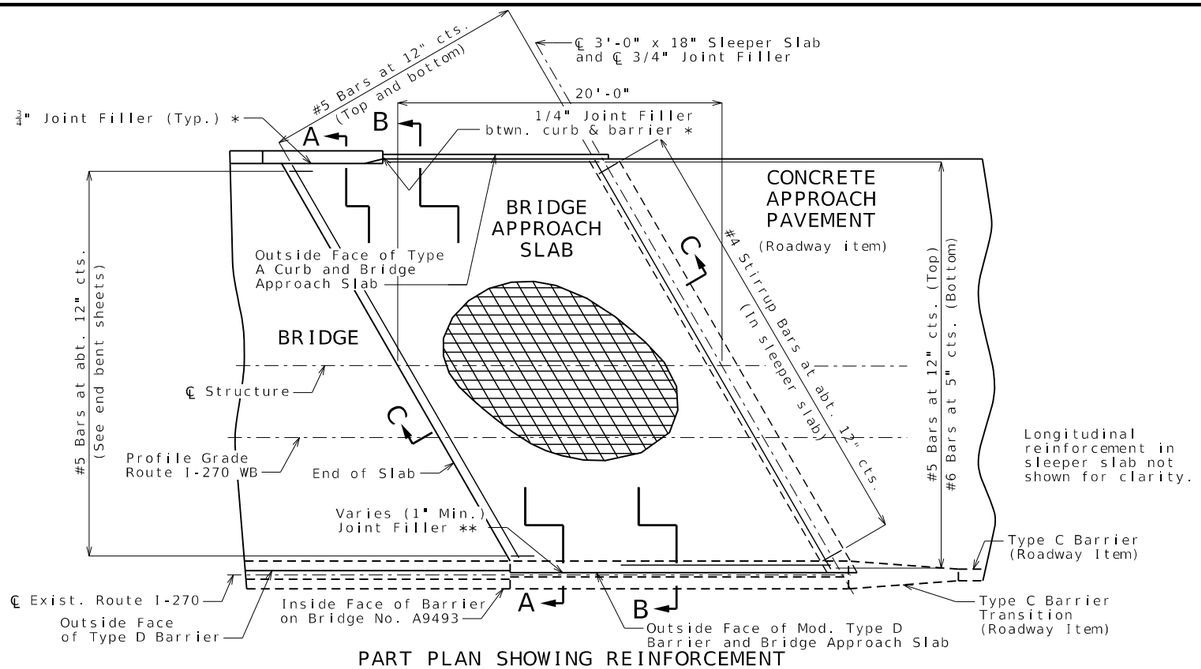

PART PLAN SHOWING REINFORCEMENT

(Approach Slab at End Bent No. 4 shown, Approach Slab at End Bent No. 1 similar)

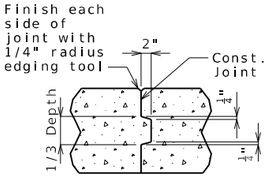

CONSTRUCTION JOINT DETAIL

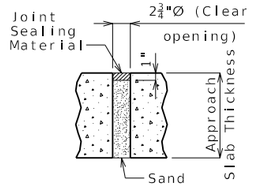

UNDERSEAL ACCESS HOLE DETAIL

(If required)

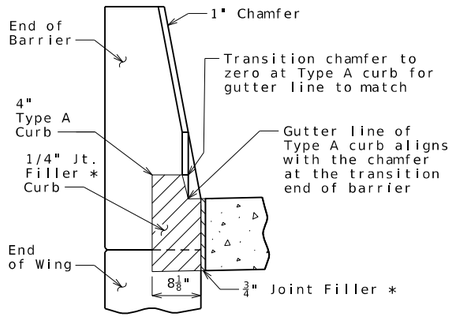

SECTION BETWEEN CURB AND BARRIER

General Notes:

All concrete for the bridge approach slab and sleeper slab shall be in accordance with Sec 503 (f'c = 4,000 psi).

The reinforcing steel in the bridge approach slab and the sleeper slab shall be galvanized Grade 60 with fy = 60,000 psi.

Drain pipe may be either 6" diameter corrugated metallic-coated pipe underdrain, 4" diameter corrugated polyvinyl chloride (PVC) drain pipe, or 4" diameter corrugated polyethylene (PE) drain pipe.

Minimum clearance to reinforcing steel shall be 1 1/2", unless otherwise shown.

The reinforcing steel in the bridge approach slab and the sleeper slab shall be continuous. The transverse reinforcing steel may be made continuous by providing a minimum lap splice of 24 inches for #5 bars and 40 inches for #6 bars, or by mechanical bar splice.

All joint filler shall be in accordance with Sec 1057 for preformed fiber expansion joint filler except as noted.

The contractor shall pour and satisfactorily finish the bridge slab before placing the bridge approach slab.

Longitudinal construction joints in approach slab and sleeper slab shall be aligned with longitudinal construction joints in bridge slab.

For concrete approach pavement details, see roadway plans.

See Missouri Standard Plan 609.00 for details of Type A curb.

Payment for furnishing all materials, labor and excavation necessary to construct the approach slab, including the timber header, sleeper slab, underdrain, Type 5 aggregate base, joint filler and all other appurtenances and incidental work as shown on this sheet, complete in place, will be considered completely covered by the contract unit price for Bridge Approach Slab (Major) per square yard.

* Seal joint between vertical face of approach slab and wing with sealant in accordance with Sec 717 for silicone joint sealant for saw cut and formed joints.

** Seal joint between vertical faces of Mod. Type D Barriers, approach slabs and wings of Bridge No. A9493 and Bridge No. A9494 with sealant in accordance with Sec 717 for silicone joint sealant for saw cut and formed joints.

*** 3" joint filler between top of right wing wall and bottom of approach slab.

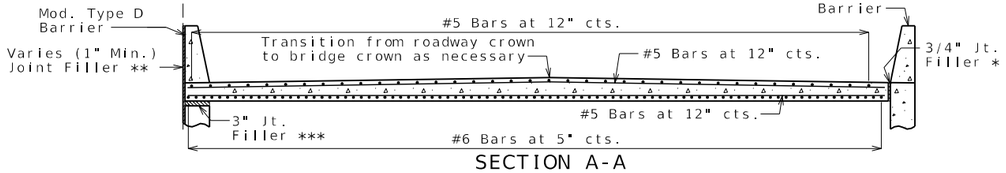

SECTION A-A

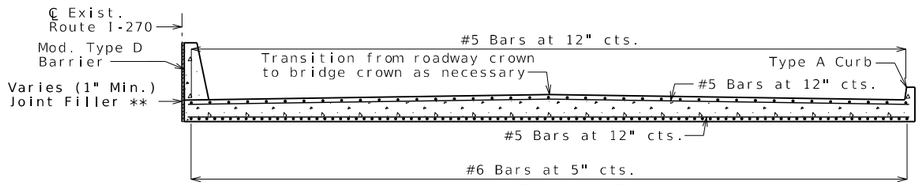

SECTION B-B

With the approval of the engineer, the contractor may crown the bottom of the approach slab to match the crown of the roadway surface.

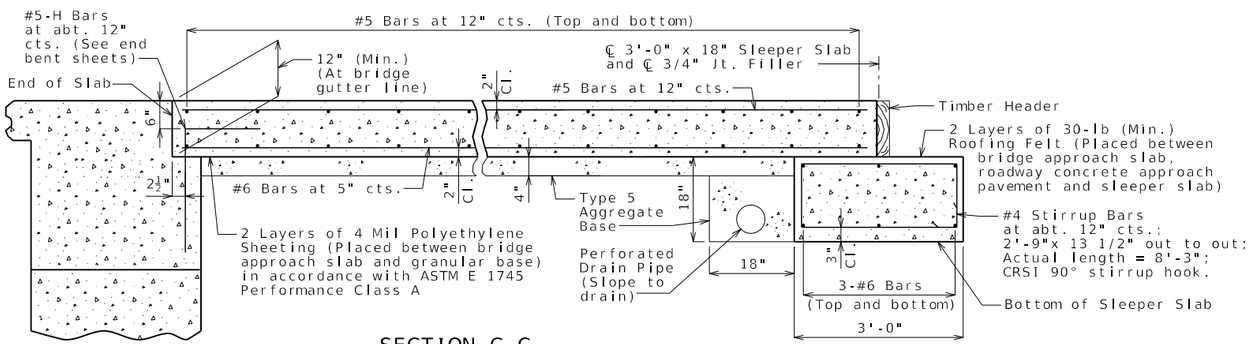

SECTION C-C

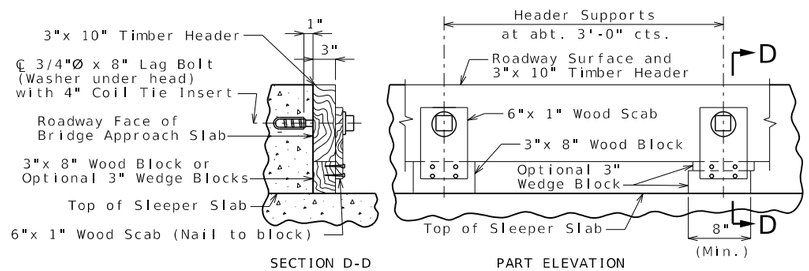

SECTION D-D PART ELEVATION

DETAILS OF TIMBER HEADER

Remove timber header when concrete pavement is placed.

BRIDGE APPROACH SLAB (MAJOR)

Detailed September 2025
Checked September 2025

Note: This drawing is not to scale. Follow dimensions.

STATE OF MISSOURI
RYAN DAVID SHAW
NUMBER PE-2011002089
PROFESSIONAL ENGINEER
THIS SHEET HAS BEEN SIGNED, SEALED AND DATED ELECTRONICALLY

DATE PREPARED 4/2/2026

ROUTE	STATE
I-270	MO
DISTRICT	SHEET NO.
BR	38

COUNTY: ST. LOUIS

JOB NO.: JSL0021

CONTRACT ID.:

PROJECT NO.:

BRIDGE NO.: A9494

DATE	DESCRIPTION

MISSOURI HIGHWAYS AND TRANSPORTATION COMMISSION
105 WEST CAPITOL
JEFFERSON CITY, MO 65102
1-888-ASK-MODOT (1-888-275-6636)

HDR Engineering, Inc.
1001 Highlands Plaza Drive
Suite 200
St. Louis, MO 63110
314-425-8300
Certificate of Authority: 000856

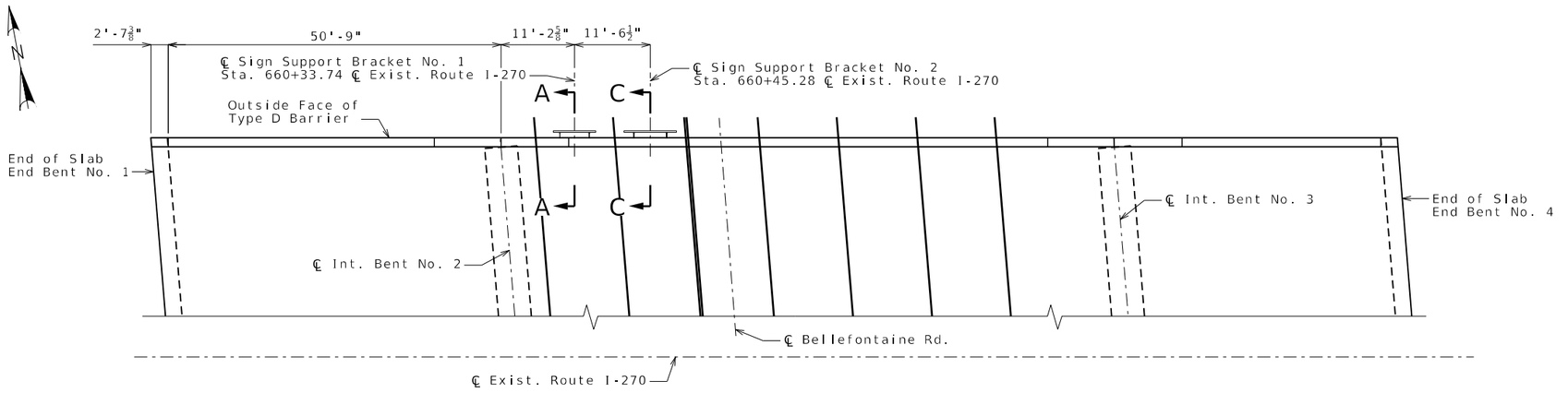

PLAN

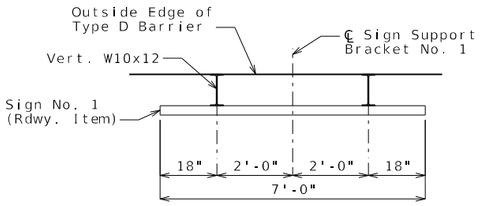

PART PLAN SHOWING SIGN NO. 1

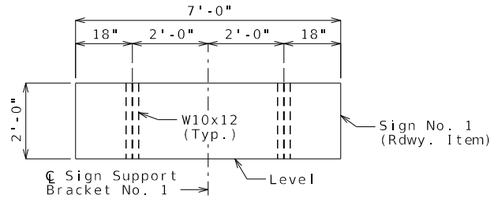

SIGN NO. 1 ELEVATION

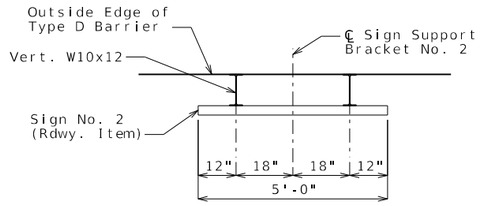

PART PLAN SHOWING SIGN NO. 2

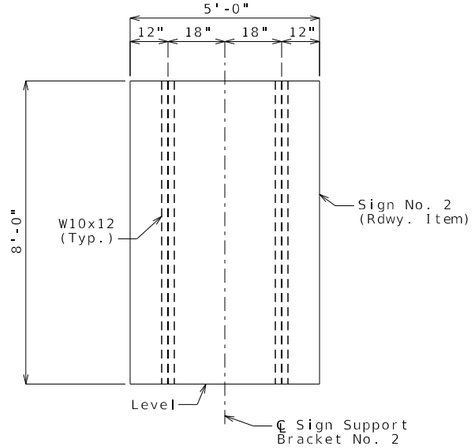

SIGN NO. 2 ELEVATION

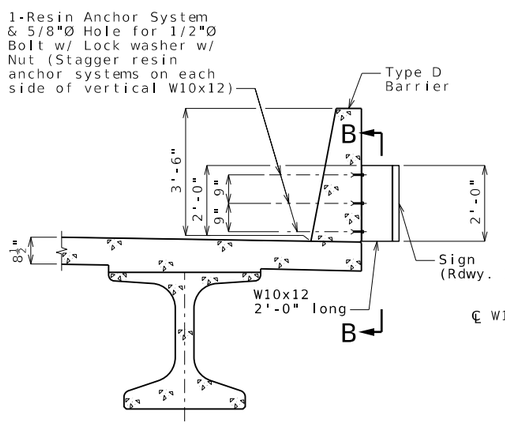

SECTION A-A

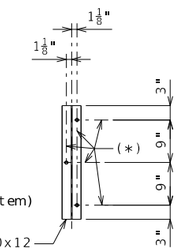

SECTION B-B

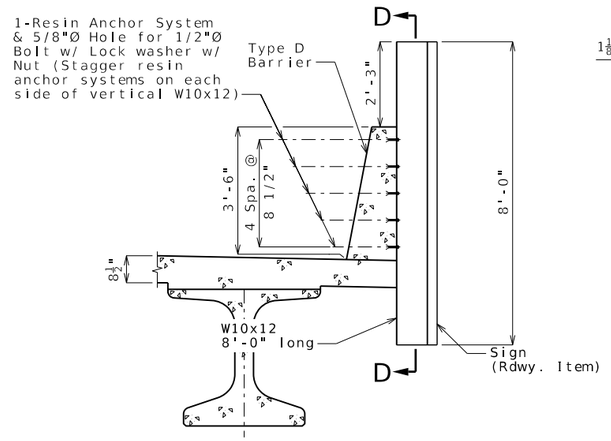

SECTION C-C

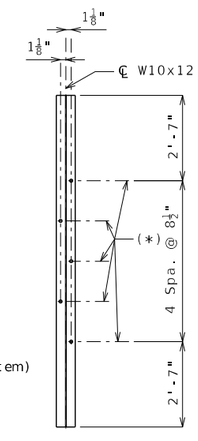

SECTION D-D

SIGN SUPPORT DETAILS

(*) 5/8"∅ Hole for 1/2"∅ Resin Anchor Bolt (Typ.)

Notes:

Minimum clearance on Sign No. 1 should read 15'-11".

Center and level sign on brackets.

All structural steel for sign support shall be ASTM A36 galvanized.

All bolts and washers shall be galvanized.

The cost of furnishing and erecting the sign support brackets, complete in place, shall be paid for by the lump sum price for Fabricated Sign Support Bracket.

Sign attachment to support brackets per sign manufacturer.

All sign dimensions shall be verified by sign manufacturer.

The contractor shall use one of the qualified resin anchor systems in accordance with Sec 1039.

The minimum embedment depth in concrete with f'c = 4000 psi for the resin anchor systems shall be that required to meet the minimum ultimate pullout strength in accordance with Sec 1039 but shall not be less than 5".

Cost of furnishing and installing the resin anchor systems, complete in place, will be considered completely covered by the contract unit price for Fabricated Sign Support Bracket.

Shift sign support bracket to minimum extent necessary to allow for installation of anchors into structure to clear barrier reinforcing steel and conduits. For Conduit details, see Sheet No. 37.

STATE OF MISSOURI
RYAN DAVID SHAW
NUMBER PE-2011000369
PROFESSIONAL ENGINEER
THIS SHEET HAS BEEN SIGNED, SEALED AND DATED ELECTRONICALLY

DATE PREPARED 4/2/2026
ROUTE I-270 | STATE MO
DISTRICT BR | SHEET NO. 39
COUNTY ST. LOUIS
JOB NO. JSL0021
CONTRACT ID.
PROJECT NO.
BRIDGE NO. A9494

DESCRIPTION | DATE

MISSOURI HIGHWAYS AND TRANSPORTATION COMMISSION
105 WEST CAPITOL
JEFFERSON CITY, MO 65102
1-888-ASK-MODOT (1-888-275-6636)

HDR Engineering, Inc.
1001 Highlands Plaza Drive
Suite 200
St. Louis, MO 63110
314-425-8300
Certificate of Authority: 000856

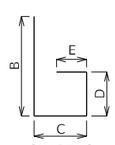

SHAPE 6
or 6S

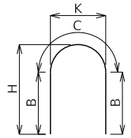

SHAPE 7

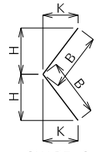

SHAPE 8
or 8S

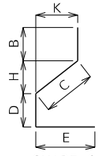

SHAPE 9
or 9S

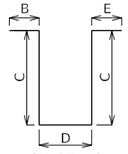

SHAPE 10
or 10S

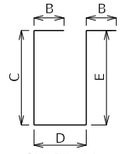

SHAPE 11
or 11S

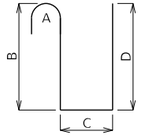

SHAPE 12

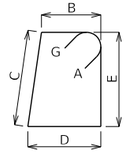

SHAPE 13S

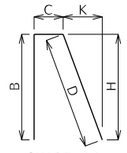

SHAPE 14
or 14S

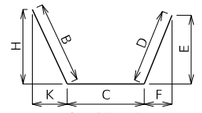

SHAPE 15
or 15S

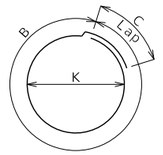

SHAPE 16

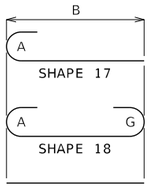

SHAPE 17
SHAPE 18
SHAPE 20

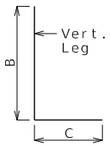

SHAPE 19
or 19S

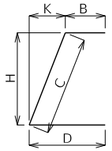

SHAPE 21
or 21S

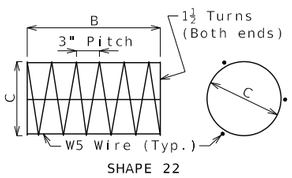

SHAPE 22

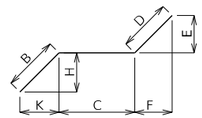

SHAPE 23
or 23S

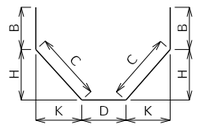

SHAPE 24
or 24S

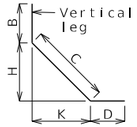

SHAPE 25
or 25S

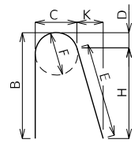

SHAPE 26

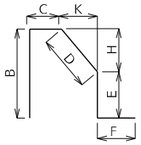

SHAPE 27S

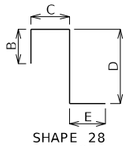

SHAPE 28
or 28S

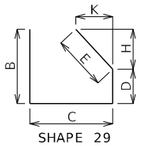

SHAPE 29
or 29S

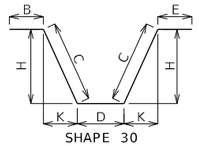

SHAPE 30
or 30S

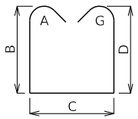

SHAPE 31S

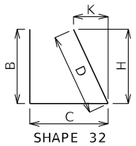

SHAPE 32
or 32S

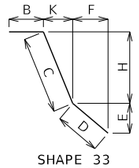

SHAPE 33
or 33S

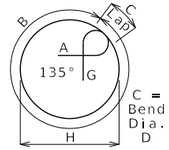

SHAPE 34S

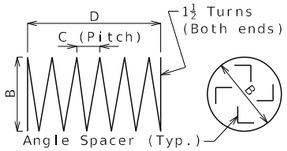

SHAPE 35 (1)



SHAPE 36

Finished Bend Diameters D and Hook Dimensions

Standard Pin Bend Shapes

Size	Case	D	A or G		J
			90°	180°	180°
#4	1	3"	8"	6"	4"
#5	1	3¾"	10"	7"	5"
#6	1	4½"	12"	8¼"	6"
#7	2	5¼"	14"	9⅜"	7"
	3	7"	15"	11½"	8¾"
#8	2	6"	16"	11"	8"
	3	8"	17"	13¼"	10"
#9	1	9½"	19½"	15½"	11¾"
#10	1	10¾"	22"	17½"	13¼"
#11	1	12"	24½"	19½"	14⅞"
#14	1	18¼"	31¼"	27½"	21⅝"
#18	1	24"	41½"	36¾"	28½"

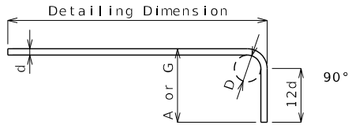

Stirrup Pin Bend Shapes (S)

Size	Case	D	A or G			H	J
			90°	135°	180°	135°	180°
#4	2	2"	4½"	4½"	5"	2⅝"	3"
	3	3"	5"	5¼"	6"	3"	4"
#5	2	2½"	5¾"	5¾"	5¾"	3⅝"	3¾"
	3	3¾"	6¼"	6½"	7"	3⅞"	5"
#6	1	4½"	12"	7¾"	8¼"	4⅝"	6"

Applicable for all grades of steel.

Case 1 applies to all reinforcement. Case 2 applies to all reinforcement except for galvanized bars. Case 3 applies to galvanized bars only.

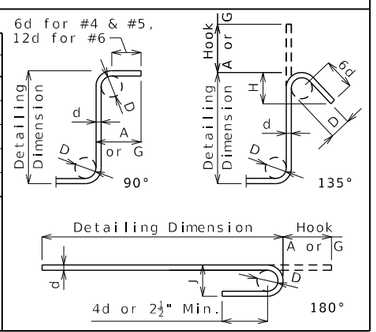

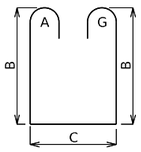

SHAPE 37S

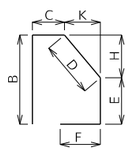

SHAPE 38S

BENDING DIAGRAMS

All dimensions are out to out.

Shapes ending with an S shall be bent in accordance with stirrup pin bend shapes.

Unless otherwise noted, finished bending diameter D is the same for all bends of a shape.

(1) Shall be a deformed or plain spiral bar or wire.

Four angle or channel spacers are required for each column spiral. Spacers are to be placed on inside of spirals. Length and weight of column spirals do not include splices or spacers.

Reinforcing Steel Totals (Pounds)

	Size	Substructure		Superstructure					Entire Bridge	
				Slab		Type D Barrier	Mod. Type D Barrier	Slip Form		
		Plain	Galv.	Plain	Galv.				Plain	Galv.
By Size	W5	0	0	0	0	0	0	0	0	0
	4	0	0	0	1,471	0	0	0	0	1,471
	5	0	20,953	0	45,991	10,307	939	551	0	78,741
	6	0	2,070	0	38,659	0	0	0	0	40,729
	7	0	0	0	3,240	0	0	0	0	3,240
	8	0	2,764	0	17,732	0	0	0	0	20,496
	9	0	0	0	0	0	0	0	0	0
	10	0	0	0	0	0	0	0	0	0
	11	0	63,803	0	0	0	0	0	0	63,803
	14	0	0	0	0	0	0	0	0	0
	18	0	0	0	0	0	0	0	0	0
By Type		0	89,590	0	107,093	10,307	939	551	0	208,480

All reinforcing steel shall be galvanized unless otherwise specified.

Products used to repair damaged zinc coating shall not contain aluminum.

Reinforcing steel (ASTM A706 Grade 60) fy = 60,000 psi.

BENDING DIAGRAMS AND REINFORCING STEEL TOTALS

Detailed September 2025
Checked September 2025

Note: This drawing is not to scale. Follow dimensions.

STATE OF MISSOURI
RYAN DAVID SHAW
NUMBER PE-2011000369
PROFESSIONAL ENGINEER
THIS SHEET HAS BEEN SIGNED, SEALED AND DATED ELECTRONICALLY

DATE PREPARED 4/2/2026

ROUTE	STATE
I-270	MO
DISTRICT	SHEET NO.
BR	40

COUNTY: ST. LOUIS
JOB NO.: JSL0021
CONTRACT ID.:
PROJECT NO.:
BRIDGE NO.: A9494

DESCRIPTION	DATE

MISSOURI HIGHWAYS AND TRANSPORTATION COMMISSION
105 WEST CAPITOL
JEFFERSON CITY, MO 65102
1-888-ASK-MODOT (1-888-275-6636)

HDR Engineering, Inc.
1001 Highlands Plaza Drive
Suite 200
St. Louis, MO 63110
314-425-8300
Certificate of Authority: 000856

Bill of Reinforcing Steel

No. Req.	Size/ Mark	Location	Codes C	SH	V	Dimensions B ft in.	C ft in.	D ft in.	E ft in.	F ft in.	H ft in.	K ft in.	Nom. Length ft in.	Actual Length ft in.	Weight lb
		Substructure													
		Intermediate Bent No. 2													
10	8 H200	BEAM	G	20		51 9.00							51 9	51 9	1,382
10	6 H201	BEAM	G	20		51 9.00							51 9	51 9	777
10	11 H202	BEAM	G	18		51 9.00							55 0	55 0	2,922
10	11 H203	BEAM	G	20		32 10.00							32 10	32 10	1,744
31	5 U200	BEAM	G	13S		4 9.00	4 9.00	4 9.00	4 9.00				20 1	19 8	636
7	5 U201	BEAM	G	10S			4 9.00	4 9.00					14 3	14 0	102
52	5 U202	BEAM	G	13S		4 9.00	5 1.25	4 9.00	5 1.25				20 10	20 5	1,108
14	5 U203	BEAM	G	10S			5 1.25	4 9.00					15 0	14 9	215
15	6 U204	BEAM	G	10S			12.00	4 9.00					6 9	6 5	145
24	11 V200	DRILLED SHAFT	G	20		60 0.00							60 0	60 0	7,651
21	11 V201	DRILLED SHAFT	G	20		53 0.00							53 0	53 0	5,913
24	11 V202	DRILLED SHAFT	G	17		51 5.00							53 0	53 0	6,758
21	11 V203	DRILLED SHAFT	G	17		58 5.00							60 0	60 0	6,694
3	5 P200	DRILLED SHAFT	G	35		3 6.00	6.00	83 3.00					1863 9	1836 0	5,745
3	5 P201	DRILLED SHAFT	G	35		3 6.00	4.00	18 10.00					654 3	644 6	2,017
45	5 P202	BEAM	G	34S		11 0.00	3.75				3 6.00		12 6	12 6	586
30	6 D200	BEAM	G	20		2 6.00							2 6	2 6	113
		Intermediate Bent No. 3													
10	8 H300	BEAM	G	20		51 9.00							51 9	51 9	1,382
10	6 H301	BEAM	G	20		51 9.00							51 9	51 9	777
10	11 H302	BEAM	G	18		51 9.00							55 0	55 0	2,922
10	11 H303	BEAM	G	20		32 10.00							32 10	32 10	1,744
31	5 U300	BEAM	G	13S		4 9.00	4 9.00	4 9.00	4 9.00				20 1	19 8	636
7	5 U301	BEAM	G	10S			4 9.00	4 9.00					14 3	14 0	102
52	5 U302	BEAM	G	13S		4 9.00	5 1.25	4 9.00	5 1.25				20 10	20 5	1,107
14	5 U303	BEAM	G	10S			5 1.25	4 9.00					15 0	14 9	215
15	6 U304	BEAM	G	10S			12.00	4 9.00					6 9	6 5	145
24	11 V300	DRILLED SHAFT	G	20		60 0.00							60 0	60 0	7,651
21	11 V301	DRILLED SHAFT	G	20		54 10.00							54 10	54 10	6,118
24	11 V302	DRILLED SHAFT	G	17		53 3.00							54 10	54 10	6,992
21	11 V303	DRILLED SHAFT	G	17		58 5.00							60 0	60 0	6,694
3	5 P300	DRILLED SHAFT	G	35		3 6.00	6.00	84 9.00					1896 9	1868 6	5,847
3	5 P301	DRILLED SHAFT	G	35		3 6.00	4.00	19 2.00					665 3	655 4	2,051
45	5 P302	BEAM	G	34S		11 0.00	3.75				3 6.00		12 6	12 6	586
30	6 D300	BEAM	G	20		2 6.00							2 6	2 6	113
		Superstructure													
		End Bent No. 1													
8	7 H100	BEAM	G	20		54 8.00							54 8	54 8	894
4	6 H101	BEAM	G	20		54 8.00							54 8	54 8	328
4	7 H102	BEAM	G	20		34 2.00							34 2	34 2	279
4	7 H103	BEAM	G	20		54 8.00							54 8	54 8	447
2	6 H104	DIAPHRAGM	G	20		2 2.00							2 2	2 2	7
6	6 H105	DIAPHRAGM	G	20		3 6.00							3 6	3 6	32
2	6 H106	DIAPHRAGM	G	20		2 9.00							2 9	2 9	8
5	6 H107	DIAPHRAGM	G	20		5 10.00							5 10	5 10	44
15	6 H108	DIAPHRAGM	G	20		8 7.00							8 7	8 7	193
5	6 H109	DIAPHRAGM	G	20		7 1.00							7 1	7 1	53
5	6 H110	DIAPHRAGM	G	20		54 8.00							54 8	54 8	411
11	8 H111	WING	G	20		13 1.00							13 1	13 1	384
11	8 H112	WING	G	6		13 1.00	17.00						14 6	14 3	419
11	8 H113	WING	G	20		13 1.00							13 1	13 1	384
11	8 H114	WING	G	6		13 1.00	17.00						14 6	14 3	419
4	8 H115	WING	G	20		14 6.00							14 6	14 6	155
4	8 H116	WING	G	6		14 6.00	17.00						15 11	15 8	167
4	8 H117	WING	G	20		14 6.00							14 6	14 6	155
4	8 H118	WING	G	6		14 6.00	17.00						15 11	15 8	167
6	5 H119	STRAND TIE	G	20		5 9.00							5 9	5 9	36
52	5 H120	APP. NOTCH	G	19		2 0.00	15.00						3 3	3 1	167
11	5 U100	BEAM	G	10S			5 11.25	2 9.00					14 8	14 5	165

Bill of Reinforcing Steel

No. Req.	Size/ Mark	Location	Codes C	SH	V	Dimensions B ft in.	C ft in.	D ft in.	E ft in.	F ft in.	H ft in.	K ft in.	Nom. Length ft in.	Actual Length ft in.	Weight lb
		Superstructure (cont.)													
		End Bent No. 1 (cont.)													
14	4 U101	BEAM	G	13S		2 9.00	2 8.00	2 9.00	2 8.00				11 8	11 4	106
15	5 U102	BEAM	G	10S			6 3.75	2 9.00					15 5	15 2	237
26	4 U103	BEAM	G	13S		2 9.00	3 0.25	2 9.00	3 0.25				12 5	12 1	210
1	4 U104	BEAM	G	10S			3 0.25	2 9.00					8 10	8 7	6
36	5 U105	DIAPHRAGM	G	10S			3 9.25	2 3.00					9 10	9 7	360
36	6 U106	DIAPHRAGM	G	19S		3 1.75	2 9.00						5 11	5 9	311
70	6 U107	DIAPHRAGM	G	19S		2 8.50	4 2.75						6 11	6 9	710
20	5 V100	BEAM	G	20		6 4.00							6 4	6 4	132
41	6 V101	DIAPHRAGM	G	20		3 1.00							3 1	3 1	190
26	6 V102	WING	G	20		7 1.00							7 1	7 1	277
26	6 V103	WING	G	20		6 3.00							6 3	6 3	244
10	6 F100	BRACE	G	23		20.00	5 1.00	20.00	13.50	14.50	13.50	14.50	8 5	8 4	125
4	6 F101	DIAPHRAGM	G	21		5 9.00	2 9.00				2 9.00	2.50	8 6	8 4	50
10	6 F102	BRACE	G	23		20.00	4 9.50	20.00	14.50	13.50	14.50	13.50	8 2	8 1	121
3	6 F103	DIAPHRAGM	G	21		5 8.00	2 9.00				2 9.00	2.50	8 5	8 3	37
		Intermediate Bent No. 2 Diaphragm													
10	6 H250	DIAPHRAGM	G	20		5 10.00							5 10	5 10	88
30	4 H251	DIAPHRAGM	G	20		8 7.00							8 7	8 7	172
10	6 H252	DIAPHRAGM	G	20		5 1.00							5 1	5 1	76
4	5 H253	STRAND TIE	G	20		4 6.00							4 6	4 6	19
8	5 H254	STRAND TIE	G	20		5 9.00							5 9	5 9	48
8	6 U250	DIAPHRAGM	G	28S			22.00	3 3.75	22.00				7 0	6 8	80
20	6 U251	DIAPHRAGM	G	28S			2 3.00	3 3.75	22.00				7 5	7 1	213
20	6 U252	DIAPHRAGM	G	28S			2 3.00	3 11.50	22.00				8 1	7 9	233
50	4 U253	DIAPHRAGM	G	28S			2 3.00	3 11.25	15.00				7 5	7 3	242
16	5 U254	DIAPHRAGM	G	6		4 5.00	11.00	17.25					6 9	6 6	108
4	5 U255	DIAPHRAGM	G	6		4 5.00	11.00						5 4	5 2	22
8	5 V250	DIAPHRAGM	G	20		4 0.00							4 0	4 0	33
		Intermediate Bent No. 3 Diaphragm													
10	6 H350	DIAPHRAGM	G	20		5 10.00							5 10	5 10	88
30	4 H351	DIAPHRAGM	G	20		8 7.00							8 7	8 7	172
10	6 H352	DIAPHRAGM	G	20		5 1.00							5 1	5 1	76
4	5 H353	STRAND TIE	G	20		4 6.00							4 6	4 6	19
8	5 H354	STRAND TIE	G	20		5 9.00							5 9	5 9	48
8	6 U350	DIAPHRAGM	G	28S			22.00	3 3.75	22.00				7 0	6 8	80
20	6 U351	DIAPHRAGM	G	28S			2 3.00	3 3.75	22.00				7 5	7 1	213
20	6 U352	DIAPHRAGM	G	28S			2 3.00	3 11.50	22.00				8 1	7 9	233
50	4 U353	DIAPHRAGM	G	28S			2 3.00	3 11.25	15.00				7 5	7 3	242
16	5 U354	DIAPHRAGM	G	6		4 5.00	11.00	17.25					6 9	6 6	108
4	5 U355	DIAPHRAGM	G	6		4 5.00	11.00						5 4	5 2	22
8	5 V350	DIAPHRAGM	G	20		4 0.00							4 0	4 0	33
		End Bent No. 4													
8	7 H400	BEAM	G	20		54 8.00							54 8	54 8	894
4	6 H401	BEAM	G	20		54 8.00							54 8	54 8	328
4	7 H402	BEAM	G	20		34 2.00							34 2	34 2	279
4	7 H403	BEAM	G	20		54 8.00							54 8	54 8	447
2	6 H404	DIAPHRAGM	G	20		2 2.00							2 2	2 2	7
6	6 H405	DIAPHRAGM	G	20		3 6.00							3 6	3 6	32
2	6 H406	DIAPHRAGM	G	20		2 9.00							2 9	2 9	8
5	6 H407	DIAPHRAGM	G	20		5 10.00							5 10	5 10	44
15	6 H408	DIAPHRAGM	G	20		8 7.00							8 7	8 7	193
5	6 H409	DIAPHRAGM	G	20		7 1.00							7 1	7 1	53
5	6 H410	DIAPHRAGM	G	20		54 8.00							54 8	54 8	411
11	8 H411	WING	G	20		13 1.00							13 1	13 1	384
11	8 H412	WING	G	6		13 1.00	17.00						14 6	14 3	419
11	8 H413	WING	G	20		13 1.00							13 1	13 1	384
11	8 H414	WING	G	6		13 1.00	17.00						14 6	14 3	419
4	8 H415	WING	G	20		14 6.00							14 6	14 6	155
4	8 H416	WING	G	6		14 6.00	17.00						15 11	15 8	167
4	8 H417	WING	G	20		14 6.00							14 6	14 6	155
4	8 H418	WING	G	6		14 6.00	17.00						15 11	15 8	167
6	5 H419	STRAND TIE	G	20		5 9.00							5 9	5 9	36

Nominal lengths are based on out to out dimensions shown in bending diagrams and are listed to the nearest inch for fabricator's use. Actual lengths are measured along centerline bar to the nearest inch. Weights are based on actual lengths.

For bending diagrams and steel reinforcing totals, see Sheet No. 40.

Detailed September 2025
Checked September 2025

Reinforcing steel (ASTM A706 Grade 60) fy = 60,000 psi.

Codes: C = Required coatings, where E = Epoxy Coated and G = Galvanized.

SH = Required shape, see bending diagrams.

V = Sets of varied bars and number of bars of each length. Bar dimensions vary in equal increments between dimensions shown on this line and the following line and the actual length dimension shown on this line and the following line vary by the specified increment.

BILL OF REINFORCING STEEL

Note: This drawing is not to scale. Follow dimensions.

STATE OF MISSOURI
RYAN DAVID SHAW
NUMBER PE-2011002389
PROFESSIONAL ENGINEER
THIS SHEET HAS BEEN SIGNED, SEALED AND DATED ELECTRONICALLY

DATE PREPARED 4/2/2026
ROUTE I-270 | STATE MO
DISTRICT BR | SHEET NO. 41
COUNTY ST. LOUIS
JOB NO. JSL0021
CONTRACT ID.
PROJECT NO.
BRIDGE NO. A9494

DESCRIPTION | DATE

MISSOURI HIGHWAYS AND TRANSPORTATION COMMISSION
105 WEST CAPITOL
JEFFERSON CITY, MO 65102
1-888-ASK-MODOT (1-888-275-6636)

HDR Engineering, Inc.
1001 Highlands Plaza Drive
Suite 200
St. Louis, MO 63110
314-425-8300
Certificate of Authority: 000856

Bill of Reinforcing Steel

No. Req.	Size/ Mark	Location	Codes C	SH	V	Dimensions B ft in.	C ft in.	D ft in.	E ft in.	F ft in.	H ft in.	K ft in.	Nom. Length ft in.	Actual Length ft in.	Weight lb
		Superstructure (cont.)													
		End Bent No. 4 (cont.)													
52	5 H420	APP. NOTCH	G	19		2 0.00	15.00						3 3	3 1	167
11	5 U400	BEAM	G	10S			5 11.25	2 9.00					14 8	14 5	165
14	4 U401	BEAM	G	13S		2 9.00	2 8.00	2 9.00	2 8.00				11 8	11 4	106
15	5 U402	BEAM	G	10S			6 3.50	2 9.00					15 4	15 2	237
26	4 U403	BEAM	G	13S		2 9.00	3 0.00	2 9.00	3 0.00				12 4	12 0	209
1	4 U404	BEAM	G	10S			3 0.00	2 9.00					8 9	8 7	6
36	5 U405	DIAPHRAGM	G	10S			3 9.00	2 3.00					9 9	9 7	358
36	6 U406	DIAPHRAGM	G	19S		3 1.50	2 9.00						5 11	5 9	311
70	6 U407	DIAPHRAGM	G	19S		2 8.50	4 2.50						6 11	6 9	710
20	5 V400	BEAM	G	20		6 4.00							6 4	6 4	132
41	6 V401	DIAPHRAGM	G	20		3 1.00							3 1	3 1	190
26	6 V402	WING	G	20		6 11.00							6 11	6 11	270
26	6 V403	WING	G	20		6 0.00							6 0	6 0	234
10	6 F400	BRACE	G	23		20.00	4 8.00	20.00	14.50	13.50	14.50	13.50	8 0	7 11	119
4	6 F401	DIAPHRAGM	G	21		5 7.00	2 9.00				2 9.00	2.50	8 4	8 2	49
10	6 F402	BRACE	G	23		20.00	5 2.25	20.00	13.50	14.50	13.50	14.50	8 6	8 5	126
3	6 F403	DIAPHRAGM	G	21		5 10.00	2 9.00				2 9.00	2.50	8 7	8 5	38
		Slab													
260	5 S1	SLAB	G	20		48 9.00							48 9	48 9	13,220
16	5 S2	SLAB	G	20	2	50 1.00							50 1	50 1	
		(INCR. = 6'-1 3/8")				7 3.00							7 3	7 3	478
361	5 S3	SLAB	G	20		54 5.00							54 5	54 5	20,489
180	5 S4	SLAB	G	20		48 9.00							48 9	48 9	9,152
84	8 S5	SLAB	G	20		22 0.00							22 0	22 0	4,934
84	8 S6	SLAB	G	20		37 0.00							37 0	37 0	8,298
16	6 S7	SLAB	G	20	2	50 2.00							50 2	50 2	
		(INCR. = 6'-1 1/4")				7 5.00							7 5	7 5	692
371	6 S8	SLAB	G	20		54 5.00							54 5	54 5	30,323
		Barriers													
		Type D													
10	5 K1	BARRIER	G	27S		3 5.00	9.25	5.25	2 11.75		5.25	1.00	7 7	7 4	76
38	5 K2	BARRIER	G	27S		3 5.00	9.25	14.50	2 2.75		14.25	2.75	7 8	7 5	294
2	5 K3	BARRIER	G	27S		22.50	9.25	14.50	7.75	12.00	14.25	2.75	5 6	5 2	11
10	5 K4	BARRIER	G	19S	2	2 6.25	10.00						3 4	3 3	
		(INCR. = 1/2")				2 4.25	10.00						3 2	3 1	33
10	5 K5	BARRIER	G	38S	2			18.25	9.50	8.25	18.00	4.00	3 0	2 10	
		(INCR. = 1/2")						20.50	9.50	8.25	20.00	4.50	3 2	3 0	30
6	5 K6	BARRIER	G	19S		2 6.75	10.00						3 5	3 4	21
6	5 K7	BARRIER	G	21S			2 6.50	10.00			2 6.00	6.25	3 5	3 3	20
18	5 K8	BARRIER	G	19S	2	2 8.50	10.00						3 7	3 6	
		(INCR. = 3/4")				3 2.50	10.00						4 1	4 0	69
18	5 K9	BARRIER	G	21S	2		2 8.50	10.00			2 7.75	6.75	3 7	3 5	
		(INCR. = 3/4")					3 2.50	10.00			3 1.75	7.75	4 1	3 11	68
16	5 K10	BARRIER	G	19S		3 3.00	10.00						4 1	4 0	67
16	5 K11	BARRIER	G	21S			3 3.00	10.00			3 2.25	7.75	4 1	3 11	65
12	5 K12	BARRIER	G	20		14 9.00							14 9	14 9	185
6	5 K13	BARRIER	G	20	2	8 0.00							8 0	8 0	
		(INCR. = 3'-0")				14 0.00							14 0	14 0	69
12	5 K14	BARRIER	G	20		14 10.00							14 10	14 10	186
6	5 K15	BARRIER	G	20	2	8 1.00							8 1	8 1	
		(INCR. = 3'-0")				14 1.00							14 1	14 1	69
390	5 R1	BARRIER	G	26S		3 3.00	5.50	2.25	3 1.25	5.50	3 0.75	6.75	6 10	6 10	2,780
390	5 R2	BARRIER	G	19S		20.50	9.50						2 6	2 5	983
390	5 R3	BARRIER	G	27S			9.50	15.25	5.00	12.00	15.00	3.00	3 6	3 4	1,356
80	5 R4	BARRIER	G	20		11 9.00							11 9	11 9	980
10	5 R5	BARRIER	G	20		40 10.00							40 10	40 10	426
40	5 R6	BARRIER	G	20		35 11.00							35 11	35 11	1,498
10	5 R7	BARRIER	G	20		31 0.00							31 0	31 0	323
10	5 R8	BARRIER	G	20		38 6.00							38 6	38 6	402
10	5 R9	BARRIER	G	20		28 4.00							28 4	28 4	296
		Modified Type D													
42	5 M1	MODIFIED BARRIER	G	26S		3 3.00	6.50	2.25	3 1.25	6.50	3 0.75	6.75	6 11	6 11	303
42	5 M2	MODIFIED BARRIER	G	19S		20.50	10.50						2 7	2 6	110
42	5 M3	MODIFIED BARRIER	G	27S			10.50	15.25	5.00		15.00	3.00	2 7	2 6	110

Bill of Reinforcing Steel

No. Req.	Size/ Mark	Location	Codes C	SH	V	Dimensions B ft in.	C ft in.	D ft in.	E ft in.	F ft in.	H ft in.	K ft in.	Nom. Length ft in.	Actual Length ft in.	Weight lb
		Superstructure (cont.)													
		Modified Type D (cont.)													
10	5 M4	MODIFIED BARRIER	G	20		19 10.00							19 10	19 10	207
10	5 M5	MODIFIED BARRIER	G	20		20 0.00							20 0	20 0	209
		Slip Form													
44	5 C1	SLIP FORM	G	20		12 0.00							12 0	12 0	551

Nominal lengths are based on out to out dimensions shown in bending diagrams and are listed to the nearest inch for fabricator's use. Actual lengths are measured along centerline bar to the nearest inch. Weights are based on actual lengths.

For bending diagrams and steel reinforcing totals, see Sheet No. 40.

Detailed September 2025
Checked September 2025

Reinforcing steel (ASTM A706 Grade 60) fy = 60,000 psi.

Note: This drawing is not to scale. Follow dimensions.

Codes: C = Required coatings, where E = Epoxy Coated and G = Galvanized.

SH = Required shape, see bending diagrams.

V = Sets of varied bars and number of bars of each length. Bar dimensions vary in equal increments between dimensions shown on this line and the following line and the actual length dimension shown on this line and the following line vary by the specified increment.

BILL OF REINFORCING STEEL

STATE OF MISSOURI
RYAN DAVID SHAW
NUMBER PE-2011000369
PROFESSIONAL ENGINEER
THIS SHEET HAS BEEN SIGNED, SEALED AND DATED ELECTRONICALLY

DATE PREPARED 4/2/2026
ROUTE I-270 | STATE MO
DISTRICT BR | SHEET NO. 42
COUNTY ST. LOUIS
JOB NO. JSL0021
CONTRACT ID.
PROJECT NO.
BRIDGE NO. A9494

DESCRIPTION | DATE

MISSOURI HIGHWAYS AND TRANSPORTATION COMMISSION
105 WEST CAPITOL
JEFFERSON CITY, MO 65102
1-888-ASK-MODOT (1-888-275-6636)

HDR Engineering, Inc.
1001 Highlands Plaza Drive
Suite 200
St. Louis, MO 63110
314-425-8300
Certificate of Authority: 000856

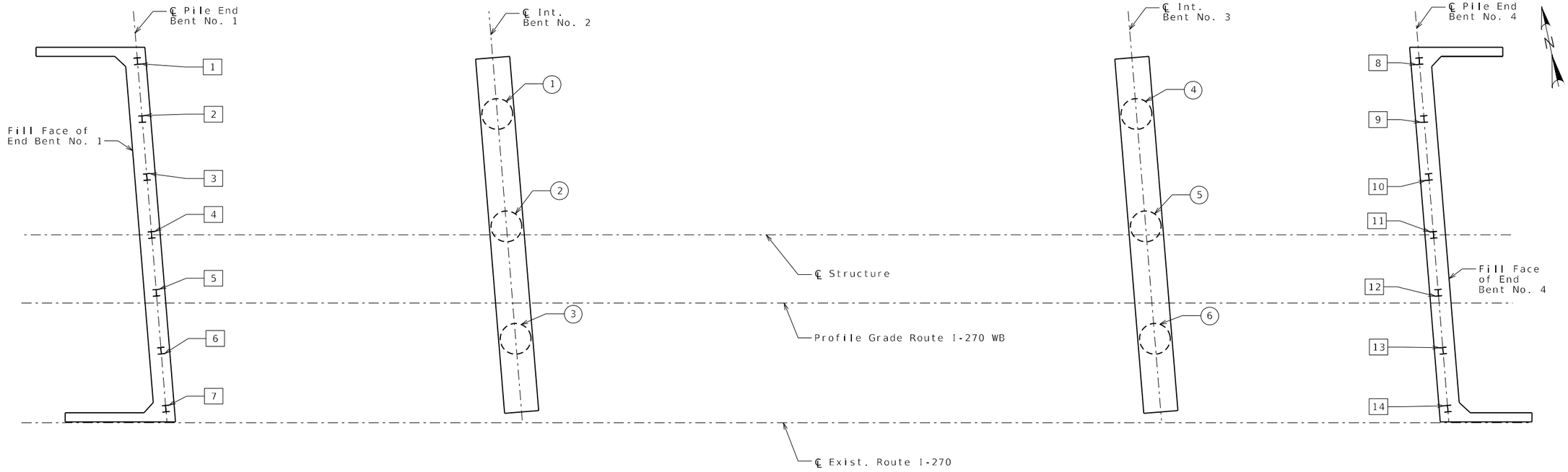

PART PLAN SHOWING PILE & DRILLED SHAFT NUMBERING FOR RECORDING AS-BUILT PILE DATA & AS-BUILT DRILLED SHAFT DATA

As-Built Pile Data

Pile No.	Length in Place (ft)	Computed Nominal Axial Compressive Resistance (kips)	Remarks
			End Bent No. 1
1			
2			
3			
4			
5			
6			
7			

As-Built Drilled Shaft Data

Shaft No.	Top of Sound Rock (Elev.)	Tip of Casing (Elev.)	Bottom of Rock Socket (Elev.)	Remarks
				Int. Bent No. 2
1				
2				
3				

As-Built Drilled Shaft Data

Shaft No.	Top of Sound Rock (Elev.)	Tip of Casing (Elev.)	Bottom of Rock Socket (Elev.)	Remarks
				Int. Bent No. 3
4				
5				
6				

As-Built Pile Data

Pile No.	Length in Place (ft)	Computed Nominal Axial Compressive Resistance (kips)	Remarks
			End Bent No. 4
8			
9			
10			
11			
12			
13			
14			

Note:
Indicate in remarks column:
A. Pile type and grade
B. Batter
C. Driven to practical refusal

This sheet to be completed by MoDOT construction personnel.

AS-BUILT PILE & DRILLED SHAFT DATA

Detailed September 2025
Checked September 2025

Note: This drawing is not to scale. Follow dimensions.

STATE OF MISSOURI
RYAN DAVID SHAW
NUMBER PE-2011000369
PROFESSIONAL ENGINEER
THIS SHEET HAS BEEN SIGNED, SEALED AND DATED ELECTRONICALLY

DATE PREPARED 4/2/2026

ROUTE	STATE
I-270	MO
DISTRICT	SHEET NO.
BR	43

COUNTY: ST. LOUIS
JOB NO.: JSL0021
CONTRACT ID.:
PROJECT NO.:
BRIDGE NO.: A9494

DESCRIPTION	DATE

MISSOURI HIGHWAYS AND TRANSPORTATION COMMISSION
105 WEST CAPITOL
JEFFERSON CITY, MO 65102
1-888-ASK-MODOT (1-888-275-6636)

HDR Engineering, Inc.
1001 Highlands Plaza Drive
Suite 200
St. Louis, MO 63110
314-425-8300
Certificate of Authority: 000856

Missouri Department of Transportation
Construction and Materials

BORING NO. AB-3
Page 1 of 3

Job No.: MG24029 **County:** St. Louis **Route:** Bellefontaine
Design: **Skew:** **Location:** St. Louis County
Bent: **Logged By:** J. Stauffer **Operator:** S. Conrad
Station: **Northing:** 1069368.143 **Date of Work:** 12/16/24-12/18/24
Offset: **Easting:** 899711.185 **Depth to Water:** 34.0
Elevation: 498.8 **Requested Northing:** **Depth Hole Open:**
Requested Station: **Requested Easting:** **Time Change:**
Requested Offset: **Equipment:** CME 55LC ,Split-Spoon Sampler, Shelby Tube, NQ
Requested Elevation: **Location Note:**
Drill No.: UES **Hammer Efficiency:** 79% **Drilling Method:** Hollow Stem Auger

Depth (ft)	Graphic	Description	Elevation (ft)	Sample Type	REC % (RQD %)	Blow Counts (N_{60})	Shear Data	Field Tests	Index Tests
0		0.0-0.4' CONCRETE (5")							
		0.4-1.0' FILL: Crushed limestone (7")							
		1.0-22.0' FILL: Brown and grey, lean CLAY (CL)	495		83		Qu Test Results UCS = 5.40 ksf MC = 21.6% γ_{moist} = 135.22 pcf	PP >4.50 tsf	MC = 21.6%
5									
			490		33	1-3-2 (7)		PP = 2.00 tsf	MC = 23.5%
10									
			485		56	2-3-4 (9)		PP = 1.50 tsf	MC = 21.2%
15									
			480		94	4-5-8 (17)		PP = 2.50 tsf	MC = 21.7%
20									
		22.0-27.0' Grey, lean CLAY (CL), trace sand	475		67	6-4-3 (9)		PP = 0.75 tsf	MC = 24.7%
25									
		27.0-37.0' Dark grey, fat CLAY (CH)	470		100	2-3-4 (9)		PP = 2.00 tsf	MC = 25.4%
30									
35		▽	465		100	2-2-4 (8)		PP = 2.00 tsf	MC = 27.4%

N_{60} = (Em/60)Nm N_{60} - Corrected N value for standard 60% SPT efficiency; Em - Measured hammer efficiency in percent; Nm - Observed N-value; (1) = Assumed, (2) = Actual

Coordinate System: **Coordinate Zone:** **Coordinate Proj. Factor:**
Coordinate Datum: **Coordinate Units:** U.S. Survey Feet

* Persons using this information are cautioned that the materials shown are determined by the equipment noted and accuracy of the "log of materials" is limited thereby and by judgement of the operator. THIS INFORMATION IS FOR DESIGN PURPOSES ONLY.

(Continued Next Page)

Missouri Department of Transportation
Construction and Materials

BORING NO. AB-3
Page 2 of 3

Job No.: MG24029 **County:** St. Louis **Route:** Bellefontaine
Design: **Skew:** **Location:** St. Louis County
Bent: **Logged By:** J. Stauffer **Operator:** S. Conrad
Station: **Northing:** 1069368.143 **Date of Work:** 12/16/24-12/18/24
Offset: **Easting:** 899711.185 **Depth to Water:** 34.0
Elevation: 498.8 **Requested Northing:** **Depth Hole Open:**
Requested Station: **Requested Easting:** **Time Change:**
Requested Offset: **Equipment:** CME 55LC ,Split-Spoon Sampler, Shelby Tube, NQ
Requested Elevation: **Location Note:**
Drill No.: UES **Hammer Efficiency:** 79% **Drilling Method:** Hollow Stem Auger

Depth (ft)	Graphic	Description	Elevation (ft)	Sample Type	REC % (RQD %)	Blow Counts (N_{60})	Shear Data	Field Tests	Index Tests
35		27.0-37.0' Dark grey, fat CLAY (CH) *(continued)*							
		37.0-52.0' Grey and brown, lean CLAY (CL)	460		100	2-2-2 (5)		PP = 1.00 tsf	MC = 30.4%
40									
			455		100	2-2-3 (7)		PP = 1.00 tsf	MC = 26.8%
45									
			450		100	1-2-3 (7)		PP = 1.25 tsf	MC = 22.7%
50									
		52.0-62.0' Grey, fat CLAY (CH)	445		100	3-2-3 (7)		PP = 1.25 tsf	MC = 36.2%
55									
			440		100	3-3-4 (9)		PP = 1.75 tsf	MC = 40.7%
60									
		62.0-67.0' Grey, sandy lean CLAY (CL)	435		100	1-2-2 (5)		PP = 1.75 tsf	MC = 20.6%
65									
		67.0-77.0' Grey, SAND (SP), fine grained, poorly graded	430		100	2-5-8 (17)			MC = 19.2%
70									

N_{60} = (Em/60)Nm N_{60} - Corrected N value for standard 60% SPT efficiency; Em - Measured hammer efficiency in percent; Nm - Observed N-value; (1) = Assumed, (2) = Actual

Coordinate System: **Coordinate Zone:** **Coordinate Proj. Factor:**
Coordinate Datum: **Coordinate Units:** U.S. Survey Feet

* Persons using this information are cautioned that the materials shown are determined by the equipment noted and accuracy of the "log of materials" is limited thereby and by judgement of the operator. THIS INFORMATION IS FOR DESIGN PURPOSES ONLY.

(Continued Next Page)

BORING DATA

Note: For location of borings, see Sheet No. 1.

Detailed September 2025
Checked September 2025

Note: This drawing is not to scale. Follow dimensions.

STATE OF MISSOURI
RYAN DAVID SHAW
NUMBER PE-2011000369
PROFESSIONAL ENGINEER
THIS SHEET HAS BEEN SIGNED, SEALED AND DATED ELECTRONICALLY

DATE PREPARED 4/2/2026
ROUTE I-270 | STATE MO
DISTRICT BR | SHEET NO. 44
COUNTY ST. LOUIS
JOB NO. JSL0021
CONTRACT ID.
PROJECT NO.
BRIDGE NO. A9494

DESCRIPTION | DATE

MISSOURI HIGHWAYS AND TRANSPORTATION COMMISSION
105 WEST CAPITOL
JEFFERSON CITY, MO 65102
1-888-ASK-MODOT (1-888-275-6636)

HDR Engineering, Inc.
1001 Highlands Plaza Drive
Suite 200
St. Louis, MO 63110
314-425-8300
Certificate of Authority: 000856

LETTER BOREHOLE - MODOT_20151118.GDT - 1/31/25 08:59 - G:\PROJECT FILES\2024\MG24029 I-270 GAP FROM ROUTE 367 TO LILAC AVENUE\FIELD DATA\BELLEFONTAINE RD\I-270_BELLEFONTAINE DECEMBER MODOT LOGS.GPJ

Missouri Department of Transportation
Construction and Materials

BORING NO. AB-3
Page 3 of 3

Job No.: MG24029 **County:** St. Louis **Route:** Bellefontaine
Design: **Skew:** **Location:** St. Louis County
Bent: **Logged By:** J. Stauffer **Operator:** S. Conrad
Station: **Northing:** 1069368.143 **Date of Work:** 12/16/24-12/18/24
Offset: **Easting:** 899711.185 **Depth to Water:** 34.0
Elevation: 498.8 **Requested Northing:** **Depth Hole Open:**
Requested Station: **Requested Easting:** **Time Change:**
Requested Offset: **Equipment:** CME 55LC ,Split-Spoon Sampler, Shelby Tube, NQ
Requested Elevation: **Location Note:**
Drill No.: UES **Hammer Efficiency:** 79% **Drilling Method:** Hollow Stem Auger

Depth (ft)	Graphic	Description	Elevation (ft)	Sample Type	REC % (RQD %)	Blow Counts (N_{60})	Shear Data	Field Tests	Index Tests
70		67.0-77.0' Grey, SAND (SP), fine grained, poorly graded *(continued)*							
			425		100	2-7-13 (26)			MC = 22.0%
75		77.0-80.0' Grey, highly weathered SHALE							
			420		0	9-18-50/0.4'			
80		80.0-90.0' Grey, SHALE, very soft to soft, moderately weathered, thin to massive bedded, very finely grained							
			415		100 (100)				
85									
			410		100 (100)				
90		Refusal at 80.0 feet. Bottom of borehole at 90.0 feet.							

N_{60} = (Em/60)Nm N_{60} - Corrected N value for standard 60% SPT efficiency; Em - Measured hammer efficiency in percent; Nm - Observed N-value; (1) = Assumed, (2) = Actual

Coordinate System: **Coordinate Zone:** **Coordinate Proj. Factor:**
Coordinate Datum: **Coordinate Units:** U.S. Survey Feet

* Persons using this information are cautioned that the materials shown are determined by the equipment noted and accuracy of the "log of materials" is limited thereby and by judgement of the operator. THIS INFORMATION IS FOR DESIGN PURPOSES ONLY.

LETTER BOREHOLE - MODOT_20151118.GDT - 1/31/25 08:59 - G:\PROJECT FILES\2024\MG24029 I-270 GAP FROM ROUTE 367 TO LILAC AVENUE\FIELD DATA\BELLEFONTAINE RDII-270_BELLEFONTAINE DECEMBER MODOT LOGS.GPJ

Missouri Department of Transportation
Construction and Materials

BORING NO. A9494-101
Page 1 of 3

Job No.: MG24029 **County:** St. Louis **Route:** Bellefontaine
Design: **Skew:** **Location:** St. Louis County
Bent: **Logged By:** B. Nepal **Operator:** G. Shetley
Station: **Northing:** 1069463.086 **Date of Work:** 06/03/24-06/04/24
Offset: **Easting:** 899873.345 **Depth to Water:** 4.0
Elevation: 480.7 **Requested Northing:** **Depth Hole Open:**
Requested Station: **Requested Easting:** **Time Change:**
Requested Offset: **Equipment:** CME 750Y ,Spit-Spoon Sampler, Shelby Tube, NQ
Requested Elevation: **Location Note:**
Drill No.: UES **Hammer Efficiency:** 95% **Drilling Method:** Hollow Stem Auger

Depth (ft)	Graphic	Description	Elevation (ft)	Sample Type	REC % (RQD %)	Blow Counts (N_{60})	Shear Data	Field Tests	Index Tests
0		0.0-0.3' ASPHALT (3")	480						
		0.3-0.8' CONCRETE (6")							
		0.8-6.0' FILL: CRUSHED LIMESTONE							
5		6.0-31.0' Grey, lean CLAY (CL)	475		0				
					67		Qu Test Results UCS = 6.76 ksf MC = 21.2% γ_{moist} = 128.47 pcf	PP = 2.50 tsf	MC = 21.2%
10			470						
15			465		89	2-2-3 (8)		PP = 2.25 tsf	MC = 26.3%
20			460		100		Qu Test Results MC = 30.9% γ_{moist} = 116.24 pcf	PP = 1.00 tsf	LL = 41 PL = 18 MC = 30.9%
25			455		100	0-1-2 (5)		PP = 0.50 tsf	MC = 30.5%
30		28.5' - fine sand and gravel seam at 28.5 ft.			86	2-6-4 (16)		PP = 2.00 tsf	MC = 24.9%

N_{60} = (Em/60)Nm N_{60} - Corrected N value for standard 60% SPT efficiency; Em - Measured hammer efficiency in percent; Nm - Observed N-value; (1) = Assumed, (2) = Actual

Coordinate System: **Coordinate Zone:** **Coordinate Proj. Factor:**
Coordinate Datum: **Coordinate Units:** U.S. Survey Feet

* Persons using this information are cautioned that the materials shown are determined by the equipment noted and accuracy of the "log of materials" is limited thereby and by judgement of the operator. THIS INFORMATION IS FOR DESIGN PURPOSES ONLY.

(Continued Next Page)

LETTER BOREHOLE - MODOT_20151118.GDT - 1/31/25 08:59 - G:\PROJECT FILES\2024\MG24029 I-270 GAP FROM ROUTE 367 TO LILAC AVENUE\FIELD DATA\BELLEFONTAINE RDII-270_BELLEFONTAINE DECEMBER MODOT LOGS.GPJ

STATE OF MISSOURI
RYAN DAVID SHAW
NUMBER PE-2011000369
PROFESSIONAL ENGINEER
THIS SHEET HAS BEEN SIGNED, SEALED AND DATED ELECTRONICALLY

DATE PREPARED 4/2/2026
ROUTE I-270 | STATE MO
DISTRICT BR | SHEET NO. 45
COUNTY ST. LOUIS
JOB NO. JSL0021
CONTRACT ID.
PROJECT NO.
BRIDGE NO. A9494

DESCRIPTION | DATE

MISSOURI HIGHWAYS AND TRANSPORTATION COMMISSION
105 WEST CAPITOL
JEFFERSON CITY, MO 65102
1-888-ASK-MODOT (1-888-275-6636)

HDR Engineering, Inc.
1001 Highlands Plaza Drive
Suite 200
St. Louis, MO 63110
314-425-8300
Certificate of Authority: 000856

BORING DATA

Note: For location of borings, see Sheet No. 1.

Detailed September 2025
Checked September 2025

Note: This drawing is not to scale. Follow dimensions.

c:\pwworking\central01\d4975500\B_A9494_045_SL0021.dgn 12:36:58 PM 4/2/2026

Missouri Department of Transportation
Construction and Materials

BORING NO. A9494-101
Page 2 of 3

Job No.: MG24029 **County:** St. Louis **Route:** Bellefontaine
Design: **Skew:** **Location:** St. Louis County
Bent: **Logged By:** B. Nepal **Operator:** G. Shetley
Station: **Northing:** 1069463.086 **Date of Work:** 06/03/24-06/04/24
Offset: **Easting:** 899873.345 **Depth to Water:** 4.0
Elevation: 480.7 **Requested Northing:** **Depth Hole Open:**
Requested Station: **Requested Easting:** **Time Change:**
Requested Offset: **Equipment:** CME 750Y ,Split-Spoon Sampler, Shelby Tube, NQ
Requested Elevation: **Location Note:**
Drill No.: UES **Hammer Efficiency:** 95% **Drilling Method:** Hollow Stem Auger

Depth (ft)	Graphic	Description	Elevation (ft)	Sample Type	REC % (RQD %)	Blow Counts (N_{60})	Shear Data	Field Tests	Index Tests
30		6.0-31.0' Grey, lean CLAY (CL) *(continued)*	450						
		31.0-46.0' Bluish grey and brown, fat CLAY (CH)							
				X	100	2-3-4 (11)		PP = 2.50 tsf	MC = 30.1%
35			445						
		38.5' - 6.0" fine sand seam at 38.5 ft.		X	100	2-3-3 (10)		PP = 1.50 tsf	MC = 20.8%
40			440						
				X	100	2-2-3 (8)		PP = 2.50 tsf	MC = 40.7%
45		46.0-52.0' Dark grey, sandy lean CLAY (CL), trace gravel	435						
				X	100	2-2-3 (8)		PP = 1.50 tsf	MC = 23.3%
50			430						
		52.0-56.0' Grey, lean CLAY (CL), trace gravel and coal fragments		X	100	50/0.5'		PP = 2.50 tsf	MC = 15.6%
55			425						
		56.0-60.0' Grey, clayey SHALE		X	65	27-50-50/0.3'		PP = 4.50 tsf	MC = 15.3%
60									

N_{60} = (Em/60)Nm N_{60} - Corrected N value for standard 60% SPT efficiency; Em - Measured hammer efficiency in percent; Nm - Observed N-value; (1) = Assumed, (2) = Actual

Coordinate System: **Coordinate Zone:** **Coordinate Proj. Factor:**
Coordinate Datum: **Coordinate Units:** U.S. Survey Feet

* Persons using this information are cautioned that the materials shown are determined by the equipment noted and accuracy of the "log of materials" is limited thereby and by judgement of the operator. THIS INFORMATION IS FOR DESIGN PURPOSES ONLY.

(Continued Next Page)

Missouri Department of Transportation
Construction and Materials

BORING NO. A9494-101
Page 3 of 3

Job No.: MG24029 **County:** St. Louis **Route:** Bellefontaine
Design: **Skew:** **Location:** St. Louis County
Bent: **Logged By:** B. Nepal **Operator:** G. Shetley
Station: **Northing:** 1069463.086 **Date of Work:** 06/03/24-06/04/24
Offset: **Easting:** 899873.345 **Depth to Water:** 4.0
Elevation: 480.7 **Requested Northing:** **Depth Hole Open:**
Requested Station: **Requested Easting:** **Time Change:**
Requested Offset: **Equipment:** CME 750Y ,Split-Spoon Sampler, Shelby Tube, NQ
Requested Elevation: **Location Note:**
Drill No.: UES **Hammer Efficiency:** 95% **Drilling Method:** Hollow Stem Auger

Depth (ft)	Graphic	Description	Elevation (ft)	Sample Type	REC % (RQD %)	Blow Counts (N_{60})	Shear Data	Field Tests	Index Tests
60		60.0-70.0' Grey and brown, SHALE, slightly to moderately weathered, soft, very finely grained	420		86 (36)				
65			415		100 (80)				
70					100 (100)				
		Refusal at 60.0 feet. Bottom of borehole at 70.0 feet.							

N_{60} = (Em/60)Nm N_{60} - Corrected N value for standard 60% SPT efficiency; Em - Measured hammer efficiency in percent; Nm - Observed N-value; (1) = Assumed, (2) = Actual

Coordinate System: **Coordinate Zone:** **Coordinate Proj. Factor:**
Coordinate Datum: **Coordinate Units:** U.S. Survey Feet

* Persons using this information are cautioned that the materials shown are determined by the equipment noted and accuracy of the "log of materials" is limited thereby and by judgement of the operator. THIS INFORMATION IS FOR DESIGN PURPOSES ONLY.

STATE OF MISSOURI
RYAN DAVID SHAW
NUMBER PE-2011000369
PROFESSIONAL ENGINEER
THIS SHEET HAS BEEN SIGNED, SEALED AND DATED ELECTRONICALLY

DATE PREPARED 4/2/2026
ROUTE I-270 | STATE MO
DISTRICT BR | SHEET NO. 46
COUNTY ST. LOUIS
JOB NO. JSL0021
CONTRACT ID.
PROJECT NO.
BRIDGE NO. A9494

DESCRIPTION | DATE

MISSOURI HIGHWAYS AND TRANSPORTATION COMMISSION
105 WEST CAPITOL
JEFFERSON CITY, MO 65102
1-888-ASK-MODOT (1-888-275-6636)

HDR Engineering, Inc.
1001 Highlands Plaza Drive
Suite 200
St. Louis, MO 63110
314-425-8300
Certificate of Authority: 000856

LETTER BOREHOLE - MODOT_20151118.GDT - 1/31/25 08:59 - G:\PROJECT FILES\2024\MG24029 I-270 GAP FROM ROUTE 367 TO LILAC AVENUE\FIELD DATA\BELLEFONTAINE RDII-270_BELLEFONTAINE DECEMBER MODOT LOGS.GPJ

BORING DATA

Note: For location of borings, see Sheet No. 1.

Detailed September 2025
Checked September 2025

Note: This drawing is not to scale. Follow dimensions.

c:\pwworking\central01\d4975500\B_A9494_046_SL0021.dgn 12:37:28 PM 4/2/2026

Missouri Department of Transportation
Construction and Materials

BORING NO. P-3 (ALT)
Page 1 of 3

Job No.: MG24029 **County:** St. Louis **Route:** Bellefontaine
Design: **Skew:** **Location:** St. Louis County
Bent: **Logged By:** J. Stauffer **Operator:** N. Urban
Station: **Northing:** 1069374.557 **Date of Work:** 12/04/24-12/09/24
Offset: **Easting:** 899795.945 **Depth to Water:**
Elevation: 480.5 **Requested Northing:** **Depth Hole Open:**
Requested Station: **Requested Easting:** **Time Change:**
Requested Offset: **Equipment:** CME 55HTX ,Split-Spoon Sampler, NQ
Requested Elevation: **Location Note:**
Drill No.: UES **Hammer Efficiency:** 80% **Drilling Method:** Hollow Stem Auger

Depth (ft)	Graphic	Description	Elevation (ft)	Sample Type	REC % (RQD %)	Blow Counts (N_{60})	Shear Data	Field Tests	Index Tests
0		0.0-0.3' ASPHALT (3")	480						
		0.3-1.1' CONCRETE (10"), with rebar							
		1.1-53.0' Drilled without sampling to 60.0 ft.							
5			475						
10			470						
15			465						
20			460						
25			455						
30			450						
35									

N_{60} = (Em/60)Nm N_{60} - Corrected N value for standard 60% SPT efficiency; Em - Measured hammer efficiency in percent; Nm - Observed N-value; (1) = Assumed, (2) = Actual

Coordinate System: **Coordinate Zone:** **Coordinate Proj. Factor:**
Coordinate Datum: **Coordinate Units:** U.S. Survey Feet

* Persons using this information are cautioned that the materials shown are determined by the equipment noted and accuracy of the "log of materials" is limited thereby and by judgement of the operator. THIS INFORMATION IS FOR DESIGN PURPOSES ONLY.

(Continued Next Page)

Missouri Department of Transportation
Construction and Materials

BORING NO. P-3 (ALT)
Page 2 of 3

Job No.: MG24029 **County:** St. Louis **Route:** Bellefontaine
Design: **Skew:** **Location:** St. Louis County
Bent: **Logged By:** J. Stauffer **Operator:** N. Urban
Station: **Northing:** 1069374.557 **Date of Work:** 12/04/24-12/09/24
Offset: **Easting:** 899795.945 **Depth to Water:**
Elevation: 480.5 **Requested Northing:** **Depth Hole Open:**
Requested Station: **Requested Easting:** **Time Change:**
Requested Offset: **Equipment:** CME 55HTX ,Split-Spoon Sampler, NQ
Requested Elevation: **Location Note:**
Drill No.: UES **Hammer Efficiency:** 80% **Drilling Method:** Hollow Stem Auger

Depth (ft)	Graphic	Description	Elevation (ft)	Sample Type	REC % (RQD %)	Blow Counts (N_{60})	Shear Data	Field Tests	Index Tests
35		1.1-53.0' Drilled without sampling to 60.0 ft. *(continued)*	445						
40			440						
45			435						
50			430						
55		53.0-60.0' Grey, weathered SHALE 53.1' - rough drilling observed at 53.0 ft.	425		70	33-50/0.3'		PP = 4.00 tsf	MC = 14.3%
60		60.0-67.8' Grey, SHALE, very soft to soft, moderately weathered, thin bedded, very finely grained 60.5' - 6" limestone seam 63.5' - compressive strength = 46 psi 65.0' - compressive strength = 44 psi	420		100 (+2)				
65			415		55 (+5)				
70		67.8-70.0' - 27" Core Loss (67.75-70.0 ft.)							

N_{60} = (Em/60)Nm N_{60} - Corrected N value for standard 60% SPT efficiency; Em - Measured hammer efficiency in percent; Nm - Observed N-value; (1) = Assumed, (2) = Actual

Coordinate System: **Coordinate Zone:** **Coordinate Proj. Factor:**
Coordinate Datum: **Coordinate Units:** U.S. Survey Feet

* Persons using this information are cautioned that the materials shown are determined by the equipment noted and accuracy of the "log of materials" is limited thereby and by judgement of the operator. THIS INFORMATION IS FOR DESIGN PURPOSES ONLY.

(Continued Next Page)

LETTER BOREHOLE - MODOT_20151118.GDT - 1/31/25 08:59 - G:\PROJECT FILES\2024\MG24C29 I-270 GAP FROM ROUTE 367 TO LILAC AVENUE\FIELD DATA\BELLEFONTAINE RDII-270_BELLEFONTAINE DECEMBER MODOT LOGS.GPJ

LETTER BOREHOLE - MODOT_20151118.GDT - 1/31/25 08:59 - G:\PROJECT FILES\2024\MG24029 I-270 GAP FROM ROUTE 367 TO LILAC AVENUE\FIELD DATA\BELLEFONTAINE RDII-270_BELLEFONTAINE DECEMBER MODOT LOGS.GPJ

BORING DATA

Note: For location of borings, see Sheet No. 1.

Detailed September 2025
Checked September 2025

Note: This drawing is not to scale. Follow dimensions.

STATE OF MISSOURI
RYAN DAVID SHAW
NUMBER PE-2011000369
PROFESSIONAL ENGINEER
THIS SHEET HAS BEEN SIGNED, SEALED AND DATED ELECTRONICALLY

DATE PREPARED 4/2/2026
ROUTE I-270 | STATE MO
DISTRICT BR | SHEET NO. 47
COUNTY ST. LOUIS
JOB NO. JSL0021
CONTRACT ID.
PROJECT NO.
BRIDGE NO. A9494

DESCRIPTION | DATE

MISSOURI HIGHWAYS AND TRANSPORTATION COMMISSION
105 WEST CAPITOL
JEFFERSON CITY, MO 65102
1-888-ASK-MODOT (1-888-275-6636)

HDR Engineering, Inc.
1001 Highlands Plaza Drive
Suite 200
St. Louis, MO 63110
314-425-8300
Certificate of Authority: 000856

Missouri Department of Transportation
Construction and Materials

BORING NO. P-3 (ALT)
Page 3 of 3

Job No.: MG24029 **County:** St. Louis **Route:** Bellefontaine
Design: **Skew:** **Location:** St. Louis County
Bent: **Logged By:** J. Stauffer **Operator:** N. Urban
Station: **Northing:** 1069374.557 **Date of Work:** 12/04/24-12/09/24
Offset: **Easting:** 899795.945 **Depth to Water:**
Elevation: 480.5 **Requested Northing:** **Depth Hole Open:**
Requested Station: **Requested Easting:** **Time Change:**
Requested Offset: **Equipment:** CME 55HTX ,Split-Spoon Sampler, NQ
Requested Elevation: **Location Note:**
Drill No.: UES **Hammer Efficiency:** 80% **Drilling Method:** Hollow Stem Auger

Depth (ft)	Graphic	Description	Elevation (ft)	Sample Type	REC % (RQD %)	Blow Counts (N_{60})	Shear Data	Field Tests	Index Tests
70		70.0-73.3' Grey, SHALE, very soft to soft, moderately weathered, thin bedded, very finely grained	410		100 (82)				
		73.0' - compressive strength = 37 psi							
75		73.3-90.0' Grey and brown, SHALE, soft, moderately to highly weathered, thin to medium bedded, very finely grained 76.0' - 20" Core Loss (76.0-77.67 ft.)	405		42 (14)				
		78.0' - shaly LIMESTONE from 78.0 to 79.0 ft.			83 (73)				
80		79.5' - compressive strength = 744 psi 79.6' - 1.0" limestone seam at 79.5 ft. 81.0' - compressive strength = 785 psi	400		100 (100)				
		82.5' - compressive strength = 378 psi							
85		85.5' - compressive strength = 629 psi	395						
		87.0' - compressive strength = 239 psi 87.1' - shaly LIMESTONE below 87.0 ft.			98 (98)				
90		89.5' - compressive strength = 691 psi Refusal at 58.5 feet. Bottom of borehole at 90.0 feet.							

N_{60} = (Em/60)Nm N_{60} - Corrected N value for standard 60% SPT efficiency; Em - Measured hammer efficiency in percent; Nm - Observed N-value; (1) = Assumed, (2) = Actual

Coordinate System: **Coordinate Zone:** **Coordinate Proj. Factor:**
Coordinate Datum: **Coordinate Units:** U.S. Survey Feet

* Persons using this information are cautioned that the materials shown are determined by the equipment noted and accuracy of the "log of materials" is limited thereby and by judgement of the operator. THIS INFORMATION IS FOR DESIGN PURPOSES ONLY.

LETTER BOREHOLE - MODOT_20151118.GDT - 1/31/25 08:59 - G:\PROJECT FILES\2024\MG24C29 I-270 GAP FROM ROUTE 367 TO LILAC AVENUE\FIELD DATA\BELLEFONTAINE RDII-270_BELLEFONTAINE DECEMBER MODOT LOGS.GPJ

Missouri Department of Transportation
Construction and Materials

BORING NO. A9494-201
Page 1 of 3

Job No.: MG24029 **County:** St. Louis **Route:** Bellefontaine
Design: **Skew:** **Location:** St. Louis County
Bent: **Logged By:** B. Nepal **Operator:** G. Shetley
Station: **Northing:** 1069442.228 **Date of Work:** 06/06/24-06/07/24
Offset: **Easting:** 899916.664 **Depth to Water:** 24.0
Elevation: 480.4 **Requested Northing:** **Depth Hole Open:**
Requested Station: **Requested Easting:** **Time Change:**
Requested Offset: **Equipment:** CME 750Y ,Split-Spoon Sampler, Shelby Tube, NQ
Requested Elevation: **Location Note:**
Drill No.: UES **Hammer Efficiency:** 95% **Drilling Method:** Hollow Stem Auger

Depth (ft)	Graphic	Description	Elevation (ft)	Sample Type	REC % (RQD %)	Blow Counts (N_{60})	Shear Data	Field Tests	Index Tests
0		0.0-0.3' ASPHALT (3") 0.3-1.0' CONCRETE (9") 1.0-2.0' CRUSHED LIMESTONE	480						
		2.0-11.0' Grey, lean CLAY (CL)							
5			475		22	3-2-3 (8)		PP = 0.25 tsf	MC = 20.1%
		8.0' - dark grey below 8 ft.			83		Qu Test Results UCS = 3.64 ksf MC = 25.1% γ_{moist} = 125.6 pcf	PP = 2.25 tsf	MC = 25.1%
10			470						
		11.0-16.0' Light and dark grey, lean CLAY (CL), trace fine gravel			100	2-2-2 (6)		PP = 1.50 tsf	MC = 27.7%
15			465						
		16.0-28.0' Brownish, light and dark grey, lean CLAY (CL), with silt, trace mottled black			100	2-2-2 (6)		PP = 1.25 tsf	MC = 27.4%
20			460						
25		25.0' - grey, trace fine sand below 25 ft.	455					PP = 0.75 tsf	MC = 28.4%
		28.0-57.0' Light bluish grey, fat CLAY (CH)			100	2-2-3 (8)		PP = 1.50 tsf	MC = 24.1%
30									

N_{60} = (Em/60)Nm N_{60} - Corrected N value for standard 60% SPT efficiency; Em - Measured hammer efficiency in percent; Nm - Observed N-value; (1) = Assumed, (2) = Actual

Coordinate System: **Coordinate Zone:** **Coordinate Proj. Factor:**
Coordinate Datum: **Coordinate Units:** U.S. Survey Feet

* Persons using this information are cautioned that the materials shown are determined by the equipment noted and accuracy of the "log of materials" is limited thereby and by judgement of the operator. THIS INFORMATION IS FOR DESIGN PURPOSES ONLY.

LETTER BOREHOLE - MODOT_20151118.GDT - 1/31/25 08:59 - G:\PROJECT FILES\2024\MG24029 I-270 GAP FROM ROUTE 367 TO LILAC AVENUE\FIELD DATA\BELLEFONTAINE RDII-270_BELLEFONTAINE DECEMBER MODOT LOGS.GPJ

(Continued Next Page)

BORING DATA

Note: For location of borings, see Sheet No. 1.

Detailed September 2025
Checked September 2025

Note: This drawing is not to scale. Follow dimensions.

STATE OF MISSOURI
RYAN DAVID SHAW
NUMBER PE-2011000369
PROFESSIONAL ENGINEER
THIS SHEET HAS BEEN SIGNED, SEALED AND DATED ELECTRONICALLY

DATE PREPARED 4/2/2026
ROUTE I-270 | STATE MO
DISTRICT BR | SHEET NO. 48
COUNTY ST. LOUIS
JOB NO. JSL0021
CONTRACT ID.
PROJECT NO.
BRIDGE NO. A9494

DESCRIPTION | DATE

MISSOURI HIGHWAYS AND TRANSPORTATION COMMISSION
105 WEST CAPITOL
JEFFERSON CITY, MO 65102
1-888-ASK-MODOT (1-888-275-6636)

HDR Engineering, Inc.
1001 Highlands Plaza Drive
Suite 200
St. Louis, MO 63110
314-425-8300
Certificate of Authority: 000856

Missouri Department of Transportation
Construction and Materials

BORING NO. A9494-201
Page 2 of 3

Job No.: MG24029 **County:** St. Louis **Route:** Bellefontaine
Design: **Skew:** **Location:** St. Louis County
Bent: **Logged By:** B. Nepal **Operator:** G. Shetley
Station: **Northing:** 1069442.228 **Date of Work:** 06/06/24-06/07/24
Offset: **Easting:** 899916.664 **Depth to Water:** 24.0
Elevation: 480.4 **Requested Northing:** **Depth Hole Open:**
Requested Station: **Requested Easting:** **Time Change:**
Requested Offset: **Equipment:** CME 750Y ,Split-Spoon Sampler, Shelby Tube, NQ
Requested Elevation: **Location Note:**
Drill No.: UES **Hammer Efficiency:** 95% **Drilling Method:** Hollow Stem Auger

Depth (ft)	Graphic	Description	Elevation (ft)	Sample Type	REC % (RQD %)	Blow Counts (N_{60})	Shear Data	Field Tests	Index Tests
30		28.0-57.0' Light bluish grey, fat CLAY (CH) *(continued)*	450						
		32.0' - brownish grey, with fine sand, trace gravel and trace mottled black below 32 ft.							
35			445		100	2-2-3 (8)		PP = 1.50 tsf	MC = 19.0%
		37.0' - grey below 37 ft.							
40			440		100	3-3-4 (11)		PP = 2.50 tsf	MC = 44.5%
		42.0' - trace to with fine sand below 42 ft.							
45			435		100	1-4-5 (14)		PP = 1.50 tsf	MC = 22.3%
50		49.6' - 4.0" clayey fine sand seam at 49.6 ft.	430		67	0-0-0 (0)		PP = 0.50 tsf	MC = 30.1%
		52.0' - fine sand seam at 52 ft.							
		53.5' - shaley below 53.5 ft.							
55			425		72	9-19-30 (78)		PP = 4.50 tsf	MC = 15.3%
		57.0-60.0' Light grey, clayey SHALE							
60					100	30-50/0.4'		PP = 4.50 tsf	MC = 14.4%

N_{60} = (Em/60)Nm N_{60} - Corrected N value for standard 60% SPT efficiency; Em - Measured hammer efficiency in percent; Nm - Observed N-value; (1) = Assumed, (2) = Actual

Coordinate System: **Coordinate Zone:** **Coordinate Proj. Factor:**
Coordinate Datum: **Coordinate Units:** U.S. Survey Feet

* Persons using this information are cautioned that the materials shown are determined by the equipment noted and accuracy of the "log of materials" is limited thereby and by judgement of the operator. THIS INFORMATION IS FOR DESIGN PURPOSES ONLY.

(Continued Next Page)

Missouri Department of Transportation
Construction and Materials

BORING NO. A9494-201
Page 3 of 3

Job No.: MG24029 **County:** St. Louis **Route:** Bellefontaine
Design: **Skew:** **Location:** St. Louis County
Bent: **Logged By:** B. Nepal **Operator:** G. Shetley
Station: **Northing:** 1069442.228 **Date of Work:** 06/06/24-06/07/24
Offset: **Easting:** 899916.664 **Depth to Water:** 24.0
Elevation: 480.4 **Requested Northing:** **Depth Hole Open:**
Requested Station: **Requested Easting:** **Time Change:**
Requested Offset: **Equipment:** CME 750Y ,Split-Spoon Sampler, Shelby Tube, NQ
Requested Elevation: **Location Note:**
Drill No.: UES **Hammer Efficiency:** 95% **Drilling Method:** Hollow Stem Auger

Depth (ft)	Graphic	Description	Elevation (ft)	Sample Type	REC % (RQD %)	Blow Counts (N_{60})	Shear Data	Field Tests	Index Tests
60		60.0-70.0' Light grey, SHALE, moderately weathered, soft, very finely grained, slightly to moderately fractured	420		72 (25)				
65			415		100 (78)				
70					100 (100)				
		Refusal at 59.4 feet. Bottom of borehole at 70.0 feet.							

N_{60} = (Em/60)Nm N_{60} - Corrected N value for standard 60% SPT efficiency; Em - Measured hammer efficiency in percent; Nm - Observed N-value; (1) = Assumed, (2) = Actual

Coordinate System: **Coordinate Zone:** **Coordinate Proj. Factor:**
Coordinate Datum: **Coordinate Units:** U.S. Survey Feet

* Persons using this information are cautioned that the materials shown are determined by the equipment noted and accuracy of the "log of materials" is limited thereby and by judgement of the operator. THIS INFORMATION IS FOR DESIGN PURPOSES ONLY.

STATE OF MISSOURI
RYAN DAVID SHAW
NUMBER PE-2011000369
PROFESSIONAL ENGINEER
THIS SHEET HAS BEEN SIGNED, SEALED AND DATED ELECTRONICALLY

DATE PREPARED 4/2/2026
ROUTE I-270 | STATE MO
DISTRICT BR | SHEET NO. 49
COUNTY ST. LOUIS
JOB NO. JSL0021
CONTRACT ID.
PROJECT NO.
BRIDGE NO. A9494

DESCRIPTION | DATE

MISSOURI HIGHWAYS AND TRANSPORTATION COMMISSION
105 WEST CAPITOL
JEFFERSON CITY, MO 65102
1-888-ASK-MODOT (1-888-275-6636)

HDR Engineering, Inc.
1001 Highlands Plaza Drive
Suite 200
St. Louis, MO 63110
314-425-8300
Certificate of Authority: 000856

BORING DATA

Note: For location of borings, see Sheet No. 1.

Detailed September 2025
Checked September 2025

Note: This drawing is not to scale. Follow dimensions.

LETTER BOREHOLE - MODOT_20151118.GDT - 1/31/25 08:59 - G:\PROJECT FILES\2024\MG24029 I-270 GAP FROM ROUTE 367 TO LILAC AVENUE\FIELD DATA\BELLEFONTAINE RDII-270_BELLEFONTAINE DECEMBER MODOT LOGS.GPJ

c:\pwworking\central01\d4975500\B_A9494_049_SL0021.dgn 12:38:58 PM 4/2/2026

Missouri Department of Transportation
Construction and Materials

BORING NO. P-4 (ALT)
Page 1 of 3

Job No.: MG24029 **County:** St. Louis **Route:** Bellefontaine
Design: **Skew:** **Location:** St. Louis County
Bent: **Logged By:** J. Stauffer **Operator:** J. Frazier
Station: **Northing:** 1069442.228 **Date of Work:** 12/10/24-12/11/24
Offset: **Easting:** 899916.664 **Depth to Water:**
Elevation: 480.4 **Requested Northing:** **Depth Hole Open:**
Requested Station: **Requested Easting:** **Time Change:**
Requested Offset: **Equipment:** CME 55HTX ,NQ
Requested Elevation: **Location Note:**
Drill No.: UES **Hammer Efficiency:** 80% **Drilling Method:** Hollow Stem Auger

Depth (ft)	Graphic	Description	Elevation (ft)	Sample Type	REC % (RQD %)	Blow Counts (N_{60})	Shear Data	Field Tests	Index Tests
0		0.0-0.3' ASPHALT (3")	480						
		0.3-1.1' CONCRETE (10"), with rebar							
		1.1-52.0' Drilled without sampling to 65.0 ft.							
5			475						
10			470						
15			465						
20			460						
25			455						
30			450						
35									

N_{60} = (Em/60)Nm N_{60} - Corrected N value for standard 60% SPT efficiency; Em - Measured hammer efficiency in percent; Nm - Observed N-value; (1) = Assumed, (2) = Actual

Coordinate System: **Coordinate Zone:** **Coordinate Proj. Factor:**
Coordinate Datum: **Coordinate Units:** U.S. Survey Feet

* Persons using this information are cautioned that the materials shown are determined by the equipment noted and accuracy of the "log of materials" is limited thereby and by judgement of the operator. THIS INFORMATION IS FOR DESIGN PURPOSES ONLY.

(Continued Next Page)

LETTER BOREHOLE - MODOT_20151118.GDT - 1/31/25 08:59 - G:\PROJECT FILES\2024\MG24C29 I-270 GAP FROM ROUTE 367 TO LILAC AVENUE\FIELD DATA\BELLEFONTAINE RDU-270_BELLEFONTAINE DECEMBER MODOT LOGS.GPJ

Missouri Department of Transportation
Construction and Materials

BORING NO. P-4 (ALT)
Page 2 of 3

Job No.: MG24029 **County:** St. Louis **Route:** Bellefontaine
Design: **Skew:** **Location:** St. Louis County
Bent: **Logged By:** J. Stauffer **Operator:** J. Frazier
Station: **Northing:** 1069442.228 **Date of Work:** 12/10/24-12/11/24
Offset: **Easting:** 899916.664 **Depth to Water:**
Elevation: 480.4 **Requested Northing:** **Depth Hole Open:**
Requested Station: **Requested Easting:** **Time Change:**
Requested Offset: **Equipment:** CME 55HTX ,NQ
Requested Elevation: **Location Note:**
Drill No.: UES **Hammer Efficiency:** 80% **Drilling Method:** Hollow Stem Auger

Depth (ft)	Graphic	Description	Elevation (ft)	Sample Type	REC % (RQD %)	Blow Counts (N_{60})	Shear Data	Field Tests	Index Tests
35		1.1-52.0' Drilled without sampling to 65.0 ft. *(continued)*	445						
40			440						
45			435						
50			430						
		52.0-65.0' - possible highly weathered shale below 428.4 ft.							
		52.1' - rough drilling observed at 52.0 ft.							
55			425						
60			420						
		62.0' - sand locking and causing tooling issues during drilling below approximately 60.0 ft.							
65		65.0-95.0' Grey and brown, SHALE, very soft to soft, moderately weathered, thin to thick bedded, very finely crystalline	415						
		66.5' - compressive strength = 166 psi				95 (95)			
		68.5' - compressive strength = 201 psi							
70									

N_{60} = (Em/60)Nm N_{60} - Corrected N value for standard 60% SPT efficiency; Em - Measured hammer efficiency in percent; Nm - Observed N-value; (1) = Assumed, (2) = Actual

Coordinate System: **Coordinate Zone:** **Coordinate Proj. Factor:**
Coordinate Datum: **Coordinate Units:** U.S. Survey Feet

* Persons using this information are cautioned that the materials shown are determined by the equipment noted and accuracy of the "log of materials" is limited thereby and by judgement of the operator. THIS INFORMATION IS FOR DESIGN PURPOSES ONLY.

(Continued Next Page)

LETTER BOREHOLE - MODOT_20151118.GDT - 1/31/25 08:59 - G:\PROJECT FILES\2024\MG24029 I-270 GAP FROM ROUTE 367 TO LILAC AVENUE\FIELD DATA\BELLEFONTAINE RDU-270_BELLEFONTAINE DECEMBER MODOT LOGS.GPJ

STATE OF MISSOURI
RYAN DAVID SHAW
NUMBER PE-2011000369
PROFESSIONAL ENGINEER
THIS SHEET HAS BEEN SIGNED, SEALED AND DATED ELECTRONICALLY

DATE PREPARED 4/2/2026
ROUTE I-270 | STATE MO
DISTRICT BR | SHEET NO. 50
COUNTY ST. LOUIS
JOB NO. JSL0021
CONTRACT ID.
PROJECT NO.
BRIDGE NO. A9494

DESCRIPTION | DATE

MISSOURI HIGHWAYS AND TRANSPORTATION COMMISSION
105 WEST CAPITOL
JEFFERSON CITY, MO 65102
1-888-ASK-MODOT (1-888-275-6636)

HDR Engineering, Inc.
1001 Highlands Plaza Drive
Suite 200
St. Louis, MO 63110
314-425-8300
Certificate of Authority: 000856

BORING DATA

Note: For location of borings, see Sheet No. 1.

Detailed September 2025
Checked September 2025

Note: This drawing is not to scale. Follow dimensions.

c:\pwworking\central01\d4975500\B_A9494_050_SL0021.dgn 12:39:29 PM 4/2/2026

Missouri Department of Transportation
Construction and Materials

BORING NO. P-4 (ALT)
Page 3 of 3

Job No.: MG24029 **County:** St. Louis **Route:** Bellefontaine
Design: **Skew:** **Location:** St. Louis County
Bent: **Logged By:** J. Stauffer **Operator:** J. Frazier
Station: **Northing:** 1069442.228 **Date of Work:** 12/10/24-12/11/24
Offset: **Easting:** 899916.664 **Depth to Water:**
Elevation: 480.4 **Requested Northing:** **Depth Hole Open:**
Requested Station: **Requested Easting:** **Time Change:**
Requested Offset: **Equipment:** CME 55HTX ,NQ
Requested Elevation: **Location Note:**
Drill No.: UES **Hammer Efficiency:** 80% **Drilling Method:** Hollow Stem Auger

Depth (ft)	Graphic	Description	Elevation (ft)	Sample Type	REC % (RQD %)	Blow Counts (N_{60})	Shear Data	Field Tests	Index Tests
70		65.0-95.0' Grey and brown, SHALE, very soft to soft, moderately weathered, thin to thick bedded, very finely crystalline *(continued)*	410		100 (85)				
75		74.5' - compressive strength = 147 psi 75.0' - shaly LIMESTONE from 75.0 to 87.0 ft. 76.0' - compressive strength = 803 psi	405		100 (100)				
80		78.0' - compressive strength = 842 psi	400		100 (90)				
85		82.5' - compressive strength = 872 psi 84.5' - compressive strength = 779 psi 85.8' - compressive strength = 956 psi	395		100 (82)				
90		88.0' - compressive strength = 763 psi 90.0' - maroonish below 90.0 ft.	390		100 (68)				
95		94.5' - compressive strength = 461 psi Refusal at 65.0 feet. Bottom of borehole at 95.0 feet.							

N_{60} = (Em/60)Nm N_{60} - Corrected N value for standard 60% SPT efficiency; Em - Measured hammer efficiency in percent; Nm - Observed N-value; (1) = Assumed, (2) = Actual

Coordinate System: **Coordinate Zone:** **Coordinate Proj. Factor:**
Coordinate Datum: **Coordinate Units:** U.S. Survey Feet

* Persons using this information are cautioned that the materials shown are determined by the equipment noted and accuracy of the "log of materials" is limited thereby and by judgement of the operator. THIS INFORMATION IS FOR DESIGN PURPOSES ONLY.

LETTER BOREHOLE - MODOT_20151118.GDT - 1/31/25 08:59 - G:\PROJECT FILES\2024\MG24C29 I-270 GAP FROM ROUTE 367 TO LILAC AVENUE\FIELD DATA\BELLEFONTAINE RDII-270_BELLEFONTAINE DECEMBER MODOT LOGS.GPJ

Missouri Department of Transportation
Construction and Materials

BORING NO. AB-4
Page 1 of 3

Job No.: MG24029 **County:** St. Louis **Route:** Bellefontaine
Design: **Skew:** **Location:** St. Louis County
Bent: **Logged By:** B. Nepal **Operator:** N. Urban
Station: **Northing:** 1069315.048 **Date of Work:** 12/16/24-12/17/24
Offset: **Easting:** 899953.613 **Depth to Water:** 38.5
Elevation: 496.7 **Requested Northing:** **Depth Hole Open:**
Requested Station: **Requested Easting:** **Time Change:**
Requested Offset: **Equipment:** CME 55HTX ,Split-Spoon Sampler, Shelby Tube, NQ
Requested Elevation: **Location Note:**
Drill No.: UES **Hammer Efficiency:** 80% **Drilling Method:** Hollow Stem Auger

Depth (ft)	Graphic	Description	Elevation (ft)	Sample Type	REC % (RQD %)	Blow Counts (N_{60})	Shear Data	Field Tests	Index Tests
0		0.0-0.3' ASPHALT (3") 0.3-0.8' CONCRETE (6")	495						
5		0.8-21.5' FILL: Grey, lean CLAY (CL), with crushed limestone	490		28	3-3-3 (8)		PP = 1.50 tsf	MC = 19.4%
10		8.0' - brown below 8.0 ft.	485		96		Qu Test Results UCS = 3.92 ksf MC = 22.1% γ_{moist} = 128.42 pcf	PP = 1.50 tsf	MC = 22.1%
15			480		89	3-5-5 (13)		PP >4.50 tsf	MC = 17.5%
20		18.5' - reddish brown, trace gravel below 18.5 ft.	475		83	2-7-13 (27)		PP = 3.00 tsf	MC = 16.5%
25		21.5-26.8' Light grey, SILT (ML) 23.0' - CU test performed at 23.0 ft.: average shear strength = 2.40 tsf dry density = 102.2 pcf	470		96			PP = 1.25 tsf	MC = 15.6%
30		26.8-38.0' Dark grey, lean CLAY (CL) 29.0' - fuel odor observed at 29.0 ft.			100	2-3-3 (8)		PP = 1.75 tsf	MC = 26.3%

N_{60} = (Em/60)Nm N_{60} - Corrected N value for standard 60% SPT efficiency; Em - Measured hammer efficiency in percent; Nm - Observed N-value; (1) = Assumed, (2) = Actual

Coordinate System: **Coordinate Zone:** **Coordinate Proj. Factor:**
Coordinate Datum: **Coordinate Units:** U.S. Survey Feet

* Persons using this information are cautioned that the materials shown are determined by the equipment noted and accuracy of the "log of materials" is limited thereby and by judgement of the operator. THIS INFORMATION IS FOR DESIGN PURPOSES ONLY.

(Continued Next Page)

LETTER BOREHOLE - MODOT_20151118.GDT - 1/31/25 08:59 - G:\PROJECT FILES\2024\MG24029 I-270 GAP FROM ROUTE 367 TO LILAC AVENUE\FIELD DATA\BELLEFONTAINE RDII-270_BELLEFONTAINE DECEMBER MODOT LOGS.GPJ

STATE OF MISSOURI
RYAN DAVID SHAW
NUMBER PE-2011000369
PROFESSIONAL ENGINEER
THIS SHEET HAS BEEN SIGNED, SEALED AND DATED ELECTRONICALLY

DATE PREPARED 4/2/2026
ROUTE I-270 | STATE MO
DISTRICT BR | SHEET NO. 51
COUNTY ST. LOUIS
JOB NO. JSL0021
CONTRACT ID.
PROJECT NO.
BRIDGE NO. A9494

DESCRIPTION | DATE

MISSOURI HIGHWAYS AND TRANSPORTATION COMMISSION
105 WEST CAPITOL
JEFFERSON CITY, MO 65102
1-888-ASK-MODOT (1-888-275-6636)

HDR Engineering, Inc.
1001 Highlands Plaza Drive
Suite 200
St. Louis, MO 63110
314-425-8300
Certificate of Authority: 000856

BORING DATA

Note: For location of borings, see Sheet No. 1.

Detailed September 2025
Checked September 2025

Note: This drawing is not to scale. Follow dimensions.

c:\pwworking\central01\d4975500\B_A9494_051_SL0021.dgn 12:40:05 PM 4/2/2026

Missouri Department of Transportation
Construction and Materials

BORING NO. AB-4
Page 2 of 3

Job No.: MG24029 **County:** St. Louis **Route:** Bellefontaine
Design: **Skew:** **Location:** St. Louis County
Bent: **Logged By:** B. Nepal **Operator:** N. Urban
Station: **Northing:** 1069315.048 **Date of Work:** 12/16/24-12/17/24
Offset: **Easting:** 899953.613 **Depth to Water:** 38.5
Elevation: 496.7 **Requested Northing:** **Depth Hole Open:**
Requested Station: **Requested Easting:** **Time Change:**
Requested Offset: **Equipment:** CME 55HTX ,Split-Spoon Sampler, Shelby Tube, NQ
Requested Elevation: **Location Note:**
Drill No.: UES **Hammer Efficiency:** 80% **Drilling Method:** Hollow Stem Auger

Depth (ft)	Graphic	Description	Elevation (ft)	Sample Type	REC % (RQD %)	Blow Counts (N_{60})	Shear Data	Field Tests	Index Tests
30		26.8-38.0' Dark grey, lean CLAY (CL) *(continued)*	465						
35				X	100	3-3-3 (8)		PP = 2.00 tsf	MC = 27.3%
			460						
40		▽ 38.0-47.0' Light grey and brown, lean CLAY (CL), trace fine sand		X	100	0-1-1 (3)		PP = 0.25 tsf	MC = 29.9%
			455						
45				X	100	1-3-2 (7)		PP = 1.25 tsf	MC = 23.8%
		47.0-61.8' Dark grey, fat CLAY (CH)	450						
50				X	100	2-2-2 (5)		PP = 1.00 tsf	MC = 30.1%
		51.8' - dark brown, with grey shale fragments	445						
55				X	100	3-5-5 (13)		PP = 2.00 tsf	MC = 20.6%
			440						
60				X	100	8-9-11 (27)		PP = 2.75 tsf	MC = 18.7%

N_{60} = (Em/60)Nm N_{60} - Corrected N value for standard 60% SPT efficiency; Em - Measured hammer efficiency in percent; Nm - Observed N-value; (1) = Assumed, (2) = Actual

Coordinate System: **Coordinate Zone:** **Coordinate Proj. Factor:**
Coordinate Datum: **Coordinate Units:** U.S. Survey Feet

* Persons using this information are cautioned that the materials shown are determined by the equipment noted and accuracy of the "log of materials" is limited thereby and by judgement of the operator. THIS INFORMATION IS FOR DESIGN PURPOSES ONLY.

(Continued Next Page)

Missouri Department of Transportation
Construction and Materials

BORING NO. AB-4
Page 3 of 3

Job No.: MG24029 **County:** St. Louis **Route:** Bellefontaine
Design: **Skew:** **Location:** St. Louis County
Bent: **Logged By:** B. Nepal **Operator:** N. Urban
Station: **Northing:** 1069315.048 **Date of Work:** 12/16/24-12/17/24
Offset: **Easting:** 899953.613 **Depth to Water:** 38.5
Elevation: 496.7 **Requested Northing:** **Depth Hole Open:**
Requested Station: **Requested Easting:** **Time Change:**
Requested Offset: **Equipment:** CME 55HTX ,Split-Spoon Sampler, Shelby Tube, NQ
Requested Elevation: **Location Note:**
Drill No.: UES **Hammer Efficiency:** 80% **Drilling Method:** Hollow Stem Auger

Depth (ft)	Graphic	Description	Elevation (ft)	Sample Type	REC % (RQD %)	Blow Counts (N_{60})	Shear Data	Field Tests	Index Tests
60		47.0-61.8' Dark grey, fat CLAY (CH) *(continued)*	435						
		61.8-64.0' Grey and brown, clayey SHALE		X	100	21-41-50/0.3'		PP >4.50 tsf	MC = 19.1%
65		64.0-67.8' Grey, SHALE, very soft to soft, moderately weathered, thin to medium bedded, very finely grained	430		67 (22)				
		67.8-69.0' Dark grey, COAL, moderately weathered, hard			99 (77)				
70		69.0-74.0' Grey, SHALE, very soft to soft, moderately weathered, thin to medium bedded, very finely grained	425		100 (81)				
		Refusal at 64.0 feet. Bottom of borehole at 74.0 feet.							

N_{60} = (Em/60)Nm N_{60} - Corrected N value for standard 60% SPT efficiency; Em - Measured hammer efficiency in percent; Nm - Observed N-value; (1) = Assumed, (2) = Actual

Coordinate System: **Coordinate Zone:** **Coordinate Proj. Factor:**
Coordinate Datum: **Coordinate Units:** U.S. Survey Feet

* Persons using this information are cautioned that the materials shown are determined by the equipment noted and accuracy of the "log of materials" is limited thereby and by judgement of the operator. THIS INFORMATION IS FOR DESIGN PURPOSES ONLY.

STATE OF MISSOURI
RYAN DAVID SHAW
NUMBER PE-2011000369
PROFESSIONAL ENGINEER
THIS SHEET HAS BEEN SIGNED, SEALED AND DATED ELECTRONICALLY

DATE PREPARED 4/2/2026
ROUTE I-270 | STATE MO
DISTRICT BR | SHEET NO. 52
COUNTY ST. LOUIS
JOB NO. JSL0021
CONTRACT ID.
PROJECT NO.
BRIDGE NO. A9494

DESCRIPTION | DATE

MISSOURI HIGHWAYS AND TRANSPORTATION COMMISSION
105 WEST CAPITOL
JEFFERSON CITY, MO 65102
1-888-ASK-MODOT (1-888-275-6636)

HDR Engineering, Inc.
1001 Highlands Plaza Drive
Suite 200
St. Louis, MO 63110
314-425-8300
Certificate of Authority: 000856

BORING DATA

Note: For location of borings, see Sheet No. 1.

Detailed September 2025
Checked September 2025

Note: This drawing is not to scale. Follow dimensions.

c:\pwworking\central01\d4975500\B_A9494_052_SL0021.dgn 12:40:38 PM 4/2/2026

LETTER BOREHOLE - MODOT_20151118.GDT - 1/31/25 08:59 - G:\PROJECT FILES\2024\MG24029 I-270 GAP FROM ROUTE 367 TO LILAC AVENUE\FIELD DATA\BELLEFONTAINE RDII-270_BELLEFONTAINE DECEMBER MODOT LOGS.GPJ