DESIGN DESIGNATION

A.A.D.T. - 2026 = 175
A.A.D.T. - 2036 = 194
D.H.V. = 10.65%
T = 10.65%
V = 55 M.P.H.

FUNCTIONAL CLASSIFICATION-MAJOR COLLECTOR

TEMPORARY CONSTRUCTION EASEMENTS REQUIRED

RIGHT OF WAY LIMITS FOR THIS PROJECT EXTEND FROM STA. 564+56.00 TO STA. 565+56.00 A DISTANCE OF 0.019 MILES.

CONVENTIONAL SYMBOLS
(USED IN PLANS)

	EXISTING	NEW
BUILDINGS AND STRUCTURES		
GUARD RAIL		
GUARD CABLE		
CONCRETE RIGHT-OF-WAY MARKER		
STEEL RIGHT-OF-WAY MARKER		
LOCATION SURVEY MARKER		
UTILITIES		
FIBER OPTICS	-FO-	-FO-
OVERHEAD CABLE TV	-OTV-	-OTV-
UNDERGROUND CABLE TV	-UTV-	-UTV-
OVERHEAD TELEPHONE	-OT-	-OT-
UNDERGROUND TELEPHONE	-UT-	-UT-
OVERHEAD POWER	-OE-	-OE-
UNDERGROUND POWER	-UE-	-UE-
SANITARY SEWER	-S-	-S-
STORM SEWER	-SS-	-SS-
GAS	-G-	-G-
WATER	-W-	-W-
MANHOLE	SAN	
FIRE HYDRANT	HYD	
WATER VALVE	WV	
WATER METER	WM	
DROP INLET	D	
DITCH BLOCK		
GROUND MOUNTED SIGN	SIGN	
LIGHT POLE		
H-FRAME POWER POLE		
TELEPHONE PEDESTAL	PED	
FENCE		
CHAIN LINK	-V-	
WOVEN WIRE	-X-	
GATE POST		
BENCHMARK	BM	

NOTE: DASHED OR OPEN SYMBOLS INDICATE EXISTING FEATURES

MISSOURI HIGHWAYS AND TRANSPORTATION COMMISSION

PLANS FOR PROPOSED STATE HIGHWAY

KNOX COUNTY

T63N R10W



KEY MAP
LOCATION OF KNOX COUNTY

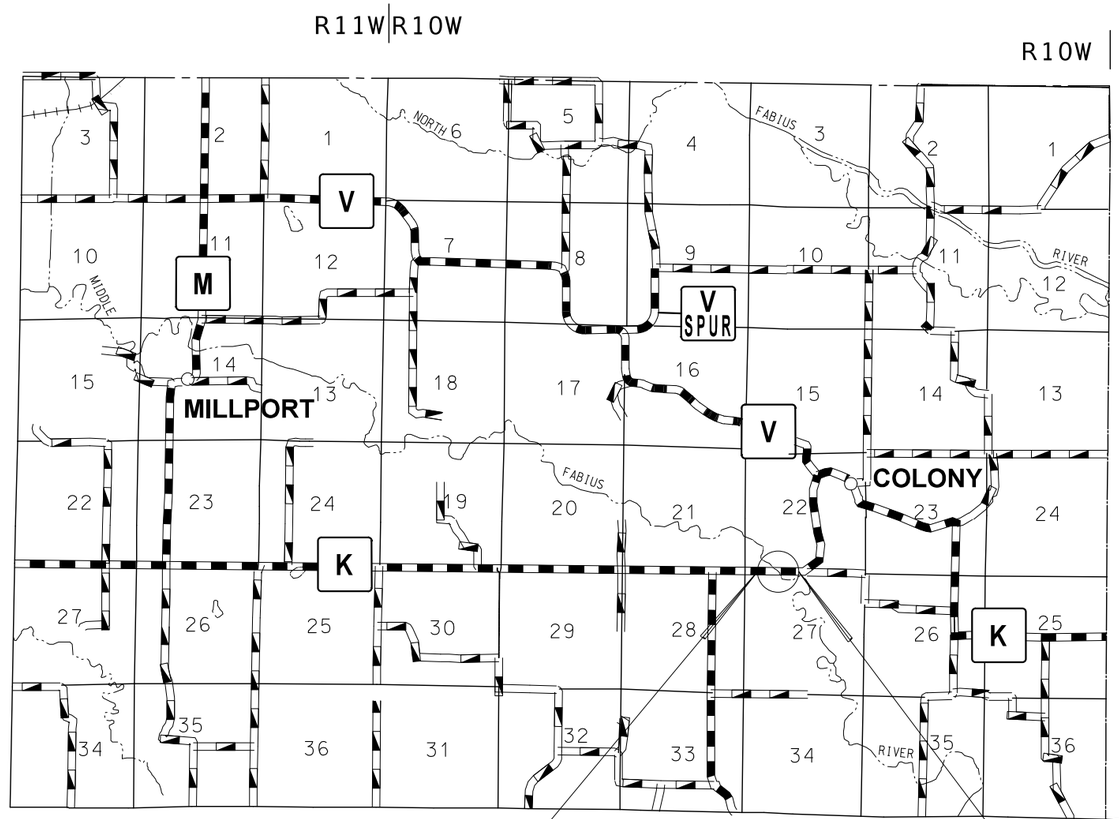

PROJECT LOCATION

GRADING, PAVEMENT, DRAINAGE, AND REPLACEMENT OF BRIDGE X0617 OVER MIDDLE FABIUS RIVER

½ 0 1 2
SCALE IN MILES

THE EXISTENCE AND APPROXIMATE LOCATION OF UTILITY FACILITIES KNOWN TO EXIST, AS SHOWN ON THE PLANS, ARE BASED ON THE BEST INFORMATION AVAILABLE TO THE COMMISSION AT THIS TIME. THIS INFORMATION IS PROVIDED BY THE COMMISSION "AS-IS" AND THE COMMISSION EXPRESSLY DISCLAIMS ANY REPRESENTATION OR WARRANTY AS TO THE COMPLETENESS, ACCURACY, OR SUITABILITY OF THE INFORMATION FOR ANY USE. RELIANCE UPON THIS INFORMATION IS DONE AT THE RISK AND PERIL OF THE USER, AND THE COMMISSION SHALL NOT BE LIABLE FOR ANY DAMAGES THAT MAY ARISE FROM ANY ERROR IN THE INFORMATION. IT IS, THEREFORE, THE RESPONSIBILITY OF THE CONTRACTOR TO VERIFY THE EXISTENCE, LOCATION AND STATUS OF ANY FACILITY. SUCH VERIFICATION INCLUDES DIRECT CONTACT WITH THE LISTED UTILITIES.

INDEX OF SHEETS

DESCRIPTION	SHEET NUMBER
TITLE SHEET	1
TYPICAL SECTIONS (TS) (1 SHEET)	2
QUANTITIES (QU) (3 SHEETS)	3
PLAN-PROFILE (PP)	4-5
REFERENCE POINTS (RP)	6
COORDINATE POINTS (CP)	7
SPECIAL SHEETS (SS)	8
TRAFFIC CONTROL SHEETS (TC)	9-11
EROSION CONTROL SHEETS (EC)	12
SIGNING/PAVEMENT MARKING (SN)	13
CULVERT SECTIONS (CS)	14
BRIDGE DRAWINGS (B)	
A9721	1-33
CROSS SECTIONS (XS)	1-10

LENGTH OF PROJECT

BEGINNING OF PROJECT	STA.	560+68.00
END OF PROJECT	STA.	573+60.00
APPARENT LENGTH		1292.00 FEET
EQUATIONS AND EXCEPTIONS:		
TOTAL CORRECTIONS		0 FEET
NET LENGTH OF PROJECT		1292.00 FEET
STATE LENGTH		0.245 MILES
FOR INFORMATION ONLY ESTIMATED DISTURBED ACRES		0.80 ACRES

STATE OF MISSOURI
ZACHARY S. WALKER
NUMBER PE-2010000877
PROFESSIONAL ENGINEER
10/07/2026 9:11:40 AM
ZACHARY S. WALKER - CIVIL
MO-PE-2010000877

DATE PREPARED
10/7/2026

ROUTE	STATE
K	MO
DISTRICT	SHEET NO.
NE	1

COUNTY
KNOX

JOB NO.
JNE0156

CONTRACT ID.

PROJECT NO.

BRIDGE NO.

DESCRIPTION

DATE

MISSOURI HIGHWAYS AND TRANSPORTATION COMMISSION
105 WEST CAPITOL
JEFFERSON CITY, MO 65102
1-888-ASK-MODOT (1-888-275-6636)

TITLE SHEET

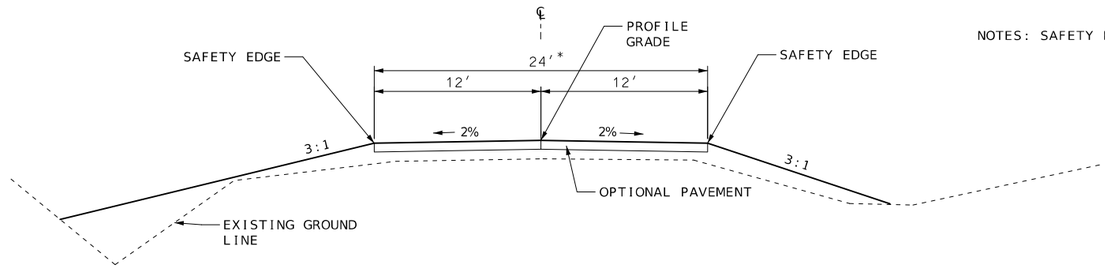

NOTES: SAFETY EDGE INSTALLED PER STANDARD PLANS 401.00

TYPICAL SECTION
RTE. K

STA. 560+68.00 TO STA. 565+99.75

* PAVEMENT TAPERS FROM EXISTING WIDTH (21.14') TO 24'WIDE AT STATION 560+68.00 TO STATION 564+18.00 (SEE CROSS SECTIONS)



EXISTING BRIDGE X0617

STA. 566+86.25 TO STA. 568+63.86

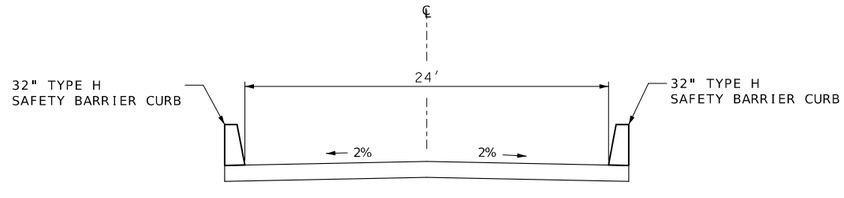

PROPOSED BRIDGE A9721

STA. 566+19.75 TO STA. 568+72.25

(BRIDGE APPROACH SLABS (MINOR)
STA. 565+99.75 TO STA. 566+19.75
STA. 568+72.25 TO STA. 568+92.25)

OPTIONAL PAVEMENT

1.75" BP-1 PG64-22
8.25" BIT. BASE PG64-22
OR
8"PCCP

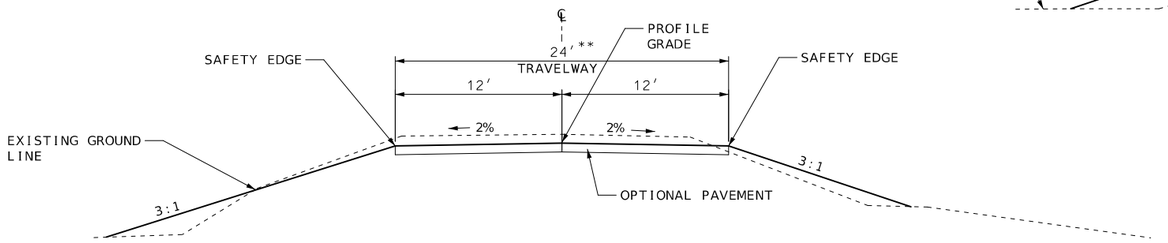

TYPICAL SECTION
RTE. K

STA. 568+92.25 TO STA. 573+60.00

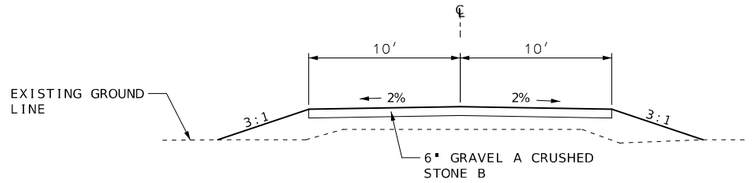

ENTRANCE

STA. 565+10.00

** PAVEMENT TAPERS FROM 24'WIDE TO EXISTING PAVEMENT WIDTH (20.94') STATION 570+30.00 TO STATION 573+60.00 (SEE CROSS SECTIONS)

STATE OF MISSOURI
ZACHARY S. WALKER
NUMBER PE-2010000877
PROFESSIONAL ENGINEER
09/28/2026 12:37:01 PM
ZACHARY S. WALKER - CIVIL
MO-PE-2010000877

DATE PREPARED
9/16/2026

ROUTE	STATE
K	MO
DISTRICT	SHEET NO.
NE	2

COUNTY
KNOX

JOB NO.
JNE0156

CONTRACT ID.

PROJECT NO.

BRIDGE NO.

DESCRIPTION	DATE

MISSOURI HIGHWAYS AND TRANSPORTATION COMMISSION

105 WEST CAPITOL
JEFFERSON CITY, MO 65102
1-888-ASK-MODOT (1-888-275-6636)

TYPICAL SECTIONS
SHEET 1 OF 1
NOT TO SCALE

REMOVAL OF IMPROVEMENTS

SHEET #	LOC.	OFFSET FT.	STA.	STA.	TOTAL	REMARKS
4	CL RTE K	15' RT	558+40.00	-	1 SIGN	LOAD POSTING SIGN
4	CL RTE K	11' LT/RT	566+86.25	-	6 SIGNS	OBJECT MARKERS AT BRIDGE END
4	CL RTE K	11' LT/RT	568+63.86	-	6 SIGNS	OBJECT MARKERS AT BRIDGE END
4	CL RTE K	10.5' LT-10' RT	560+68.00	-	21 LF	SAW CUT
4	CL RTE K	0-10' LT/RT	560+68.00	566+19.25	1287 SY	PAVEMENT REMOVAL
4,5	CL RTE K	0-10' LT/RT	568+72.75	573+60.00	1137 SY	PAVEMENT REMOVAL
5	CL RTE K	10' LT-10' RT	573+60.00	-	21 LF	SAW CUT
4	CL RTE K	38' RT	565+00.00	-	40 LF	ENTRANCE PIPE
5	CL RTE K	15' LT	578+25.00	-	1 SIGN	LOAD POSTING SIGN
				TOTAL	1	LUMP SUM

CLEARING AND GRUBBING

ITEM	QUANTITY (AC)
CLEARING AND GRUBBING	1
TOTAL	1 AC

SUBGRADE COMPACTION (6 INCH DEPTH)

SHEET	BEGIN STATION	END STATION	ROUTE	LENGTH 100 FT.	REMARKS
4	560+68.00	566+19.25	K	5.5	
4	568+72.75	573+60.00	K	4.9	
			TOTAL	10.4	
			USE	11.0	

EARTHWORK

SHEET	BEGIN STATION	END STATION	ROUTE	CL. A EXC. (CY)	COMP. EMB. (CY)	REMARKS
4	560+68.00	566+19.25	K	168	1017	
4	566+19.25	567+36.00	K	1350		SPILL SLOPE
4	567+57.00	568+72.25	K	99		SPILL SLOPE
4,5	568+72.75	573+60.00	K	674	130	
4	563+25.00		K	7	0	DITCH CLEANOUT
4	0+30.00		ENTRANCE	8		DITCH CLEANOUT
4	565+10.00		K		170	ENTRANCE
			TOTAL	2306	1317	

NOTE: COMPACTION FACTOR OF 1.13 USED FOR COMPACTING EMBANKMENT
ESTIMATED EXCESS MATERIAL = 818 CY

MOBILIZATION

ITEM	QUANTITY (LS)
MOBILIZATION	1
TOTAL	1 LUMP SUM

MISC. SEEDING AND MULCHING

SHEET	STA.	STA.	LOCATION	QUANTITY APPROX. ACRES	REMARKS
4	560+68.00	566+19.25	LT	0.22	
4	560+68.00	566+19.25	RT	0.34	
4,5	568+72.75	573+60.00	LT	0.13	
4,5	568+72.75	573+60.00	RT	0.11	
			TOTAL	0.80	
			USE	1	LUMP SUM

NOTE: ACREAGE INCLUDES AREA 5' OUTSIDE OF SLOPE LINE

OPTIONAL PAVEMENT

SHEET	BEGIN STATION	END STATION	ROUTE	WIDTH (FT)	OPTIONAL PVMT (SY)	4" TYPE 1 AGG BASE (SY)	REMARKS
4	560+68.00	564+18.00	K	VARIES	877.8	878	TAPER FROM EXISTING EOP
4	564+18.00	565+99.75	K	24.00	484.7	485	
4	568+92.25	570+30.00	K	24.00	367.3	367	
4	570+30.00	573+60.00	K	VARIES	823.9	824	TAPER TO EXISTING EOP
			TOTAL		2554	2554	

CONTRACTOR FURNISHED SURVEYING AND STAKING

ITEM	QUANTITY (LS)
CONTRACTOR FURNISHED SURVEYING AND STAKING	1
TOTAL	1 LUMP SUM

ENTRANCES

SHEET #	LOC.	STA.	6" GRAVEL A CRUSHED STONE B 0.039 TON/SY/INCH (TONS)
4,8	CL RTE K	565+10.00	57
		TOTAL	57

TYPE 2 ROCK BLANKET

SHEET	STATION	STATION	FURNISHING TYPE 2 ROCK BLANKET (CY)	PLACING TYPE 2 ROCK BLANKET (CY)	PERM. EROSION CNTRL. GEOTEXTILE (SY)	REMARKS
4	564+88.00	566+34.00	467.99	467.99	500.00	
4	568+56.00	569+02.00	159.67	159.67	239.50	
		TOTAL	627.7	627.7	739.5	
		USE	628.0	628.0	740.0	

4" CLASS 1 PAVEMENT MARKING PAINT

SHEET	STATION	STATION	4" WHITE	4" YELLOW L.F.	REMARKS
13	560+68.00	566+20.00		690	SOLID/INTERMITTENT CENTERLINE
13	566+20.00	573+60.00		1480	DOUBLE SOLID YELLOW CENTERLINE
13	560+68.00	573+60.00	2584		EDGELINES
		TOTAL	2584	2170	

GROUP C PIPE CULVERT

SHEET #	LOC.	STA.	36" PIPE (FT)	EQUIV. SMOOTH PIPE	CLASS 3 EXC. (CY)	36" FLARED END SECTION (EACH)	ROCK LINING (CY)	REMARKS
4,14	CL RTE K	563+25.00	36	(36")	32.0	2	9	
4	CL RTE K	563+10.00	44	(36")	47.0	2	9	
		TOTAL	80		79	4	18	

TEMPORARY EROSION CONTROL

SHEET	* SEDIMENT REMOVAL (CY)	SILT FENCE (LF)	ROCK DITCH CHECK (LF)	TYPE C BERM (LF)	REMARKS
12	32	1971	136	305	
TOTAL	32	1971	136	305	

* ESTIMATED AT 1 CY PER DITCH CHECK AND 1 CY PER 100' OF SILT FENCE

STATE OF MISSOURI
ZACHARY S. WALKER
NUMBER PE-2010000977
PROFESSIONAL ENGINEER
03/28/2026 2:05:46 PM
ZACHARY S. WALKER - CIVIL
MO-PE-2010000977

DATE PREPARED
9/17/2026

ROUTE	STATE
K	MO
DISTRICT	SHEET NO.
NE	3

COUNTY
KNOX

JOB NO.
JNE0156

CONTRACT ID.

PROJECT NO.

BRIDGE NO.

DESCRIPTION	DATE

MISSOURI HIGHWAYS AND TRANSPORTATION COMMISSION
105 WEST CAPITOL
JEFFERSON CITY, MO 65102
1-888-ASK-MODOT (1-888-275-6636)

QUANTITY SHEET
SHEET 1 OF 3

SIGNS						PERFORATED SQUARE STEEL TUBE						
						2 IN. POST						
									ANCHORS		BREAKAWAY ASSEMBLY	REMARKS AND OTHER REQUIRED ITEMS
SIGN NO.	SIGN SIZE	STATION	HORZ CLEAR IF NOT STD	LOCATION	SIGN DTL. SHT. NO.	POST NO.1	POST NO.2	TOTAL ITEM NO. 9031270A	DRIVEN 7-GA. ITEM NO. 9031273A	CONCRETE 7-GA. ITEM NO. 9031274	ITEM NO. 9031241	
						LF	LF	LF	EA	EA	EA	
1	12"x36"	566+19		NW CORNER		16.00		16.00	1.00			
	12"x36"	566+19		NW CORNER		16.00		16.00	1.00			
	12"x36"	566+19		NW CORNER		16.00		16.00	1.00			
2	12"x36"	566+19		NE CORNER		16.00		16.00	1.00			
	12"x36"	566+19		NE CORNER		16.00		16.00	1.00			
	12"x36"	566+19		NE CORNER		16.00		16.00	1.00			
3	12"x36"	568+73		SW CORNER		16.00		16.00	1.00			
	12"x36"	568+73		SW CORNER		16.00		16.00	1.00			
	12"x36"	568+73		SW CORNER		16.00		16.00	1.00			
4	12"x36"	568+73		SE CORNER		16.00		16.00	1.00			
	12"x36"	568+73		SE CORNER		16.00		16.00	1.00			
	12"x36"	568+73		SE CORNER		16.00		16.00	1.00			
				SUBTOTAL				192.00	12.00	0.00	0.00	
				TOTAL				192.00	12.00	0.0	0.0	

STANDARD SIGN ASSEMBLIES																	SIGN SUMMARY						
			TYPE																SIZE, TYPE & SQUARE FEET				
SIGN NUMBER	STATION	LOCATION	OM3-R	OM3-L													STANDARD SIGN OR SPECIAL SIGN NUMBER	SIGN DETAIL SHEET NO.	NO. EACH	SIZE	FLAT SHEET SH ITEM NO. 9035004A	FLAT SHEET FLUORESCENT SHF * ITEM NO. 9035069A	STRUCTURAL ST ITEM NO. 9035011A	STRUCTURAL FLUORESCENT STF * ITEM NO. 9035071A
			SIGN DESCRIPTION, SIZES & NUMBER OF EACH																				
1	566+19	NW CORNER	3														TYPE III OBJECT MARKER (RIGHT)	STD.	3	12"x36"		9.0		
2	566+19	NE CORNER		3													TYPE III OBJECT MARKER (LEFT)	STD.	3	12"x36"		9.0		
3	568+73	SW CORNER	3														TYPE III OBJECT MARKER (LEFT)	STD.	3	12"x36"		9.0		
4	568+73	SE CORNER		3													TYPE III OBJECT MARKER (RIGHT)	STD.	3	12"x36"		9.0		
		TOTAL	6	6																TOTAL		36		

* ORANGE, YELLOW & YELLOW/GREEN

SIGN REMOVAL AND RELOCATION						
SHEET	ROADWAY	STA.	LOC.	DESCRIPTION	UNIT	AMOUNT
4	RTE K	561+12	LT	WATER GAUGE SIGN	EACH	1
					TOTAL	1

STATE OF MISSOURI
ZACHARY S. WALKER
NUMBER PE-2010000877
PROFESSIONAL ENGINEER
09/28/2026 2:07:05 PM
ZACHARY S. WALKER - CIVIL
MO-PE-2010000877

DATE PREPARED
9/16/2026

ROUTE	STATE
K	MO
DISTRICT	SHEET NO.
NE	3

COUNTY
KNOX

JOB NO.
JNE0156

CONTRACT ID.

PROJECT NO.

BRIDGE NO.

DESCRIPTION	DATE

MISSOURI HIGHWAYS AND TRANSPORTATION COMMISSION
105 WEST CAPITOL
JEFFERSON CITY, MO 65102
1-888-ASK-MODOT (1-888-275-6636)

QUANTITY SHEET
SHEET 2 OF 3

SIGN	SIZE IN.	AREA SQ.FT.	QTY EACH	TOTAL AREA SQ.FT.	QTY RELOC EACH	TOTAL RELOC SQ.FT.	SIGN NO.	DESCRIPTION
WARNING SIGNS								
WO1-1L	48X48	16.00						TURN (SYMBOL LEFT)
WO1-1R	48X48	16.00						TURN (SYMBOL RIGHT)
WO1-2L	48X48	16.00						CURVE (SYMBOL LEFT)
WO1-2R	48X48	16.00						CURVE (SYMBOL RIGHT)
WO1-3L	48X48	16.00						REVERSE TURN (SYMBOL LEFT)
WO1-3R	48X48	16.00						REVERSE TURN (SYMBOL RIGHT)
WO1-4L	48X48	16.00						REVERSE CURVE (SYMBOL LEFT)
WO1-4R	48X48	16.00						REVERSE CURVE (SYMBOL RIGHT)
WO1-4bL	48X48	16.00						DOUBLE ARROW REVERSE CURVE (SYMBOL LEFT)
WO1-4bR	48X48	16.00						DOUBLE ARROW REVERSE CURVE (SYMBOL RIGHT)
WO1-4cL	48X48	16.00						TRIPLE ARROW REVERSE CURVE (SYMBOL LEFT)
WO1-4cR	48X48	16.00						TRIPLE ARROW REVERSE CURVE (SYMBOL RIGHT)
WO1-6	60X30	12.50						HORIZONTAL ARROW (SYMBOL)
WO1-6a	72X36	18.00						HORIZ. ARROW (SYMBOL ON PERMANENT BARRICADE)
WO1-7	60X30	12.50						DOUBLE HEAD HORIZONTAL ARROW (SYMBOL)
WO1-7a	72X36	18.00						DOUBLE HEAD HORIZ. ARROW (SYMBOL ON PERM. BARR.)
WO1-8	18X24	3.00						CHEVRON (SYMBOL)
WO1-8a	30X36	7.50						CHEVRON (SYMBOL FOR DIVIDED HIGHWAYS)
WO3-1	48X48	16.00						STOP AHEAD (SYMBOL)
WO3-2	48X48	16.00						YIELD AHEAD (SYMBOL)
WO3-3	48X48	16.00						SIGNAL AHEAD (SYMBOL)
WO3-4	48X48	16.00						BE PREPARED TO STOP
WO3-5	48X48	16.00						SPEED LIMIT AHEAD
WO4-1L	48X48	16.00						MERGE (SYMBOL FROM LEFT)
WO4-1R	48X48	16.00						MERGE (SYMBOL FROM RIGHT)
WO4-1aL	48X48	16.00						MERGE (LEFT)
WO4-1aR	48X48	16.00						MERGE (RIGHT)
WO5-1	48X48	16.00						ROAD/BRIDGE/RAMP NARROWS
WO5-3	48X48	16.00						ONE LANE BRIDGE
WO5-5	48X48	16.00						NARROW LANES
WO6-1	48X48	16.00						DIVIDED HIGHWAY (SYMBOL)
WO6-2	48X48	16.00						DIVIDED HIGHWAY END (SYMBOL)
WO6-3	48X48	16.00						TWO WAY TRAFFIC (SYMBOL)
WO7-3a	30X24	5.00						NEXT XX MILES (PLAQUE)
WO8-1	48X48	16.00						BUMP
WO8-2	48X48	16.00						DIP
WO8-3	48X48	16.00						PAVEMENT ENDS
WO8-4	48X48	16.00						SOFT SHOULDER
WO8-5	48X48	16.00						SLIPPERY WHEN WET (SYMBOL)
WO8-6	48X48	16.00						TRUCK CROSSING
WO8-6c	48X48	16.00						TRUCK ENTRANCE
WO8-7	36X36	9.00						LOOSE GRAVEL
WO8-7a	36X36	9.00						FRESH OIL / LOOSE GRAVEL
WO8-9	48X48	16.00						LOW SHOULDER
WO8-11	48X48	16.00						UNEVEN LANES
WO8-12	48X48	16.00						NO CENTER LINE
WO8-15	48X48	16.00						GROOVED PAVEMENT
WO8-15P	30X24	5.00						MOTORCYCLE (PLAQUE)
WO8-17L	48X48	16.00						SHOULDER DROP-OFF (SYMBOL LEFT)
WO8-17R	48X48	16.00						SHOULDER DROP-OFF (SYMBOL RIGHT)
WO8-17P	30X24	5.00						SHOULDER DROP-OFF (PLAQUE)
W10-1	42RND.	9.62						RAILROAD CROSSING
WO12-1	24X24	4.00						DOUBLE DOWN ARROW (SYMBOL)
WO12-2	48X48	16.00						LOW CLEARANCE (SYMBOL)
WO12-2x	24X18	3.00						LOW CLEARANCE (PLAQUE)
WO12-2a	84X24	14.00						OVERHEAD LOW CLEARANCE (FEET AND INCHES)
WO12-4	120X60	50.00						LOW CLEARANCE XX FT XX IN XX MILES AHEAD
WO12-5	120X60	50.00						WIDTH RESTRICTION XX FT XX IN XX MILES AHEAD
WO13-1	30X30	6.25						ADVISORY SPEED (PLAQUE)
WO16-2	30X24	5.00	2	10.00			20B	500 FEET (PLAQUE)
WO16-3	30X24	5.00						X MILE (PLAQUE)
WO20-1	48X48	16.00						ROAD/BRIDGE/RAMP WORK AHEAD
WO20-2	48X48	16.00						DETOUR AHEAD
WO20-3	48X48	16.00	4	64.00			20A	ROAD CLOSED AHEAD
WO20-4	48X48	16.00						ONE LANE ROAD AHEAD
WO20-5	48X48	16.00						RIGHT/CENTER/LEFT LANE CLOSED AHEAD
WO20-5a	48X48	16.00						2 RIGHT/CENTER/LEFT LANES CLOSED AHEAD
WO20-6a	48X48	16.00						RIGHT/CENTER/LEFT LANE CLOSED
WO20-7a	48X48	16.00						FLAGGER (SYMBOL)
WO21-2	36X36	9.00						FRESH OIL
WO21-5	48X48	16.00						SHOULDER WORK / SHOULDER WORK AHEAD
WO22-1	48X48	16.00						BLASTING ZONE AHEAD
WO22-2	42X36	10.50						TURN OFF 2-WAY RADIO AND PHONE
WO22-3	42X36	10.50						END BLASTING ZONE
GO22-1	21X15	2.19						WET PAINT (ARROW PIVOTS)

SIGN	SIZE IN.	AREA SQ.FT.	QTY EACH	TOTAL SQ.FT.	QTY RELOC EACH	TOTAL RELOC SQ.FT.	SIGN NO.	DESCRIPTION
GUIDE SIGNS								
E05-1	36X48	12.00						GORE EXIT
E05-2	48X36	12.00						EXIT OPEN
E05-2a	48X36	12.00						EXIT CLOSED
GO20-1	60X24	10.00						ROAD WORK NEXT XX MILES
GO20-2	48X24	8.00						END ROAD WORK
GO20-4	36X18	4.50						PILOT CAR FOLLOW ME
GO20-4a	42X30	8.75						PILOT CAR IN USE WAIT & FOLLOW
GO20-4a	18X12	1.50						PILOT CAR IN USE WAIT & FOLLOW
GO20-5aP	36X24	6.00						WORK ZONE (PLAQUE)
MO4-8a	24X18	3.00						END DETOUR
MO4-9L	48X36	12.00						DETOUR (LEFT)
MO4-9R	48X36	12.00						DETOUR (RIGHT)
MO4-9P	48X12	4.00						STREET NAME (PLAQUE)
MO4-10L	48X18	6.00						DETOUR ARROW (LEFT)
MO4-10R	48X18	6.00						DETOUR ARROW (RIGHT)
REGULATORY SIGNS								
R1-1	48X48	13.25						STOP
R1-2	48TRI.	6.93						YIELD
R1-2a	36X36	9.00						TO ONCOMING TRAFFIC (PLAQUE)
R1-3P	30X12	2.50						ALL WAY (PLAQUE)
R2-1	36X48	12.00						SPEED LIMIT XX
R3-1	48X48	16.00						NO RIGHT TURN (SYMBOL)
R3-2	48X48	16.00						NO LEFT TURN (SYMBOL)
R3-3	36X36	9.00						NO TURNS
R3-4	48X48	16.00						NO U-TURN (SYMBOL)
R3-7L	30X30	6.25						LEFT LANE MUST TURN LEFT
R3-7R	30X30	6.25						RIGHT LANE MUST TURN RIGHT
R4-1	36X48	12.00						DO NOT PASS
R4-2	36X48	12.00						PASS WITH CARE
R4-7a	36X48	12.00						KEEP RIGHT (HORIZONTAL ARROW)
R4-8a	36X48	12.00						KEEP LEFT (HORIZONTAL ARROW)
R5-1	30X30	6.25						DO NOT ENTER
R5-1a	36X24	6.00						WRONG WAY
R6-1L	54X18	6.75						ONE WAY ARROW (LEFT)
R6-1R	54X18	6.75						ONE WAY ARROW (RIGHT)
R6-2L	24X30	5.00						ONE WAY (LEFT)
R6-2R	24X30	5.00						ONE WAY (RIGHT)
R9-9	24X12	2.00						SIDEWALK CLOSED
R9-11L	24X18	3.00						SIDEWALK CLOSED AHEAD, (ARROW LEFT) CROSS HERE
R9-11R	24X18	3.00						SIDEWALK CLOSED AHEAD, (ARROW RIGHT) CROSS HERE
R10-6	24X36	6.00						STOP HERE ON RED (45^ ARROW)
R11-2	48X30	10.00	2	20.00			29	ROAD CLOSED
							55B	ROAD CLOSED 1 MILES AHEAD
R11-3a	60X30	12.50	1	12.50				LOCAL TRAFFIC ONLY
R11-4	60X30	12.50	3	37.50			55A	ROAD CLOSED TO THRU TRAFFIC
CONST-3A	60X48	20.00						FINE SIGN
CONST-3X	56X12	4.67						SPEEDING/PASSING (PLATE)
MISCELLANEOUS SIGNS								
CONST-5	48X36	12.00						POINT OF PRESENCE
CONST-5	96X48	32.00						POINT OF PRESENCE
CONST-8	48X36	12.00						WORK ZONE NO PHONE ZONE
SPECIAL	96X48	32.00	1	32.00	1	32.00	48A	ROUTE K BRIDGE CLOSED AHEAD
SPECIAL	96X48	32.00	1	32.00	1	32.00	48B	ROUTE K BRIDGE CLOSED AHEAD
SPECIAL	96X48	32.00	1	32.00			48C	ROUTE K BRIDGE CLOSED AHEAD
SPECIAL	96X48	32.00	1	32.00			48D	ROUTE K BRIDGE CLOSED AHEAD
SPECIAL	96X48	32.00	1	32.00			48E	ROUTE K BRIDGE CLOSED AHEAD

616-10.05 CONSTRUCTION SIGNS	TOTAL
	304

616-10.10 RELOCATED SIGNS	TOTAL
	64

ITEM NUMBER	TOTAL QTY	EFFECTIVE: 07-01-2025 DESCRIPTION
6122008		IMPACT ATTENUATOR 40 MPH (SAND BARRELS)
6122009		IMPACT ATTENUATOR 45 MPH (SAND BARRELS)
6122010		IMPACT ATTENUATOR 50 MPH (SAND BARRELS)
6122012		IMPACT ATTENUATOR 55 MPH (SAND BARRELS)
6122014		IMPACT ATTENUATOR 60 MPH (SAND BARRELS)
6122017		IMPACT ATTENUATOR 65 MPH (SAND BARRELS)
6122019		IMPACT ATTENUATOR 70 MPH (SAND BARRELS)
6122020		REPLACEMENT SAND BARREL
6122030		IMPACT ATTENUATOR (RELOCATION)
6122040		WORK ZONE CRASH CUSHION (NARROW)
6122041		WORK ZONE CRASH CUSHION (RELOCATION)
6123001		TRUCK MOUNTED ATTENUATOR (TMA)
6161012		BUOYS (BOATS KEEP OUT)
6161013		BUOYS (NO WAKE)
6161014		SPECIAL SIGN ASSEMBLY (BOATS KEEP OUT)
6161020		CHANNELIZER (DRUM-LIKE)
6161022		CHANNELIZER (CONE)
6161025		CHANNELIZER (TRIM-LINE)
6161026		CHANNELIZER (VERTICAL PANEL)
6161030	14	TYPE 3 MOVEABLE BARRICADE
6161033		DIRECTION INDICATOR BARRICADE
6161040		FLASHING ARROW PANEL
6161047		TYPE 3 OBJECT MARKER
6161055		SEQUENTIAL FLASHING WARNING LIGHT
6161070		TUBULAR MARKER
6161095		RADAR SPEED ADVISORY SYSTEM
6161096		CHANGEABLE MESSAGE SIGN, COMMISSION FURNISHED/RETAINED
6161098A		CHANGEABLE MESSAGE SIGN WITHOUT COMM. INTERFACE, CONTRACTOR FURNISHED/RETAINED
6161099		CHANGEABLE MESSAGE SIGN WITH COMM. INTERFACE, CONTRACTOR FURNISHED/RETAINED
6162000A		WORK ZONE TRAFFIC SIGNAL SYSTEM
6162002		TEMPORARY LONG-TERM RUMBLE STRIPS
6173600D		TEMPORARY TRAFFIC BARRIER, CONTRACTOR FURNISHED/RETAINED
6173700B		TEMP. TRAFFIC BARRIER ANCHORED, CONTRACTOR FURNISHED/RETAINED
6173706		TEMP. TRAFFIC BARRIER STIFFNESS TRANSITION CONTRACTOR FURNISHED/RETAINED
6174000A		TEMP. TRAFFIC BARRIER HEIGHT TRANSITION, CONTRACTOR FURNISHED/RETAINED
6175010A		RELOCATING TEMPORARY TRAFFIC BARRIER
6175011B		RELOCATING TEMP. TRAFFIC BARRIER ANCHORED
6175013		RELOCATING TEMP. TRAFFIC BARRIER STIFFNESS
6175020A		RELOCATING TEMP. TRAFFIC BARRIER HEIGHT
6208064A		TEMPORARY RAISED PAVEMENT MARKER
9029400		TEMPORARY TRAFFIC SIGNALS
9029401		TEMPORARY TRAFFIC SIGNALS AND LIGHTING

STATE OF MISSOURI
ZACHARY S. WALKER
NUMBER PE-2010000977
PROFESSIONAL ENGINEER
09/28/2026 2:08:59 PM
ZACHARY S. WALKER - CIVIL
MO-PE-2010000877

DATE PREPARED
9/16/2026

ROUTE	STATE
K	MO
DISTRICT	SHEET NO.
NE	3

COUNTY
KNOX

JOB NO.
JNE0156

CONTRACT ID.

PROJECT NO.

BRIDGE NO.

DESCRIPTION

DATE

MISSOURI HIGHWAYS AND TRANSPORTATION COMMISSION

105 WEST CAPITOL
JEFFERSON CITY, MO 65102
1-888-ASK-MODOT (1-888-275-6636)

QUANTITY SHEET
SHEET 3 OF 3

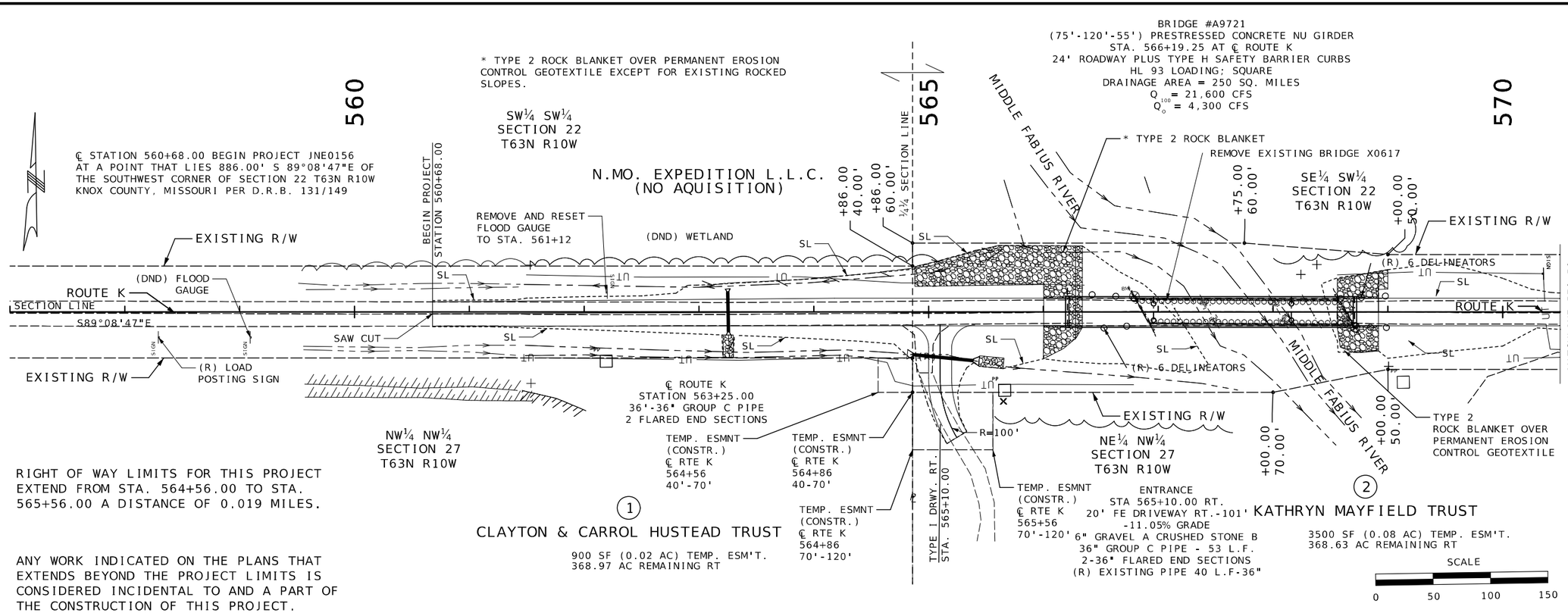

STATE OF MISSOURI
ZACHARY S. WALKER
NUMBER PE-2010000877
PROFESSIONAL ENGINEER
09/28/2026 12:38:48 PM
ZACHARY S. WALKER - CIVIL
MO-PE-2010000877

DATE PREPARED
9/17/2026

ROUTE	STATE
K	MO
DISTRICT	SHEET NO.
NE	4

COUNTY
KNOX

JOB NO.
JNE0156

CONTRACT ID.

PROJECT NO.

BRIDGE NO.

DATE	DESCRIPTION

MISSOURI HIGHWAYS AND TRANSPORTATION COMMISSION

105 WEST CAPITOL
JEFFERSON CITY, MO 65102
1-888-ASK-MODOT (1-888-275-6636)

PLAN SHEET
SHEET 1 OF 2

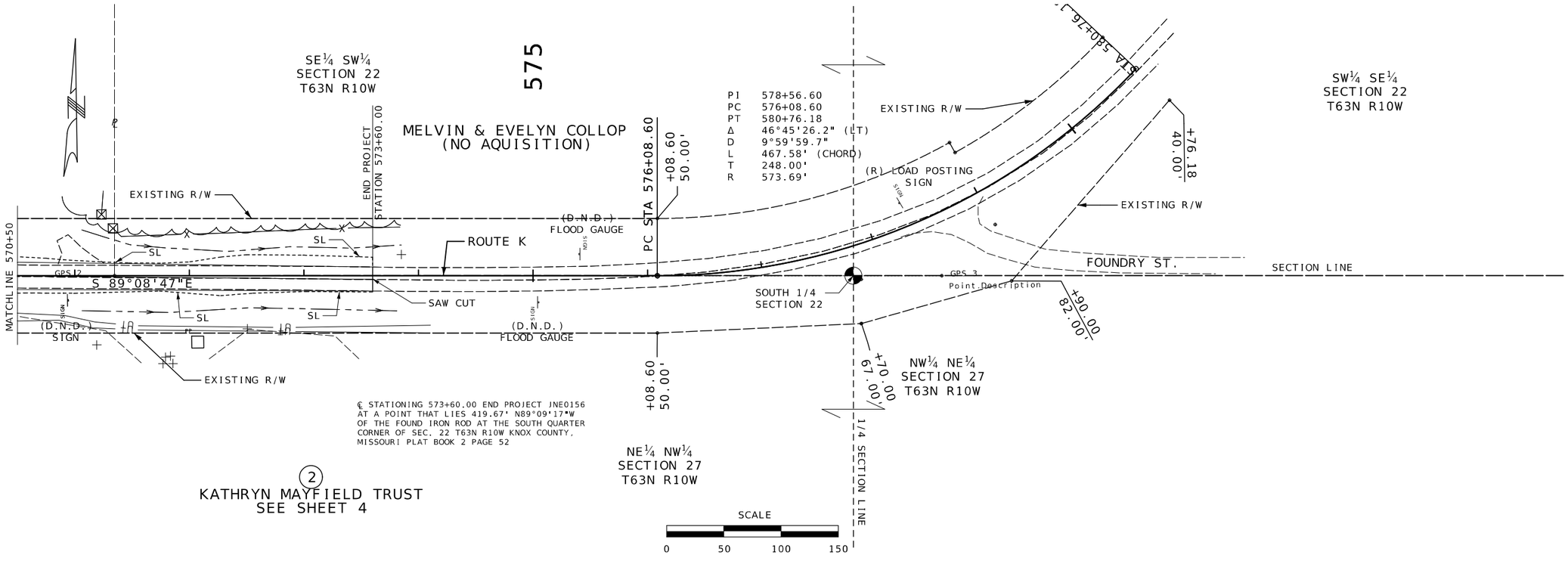

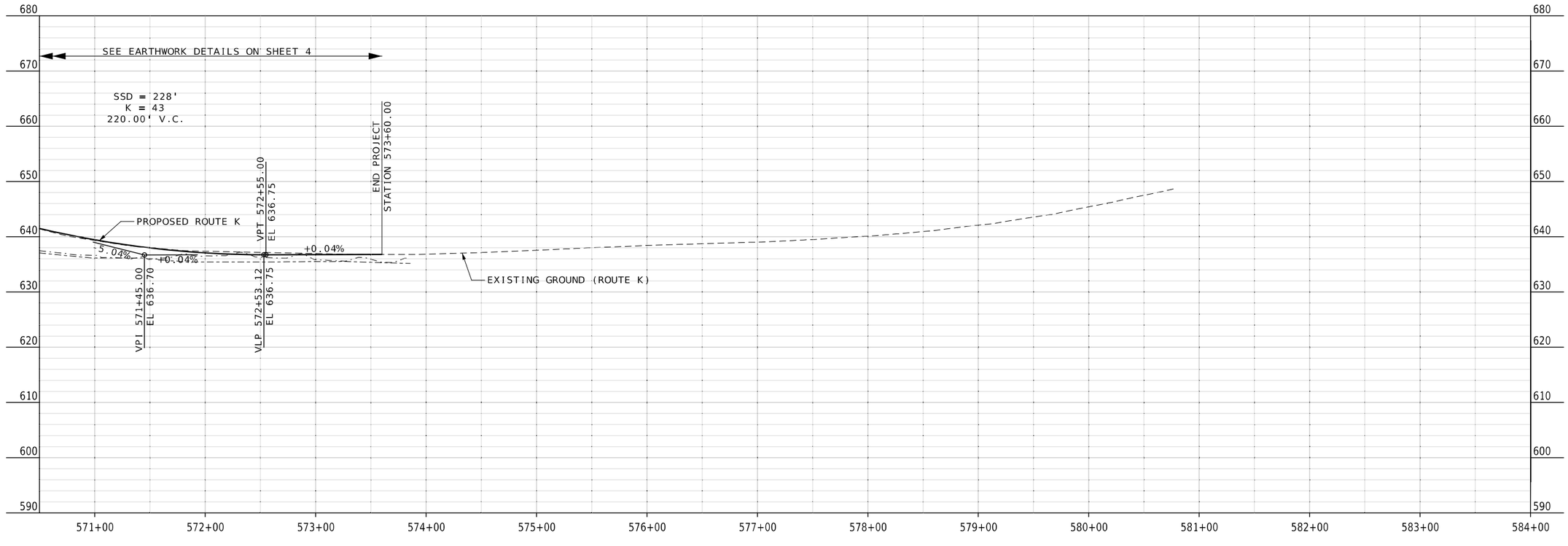

STATE OF MISSOURI
ZACHARY S. WALKER
NUMBER PE-2010000877
PROFESSIONAL ENGINEER
09/28/2026 12:39:50 PM
ZACHARY S. WALKER - CIVIL
MO-PE-2010000877

DATE PREPARED
9/17/2026

ROUTE	STATE
K	MO
DISTRICT	SHEET NO.
NE	5

COUNTY
KNOX

JOB NO.
JNE0156

CONTRACT ID.

PROJECT NO.

BRIDGE NO.

DATE	DESCRIPTION

MISSOURI HIGHWAYS AND TRANSPORTATION COMMISSION
105 WEST CAPITOL
JEFFERSON CITY, MO 65102
1-888-ASK-MODOT (1-888-275-6636)

PLAN SHEET
SHEET 2 OF 2

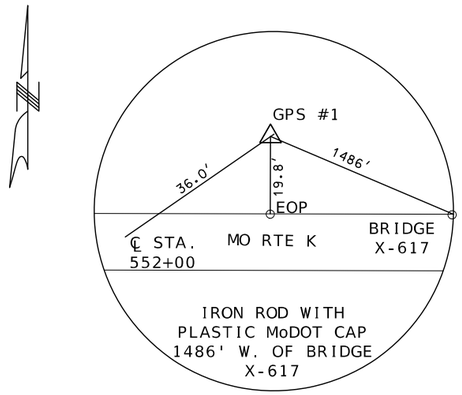

CONTROL POINT GPS #1
SET IRON ROD
STATE PLANE COORDINATES
N: 1606398.340
E: 1778017.110
EL: 638.966

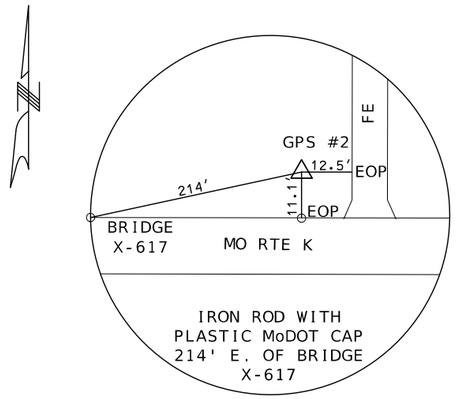

CONTROL POINT GPS #2
SET IRON ROD
STATE PLANE COORDINATES
N: 1606360.276
E: 1779874.089
EL: 637.558

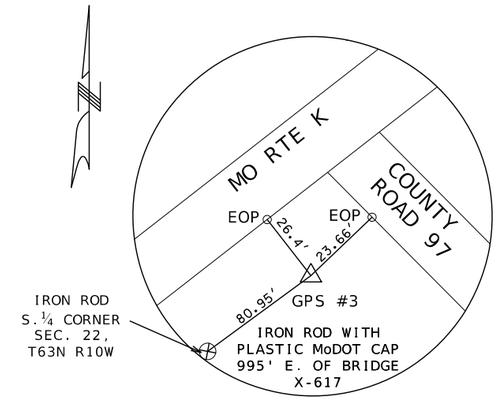

CONTROL POINT GPS #3
SET IRON ROD
STATE PLANE COORDINATES
N: 1606348.331
E: 1780655.848
EL: 640.239

HORIZONTAL CONTROL POINTS (MODOT VRS)

PROJECTION FACTOR 1.00007087524208
GRID FACTOR 0.999929124757916
GEOID 18-CENTRAL ZONE
NOTE: MULTIPLY STATE PLANE COORDINATES BY THE PROJECTION FACTOR TO OBTAIN MODIFIED COORDINATES

STATE OF MISSOURI
ZACHARY S. WALKER
NUMBER PE-2010000877
PROFESSIONAL ENGINEER
09/28/2026 12:41:05 PM
ZACHARY S. WALKER - CIVIL
MO-PE-2010000877

DATE PREPARED: 9/16/2026

ROUTE	STATE
K	MO
DISTRICT	SHEET NO.
NE	6

COUNTY: KNOX
JOB NO.: JNE0156
CONTRACT ID.:
PROJECT NO.:
BRIDGE NO.:

DESCRIPTION | DATE

MISSOURI HIGHWAYS AND TRANSPORTATION COMMISSION
105 WEST CAPITOL
JEFFERSON CITY, MO 65102
1-888-ASK-MODOT (1-888-275-6636)

REFERENCE POINTS
SHEET 1 OF 1

ALL PROJECT COORDINATES HAVE BEEN PROJECTED FROM THE MISSOURI STATE PLANE COORDINATE (SPC) SYSTEM OF 1983 USING AN AVERAGE PROJECT PROJECTION (GRID TO GROUND) FACTOR. TO GET BACK TO STATE PLANE COORDINATES, MULTIPY THE PROJECT COORDINATES BY THE AVERAGE GRID FACTOR AS SHOWN IN THE "REFERENCE CONTROL INFORMATION" PORTION OF THIS TABLE.

PROJECT COORDINATE INFORMATION

COORDINATE SYSTEM	MODIFIED STATE PLANE (GROUND)
HORIZONTAL DATUM	NAD 83(2011) EPOCH 2010.0
VERTICAL DATUM	NAVD 88: GNSS DERIVED
GEOID MODEL	18
ELEVATIONS DETERMINED BY	DIFFERENTIAL LEVELING / GPS - MODOT VRS
PROJECT PROJECTION FACTOR	1.00007088

REFERENCE CONTROL INFORMATION

COORDINATE SYSTEM	MO COORDINATE SYSTEM OF 1983
CONTROL STATION	MISSOURI CORS
DESIGNATION	MODOT EDINA CORS ARP
CORS_ID	MOED
PID	DM4674
LATITUDE	40 11 11.65638 N
LONGITUDE	092 10 30.28770 W
NORTHING (M)	483213.8820
EASTING (M)	527668.6980
ZONE	CENTRAL
PROJECT AVERAGE GRID FACTOR	0.99992912

EXAMPLE OF PROJECT COORDINATE TO S.P.C.

PROJECT NORTHING X AVERAGE GRID FACTOR
= STATE PLANE NORTHING
PROJECT EASTING X AVERAGE GRID FACTOR
= STATE PLANE EASTING

EXAMPLE: CONTROL POINT #__GPS 6_
N 1606512.1939 X 0.99992912475792 = 1606398.340
E 1778143.1274 X 0.99992912475792 = 1778017.110

LINEAR UNIT CONVERSION

1 METER = 3.280833333 US SURVEY FEET (USFT)

COORDINATE POINT LISTING

SHEET NO	STATION	LOCATION	OFFSET (US FT)	MODIFIED STATE PLANE (GROUND) NORTHING (US SURVEY FT)	EASTING (US SURVEY FT)	ELEVATION (US SURVEY FT)	DESCRIPTION	GPK POINT ID
PROJECT CONTROL POINTS								
	552+18.79	CL ROUTE K	30.51' ' LT	1,606,512.1939	1,778,143.1274	638.9660	CONTROL POINT GPS 1	1
5	570+76.26	CL ROUTE K	20.12' LT	1,606,474.1272	1,780,000.2380	637.5580	CONTROL POINT GPS 2	2
5	578+51.16	CL ROUTE K	30.81' RT	1,606,462.1813	1,780,782.0524	640.2390	CONTROL POINT GPS 3	3
ALIGNMENTS								
4	560+68.00	CL ROUTE K	0.00	1,606,469.0347	1,778,991.7868	637.85	BEGIN PROJECT	
4	566+19.25	CL ROUTE K	0.00	1,606,460.8226	1,779,542.9756	648.21	FILL FACE BRIDGE A9721	
4	568+72.75	CL ROUTE K	0.00	1,606,457.0461	1,779,796.4475	648.18	FILL FACE BRIDGE A9721	
5	573+60.00	CL ROUTE K	3.28' RT	1,606,449.7875	1,780,283.6434	636.79	END PROJECT	

STATE OF MISSOURI
ZACHARY S. WALKER
NUMBER PE-2010000877
PROFESSIONAL ENGINEER
09/28/2026 12:41:56 PM
ZACHARY S. WALKER - CIVIL
MO-PE-2010000877

DATE PREPARED
9/16/2026

ROUTE	STATE
K	MO
DISTRICT	SHEET NO.
NE	7

COUNTY
KNOX

JOB NO.
JNE0156

CONTRACT ID.

PROJECT NO.

BRIDGE NO.

DESCRIPTION	DATE

MISSOURI HIGHWAYS AND TRANSPORTATION COMMISSION
105 WEST CAPITOL
JEFFERSON CITY, MO 65102
1-888-ASK-MODOT (1-888-275-6636)

COORDINATE POINTS
SHEET 1 OF 1

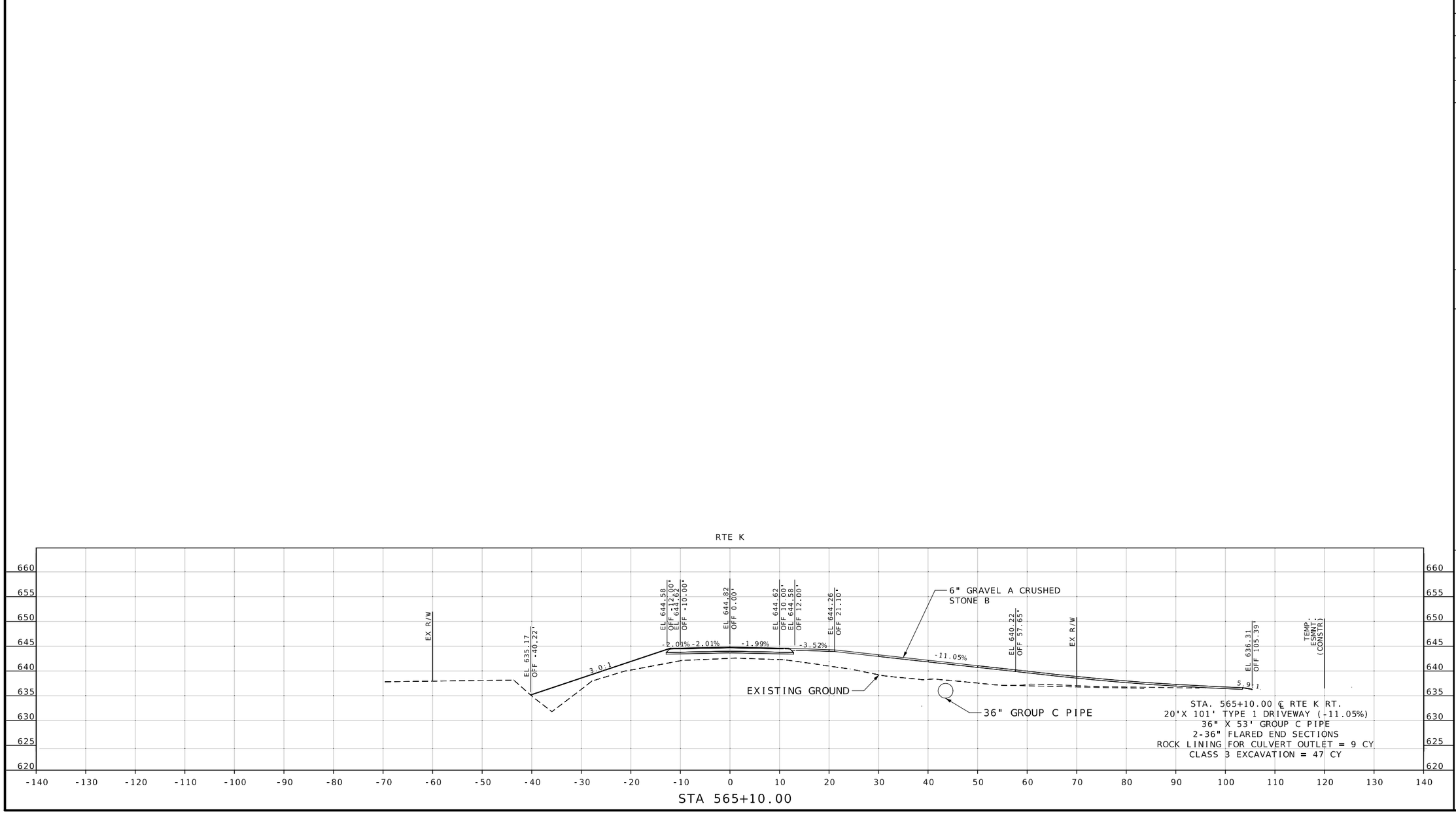

STATE OF MISSOURI
ZACHARY S. WALKER
NUMBER PE-2010000877
PROFESSIONAL ENGINEER

09/28/2026 12:42:48 PM
ZACHARY S. WALKER - CIVIL
MO-PE-2010000877

DATE PREPARED
9/16/2026

ROUTE	STATE
K	MO
DISTRICT	SHEET NO.
NE	8

COUNTY
KNOX

JOB NO.
JNE0156

CONTRACT ID.

PROJECT NO.

BRIDGE NO.

DESCRIPTION	DATE

MISSOURI HIGHWAYS AND TRANSPORTATION COMMISSION

105 WEST CAPITOL
JEFFERSON CITY, MO 65102
1-888-ASK-MODOT (1-888-275-6636)

SPECIAL SHEET
ENTRANCE SECTION
SHEET 1 OF 1

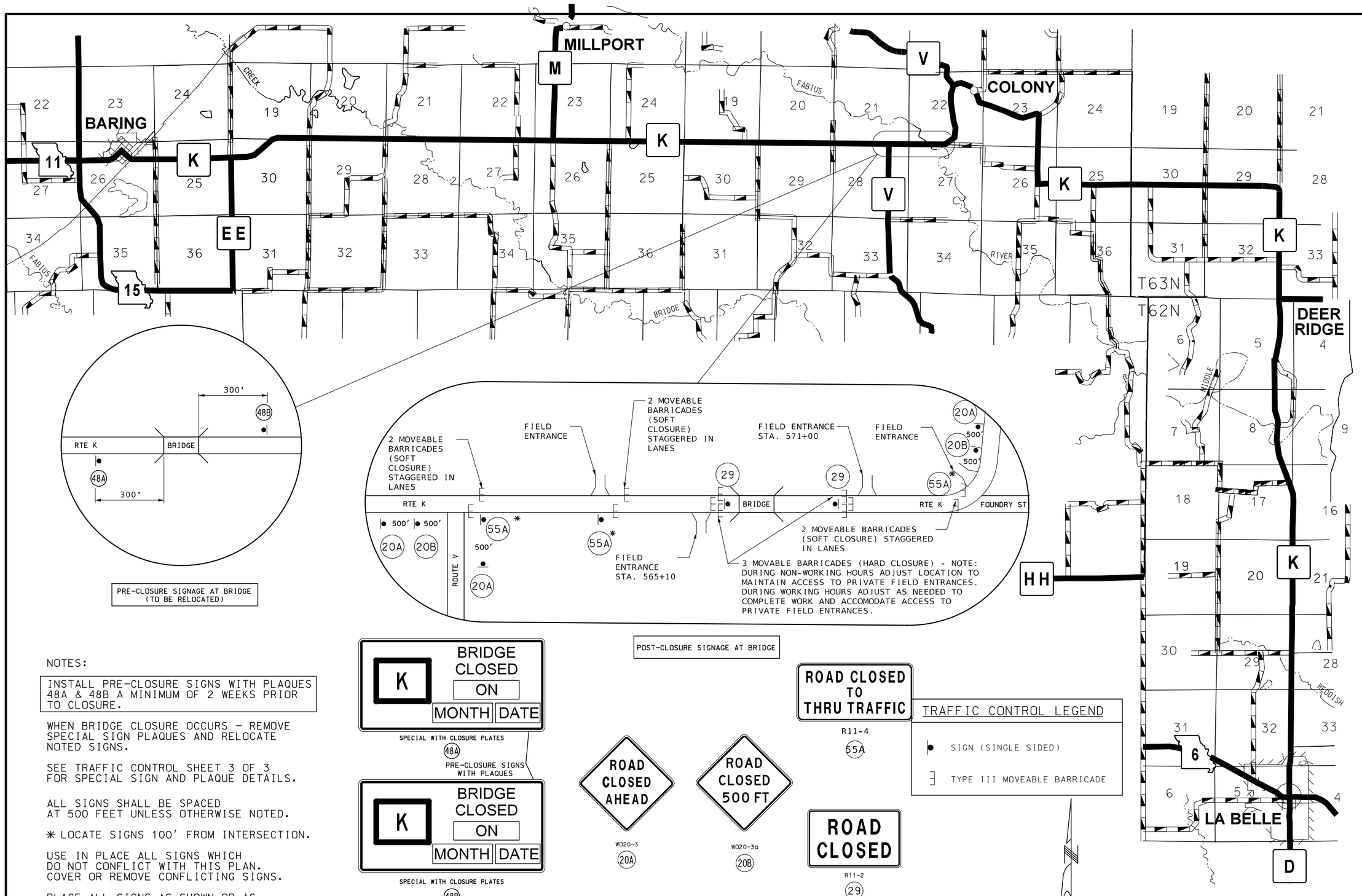

PRE-CLOSURE SIGNAGE AT BRIDGE
(TO BE RELOCATED)

POST-CLOSURE SIGNAGE AT BRIDGE

NOTES:

INSTALL PRE-CLOSURE SIGNS WITH PLAQUES 48A & 48B A MINIMUM OF 2 WEEKS PRIOR TO CLOSURE.

WHEN BRIDGE CLOSURE OCCURS – REMOVE SPECIAL SIGN PLAQUES AND RELOCATE NOTED SIGNS.

SEE TRAFFIC CONTROL SHEET 3 OF 3 FOR SPECIAL SIGN AND PLAQUE DETAILS.

ALL SIGNS SHALL BE SPACED AT 500 FEET UNLESS OTHERWISE NOTED.

✳ LOCATE SIGNS 100' FROM INTERSECTION.

USE IN PLACE ALL SIGNS WHICH DO NOT CONFLICT WITH THIS PLAN. COVER OR REMOVE CONFLICTING SIGNS.

PLACE ALL SIGNS AS SHOWN OR AS DIRECTED BY THE ENGINEER.

SPECIAL WITH CLOSURE PLATES
48A

PRE-CLOSURE SIGNS WITH PLAQUES

SPECIAL WITH CLOSURE PLATES
48B

W020-3
20A

W020-3a
20B

R11-4
55A

R11-2
29

TRAFFIC CONTROL LEGEND

- SIGN (SINGLE SIDED)
- TYPE III MOVEABLE BARRICADE

NOT TO SCALE

TRAFFIC CONTROL NEAR BRIDGE - PRE-CLOSURE / POST-CLOSURE

STATE OF MISSOURI
ZACHARY S. WALKER
NUMBER PE-2010000877
PROFESSIONAL ENGINEER
09/28/2026 12:44:59 PM
ZACHARY S. WALKER - CIVIL
MO-PE-2010000877

DATE PREPARED
9/16/2026

ROUTE	STATE
K	MO
DISTRICT	SHEET NO.
NE	9

COUNTY
KNOX

JOB NO.
JNE0156

CONTRACT ID.

PROJECT NO.

BRIDGE NO.

DESCRIPTION	DATE

MISSOURI HIGHWAYS AND TRANSPORTATION COMMISSION

105 WEST CAPITOL
JEFFERSON CITY, MO 65102
1-888-ASK-MODOT (1-888-275-6636)

TRAFFIC CONTROL
SHEET 1 OF 3

NOTES:

WHEN BRIDGE CLOSURE OCCURS – REMOVE SPECIAL SIGN PLAQUES AND RELOCATE NOTED SIGNS.

SEE TRAFFIC CONTROL SHEET 3 OF 3 FOR SPECIAL SIGN AND PLAQUE DETAILS.

ALL SIGNS SHALL BE SPACED AT 500 FEET UNLESS OTHERWISE NOTED.

✳ LOCATE SIGNS 100' FROM INTERSECTION.

USE IN PLACE ALL SIGNS WHICH DO NOT CONFLICT WITH THIS PLAN. COVER OR REMOVE CONFLICTING SIGNS.

PLACE ALL SIGNS AS SHOWN OR AS DIRECTED BY THE ENGINEER.

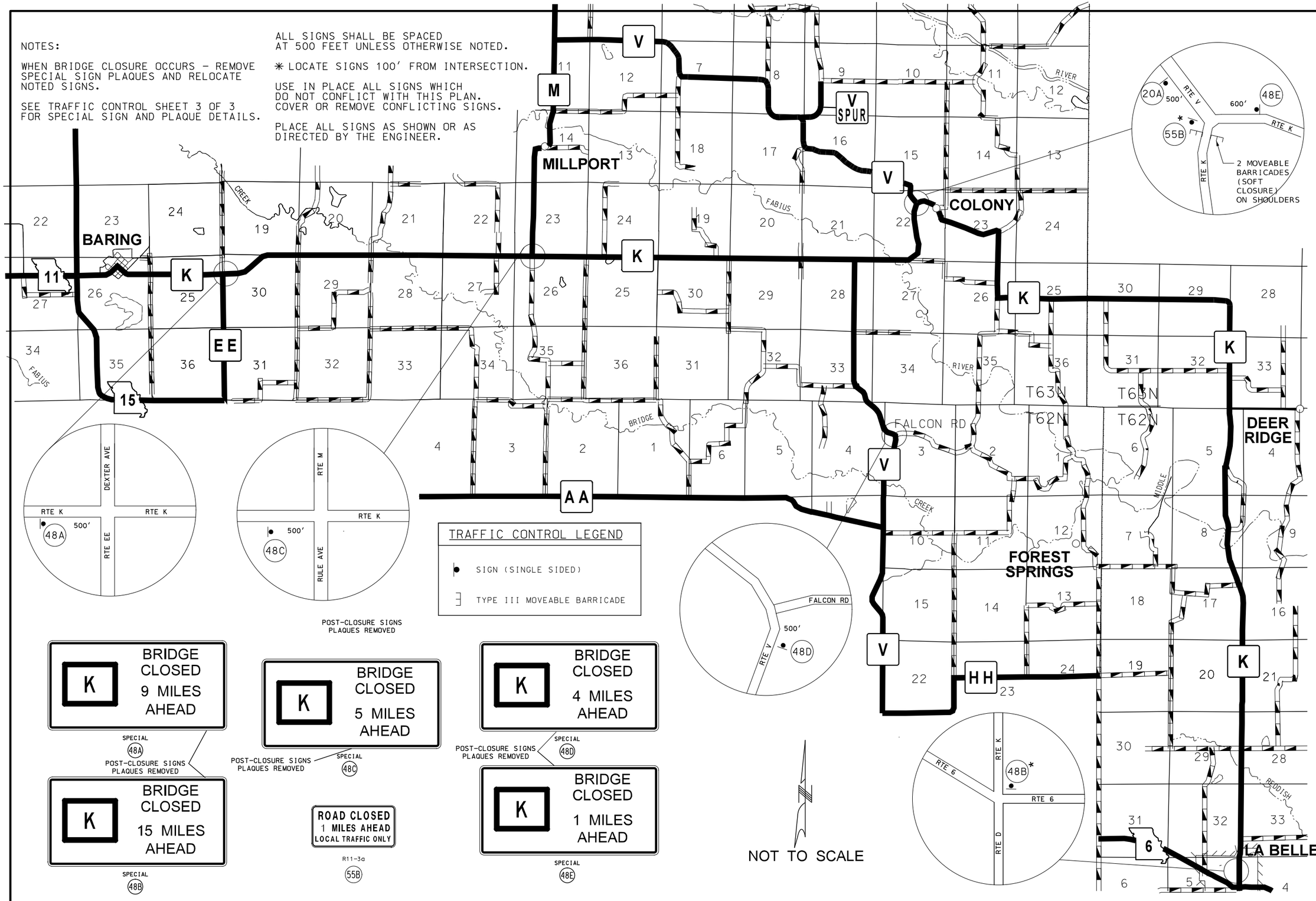

TRAFFIC CONTROL LEGEND

- SIGN (SINGLE SIDED)
- TYPE III MOVEABLE BARRICADE

POST-CLOSURE SIGNS PLAQUES REMOVED

NOT TO SCALE

TRAFFIC CONTROL ADVANCED WARNING - POST-CLOSURE

STATE OF MISSOURI
ZACHARY S. WALKER
NUMBER PE-2010000877
PROFESSIONAL ENGINEER
09/28/2026 12:47:06 PM
ZACHARY S. WALKER - CIVIL
MO-PE-2010000877

DATE PREPARED: 9/16/2026

ROUTE	STATE
K	MO
DISTRICT	SHEET NO.
NE	10

COUNTY: KNOX

JOB NO.: JNE0156

CONTRACT ID.:

PROJECT NO.:

BRIDGE NO.:

DESCRIPTION	DATE

MISSOURI HIGHWAYS AND TRANSPORTATION COMMISSION

105 WEST CAPITOL
JEFFERSON CITY, MO 65102
1-888-ASK-MODOT (1-888-275-6636)

MoDOT

TRAFFIC CONTROL SHEET 2 OF 3



SHF-FLAT SHEET FLUORESCENT:
No border, Black on Orange:
[JAN] E Mod:
Table of letter and object lefts.

J	A	N
1.000	6.750	14.000



SHF-FLAT SHEET FLUORESCENT:
No border, Black on Orange:
[FEB] E Mod:
Table of letter and object lefts.

F	E	B
1.000	6.750	12.375



SHF-FLAT SHEET FLUORESCENT:
No border, Black on Orange:
[MAR] E Mod:
Table of letter and object lefts.

M	A	R
1.000	7.750	15.000



SHF-FLAT SHEET FLUORESCENT:
No border, Black on Orange:
[APR] E Mod:
Table of letter and object lefts.

A	P	R
1.000	8.250	14.500



SHF-FLAT SHEET FLUORESCENT:
No border, Black on Orange:
[MAY] E Mod 75% spacing:
Table of letter and object lefts.

M	A	Y
1.000	7.500	13.750



SHF-FLAT SHEET FLUORESCENT:
No border, Black on Orange:
[JUN] E Mod:
Table of letter and object lefts.

J	U	N
1.000	7.125	13.375



SHF-FLAT SHEET FLUORESCENT:
No border, Black on Orange:
[JUL] E Mod:
Table of letter and object lefts.

J	U	L
1.000	7.000	13.375



SHF-FLAT SHEET FLUORESCENT:
No border, Black on Orange:
[AUG] E Mod:
Table of letter and object lefts.

A	U	G
1.000	8.250	14.500



SHF-FLAT SHEET FLUORESCENT:
No border, Black on Orange:
[SEP] E Mod:
Table of letter and object lefts.

S	E	P
1.000	7.250	13.000



SHF-FLAT SHEET FLUORESCENT:
No border, Black on Orange:
[OCT] E Mod:
Table of letter and object lefts.

O	C	T
1.000	7.250	12.875



SHF-FLAT SHEET FLUORESCENT:
No border, Black on Orange:
[NOV] E Mod:
Table of letter and object lefts.

N	O	V
1.000	7.250	13.500



SHF-FLAT SHEET FLUORESCENT:
No border, Black on Orange:
[DEC] E Mod:
Table of letter and object lefts.

D	E	C
1.000	7.250	13.000



SHF-FLAT SHEET FLUORESCENT: No border, Black on Orange:
[ON] E Mod:
Table of letter and object lefts.

O	N
18.375	24.875



SHF-FLAT SHEET FLUORESCENT:
No border, Black on Orange:
[0] E Mod:
Table of letter and object lefts.

0
1.500



SHF-FLAT SHEET FLUORESCENT:
No border, Black on Orange:
[1] E Mod:
Table of letter and object lefts.

I
3.125



SHF-FLAT SHEET FLUORESCENT:
No border, Black on Orange:
[2] E Mod:
Table of letter and object lefts.

2
1.625

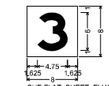

SHF-FLAT SHEET FLUORESCENT:
No border, Black on Orange:
[3] E Mod:
Table of letter and object lefts.

3
1.625



SHF-FLAT SHEET FLUORESCENT:
No border, Black on Orange:
[4] E Mod:
Table of letter and object lefts.

4
1.250



SHF-FLAT SHEET FLUORESCENT:
No border, Black on Orange:
[5] E Mod:
Table of letter and object lefts.

5
1.625



SHF-FLAT SHEET FLUORESCENT:
No border, Black on Orange:
[6] E Mod:
Table of letter and object lefts.

6
1.625



SHF-FLAT SHEET FLUORESCENT:
No border, Black on Orange:
[7] E Mod:
Table of letter and object lefts.

7
1.625

SHF-FLAT SHEET FLUORESCENT:
No border, Black on Orange:
[8] E Mod:
Table of letter and object lefts.

8
1.625



SHF-FLAT SHEET FLUORESCENT:
No border, Black on Orange:
[9] E Mod:
Table of letter and object lefts.

9
1.625

PRE-CLOSURE SPECIAL SIGN



SPECIAL WITH CLOSURE PLATES

PRE-CLOSURE SPECIAL SIGN

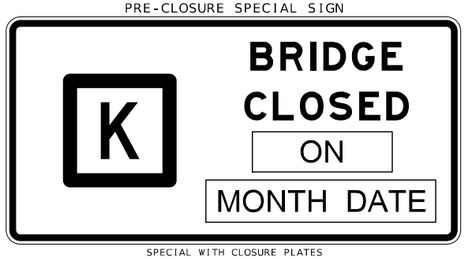

SPECIAL WITH CLOSURE PLATES

48E

POST-CLOSURE SPECIAL SIGN

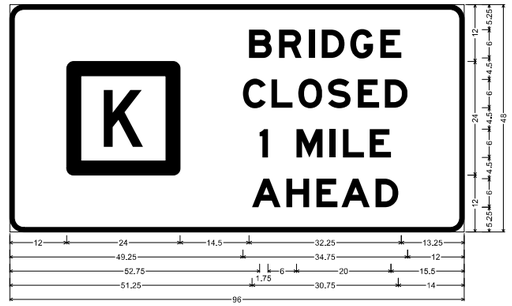

MO4-13 SHF-FLAT SHEET FLUORESCENT;
3.000" Radius, 1.000" Border, Black on Orange:
"BRIDGE", E Mod: "CLOSED", E Mod: "1 MILE", E Mod: "AHEAD", E Mod:
Table of letter and object lefts

B	B	R	I	D	G	E
12.000	50.500	56.875	63.125	65.875	71.875	78.250
C	L	O	S	E	D	
49.250	55.250	61.000	67.250	73.500	79.250	
I	M	I	L	E		
52.750	60.500	67.625	70.375	76.000		
A	H	E	A	D		
51.250	58.375	64.750	70.000	77.250		

48A

POST-CLOSURE SPECIAL SIGN

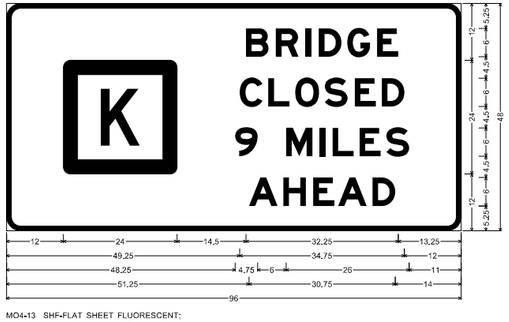

MO4-13 SHF-FLAT SHEET FLUORESCENT:
3.000" Radius, 1.000" Border, Black on Orange:
"BRIDGE", E Mod; "CLOSED", E Mod; "9 MILES", E Mod; "AHEAD", E Mod;
Table of letter and object lefts

B	B	R	I	D	G	E
12.000	50.500	56.875	63.125	65.875	71.875	78.250
C	L	O	S	E	D	
49.250	55.250	61.000	67.250	73.500	79.250	
9	M	I	L	E	S	
48.250	59.000	66.125	68.875	74.500	80.250	
A	H	E	A	D		
51.250	58.375	64.750	70.000	77.250		

48B

POST-CLOSURE SPECIAL SIGN

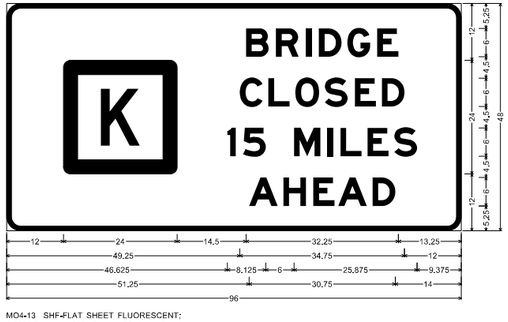

MO4-13 SHF-FLAT SHEET FLUORESCENT:
3.000" Radius, 1.000" Border, Black on Orange;
"BRIDGE", E Mod; "CLOSED", E Mod; "15 MILES", E Mod; "AHEAD", E Mod;
Table of letter and object lefts

B	B	R	I	D	G	E
12.000	50.500	56.875	63.125	65.875	71.875	78.250
C	L	O	S	E	D	
49.250	55.250	61.000	67.250	73.500	79.250	
I	S	M	I	L	E	S
46.625	49.875	60.750	67.750	70.500	76.250	81.875
A	H	E	A	D		
51.250	58.375	64.750	70.000	77.250		

48C

POST-CLOSURE SPECIAL SIGN

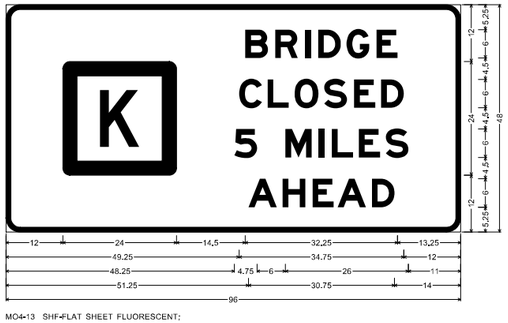

MO4-13 SHF-FLAT SHEET FLUORESCENT:
3.000" Radius, 1.000" Border, Black on Orange;
"BRIDGE", E Mod: "CLOSED", E Mod; "5 MILES", E Mod: "AHEAD", E Mod:
Table of letter and object lefts

B	B	R	I	D	G	E
12.000	50.500	56.875	63.125	65.875	71.875	78.250
C	L	O	S	E	D	
49.250	55.250	61.000	67.250	73.500	79.250	
5	M	I	L	E	S	
48.250	59.000	66.125	68.875	74.500	80.250	
A	H	E	A	D		
51.250	58.375	64.750	70.000	77.250		

48D

POST-CLOSURE SPECIAL SIGN

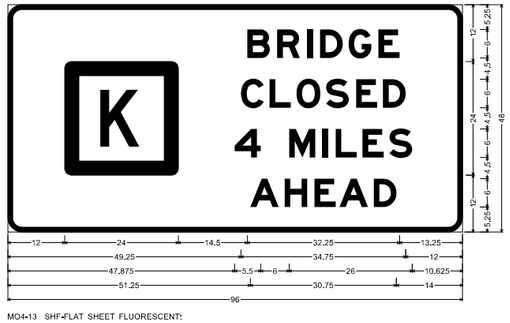

MO4-13 SHF-FLAT SHEET FLUORESCENT:
3.000" Radius, 1.000" Border, Black on Orange;
"BRIDGE", E Mod; "CLOSED", E Mod: "4 MILES", E Mod: "AHEAD", E Mod;
Table of letter and object lefts

B	B	R	I	D	G	E
12.000	50.500	56.875	63.125	65.875	71.875	78.250
C	L	O	S	E	D	
49.250	55.250	61.000	67.250	73.500	79.250	
4	M	I	L	E	S	
47.875	59.375	66.500	69.250	74.875	80.625	
A	H	E	A	D		
51.250	58.375	64.750	70.000	77.250		

STATE OF MISSOURI
ZACHARY S. WALKER
NUMBER PE-2010000877
PROFESSIONAL ENGINEER
09/28/2026 1:55:53 PM
ZACHARY S. WALKER - CIVIL
MO-PE-2010000877

DATE PREPARED
9/28/2026

ROUTE	STATE
K	MO
DISTRICT	SHEET NO.
NE	11

COUNTY
KNOX

JOB NO.
JNE0156

CONTRACT ID.

PROJECT NO.

BRIDGE NO.

DESCRIPTION	DATE

MISSOURI HIGHWAYS AND TRANSPORTATION COMMISSION

105 WEST CAPITOL
JEFFERSON CITY, MO 65102
1-888-ASK-MODOT (1-888-275-6636)

TRAFFIC CONTROL
SIGN DETAILS
SHEET 3 OF 3

TEMPORARY EROSION CONTROL LEGEND

- ROCK DITCH CHECK
- TEMPORARY BERM TYPE C
- SILT FENCE

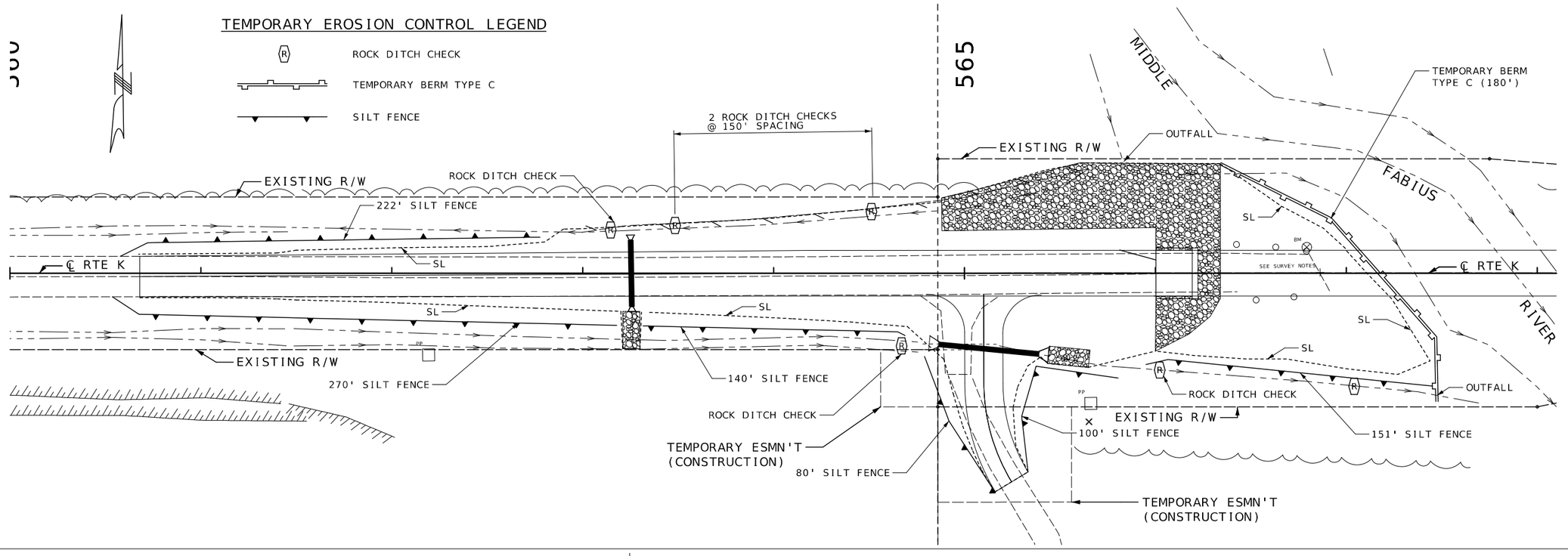

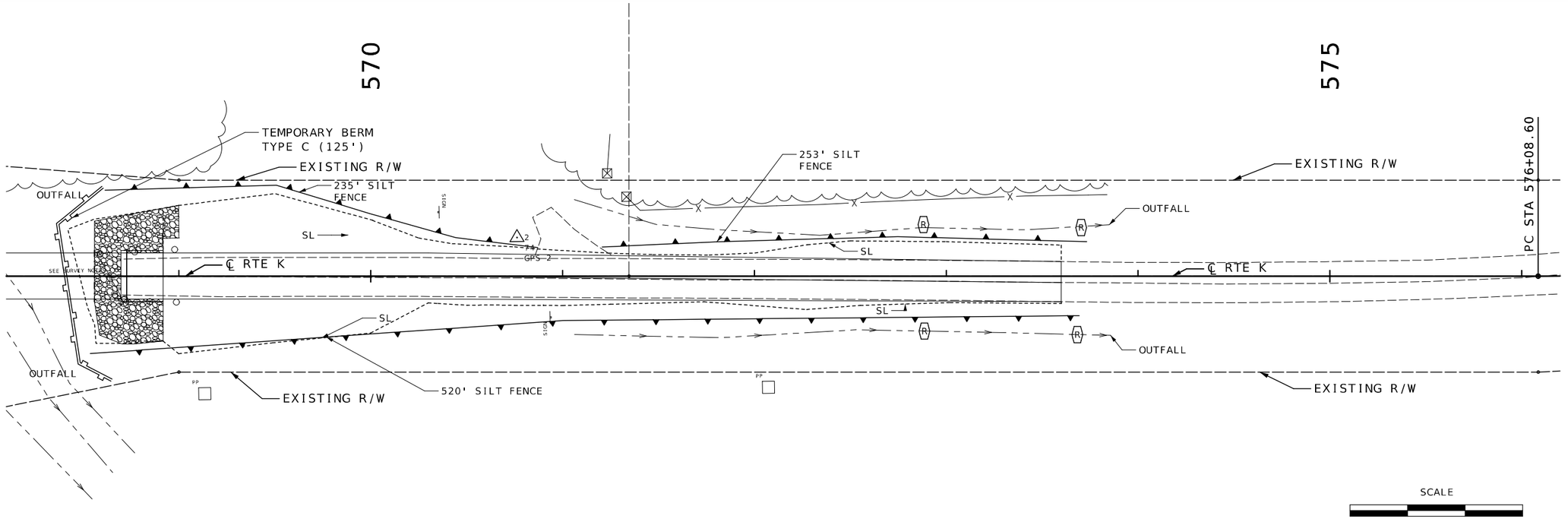

STATE OF MISSOURI
ZACHARY S. WALKER
NUMBER PE-2010000877
PROFESSIONAL ENGINEER
09/28/2026 12:50:18 PM
ZACHARY S. WALKER - CIVIL
MO-PE-2010000877

DATE PREPARED
9/16/2026

ROUTE	STATE
K	MO
DISTRICT	SHEET NO.
NE	12

COUNTY
KNOX

JOB NO.
JNE0156

CONTRACT ID.

PROJECT NO.

BRIDGE NO.

DESCRIPTION

DATE

MISSOURI HIGHWAYS AND TRANSPORTATION COMMISSION

105 WEST CAPITOL
JEFFERSON CITY, MO 65102
1-888-ASK-MODOT (1-888-275-6636)

EROSION CONTROL SHEET
SHEET 1 OF 1

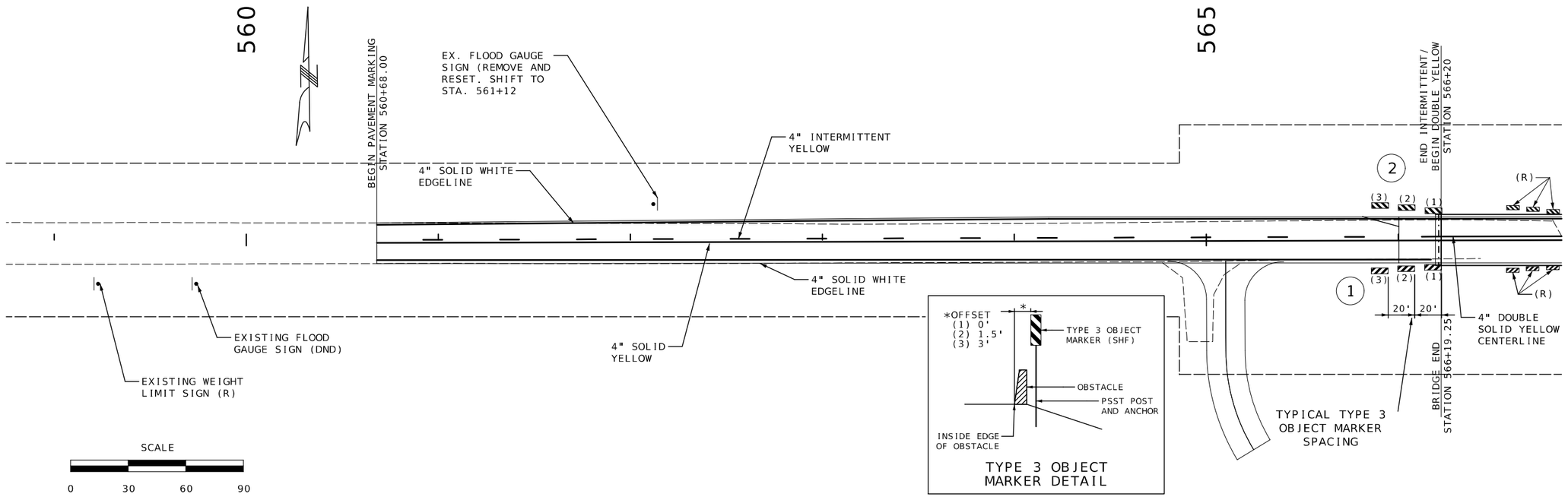

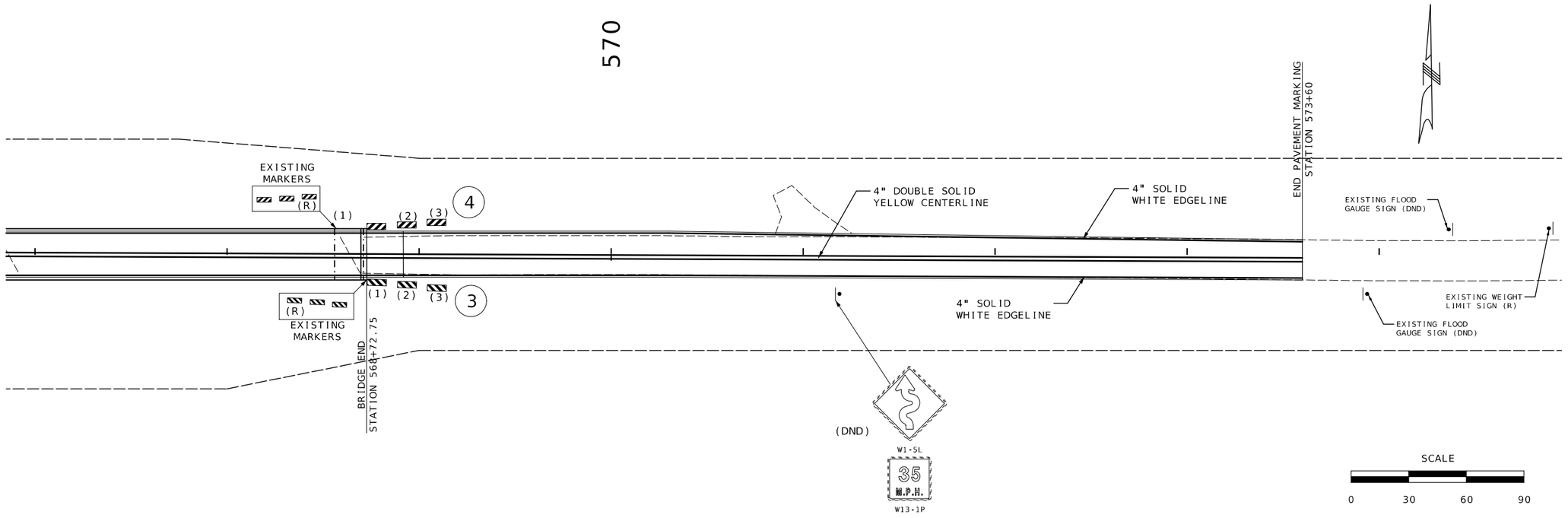

STATE OF MISSOURI
ZACHARY S. WALKER
NUMBER PE-2010000877
PROFESSIONAL ENGINEER
09/28/2026 12:51:51 PM
ZACHARY S. WALKER - CIVIL
MO-PE-2010000877

DATE PREPARED
9/17/2026

ROUTE	STATE
K	MO
DISTRICT	SHEET NO.
NE	13

COUNTY
KNOX

JOB NO.
JNE0156

CONTRACT ID.

PROJECT NO.

BRIDGE NO.

DESCRIPTION	DATE

MISSOURI HIGHWAYS AND TRANSPORTATION COMMISSION

105 WEST CAPITOL
JEFFERSON CITY, MO 65102
1-888-ASK-MODOT (1-888-275-6636)

SIGNING/PAVEMENT MARKING
SHEET 1 OF 1

PARCEL 2 ENTRANCE

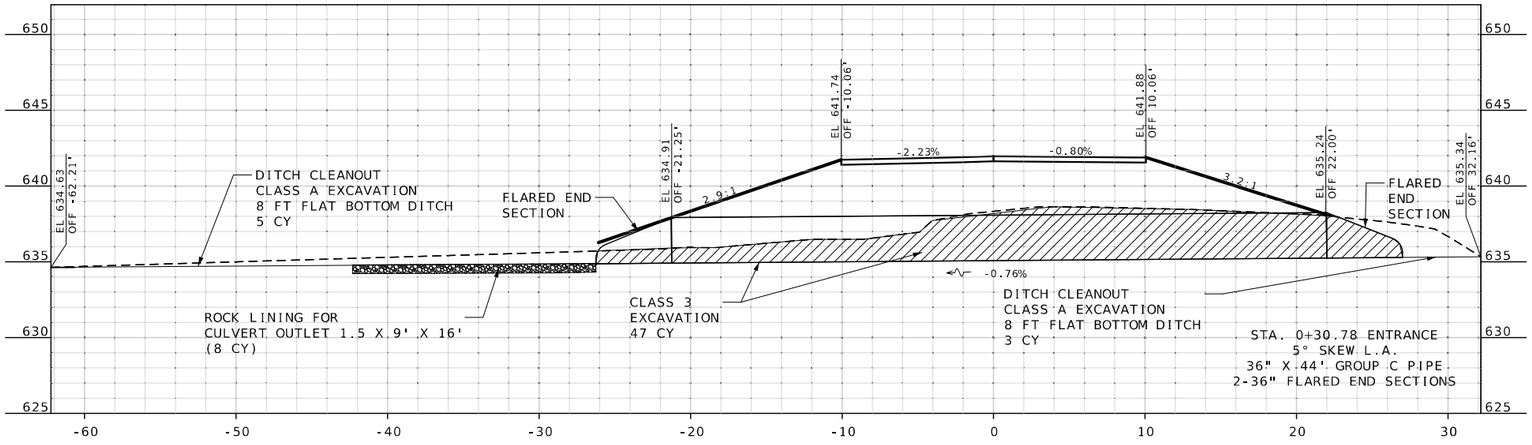

STA 0+30.78

RTE K

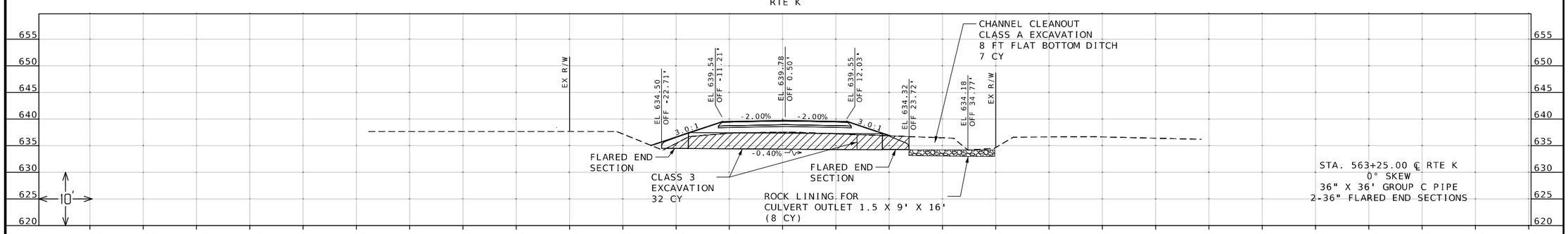

STA 563+25.00

STATE OF MISSOURI
ZACHARY S. WALKER
NUMBER PE-2010000877
PROFESSIONAL ENGINEER

09/28/2026 12:56:17 PM
ZACHARY S. WALKER - CIVIL
MO-PE-2010000877

DATE PREPARED
9/16/2026

ROUTE	STATE
K	MO
DISTRICT	SHEET NO.
NE	14

COUNTY
KNOX

JOB NO.
JNE0156

CONTRACT ID.

PROJECT NO.

BRIDGE NO.

DESCRIPTION	DATE

MISSOURI HIGHWAYS AND TRANSPORTATION COMMISSION

105 WEST CAPITOL
JEFFERSON CITY, MO 65102
1-888-ASK-MODOT (1-888-275-6636)

CULVERT SECTIONS
SHEET 1 OF 1

SEC/SUR 22 TWP 63N RGE 10W

(75'-120'-55') PRESTRESSED CONCRETE NU-GIRDER SPANS

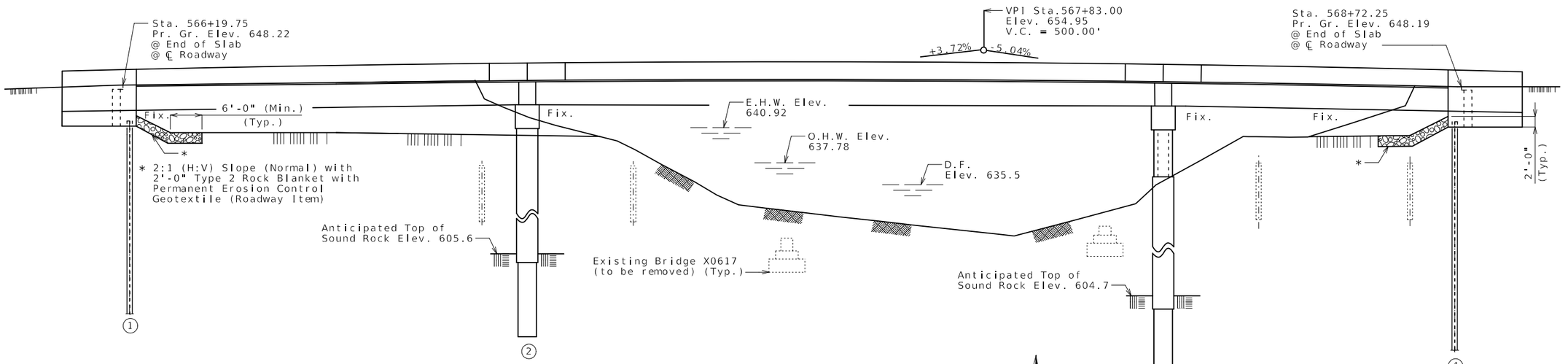

GENERAL ELEVATION

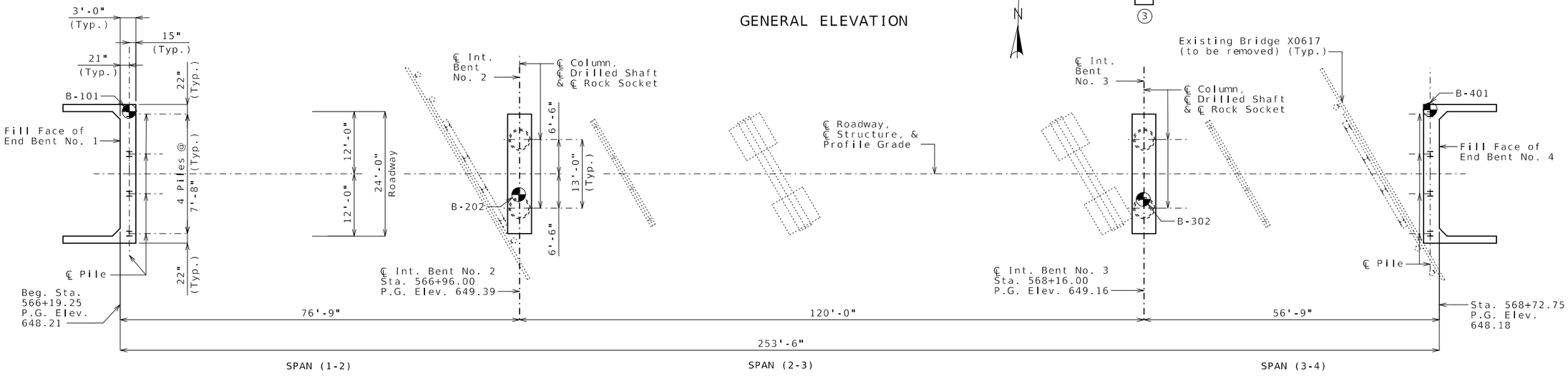

PLAN

Indicates location of borings

Notice and Disclaimer regarding Boring Log Data

The locations of all subsurface borings for this structure are shown on the plan sheet(s) for this structure. The boring data for all locations indicated, as well as any other boring logs or other factual records of subsurface data and investigations performed by the department for the design of the project, are shown on Sheet No. 33 and may be included in the Electronic Bridge Deliverables. They will also be available from the Project Contact upon written request. No greater significance or weight should be given to the boring data depicted on the plan sheets than is given to the subsurface data available from the district or elsewhere.

The Commission does not represent or warrant that any such boring data accurately depicts the conditions to be encountered in constructing this project. A contractor assumes all risks it may encounter in basing its bid prices, time or schedule of performance on the boring data depicted here or those available from the district, or on any other documentation not expressly warranted, which the contractor may obtain from the Commission.

Notes:

For General Notes, Hydrologic Data, Foundation Data, Estimated Quantities, Estimated Quantities for Slab on Concrete NU-Girder and Location Sketch, see Sheet No. 2.

Roadway fill shall be completed to the final roadway section and up to the elevation of the bottom of the concrete beam within the limits of the structure and for not less than 25 feet in back of the fill face of the end bents before any piles are driven for any bents falling within the embankment section.

BM #1-24 - NAIL AND SHINER IN THE NW WOODEN WING WALL OF BRIDGE X-617 (13.65' LT) ELEV. 648.50

BM #2-24 - NAIL AND SHINER IN THE SE WOODEN WING WALL OF BRIDGE X-617 (13.25'RT) ELEV. 648.40

BRIDGE: ROUTE K OVER MIDDLE FABIUS RIVER

ROUTE K FROM ROUTE V SOUTH TO ROUTE V NORTH
ABOUT 0.5 MILE EAST OF ROUTE V SOUTH
BEGINNING STATION 566+19.25

Detailed May 2026
Checked Jul. 2026

Note: This drawing is not to scale. Follow dimensions.

STATE OF MISSOURI
TIMOTHY D. LEAF
NUMBER PE-2012000778
PROFESSIONAL ENGINEER
10/06/2026 3:20:01 PM
TIMOTHY D.LEAF - CIVIL
MO-PE-2012000778

DATE PREPARED
10/6/2026

ROUTE	STATE
K	MO
DISTRICT	SHEET NO.
BR	1

COUNTY
KNOX

JOB NO.
JNE0156

CONTRACT ID.

PROJECT NO.

BRIDGE NO.
A9721

DESCRIPTION	DATE

MISSOURI HIGHWAYS AND TRANSPORTATION COMMISSION
105 WEST CAPITOL
JEFFERSON CITY, MO 65102
1-888-ASK-MODOT (1-888-275-6636)

GENERAL NOTES:

Design Specifications:

2020 AASHTO LRFD Bridge Design Specifications (9th Ed.)
2023 AASHTO Guide Spacification for LRFD Seismic Bridge Design (3rd Ed.)

Seismic Design Category = A (Nonseismic)

Design earthquake response spectral acceleration coefficient at 1.0 second period, S_{D1} = 0.121g.

Acceleration Coefficient (effective peak ground acceleration coefficient), A_S = 0.0576g.

Design Loading:

Vehicular = HL-93
Future Wearing Surface = 35 lb/sf
Earth = 120 lb/cf
Equivalent Fluid Pressure = 45 lb/cf (Min.)
Superstructure: Simply-Supported, Non-Composite for dead load.
Continuous Composite for live load.

Design Unit Stresses:

Class B Concrete (Substructure)	f'c = 3,000 psi
Class B-2 Concrete (Drilled Shafts & Rock Sockets)	f'c = 4,000 psi
Class B-1 Concrete (Barrier)	f'c = 4,000 psi
Class B-2 Concrete (Superstructure, except Prestressed Girders and Barrier)	f'c = 4,000 psi
Reinforcing Steel (ASTM A706 Grade 60)	fy = 60,000 psi
Structural Steel HP Pile (ASTM A709 Grade 50)	fy = 50,000 psi

For prestressed girder stresses, see Sheets No. 15 thru 20.

Neoprene Pads:

Neoprene bearing pads shall be 60 durometer and shall be in accordance with Sec 716.

Joint Filler:

All joint filler shall be in accordance with Sec 1057 for preformed sponge rubber expansion and partition joint filler, except as noted.

Reinforcing Steel:

Minimum clearance to reinforcing steel shall be 1 1/2", unless otherwise shown.

Traffic Handling:

Structure to be closed during construction. Traffic to be maintained on other routes. See roadway plans for traffic control.

Estimated Quantities for Slab on Concrete NU-Girder

Item		Total
Class B-2 Concrete	cu. yard	248
Reinforcing Steel (Epoxy Coated)	pound	70,360

The table of Estimated Quantities for Slab on Concrete NU-Girder represents the quantities used by the State in preparing the cost estimate for concrete slabs. The area of the concrete slab will be measured to the nearest square yard longitudinally from end of slab to end of slab and transversely from out to out of bridge slab (or with the horizontal dimensions as shown on the plan of slab). Payment for conventional forms and stay-in-place corrugated steel forms, all concrete and epoxy coated reinforcing steel will be considered completely covered by the contract unit price for the slab. Variations may be encountered in the estimated quantities but the variations cannot be used for an adjustment in the contract unit price.

Method of forming the slab shall be as shown on the plans and in accordance with Sec 703. All hardware for forming the slab to be left in place as a permanent part of the structure shall be coated in accordance with ASTM A123 or ASTM B633 with a thickness class SC 4 and a finish type I, II or III.

Slab shall be cast-in-place with conventional forms or stay-in-place corrugated steel forms. Precast prestressed panels will not be permitted.

Estimated Quantities

Item		Substr.	Superstr.	Total
Class 1 Excavation	cu. yard	90		90
Removal of Bridges (X0617)	lump sum			1
Bridge Approach Slab (Minor)	sq. yard		109	109
Drilled Shafts (4 ft. 0 in. Dia.)	linear foot	119.4		119.4
Rock Sockets (3 ft. 6 in. Dia.)	linear foot	98.0		98.0
Video Camera Inspection	each	4		4
Foundation Inspection Holes	linear foot	138.0		138.0
Sonic Logging Testing	each	4		4
Galvanized Structural Steel Piles (12 in.)	linear foot	308		308
Dynamic Pile Testing	each	2		2
Pre-Bore for Piling	linear foot	108		108
Pile Point Reinforcement	each	8		8
Class B Concrete (Substructure)	cu. yard	67.1		67.1
Type H Barrier	linear foot		551	551
Slab on Concrete NU-Girder	sq. yard		745	745
NU 53, Prestressed Concrete NU-Girder	linear foot		749	749
Reinforcing Steel (Bridges)	pound	26,760		26,760
Steel Intermediate Diaphragm for P/S Concrete Girders	each		8	8
Slab Drain	each		22	22
Vertical Drain at End Bents	each	2		2
Laminated Neoprene Bearing Pad	each		18	18

All concrete above the construction joint in the end bents is included in the Estimated Quantities for Slab on Concrete NU-Girder.

All reinforcement in the end bents is included in the Estimated Quantities for Slab on Concrete NU-Girder.

All reinforcement in the intermediate bent concrete diaphragms except reinforcement embedded in the beam cap is included in the Estimated Quantities for Slab on Concrete NU-Girder.

All concrete above the intermediate beam cap is included in the Estimated Quantities for Slab on Concrete NU-Girder.

Foundation Data

Type	Design Data		Bent Number 1	2	3	4
Load Bearing Pile	Pile Type and Size		HP 12x53	–	–	HP 12x53
	Number	ea	4	–	–	4
	Approximate Length Per Each	ft	37	–	–	40
	Pile Point Reinforcement	ea	All	–	–	All
	Min. Galvanized Penetration (Elev.)	ft	Full Length	–	–	Full Length
	Pile Driving Verification Method		DT	–	–	DT
	Resistance Factor		0.65	–	–	0.65
	Minimum Nominal Axial Compressive Resistance	kip	323	–	–	273
Rock Socket	Number	ea	–	2	2	–
	Layer 1 Foundation Material		–	Weak Rock	Weak Rock	–
	Layer 1 Elevation Range	ft	–	605.6-585.6	604.7-598.7	–
	Layer 1 Minimum Nominal Axial Compressive Resistance (Side Resistance)	ksf	–	–	–	–
	Layer 2 Foundation Material		–	Strong Rock	Strong Rock	–
	Layer 2 Elevation Range	ft	–	585.6-573.0	598.7-573.1	–
	Layer 2 Minimum Nominal Axial Compressive Resistance (Side Resistance)	ksf	–	20.2	20.2	–
	Minimum Nominal Axial Compressive Resistance (Tip Resistance)	ksf	–	186.5	186.5	–

Load Bearing Pile:

DT= Dynamic Testing

Minimum Nominal Axial Compressive Resistance = $\frac{\text{Maximum Factored Loads}}{\text{Resistance Factor}}$

Rock Socket (Drilled Shafts):

Minimum Nominal Axial Compressive Resistance (Side Resistance + Tip Resistance) = $\frac{\text{Maximum Factored Loads}}{\text{Resistance Factor}}$

Prebore for piles at Bent No. 4 to elevation 612.8.

Hydrologic Data

Drainage Area = 250 mi^2
Design Flood Frequency = 1.2 years
Design Flood Discharge = 3400 cfs
Design Flood (D.F.) Elevation = 635.5
Base Flood (100-year)
Base Flood Elevation = 641.0
Base Flood Discharge = 21,600 cfs
Estimated Backwater = 0.3 ft
Average Velocity thru Opening = 6.5 ft/s
Freeboard (50-year)
Freeboard = 2.1 ft
Roadway Overtopping
Overtopping Flood Discharge = 4,300 cfs
Overtopping Flood Frequency = 1.8 years
Overtopping Flood Elevation = 636.7

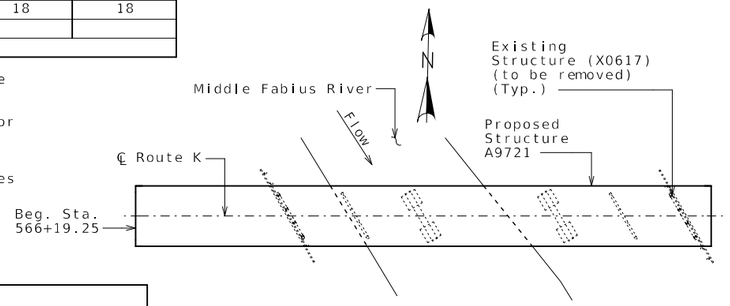

LOCATION SKETCH

Load Bearing Pile:

All piles shall be galvanized down to the minimum galvanized penetration (elevation).

Pile point reinforcement need not be galvanized. Shop drawings will not be required for pile point reinforcement.

HP piles are anticipated to be driven to refusal on rock. Review all borings for depth of rock and restrict driving as appropriate to comply with hard rock driving criteria in accordance with Sec 702. When pile refusal on rock occurs, as approved by the engineer, the minimum nominal axial compressive resistance is verified and no additional pile driving verification method is required.

STATE OF MISSOURI
TIMOTHY D. LEAF
NUMBER PE-2012000778
PROFESSIONAL ENGINEER
10/06/2026 3:20:17 PM
TIMOTHY D. LEAF - CIVIL
MO-PE-2012000778

DATE PREPARED 10/6/2026

ROUTE	STATE
K	MO
DISTRICT	SHEET NO.
BR	2

COUNTY KNOX
JOB NO. JNE0156
CONTRACT ID.
PROJECT NO.
BRIDGE NO. A9721

DESCRIPTION | DATE

MISSOURI HIGHWAYS AND TRANSPORTATION COMMISSION
105 WEST CAPITOL
JEFFERSON CITY, MO 65102
1-888-ASK-MODOT (1-888-275-6636)

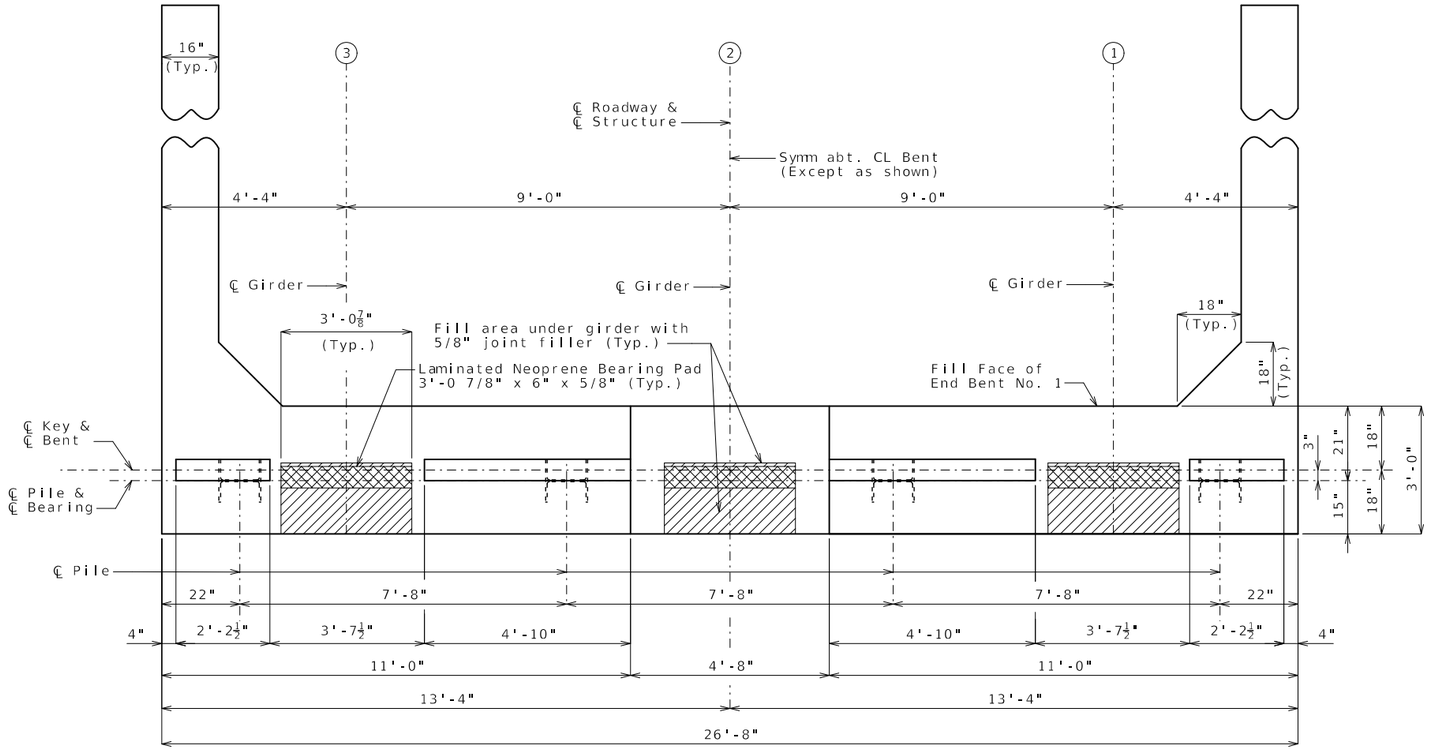

PLAN OF BEAM

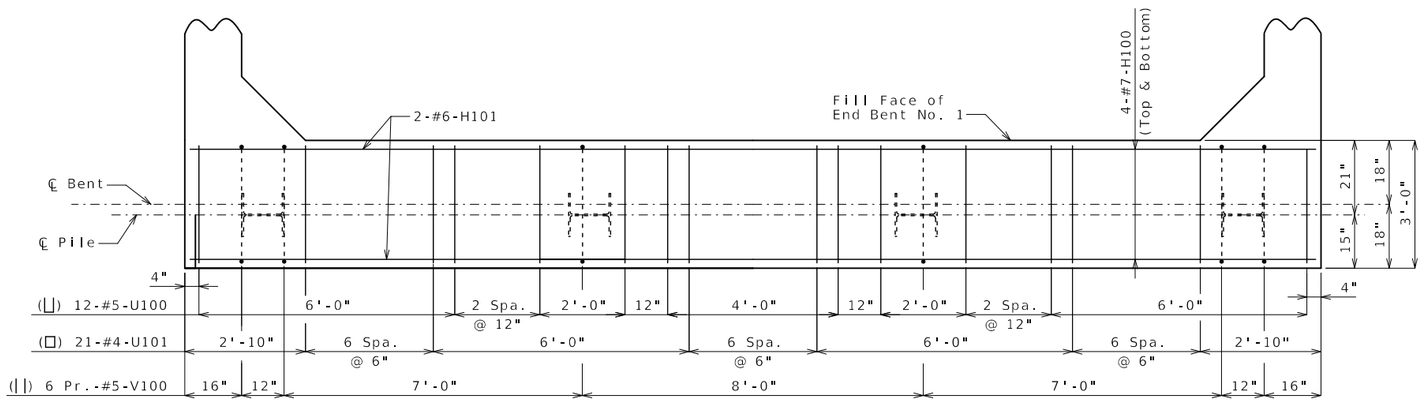

PLAN OF BEAM SHOWING REINFORCEMENT

(Steps & keys not shown for clarity)

Substructure Quantity Table for Bent No. 1		
Item		Quantity
Class 1 Excavation	cu. yard	45
Galvanized Structural Steel Piles (12 in.)	linear foot	148
Dynamic Pile Testing	each	1
Pile Point Reinforcement	each	4
Class B Concrete (Substructure)	cu. yard	12.5

These quantities are included in the Estimated Quantities table on Sheet No. 2.

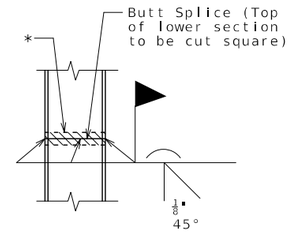

STEEL PILE SPLICE

(If required)

* Galvanizing material shall be omitted or removed one inch clear of weld locations in accordance with Sec 702.

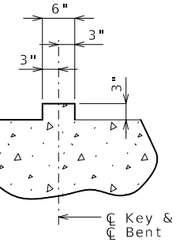

SECTION THRU KEY

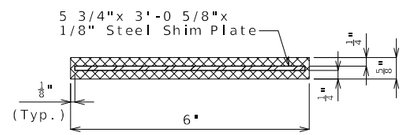

TYPICAL SECTION THRU LAMINATED NEOPRENE BEARING PAD

Notes:

Work this sheet with Sheets No. 4 & 5.

Reinforcing steel shall be shifted to clear piles. U bars shall clear piles by at least 1 1/2 inches.

For details of vertical drain at end bent, see Sheet No. 6.

END BENT NO. 1

Detailed Feb. 2026
Checked May 2026

Note: This drawing is not to scale. Follow dimensions.

STATE OF MISSOURI
TIMOTHY D. LEAF
NUMBER PE-2012000778
PROFESSIONAL ENGINEER
10/06/2026 3:20:29 PM
TIMOTHY D. LEAF - CIVIL
MO-PE-2012000778

DATE PREPARED
10/6/2026

ROUTE	STATE
K	MO
DISTRICT	SHEET NO.
BR	3

COUNTY
KNOX

JOB NO.
JNE0156

CONTRACT ID.

PROJECT NO.

BRIDGE NO.
A9721

DESCRIPTION

DATE

MISSOURI HIGHWAYS AND TRANSPORTATION COMMISSION
105 WEST CAPITOL
JEFFERSON CITY, MO 65102
1-888-ASK-MODOT (1-888-275-6636)

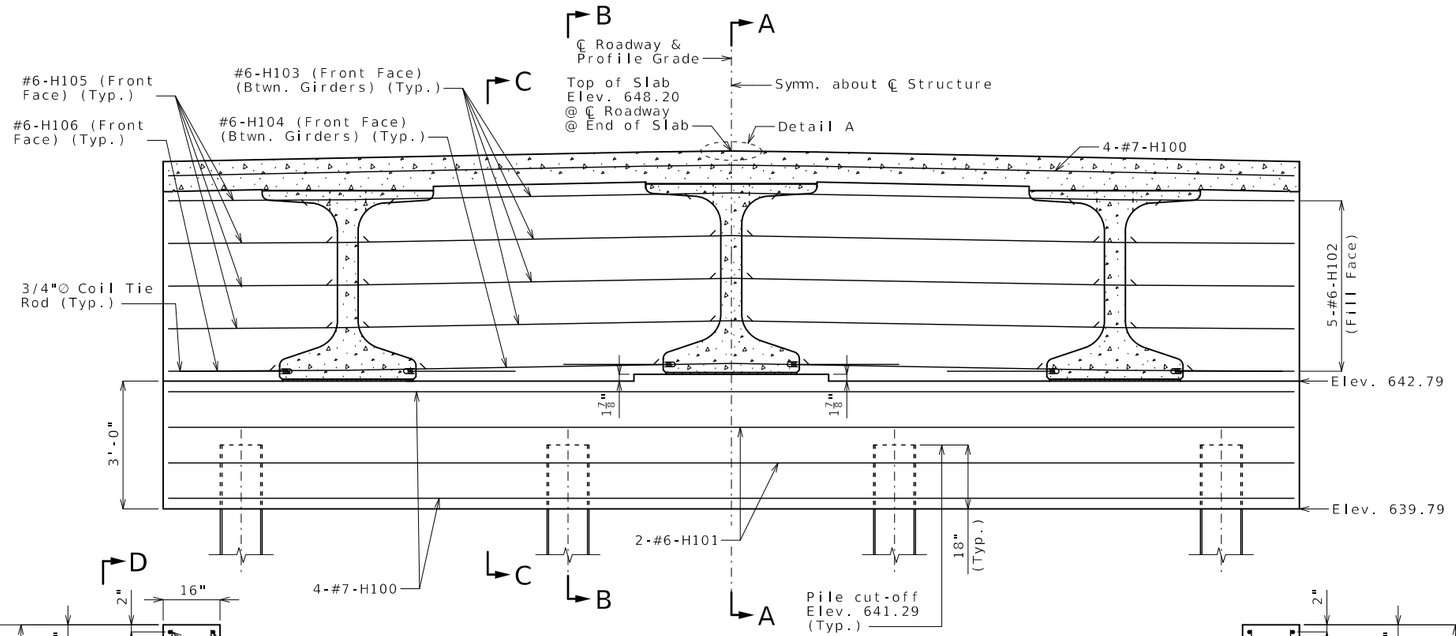

SECTION NEAR END BENT
(Keys not shown for clarity)

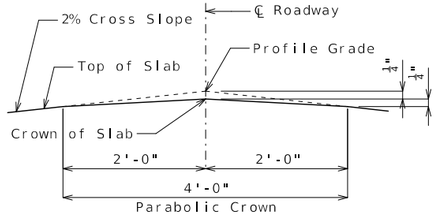

DETAIL A

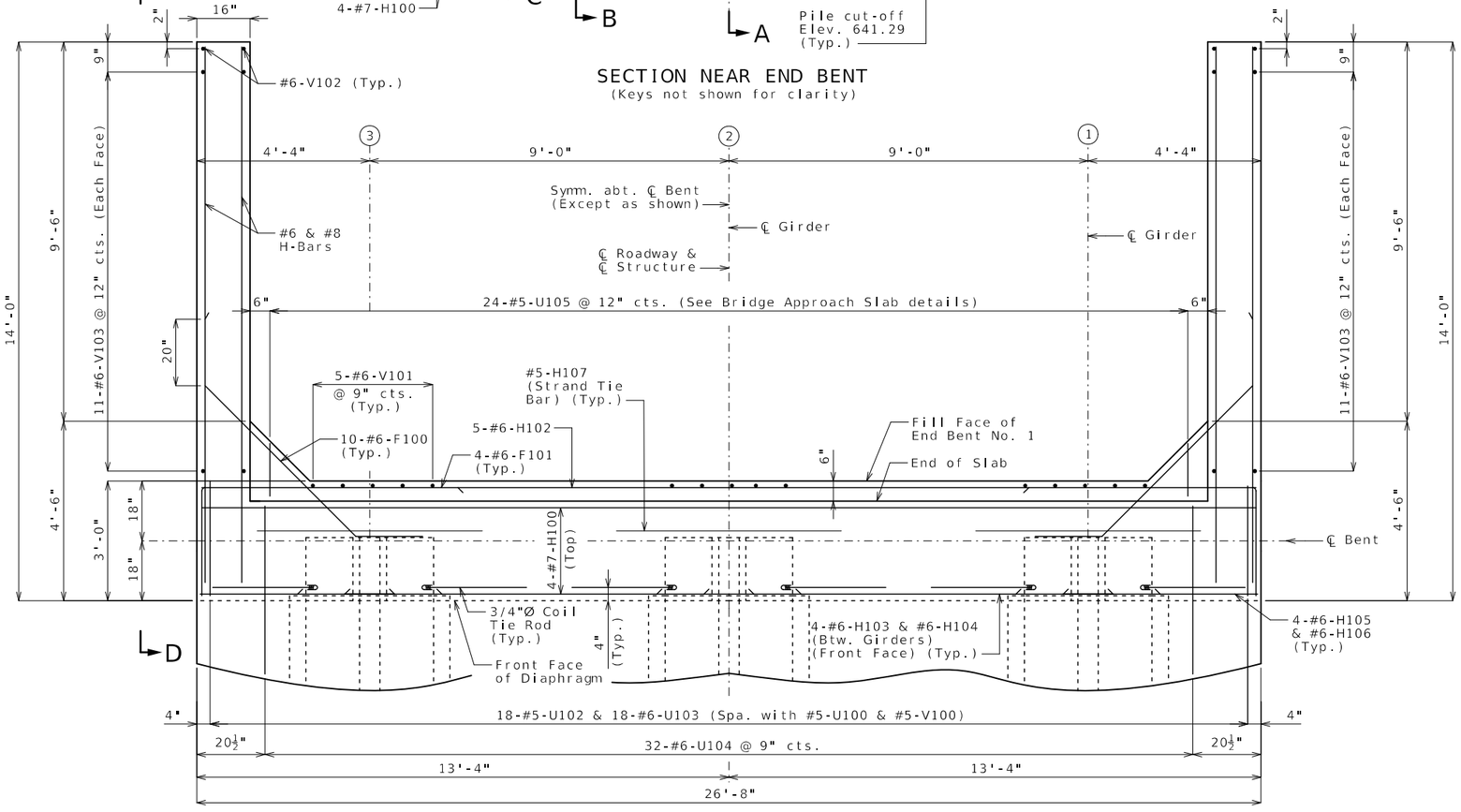

PART PLAN

END BENT NO. 1

Notes:

Work this sheet with Sheets No. 3 & 5.

All concrete in the end bent above top of beam and below top of slab shall be Class B-2.

Strands at end of girders shall be field bent or, if necessary, cut in field to maintain 1 1/2-inch minimum clearance to fill face of end bent.

For location of Coil Ties & #5-H108 (Strand Tie Bars), see Sheets No. 15 & 16.

The #6-F100 bars shall be bent in field to clear girders.

For details of bridge approach slab, see Sheet No. 28.

Detailed Mar. 2026
Checked May 2026

Note: This drawing is not to scale. Follow dimensions.

STATE OF MISSOURI
TIMOTHY D. LEAF
NUMBER PE-2012000778
PROFESSIONAL ENGINEER
10/06/2026 3:20:44 PM
TIMOTHY D. LEAF - CIVIL
MO-PE-2012000778

DATE PREPARED
10/6/2026

ROUTE	STATE
K	MO
DISTRICT	SHEET NO.
BR	4

COUNTY
KNOX

JOB NO.
JNE0156

CONTRACT ID.

PROJECT NO.

BRIDGE NO.
A9721

DESCRIPTION	DATE

MISSOURI HIGHWAYS AND TRANSPORTATION COMMISSION
105 WEST CAPITOL
JEFFERSON CITY, MO 65102
1-888-ASK-MODOT (1-888-275-6636)

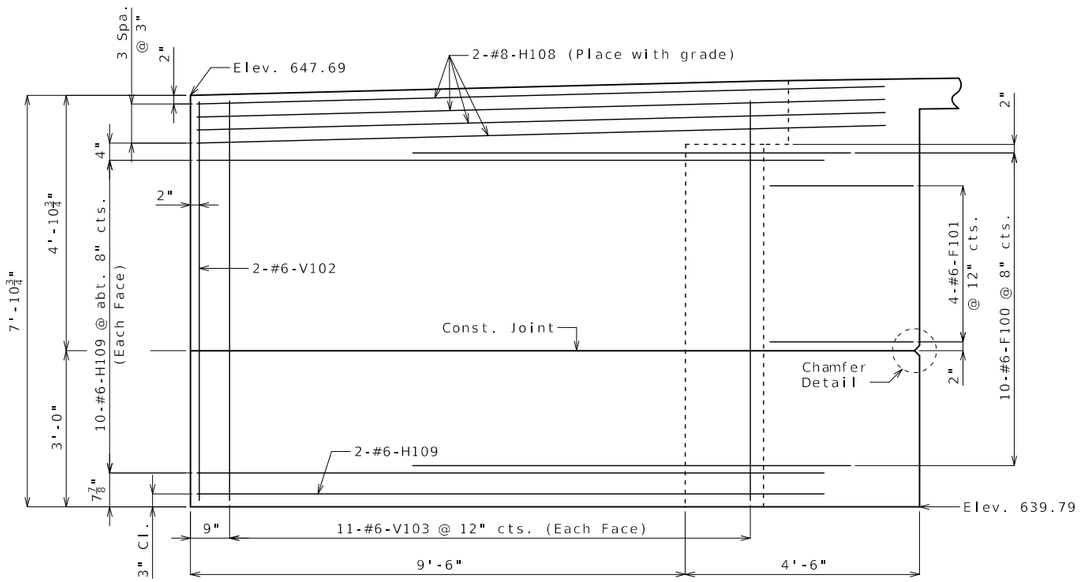

ELEVATION D-D

Left wing shown, right wing similar by 180° rotation.

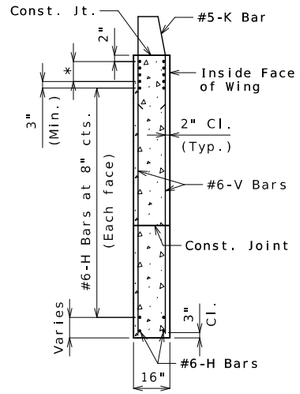

TYPICAL SECTION THRU WING

* #8-H Bars at 3" cts. (Each face)(Place with grade)

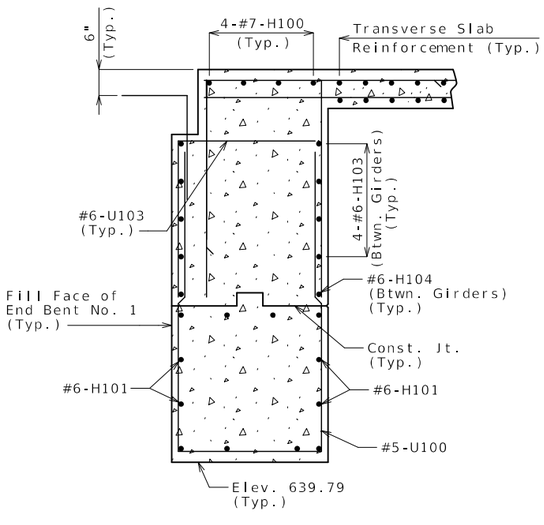

SECTION C-C

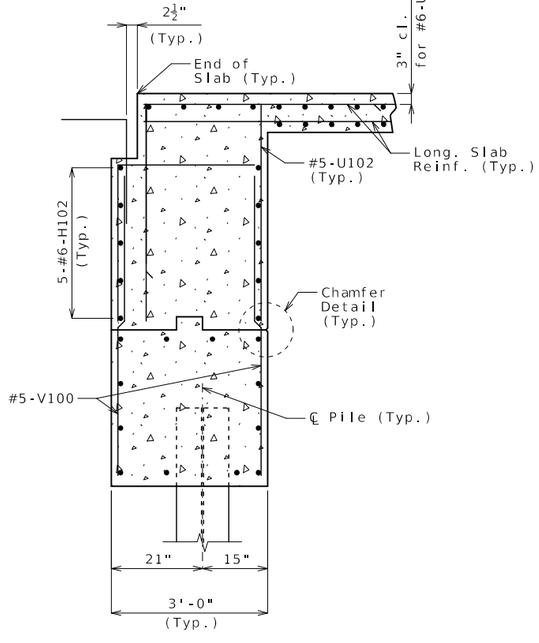

SECTION B-B

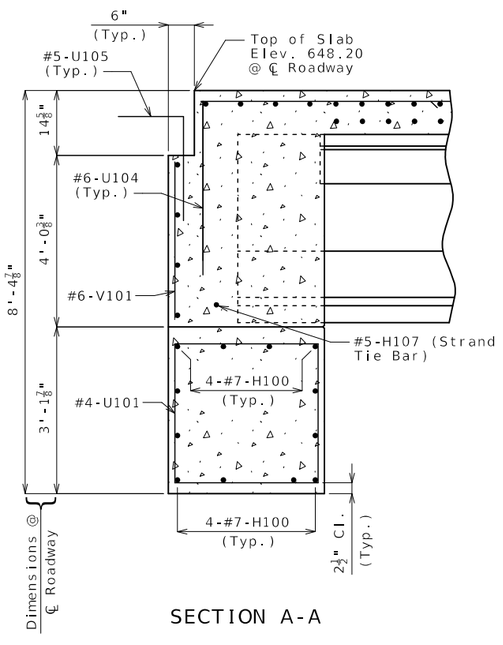

SECTION A-A

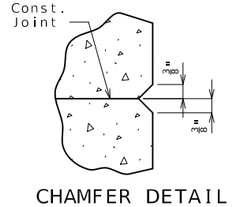

CHAMFER DETAIL

Notes:

For reinforcement of the barrier, see Sheets No. 26 & 27.

Work this sheet with Sheets No. 3 & 4.

END BENT NO. 1

Detailed Mar. 2026
Checked May 2026

Note: This drawing is not to scale. Follow dimensions.

STATE OF MISSOURI
TIMOTHY D. LEAF
NUMBER PE-2012000778
PROFESSIONAL ENGINEER
10/06/2026 3:20:54 PM
TIMOTHY D. LEAF - CIVIL
MO-PE-2012000778

DATE PREPARED
10/6/2026

ROUTE	STATE
K	MO
DISTRICT	SHEET NO.
BR	5

COUNTY
KNOX

JOB NO.
JNE0156

CONTRACT ID.

PROJECT NO.

BRIDGE NO.
A9721

DATE	DESCRIPTION

MISSOURI HIGHWAYS AND TRANSPORTATION COMMISSION
105 WEST CAPITOL
JEFFERSON CITY, MO 65102
1-888-ASK-MODOT (1-888-275-6636)

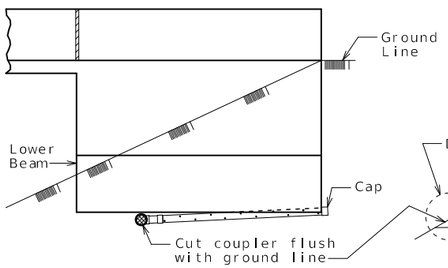

ELEVATION OF WING

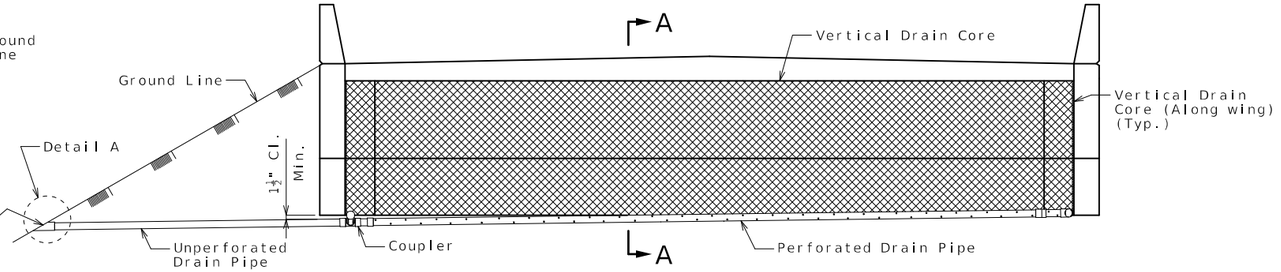

ELEVATION OF END BENT

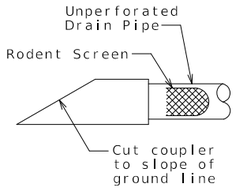

DETAIL A

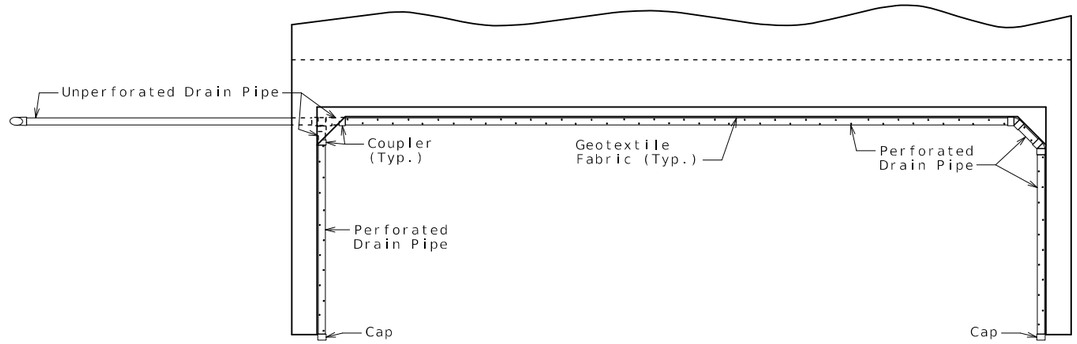

PLAN OF END BENT

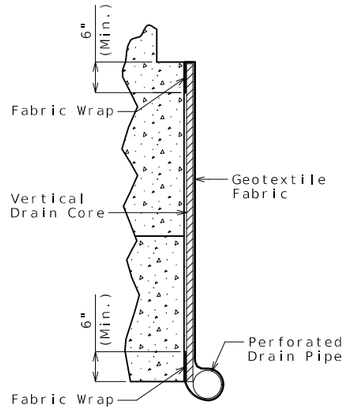

PART SECTION A-A
(Section thru wing similar)

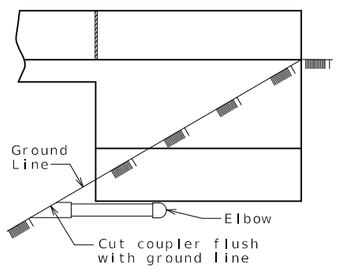

ELEVATION OF WING

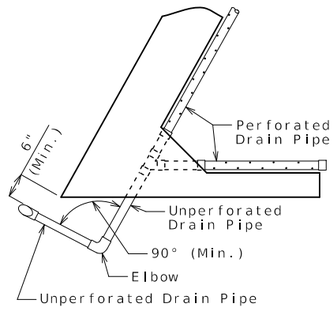

PART PLAN

OPTIONAL TURNED DRAIN
(Use only when straight drain is not practical.)

General Notes:

All drain pipe shall be sloped 1 to 2 percent.

Drain pipe may be either 6-inch diameter corrugated metallic-coated steel pipe underdrain, 4-inch diameter corrugated polyvinyl chloride (PVC) drain pipe, or 4-inch diameter corrugated polyethylene (PE) drain pipe.

Drain pipe shall be placed at fill face of end bent and inside face of wings. The pipe shall slope to lowest grade of ground line, also missing the lower beam of end bent by a minimum of 1 1/2 inches.

Perforated pipe shall be placed at fill face side and inside face of wings at the bottom of end bent and plain pipe shall be used where the vertical drain ends to the exit at ground line.

VERTICAL DRAIN AT END BENTS

STATE OF MISSOURI
TIMOTHY D. LEAF
NUMBER PE-2012000778
PROFESSIONAL ENGINEER
10/06/2026 3:21:05 PM
TIMOTHY D. LEAF - CIVIL
MO-PE-2012000778

DATE PREPARED: 10/6/2026
ROUTE: K | STATE: MO
DISTRICT: BR | SHEET NO.: 6
COUNTY: KNOX
JOB NO.: JNE0156
CONTRACT ID.:
PROJECT NO.:
BRIDGE NO.: A9721

DESCRIPTION | DATE

MISSOURI HIGHWAYS AND TRANSPORTATION COMMISSION
105 WEST CAPITOL
JEFFERSON CITY, MO 65102
1-888-ASK-MODOT (1-888-275-6636)

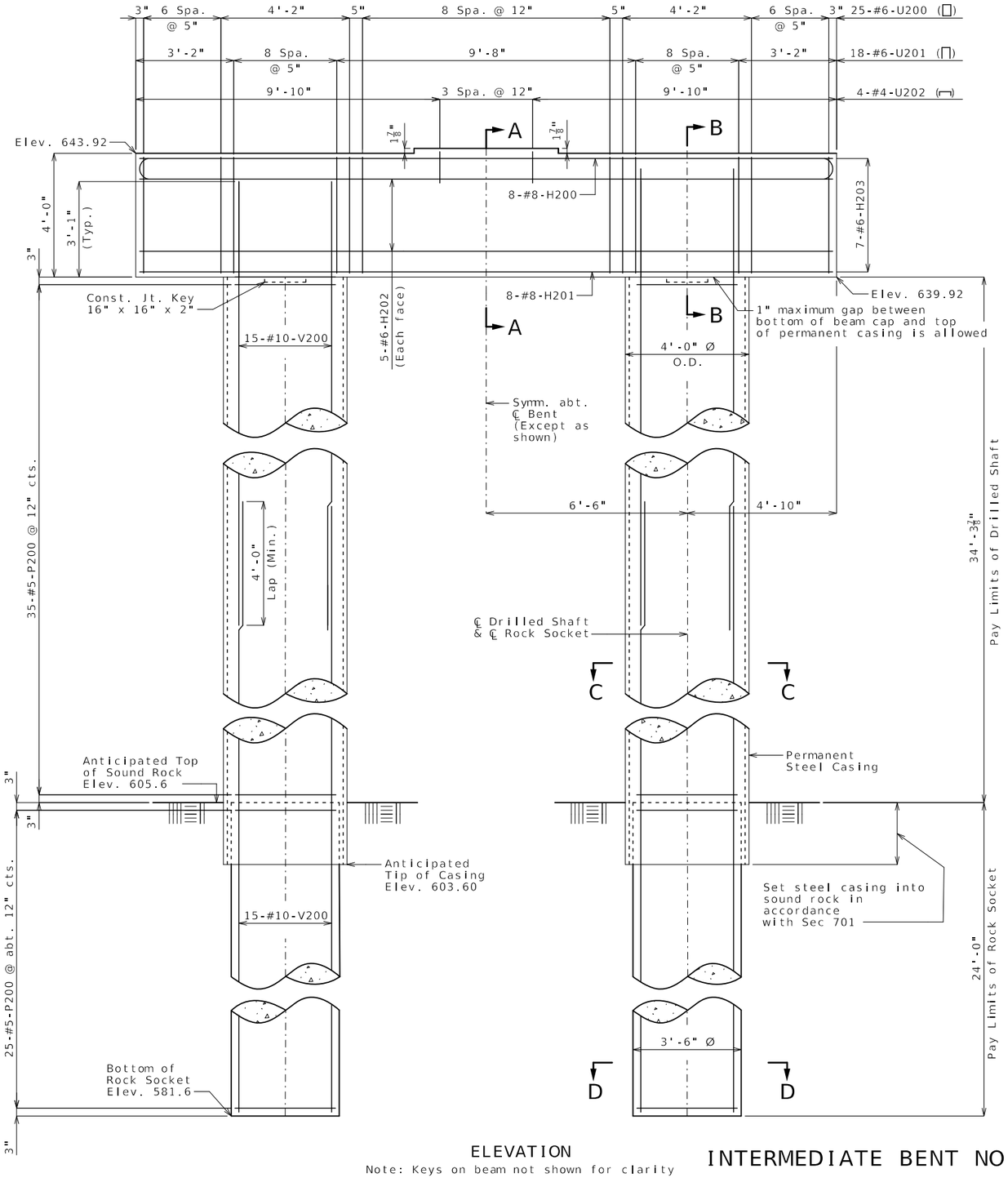

ELEVATION

Note: Keys on beam not shown for clarity

INTERMEDIATE BENT NO. 2

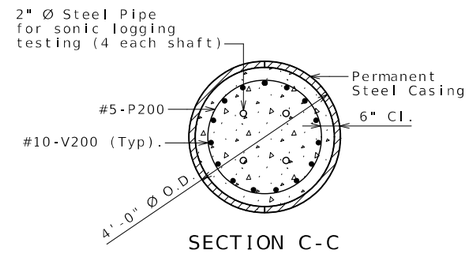

SECTION C-C

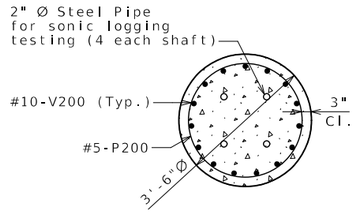

SECTION D-D

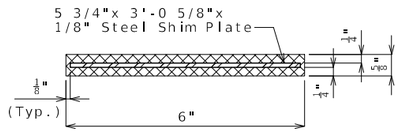

TYPICAL SECTION THRU LAMINATED NEOPRENE BEARING PAD

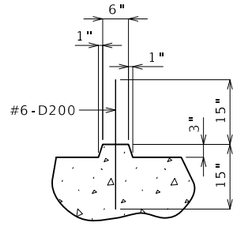

SECTION THRU KEY

Substructure Quantity Table for Bent No. 2		
Item		Quantity
Drilled Shaft (4 ft. 0 in. Dia.)	linear foot	68.7
Rock Socket (3 ft. 6 in. Dia.)	linear foot	48.0
Video Camera Inspection	each	2
Foundation Inspection Holes	linear foot	68.0
Sonic Logging Testing	each	2
Class B Concrete (Substructure)	cu. yard	15.3
Reinforcing Steel (Bridges)	pound	13,330

These quantities are included in the Estimated Quantities table on Sheet No. 2.

Notes:

Work this sheet with Sheet No. 8.

Thickness of permanent steel casing shall be in accordance with Sec 701.

An additional 4 feet has been added to V-bar lengths and additional P200 bars have been added in the quantities, if required, for possible change in drilled shaft or rock socket length. The additional V-bar length shall be cut off or included in the reinforcement lap if not required. The additional P bars shall be spaced similarly to that shown in elevation, if required, or to a lesser spacing if not required but not less than 6-inch centers.

Sonic logging testing shall be performed on all drilled shafts and rock sockets.

All reinforcement in drilled shafts and rock sockets is included in the substructure quantities.

STATE OF MISSOURI
TIMOTHY D. LEAF
NUMBER PE-2012000778
PROFESSIONAL ENGINEER
10/06/2026 3:21:15 PM
TIMOTHY D. LEAF - CIVIL
MO-PE-2012000778

DATE PREPARED
10/6/2026

ROUTE	STATE
K	MO
DISTRICT	SHEET NO.
BR	7

COUNTY
KNOX

JOB NO.
JNE0156

CONTRACT ID.

PROJECT NO.

BRIDGE NO.
A9721

DATE	DESCRIPTION

MISSOURI HIGHWAYS AND TRANSPORTATION COMMISSION
105 WEST CAPITOL
JEFFERSON CITY, MO 65102
1-888-ASK-MODOT (1-888-275-6636)

Detailed Jun. 2026
Checked Jul. 2026

Note: This drawing is not to scale. Follow dimensions.

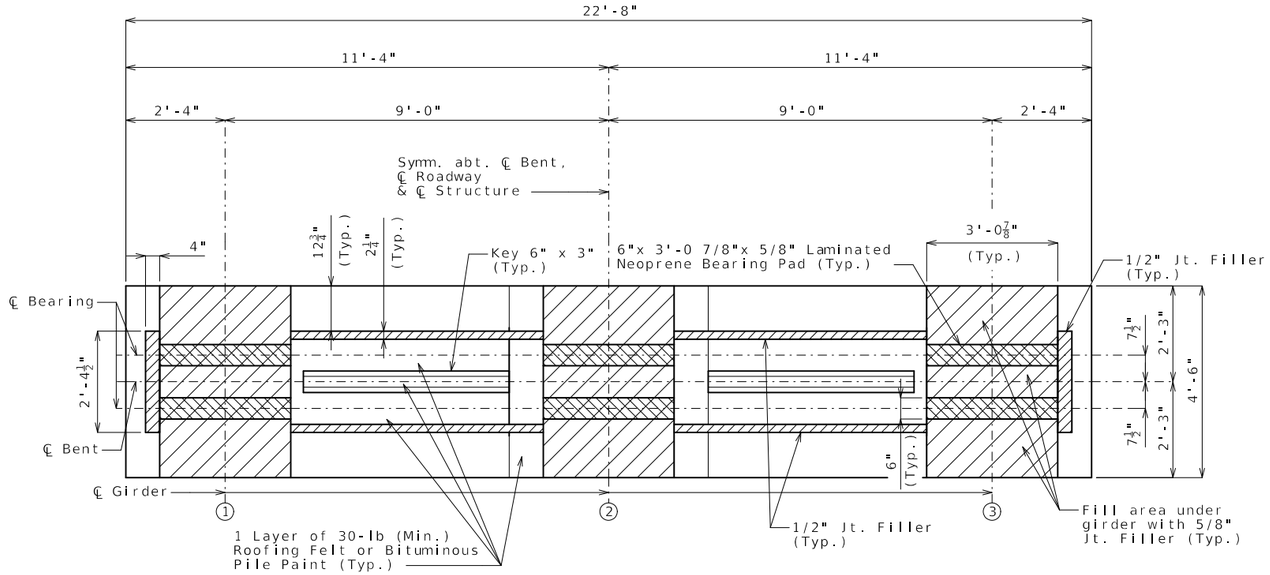

PLAN OF BEAM

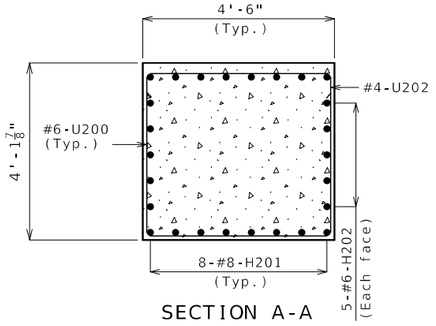

SECTION A-A

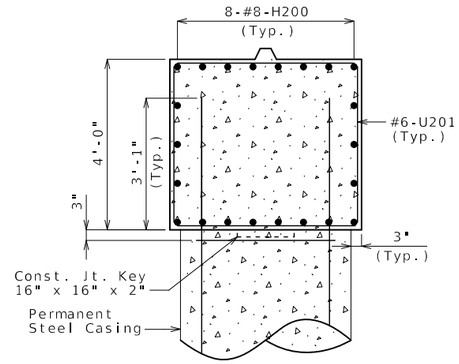

SECTION B-B

Allowable gap between concrete beam cap and permanent steel casing not shown for clarity

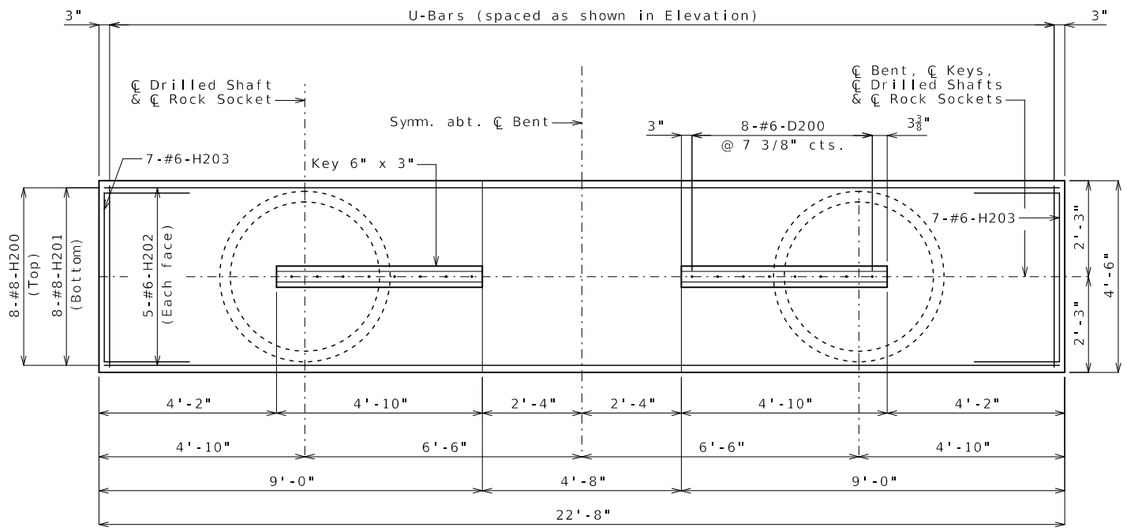

PLAN OF BEAM SHOWING REINFORCEMENT

INTERMEDIATE BENT NO. 2

Note:

Work this sheet with Sheet No. 7.

Detailed Jun. 2026
Checked Jul. 2026

Note: This drawing is not to scale. Follow dimensions.

STATE OF MISSOURI
TIMOTHY D. LEAF
NUMBER PE-2012000778
PROFESSIONAL ENGINEER
10/06/2026 3:21:23 PM
TIMOTHY D. LEAF - CIVIL
MO-PE-2012000778

DATE PREPARED
10/6/2026

ROUTE	STATE
K	MO
DISTRICT	SHEET NO.
BR	8

COUNTY
KNOX

JOB NO.
JNE0156

CONTRACT ID.

PROJECT NO.

BRIDGE NO.
A9721

DESCRIPTION	DATE

MISSOURI HIGHWAYS AND TRANSPORTATION COMMISSION
105 WEST CAPITOL
JEFFERSON CITY, MO 65102
1-888-ASK-MODOT (1-888-275-6636)

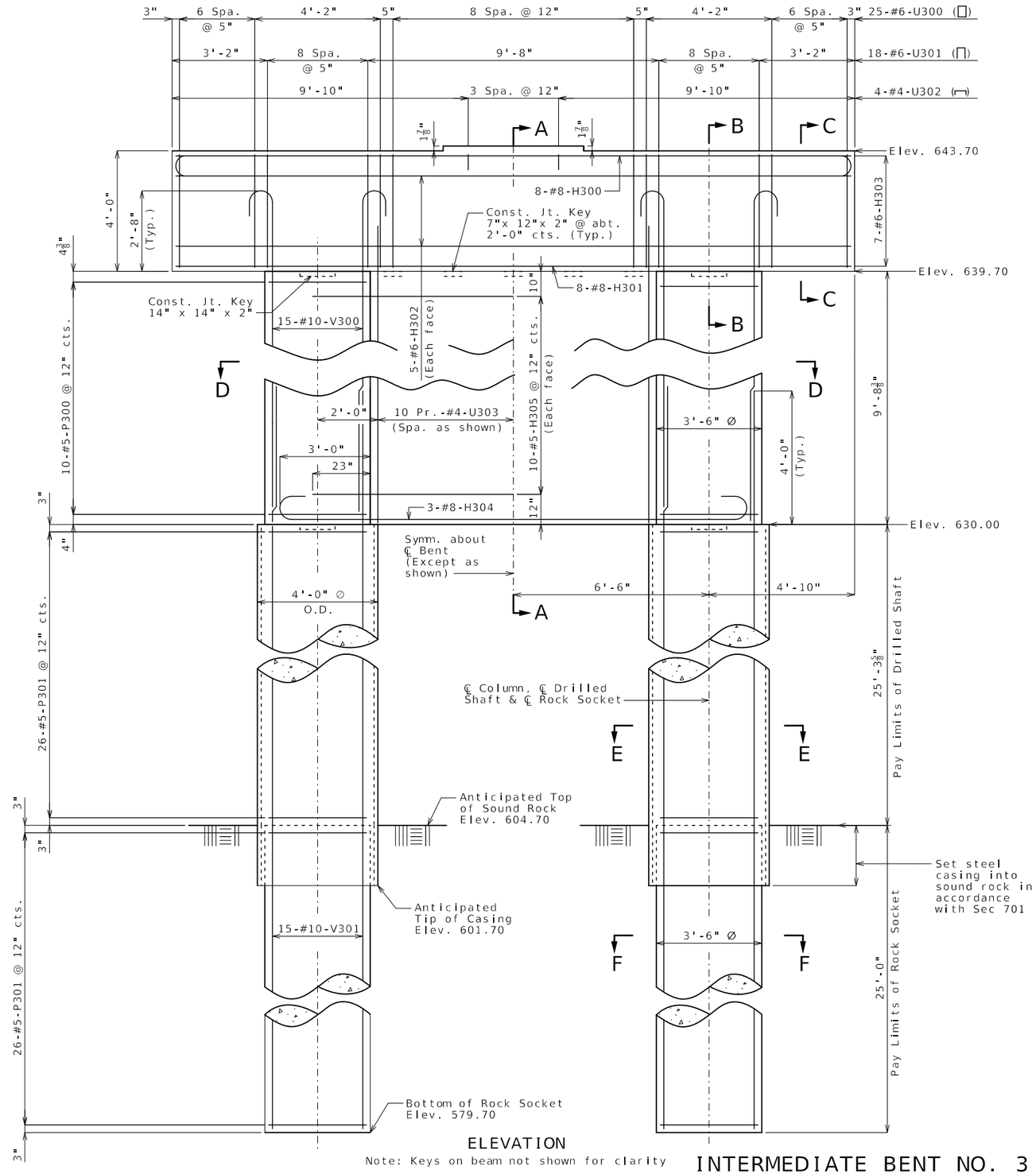

ELEVATION

Note: Keys on beam not shown for clarity

INTERMEDIATE BENT NO. 3

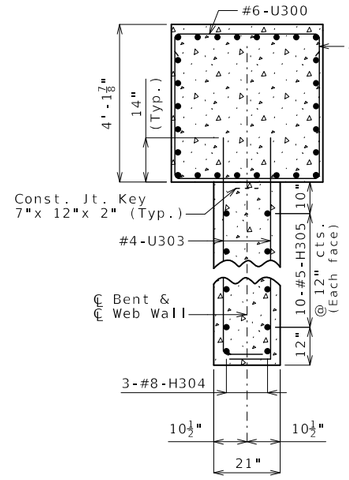

SECTION A-A

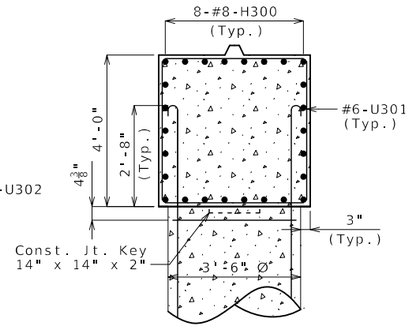

SECTION B-B

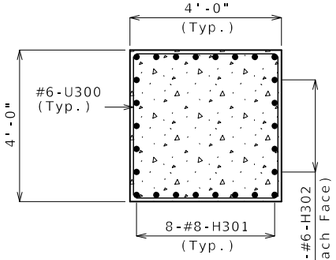

SECTION C-C

Substructure Quantity Table for Bent No. 3		
Item		Quantity
Drilled Shaft (4 ft. 0 in. Dia.)	linear foot	50.7
Rock Socket (3 ft. 6 in. Dia.)	linear foot	50.0
Video Camera Inspection	each	2
Foundation Inspection Holes	linear foot	70.0
Sonic Logging Testing	each	2
Class B Concrete (Substructure)	cu. yard	26.8
Reinforcing Steel (Bridges)	pound	13,430

These quantities are included in the Estimated Quantities table on Sheet No. 2.

Notes:

Work this sheet with Sheet No. 10.

Thickness of permanent steel casing shall be in accordance with Sec 701.

An additional 4 feet has been added to V301 bar lengths and additional P301 bars have been added in the quantities, if required, for possible change in drilled shaft or rock socket length. The additional V-bar length shall be cut off or included in the reinforcement lap if not required. The additional P bars shall be spaced similarly to that shown in elevation, if required, or to a lesser spacing if not required but not less than 6-inch centers.

At the contractor's option, the hooks of vertical bars embedded in the beam cap may be oriented inward or outward.

Sonic logging testing shall be performed on all drilled shafts and rock sockets.

All reinforcement in drilled shafts and rock sockets is included in the substructure quantities.

STATE OF MISSOURI
TIMOTHY D. LEAF
NUMBER PE-2012000778
PROFESSIONAL ENGINEER
10/06/2026 3:21:34 PM
TIMOTHY D. LEAF - CIVIL
MO-PE-2012000778

DATE PREPARED
10/6/2026

ROUTE	STATE
K	MO
DISTRICT	SHEET NO.
BR	9

COUNTY
KNOX

JOB NO.
JNE0156

CONTRACT ID.

PROJECT NO.

BRIDGE NO.
A9721

DESCRIPTION	DATE

MISSOURI HIGHWAYS AND TRANSPORTATION COMMISSION
105 WEST CAPITOL
JEFFERSON CITY, MO 65102
1-888-ASK-MODOT (1-888-275-6636)

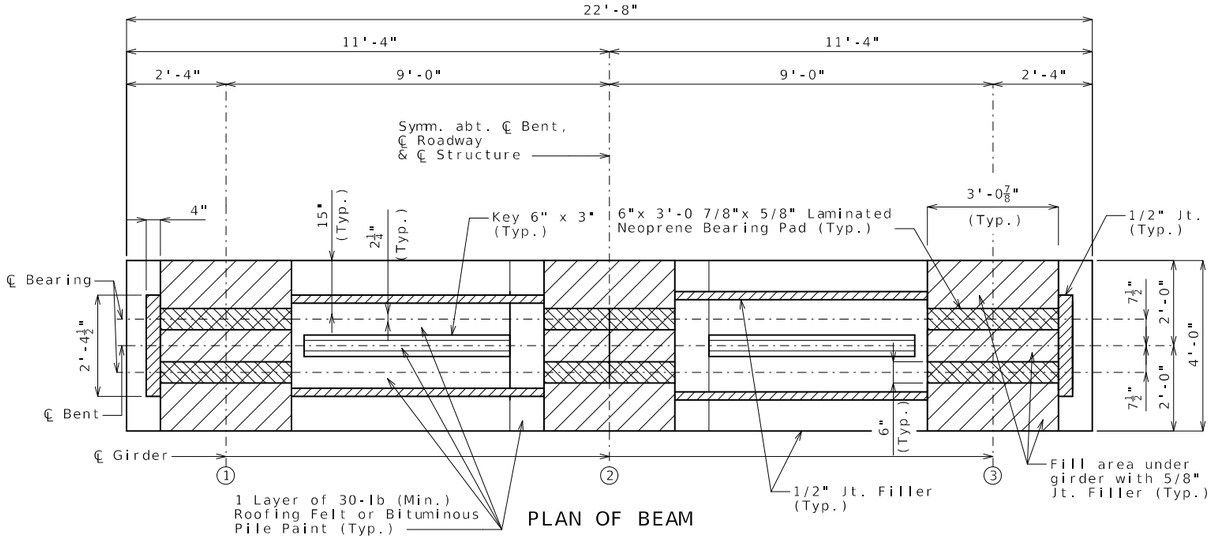

PLAN OF BEAM

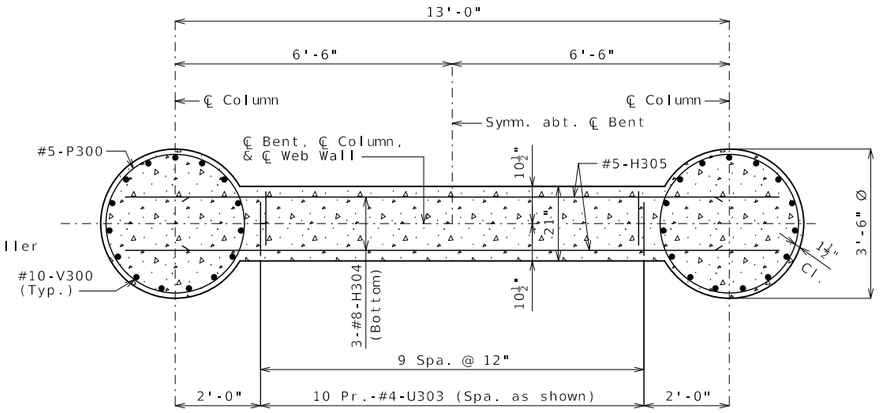

SECTION D-D

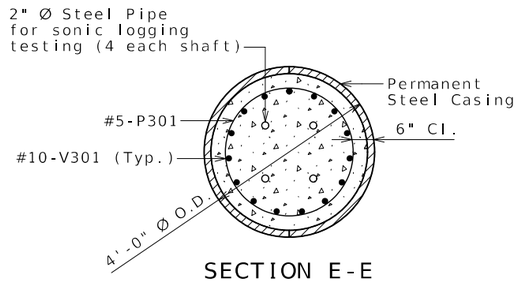

SECTION E-E

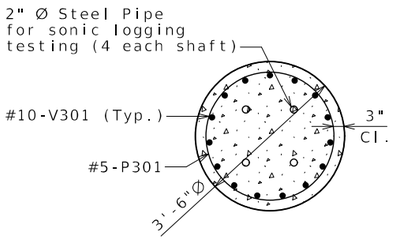

SECTION F-F

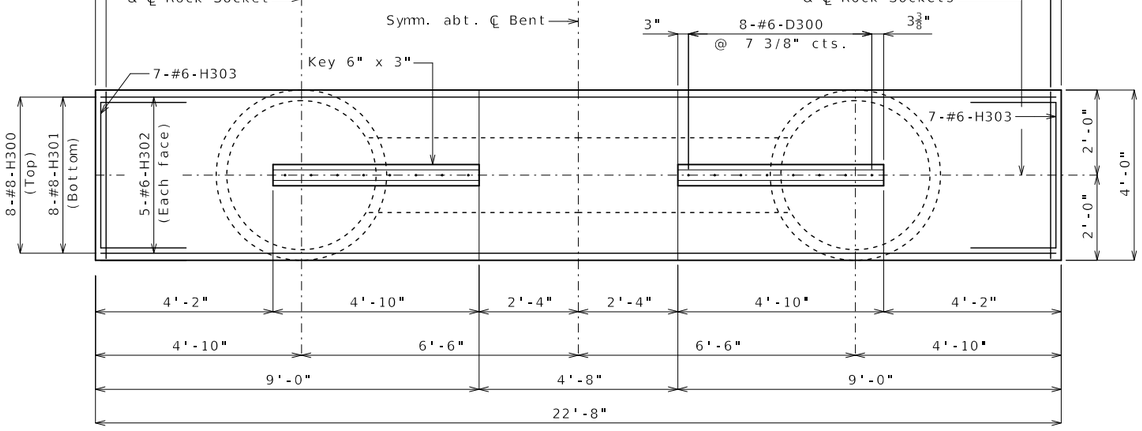

PLAN OF BEAM SHOWING REINFORCEMENT

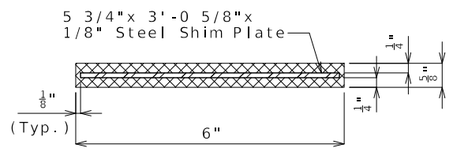

TYPICAL SECTION
THRU LAMINATED
NEOPRENE BEARING PAD

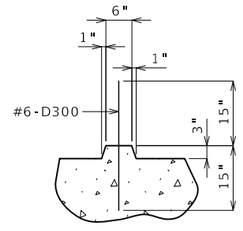

SECTION THRU KEY

INTERMEDIATE BENT NO. 3

Note:
Work this sheet with Sheet No. 9.

Detailed Jun. 2026
Checked Jul. 2026

Note: This drawing is not to scale. Follow dimensions.

STATE OF MISSOURI
TIMOTHY D. LEAF
NUMBER PE-2012000778
PROFESSIONAL ENGINEER
10/06/2026 3:21:44 PM
TIMOTHY D. LEAF - CIVIL
MO-PE-2012000778

DATE PREPARED
10/6/2026

ROUTE	STATE
K	MO
DISTRICT	SHEET NO.
BR	10

COUNTY
KNOX

JOB NO.
JNE0156

CONTRACT ID.

PROJECT NO.

BRIDGE NO.
A9721

DESCRIPTION

DATE

MISSOURI HIGHWAYS AND TRANSPORTATION COMMISSION
105 WEST CAPITOL
JEFFERSON CITY, MO 65102
1-888-ASK-MODOT (1-888-275-6636)

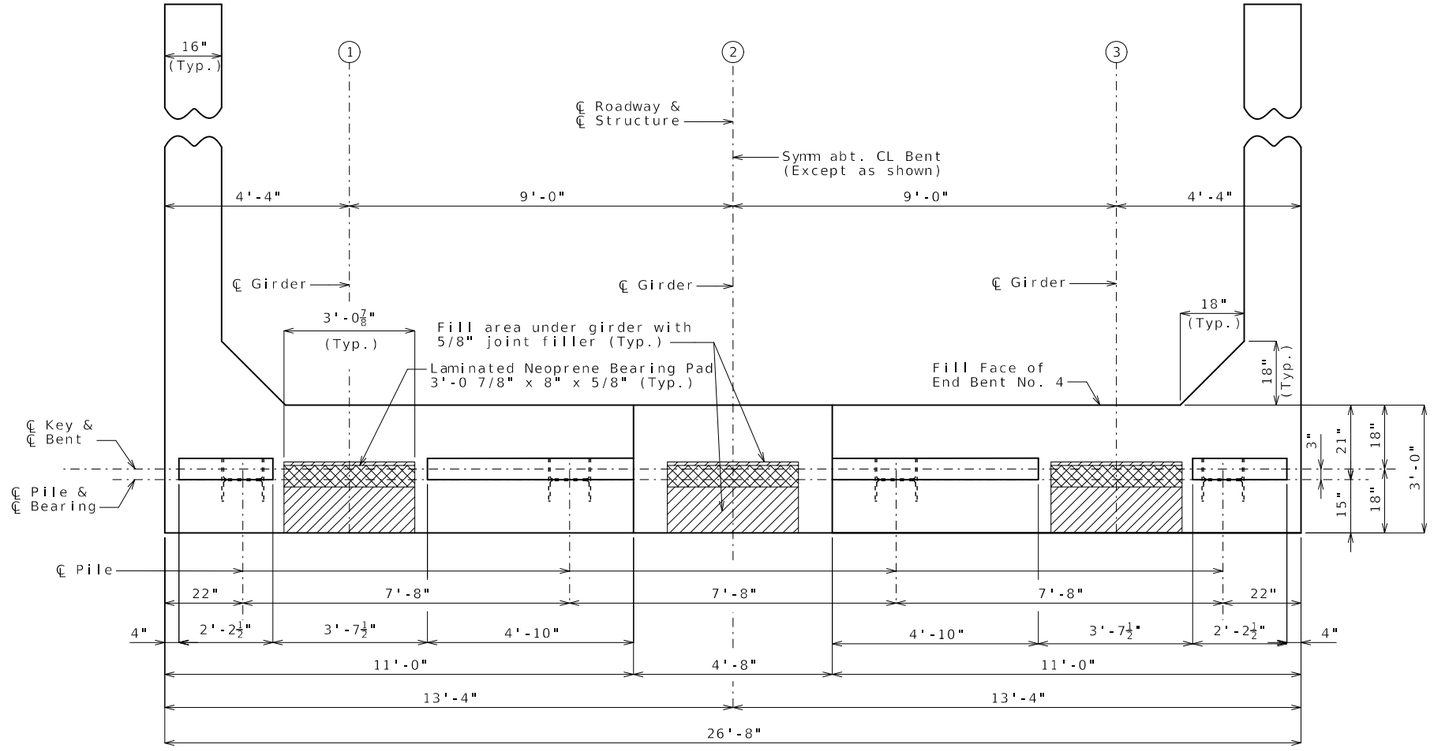

PLAN OF BEAM

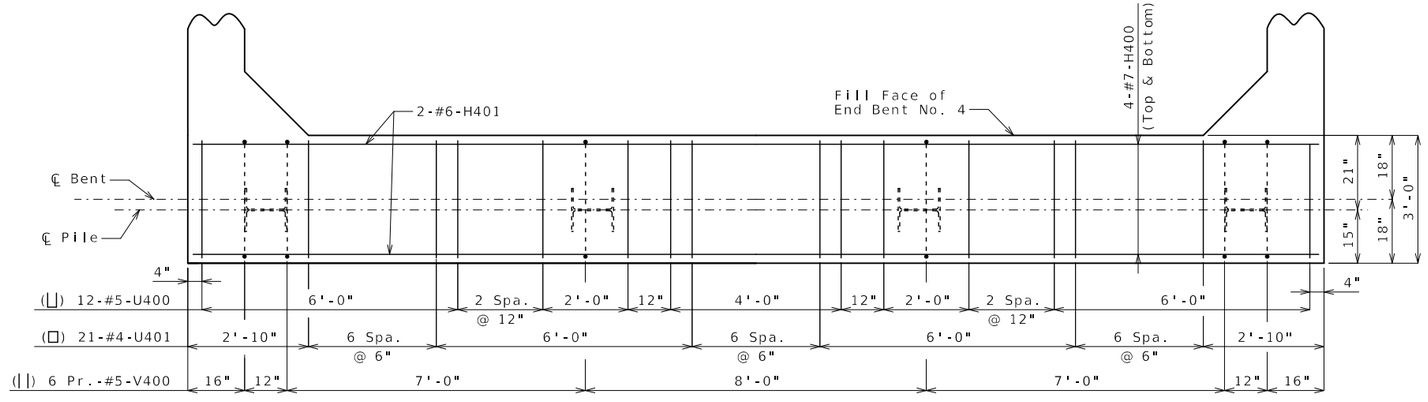

PLAN OF BEAM SHOWING REINFORCEMENT

(Steps & keys not shown for clarity)

Substructure Quantity Table for Bent No. 4		
Item		Quantity
Class 1 Excavation	cu. yard	45
Galvanized Structural Steel Piles (12 in.)	linear foot	160
Dynamic Pile Testing	each	1
Pre-Bore for Piling	linear foot	108
Pile Point Reinforcement	each	4
Class B Concrete (Substructure)	cu. yard	12.5

These quantities are included in the Estimated Quantities table on Sheet No. 2.

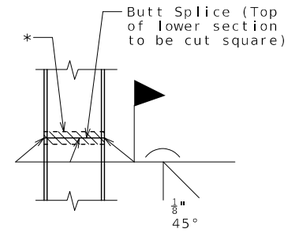

STEEL PILE SPLICE

(If required)

* Galvanizing material shall be omitted or removed one inch clear of weld locations in accordance with Sec 702.

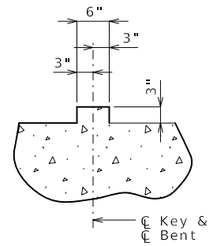

SECTION THRU KEY

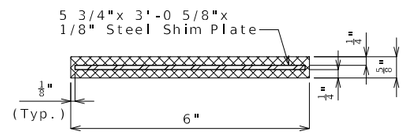

TYPICAL SECTION THRU LAMINATED NEOPRENE BEARING PAD

Notes:

Work this sheet with Sheets No. 12 & 13.

Reinforcing steel shall be shifted to clear piles. U bars shall clear piles by at least 1 1/2 inches.

For details of vertical drain at end bent, see Sheet No. 6.

END BENT NO. 4

Detailed Feb. 2026
Checked May 2026

Note: This drawing is not to scale. Follow dimensions.

STATE OF MISSOURI
TIMOTHY D. LEAF
NUMBER PE-2012000778
PROFESSIONAL ENGINEER
10/06/2026 3:24:04 PM
TIMOTHY D. LEAF - CIVIL
MO-PE-2012000778

DATE PREPARED: 10/6/2026

ROUTE	STATE
K	MO
DISTRICT	SHEET NO.
BR	11

COUNTY: KNOX
JOB NO.: JNE0156
CONTRACT ID.:
PROJECT NO.:
BRIDGE NO.: A9721

DESCRIPTION | DATE

MISSOURI HIGHWAYS AND TRANSPORTATION COMMISSION
105 WEST CAPITOL
JEFFERSON CITY, MO 65102
1-888-ASK-MODOT (1-888-275-6636)

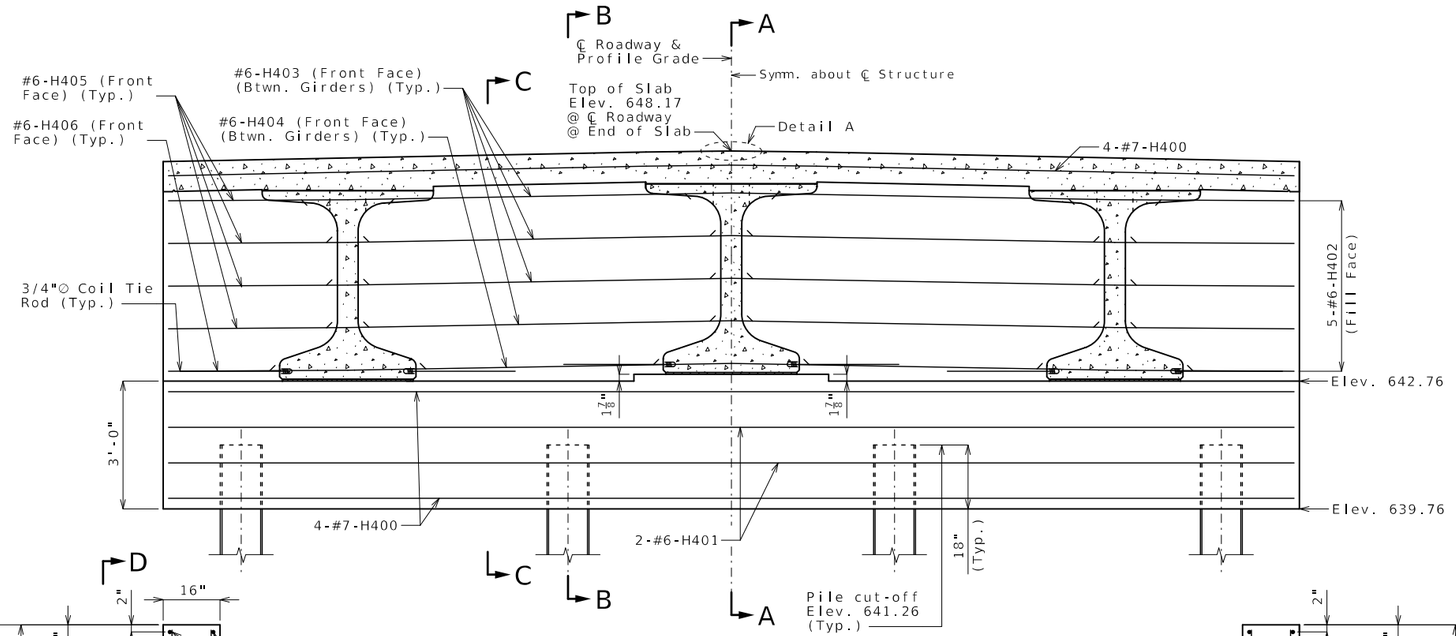

SECTION NEAR END BENT
(Keys not shown for clarity)

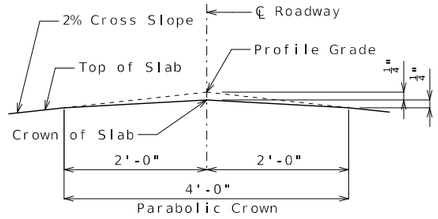

DETAIL A

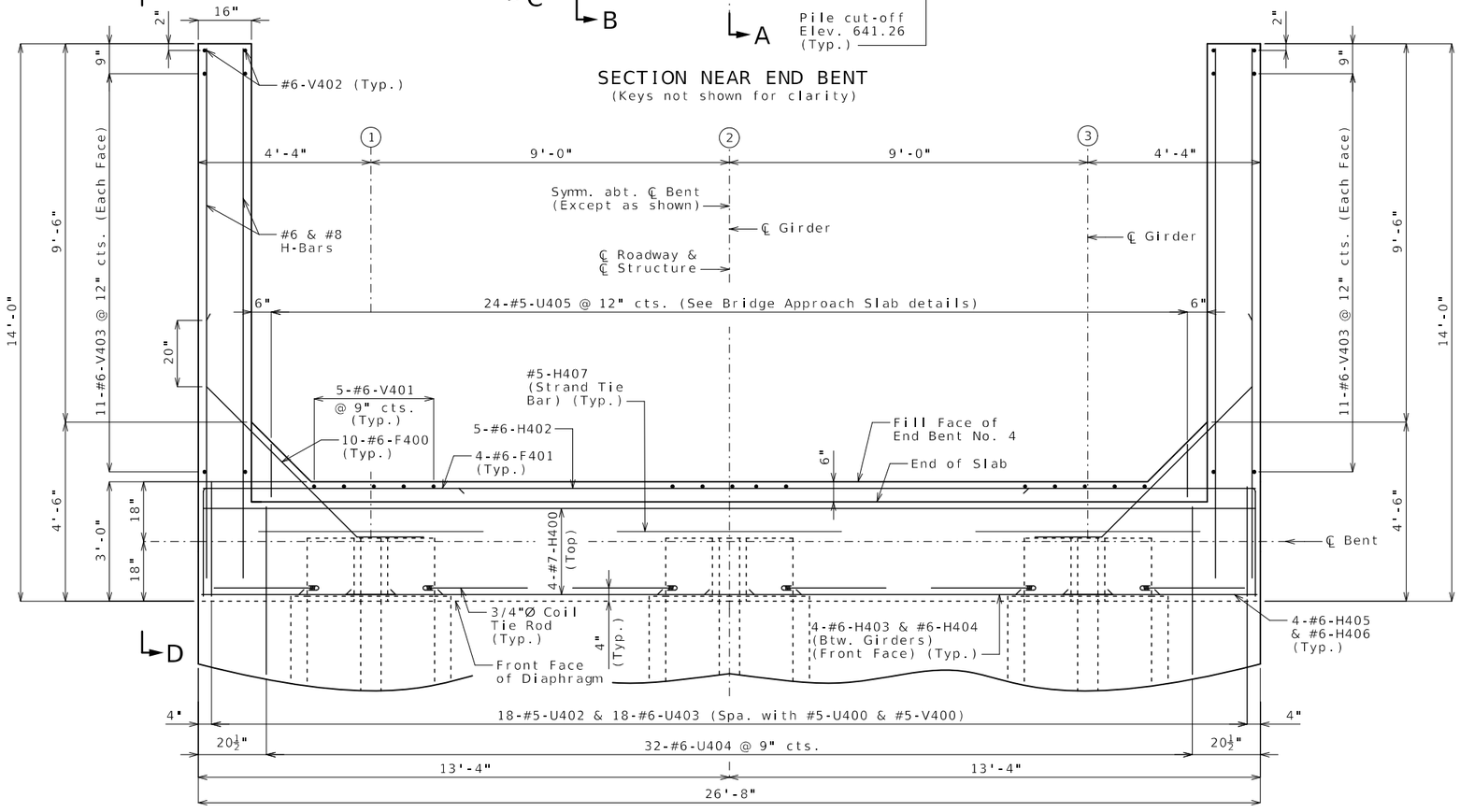

PART PLAN

END BENT NO. 4

Notes:

Work this sheet with Sheets No. 11 & 13.

All concrete in the end bent above top of beam and below top of slab shall be Class B-2.

Strands at end of girders shall be field bent or, if necessary, cut in field to maintain 1 1/2-inch minimum clearance to fill face of end bent.

For location of Coil Ties & #5-H408 (Strand Tie Bars), see Sheets No. 15 & 16.

The #6-F400 bars shall be bent in field to clear girders.

For details of bridge approach slab, see Sheet No. 28.

Detailed Mar. 2026
Checked May 2026

Note: This drawing is not to scale. Follow dimensions.

STATE OF MISSOURI
TIMOTHY D. LEAF
NUMBER PE-2012000778
PROFESSIONAL ENGINEER
10/06/2026 3:24:16 PM
TIMOTHY D. LEAF - CIVIL
MO-PE-2012000778

DATE PREPARED
10/6/2026

ROUTE	STATE
K	MO
DISTRICT	SHEET NO.
BR	12

COUNTY
KNOX

JOB NO.
JNE0156

CONTRACT ID.

PROJECT NO.

BRIDGE NO.
A9721

DESCRIPTION	DATE

MISSOURI HIGHWAYS AND TRANSPORTATION COMMISSION
105 WEST CAPITOL
JEFFERSON CITY, MO 65102
1-888-ASK-MODOT (1-888-275-6636)

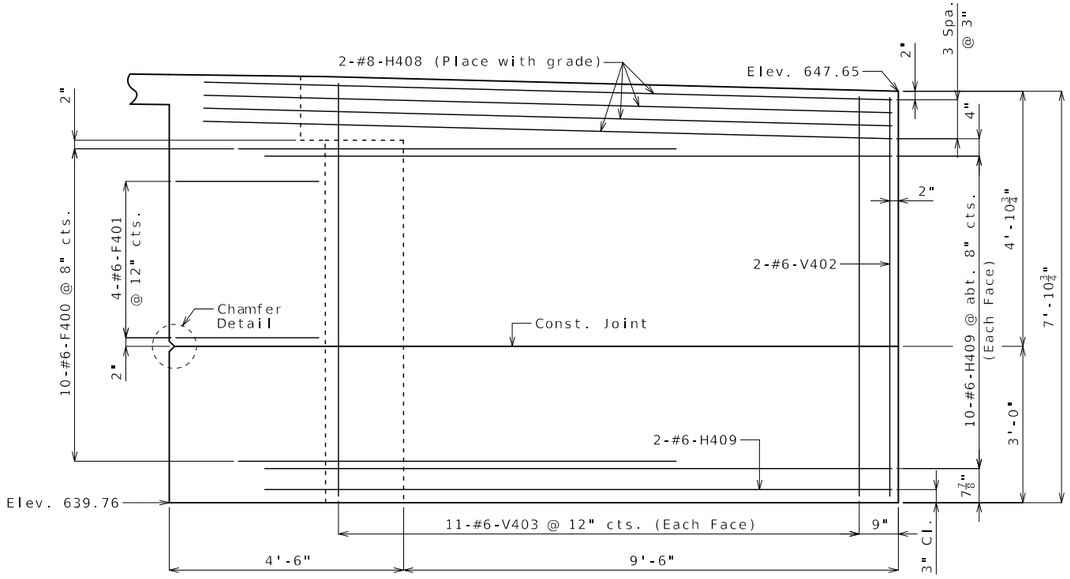

ELEVATION D-D

Right wing shown, left wing similar by 180° rotation

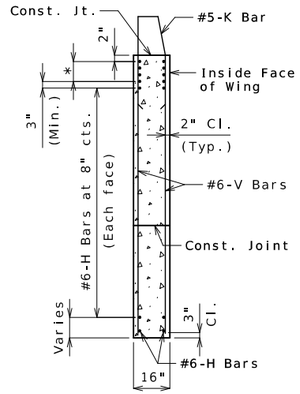

TYPICAL SECTION THRU WING

* #8-H Bars at 3" cts. (Each face)(Place with grade)

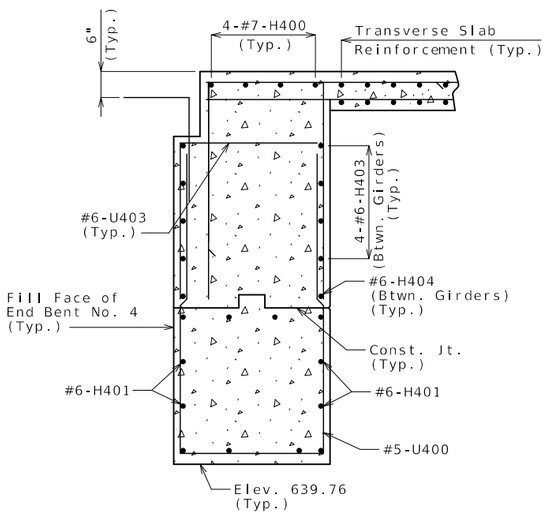

SECTION C-C

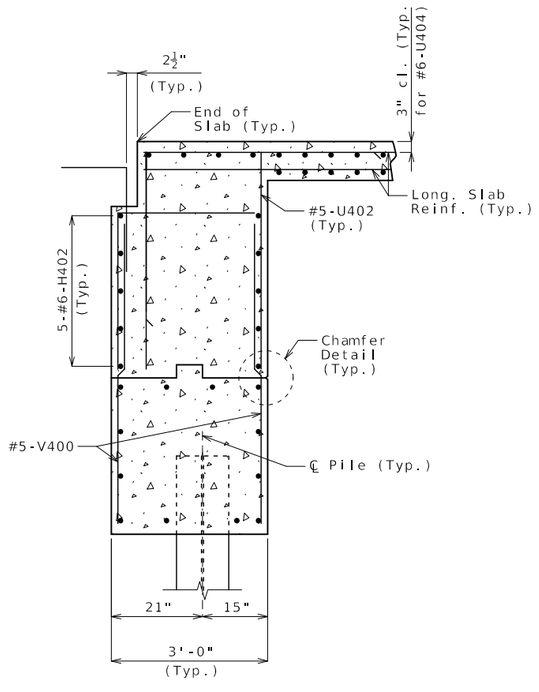

SECTION B-B

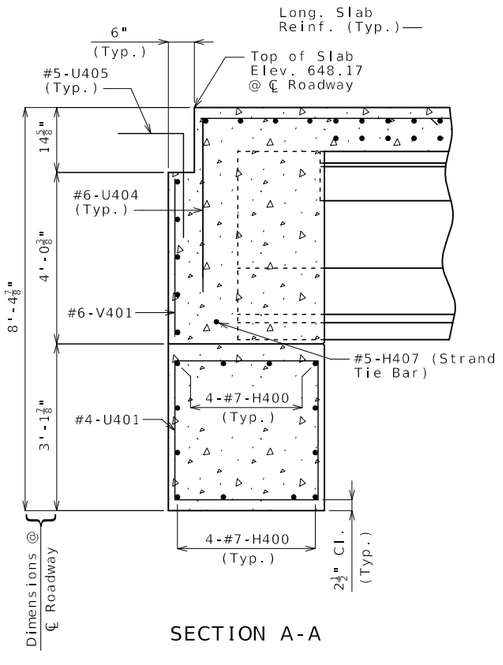

SECTION A-A

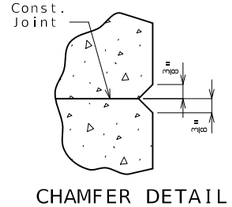

CHAMFER DETAIL

Notes:

For reinforcement of the barrier, see Sheets No. 26 & 27.

Work this sheet with Sheets No. 11 & 12.

END BENT NO. 4

Detailed May 2026
Checked Jul. 2026

Note: This drawing is not to scale. Follow dimensions.

STATE OF MISSOURI
TIMOTHY D. LEAF
NUMBER PE-2012000778
PROFESSIONAL ENGINEER
10/06/2026 3:24:31 PM
TIMOTHY D. LEAF - CIVIL
MO-PE-2012000778

DATE PREPARED: 10/6/2026

ROUTE	STATE
K	MO
DISTRICT	SHEET NO.
BR	13

COUNTY: KNOX
JOB NO.: JNE0156
CONTRACT ID.:
PROJECT NO.:
BRIDGE NO.: A9721

DESCRIPTION	DATE

MISSOURI HIGHWAYS AND TRANSPORTATION COMMISSION
105 WEST CAPITOL
JEFFERSON CITY, MO 65102
1-888-ASK-MODOT (1-888-275-6636)

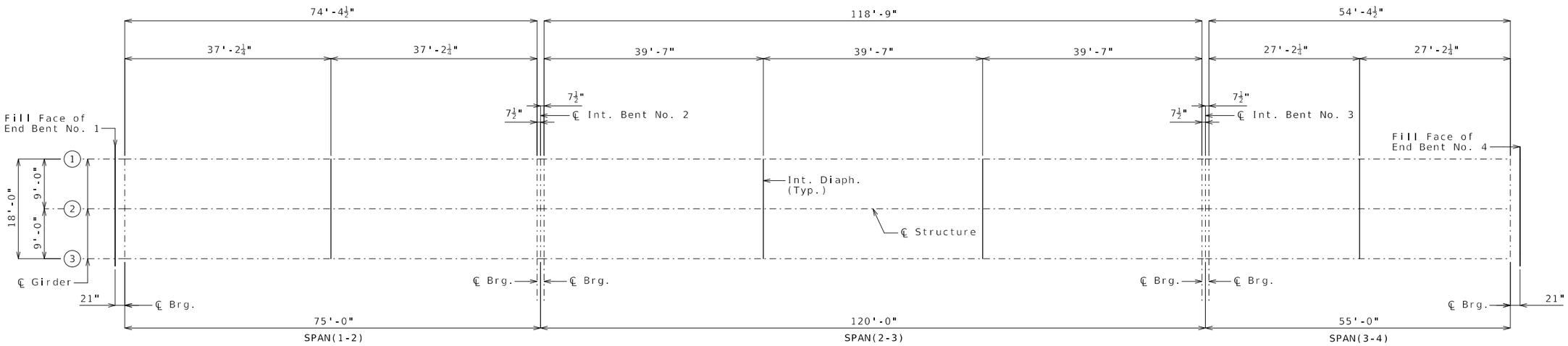

PLAN SHOWING LOCATION OF STEEL INTERMEDIATE DIAPHRAGMS

Longitudinal dimensions are horizontal.

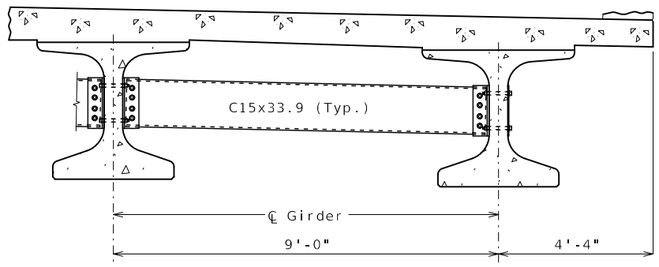

PART SECTION SHOWING INTERMEDIATE DIAPHRAGMS

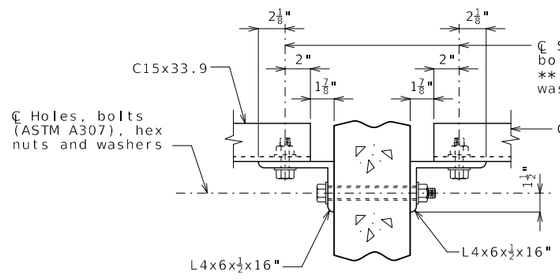

SECTION C-C

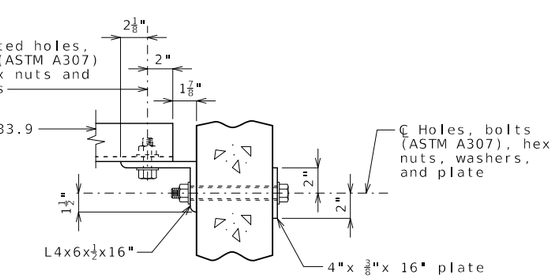

SECTION D-D

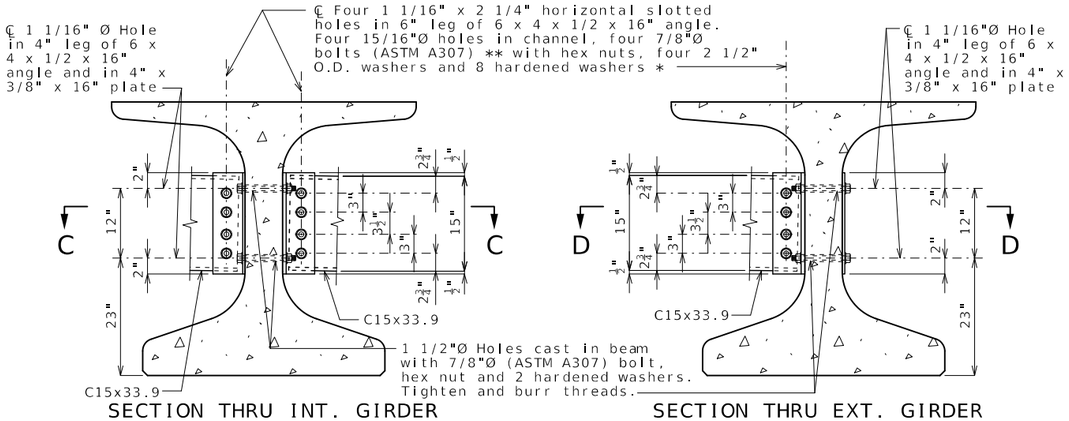

SECTION THRU INT. GIRDER AT DIAPHRAGM

SECTION THRU EXT. GIRDER AT DIAPHRAGM

STEEL DIAPHRAGM NOTES:

* In lieu of 2 1/2" outside diameter washers, contractor may substitute a 3/16" (Min. thickness) plate with four 15/16" Ø holes and one hardened washer per bolt.

** Bolts shall be tightened to provide a tension of one-half that specified in Sec 712 for high strength bolt installation. ASTM F3125 Grade A325 Type 1 bolts may be substituted for and installed in accordance with the requirements for the specified ASTM A307 bolts.

All diaphragm materials including bolts, nuts, and washers shall be galvanized.

Fabricated structural steel shall be ASTM A709 Grade 36 except as noted.

Payment for furnishing and installing steel intermediate diaphragms will be considered completely covered by the contract unit price for Steel Intermediate Diaphragm for P/S Concrete Girders.

Shop drawings will not be required for steel intermediate diaphragms and angle connections.

STEEL INTERMEDIATE DIAPHRAGMS

Detailed Feb. 2026
Checked May 2026

Note: This drawing is not to scale. Follow dimensions.

STATE OF MISSOURI
TIMOTHY D. LEAF
NUMBER PE-2012000778
PROFESSIONAL ENGINEER
10/06/2026 3:24:44 PM
TIMOTHY D. LEAF - CIVIL
MO-PE-2012000778

DATE PREPARED: 10/6/2026
ROUTE: K
STATE: MO
DISTRICT: BR
SHEET NO.: 14
COUNTY: KNOX
JOB NO.: JNE0156
CONTRACT ID.:
PROJECT NO.:
BRIDGE NO.: A9721

DESCRIPTION	DATE

MISSOURI HIGHWAYS AND TRANSPORTATION COMMISSION
105 WEST CAPITOL
JEFFERSON CITY, MO 65102
1-888-ASK-MODOT (1-888-275-6636)

(1) Fabricator shall apply a bond breaker to this region excluding where joint filler will be applied.

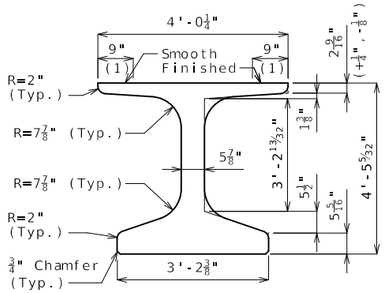

DIMENSIONS

(2) Outer strands tensioned to 2.02 kips/strand and inner strands to 8 kips/strand. Placed symmetrical about ℄ Girder. May be moved laterally in pairs.

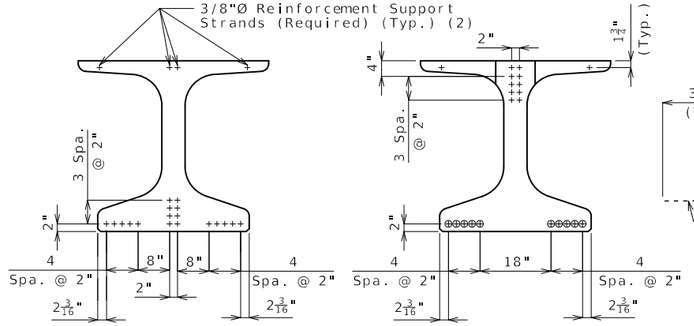

℄ GIRDER END OF GIRDER

STRAND ARRANGEMENT

\+ Indicates prestressing strand.

o Indicates cut & shop bend with 3'-0" projection.

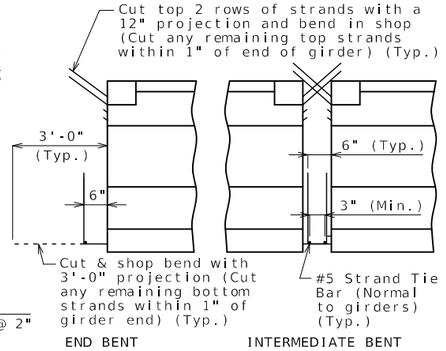

END BENT INTERMEDIATE BENT

STRANDS AT GIRDER ENDS

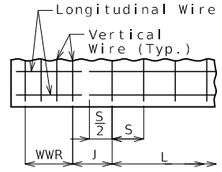

WELDED WIRE PLACEMENT

S = Vertical wire spacing

L = Length of WWR mats

J = Distance between WWR mats

Bill of Reinforcing Steel

Bars Each Girder

No.	Size/Mark	Length	Shape
96	3 G1	2'-10"	8
2	4 G3	3'-10"	20

Welded Wire Each Girder

Mark	Size	S	W	L	J
WWR1	D31	4"	W12	5'-4"	4"
WWR2	D31	12"	W12	15'-0"	12"
WWR3	D31	24"	W12	14'-0"	--
WWR6	D31	2"	W12	16"	4½"

Bending Diagrams

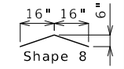

Shape 20

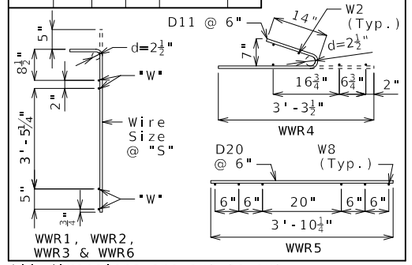

All dimensions are out to out.

Hooks and bends shall be in accordance with the CRSI Manual of Standard Practice for Detailing Reinforced Concrete Structures, Stirrup and Tie Dimensions.

Actual bar lengths are measured along centerline of bar to the nearest inch.

Minimum clearance to reinforcing shall be 1", unless otherwise shown.

All bar reinforcement shall be ASTM A615 or A706 Grade 60.

WWR shall not be epoxy coated.

G4 and G5 not required for interior girders. G3 not required for exterior girders of intermediate spans. Half no. of G3, G4, and G5 not required for ext. girders of end spans.

General Notes:

Concrete for prestressed beams shall be Class A-1 with f'c = 8000 psi and f'ci = 6500 psi.

Use 18 strands, 0.6"Ø Grade 270, with an initial prestress force of 791 kips.

Pretensioned members shall be in accordance with Sec 1029.

Fabricator shall be responsible for location and design of lifting devices.

Exterior and interior girders are the same except: coil ties, top flange blockout, coil inserts for slab drains, holes for steel intermediate diaphragms.

For Girder Camber Diagram, see Sheet No. 23.

The 1 1/2"Ø holes shall be cast in the web for steel intermediate diaphragms. Drilling is not allowed. For location of holes and details of steel intermediate diaphragms, see Sheet No. 14.

For location of coil inserts at slab drains, see Sheet No. 22.

For location of coil ties at concrete diaphragms and integral bents, see Sheets No. 4 and 21.

Alternate bar reinforcing steel details are provided and may be used. The same type of reinforcing steel shall be used for all girders in all spans.

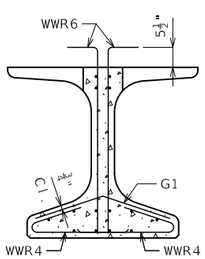

SECTION A-A

Strands not shown for clarity.

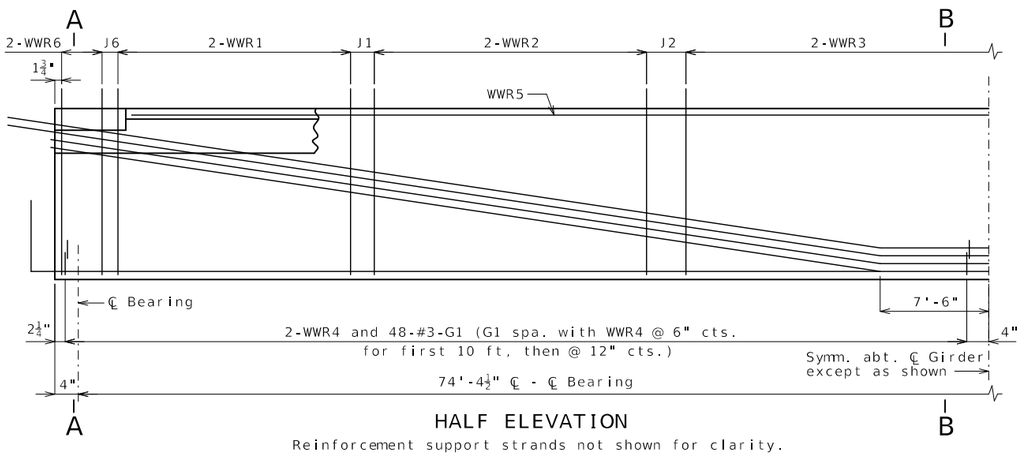

HALF ELEVATION

Reinforcement support strands not shown for clarity.

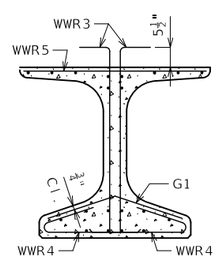

SECTION B-B

Strands not shown for clarity.

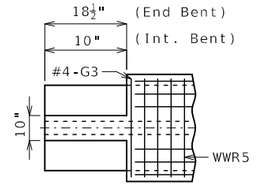

TOP FLANGE BLOCKOUT

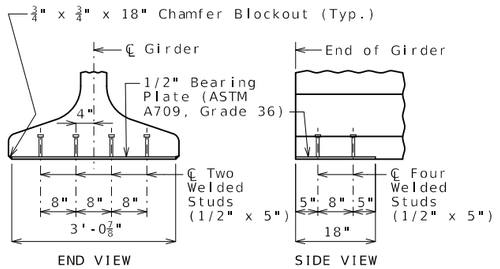

BEARING PLATE

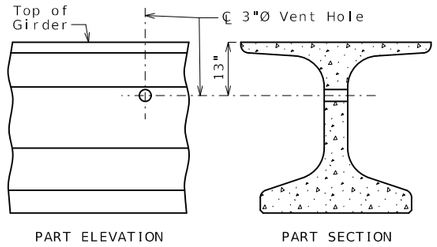

VENT HOLE

Place vent holes at or near upgrade 1/3 point of girders and clear reinforcing steel or strands by 1 1/2" minimum and steel intermediate diaphragm bolt connections by 6" minimum.

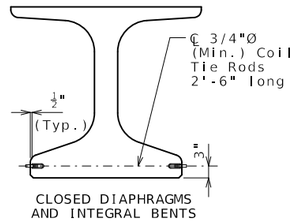

COIL TIES

Exclude coil tie at exterior face of exterior girders except at integral end bents.

NU-GIRDERS - SPAN (1-2)

Detailed Feb. 2026
Checked May 2026

Note: This drawing is not to scale. Follow dimensions.

STATE OF MISSOURI
TIMOTHY D. LEAF
NUMBER PE-2012000778
PROFESSIONAL ENGINEER
10/06/2026 3:25:00 PM
TIMOTHY D. LEAF - CIVIL
MO-PE-2012000778

DATE PREPARED
10/6/2026

ROUTE	STATE
K	MO
DISTRICT	SHEET NO.
BR	15

COUNTY
KNOX

JOB NO.
JNE0156

CONTRACT ID.

PROJECT NO.

BRIDGE NO.
A9721

DESCRIPTION

DATE

MISSOURI HIGHWAYS AND TRANSPORTATION COMMISSION

105 WEST CAPITOL
JEFFERSON CITY, MO 65102
1-888-ASK-MODOT (1-888-275-6636)

(1) Fabricator shall apply a bond breaker to this region excluding where joint filler will be applied.

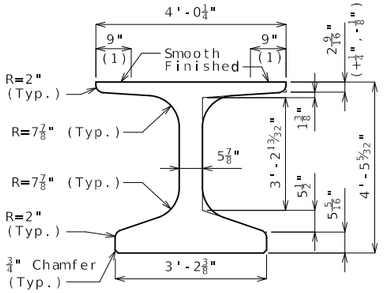

DIMENSIONS

(2) Outer strands tensioned to 2.02 kips/strand and inner strands to 8 kips/strand. Placed symmetrical about ℄ Girder. May be moved laterally in pairs.

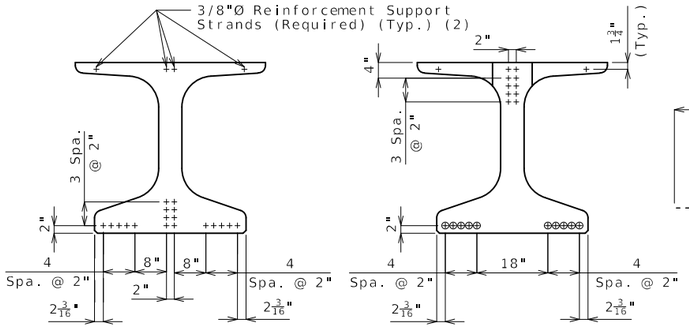

℄ GIRDER END OF GIRDER

STRAND ARRANGEMENT

\+ Indicates prestressing strand.

○ Indicates cut & shop bend with 3'-0" projection.

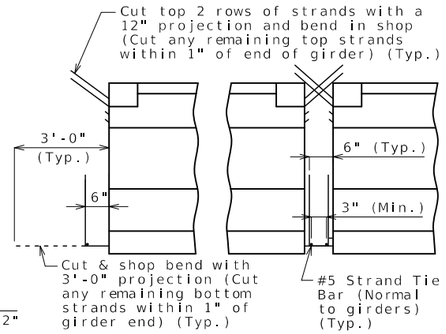

END BENT INTERMEDIATE BENT

STRANDS AT GIRDER ENDS

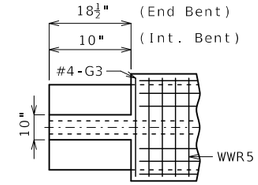

TOP FLANGE BLOCKOUT

Bill of Reinforcing Steel - Each Girder			
No.	Size/ Mark	Length	Shape
120	5 B1	5'-10"	11S
130	4 D1	4'-0"	9S
2	4 G3	3'-10"	20

Bending Diagrams

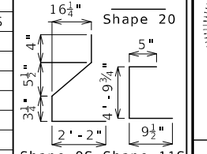

Welded Wire Reinforcement - Each Girder

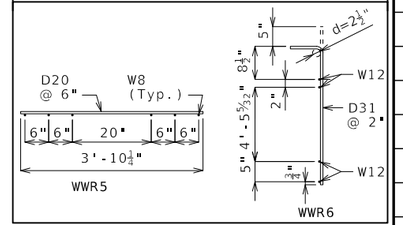

All dimensions are out to out.

Hooks and bends shall be in accordance with the CRSI Manual of Standard Practice for Detailing Reinforced Concrete Structures, Stirrup and Tie Dimensions.

Actual bar lengths are measured along centerline of bar to the nearest inch.

Minimum clearance to reinforcing shall be one inch.

All bar reinforcement shall be ASTM A615 or A706 Grade 60.

The two D1 bars may be furnished as one bar at the fabricator's option.

All B1 bars shall be epoxy coated.

G4 and G5 not required for interior girders. G3 not required for exterior girders of intermediate spans. Half no. of G3, G4, and G5 not required for ext. girders of end spans.

General Notes:

Concrete for prestressed girders shall be Class A-1 with f'c = 8000 psi and f'ci = 6500 psi.

Use 18 strands, 0.6"Ø Grade 270, with an initial prestress force of 791 kips.

Pretensioned members shall be in accordance with Sec 1029.

Fabricator shall be responsible for location and design of lifting devices.

Exterior and interior girders are the same except: coil ties, top flange blockout, coil inserts for slab drains, holes for steel intermediate diaphragms.

For Girder Camber Diagram, see Sheet No. 23.

The 1 1/2"Ø holes shall be cast in the web for steel intermediate diaphragms. Drilling is not allowed. For location of holes and details of steel intermediate diaphragms, see Sheet No. 14.

For location of coil inserts at slab drains, see Sheet No. 22.

For location of coil ties at concrete diaphragms and integral bents, see Sheets No. 4 and 21.

Alternate bar reinforcing steel details are provided and may be used. The same type of reinforcing steel shall be used for all girders in all spans.

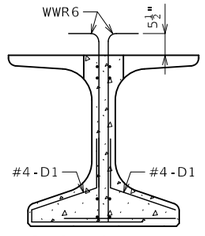

SECTION A-A

Strands not shown for clarity.

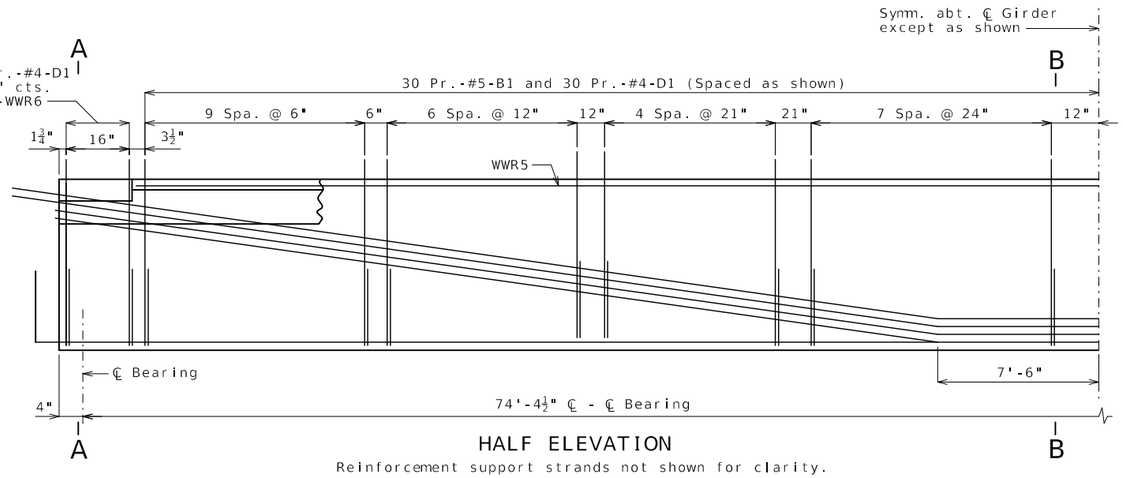

HALF ELEVATION

Reinforcement support strands not shown for clarity.

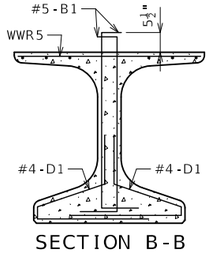

SECTION B-B

Strands not shown for clarity.

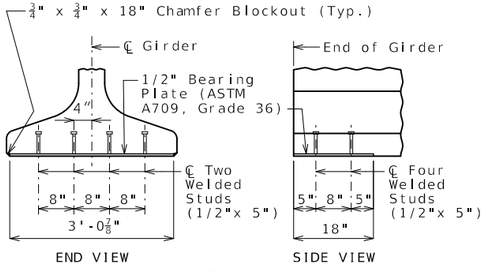

END VIEW SIDE VIEW

BEARING PLATE

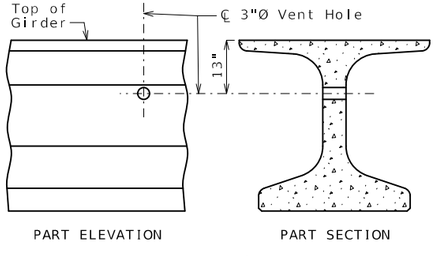

PART ELEVATION PART SECTION

VENT HOLE

Place vent holes at or near upgrade 1/3 point of girders and clear reinforcing steel or strands by 1 1/2" minimum and steel intermediate diaphragm bolt connections by 6" minimum.

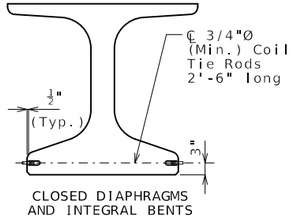

CLOSED DIAPHRAGMS AND INTEGRAL BENTS

COIL TIES

Exclude coil tie at exterior face of exterior girders except at integral end bents.

NU-GIRDERS (ALTERNATE REINFORCEMENT) - SPAN (1-2)

Detailed Feb. 2026
Checked May 2026

Note: This drawing is not to scale. Follow dimensions.

STATE OF MISSOURI
TIMOTHY D. LEAF
NUMBER PE-2012000778
PROFESSIONAL ENGINEER
10/06/2026 3:25:13 PM
TIMOTHY D. LEAF - CIVIL
MO-PE-2012000778

DATE PREPARED 10/6/2026

ROUTE	STATE
K	MO
DISTRICT	SHEET NO.
BR	16

COUNTY KNOX

JOB NO. JNE0156

CONTRACT ID.

PROJECT NO.

BRIDGE NO. A9721

DATE	DESCRIPTION

MISSOURI HIGHWAYS AND TRANSPORTATION COMMISSION
105 WEST CAPITOL
JEFFERSON CITY, MO 65102
1-888-ASK-MODOT (1-888-275-6636)

(1) Fabricator shall apply a bond breaker to this region excluding where joint filler will be applied.

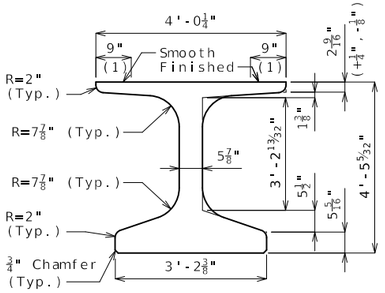

DIMENSIONS

(2) Outer strands tensioned to 2.02 kips/strand and inner strands to 8 kips/strand. Placed symmetrical about ℄ Girder. May be moved laterally in pairs.

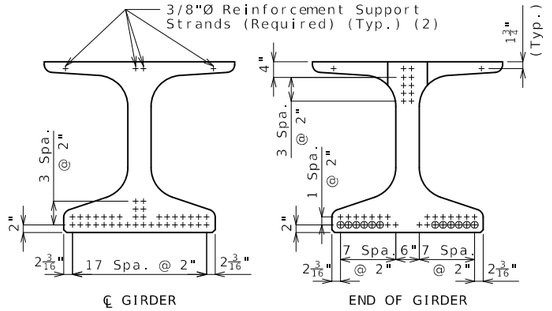

STRAND ARRANGEMENT

\+ Indicates prestressing strand.

o Indicates cut & shop bend with 3'-0" projection.

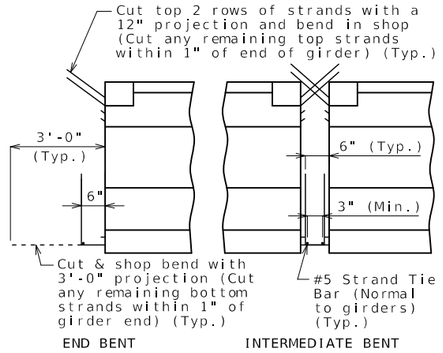

STRANDS AT GIRDER ENDS

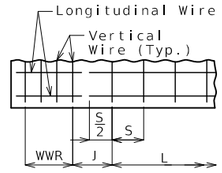

WELDED WIRE PLACEMENT

S = Vertical wire spacing

L = Length of WWR mats

J = Distance between WWR mats

Bill of Reinforcing Steel

Bars Each Girder				
No.	Size/Mark		Length	Shape
140	3	G1	2'-10"	8
2	4	G3	3'-10"	20

Welded Wire Each Girder					
Mark	Size	S	W	L	J
WWR1	D31	4"	W12	5'-4"	4"
WWR2	D31	8"	W12	10'-8"	8"
WWR3	D31	16"	W12	20'-0"	16"
WWR4	D31	24"	W12	22'-0"	--
WWR6	D31	2"	W12	16"	2¾"

Bending Diagrams



Shape 20

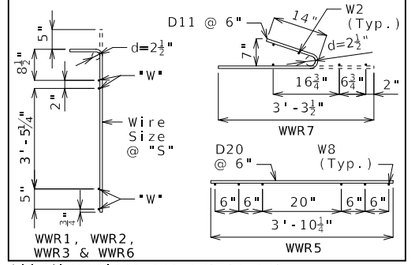

All dimensions are out to out.

Hooks and bends shall be in accordance with the CRSI Manual of Standard Practice for Detailing Reinforced Concrete Structures, Stirrup and Tie Dimensions.

Actual bar lengths are measured along centerline of bar to the nearest inch.

Minimum clearance to reinforcing shall be 1", unless otherwise shown.

All bar reinforcement shall be ASTM A615 or A706 Grade 60.

WWR shall not be epoxy coated.

G4 and G5 not required for interior girders. G3 not required for exterior girders of intermediate spans. Half no. of G3, G4, and G5 not required for ext. girders of end spans.

General Notes:

Concrete for prestressed beams shall be Class A-1 with f'c = 8000 psi and f'ci = 6500 psi.

Use 38 strands, 0.6"Ø Grade 270, with an initial prestress force of 1,670 kips.

Pretensioned members shall be in accordance with Sec 1029.

Fabricator shall be responsible for location and design of lifting devices.

Exterior and interior girders are the same except: coil ties, top flange blockout, coil inserts for slab drains, holes for steel intermediate diaphragms.

For Girder Camber Diagram, see Sheet No. 23.

The 1 1/2"Ø holes shall be cast in the web for steel intermediate diaphragms. Drilling is not allowed. For location of holes and details of steel intermediate diaphragms, see Sheet No. 14.

For location of coil inserts at slab drains, see Sheet No. 22.

For location of coil ties at concrete diaphragms and integral bents, see Sheets No. 21.

Alternate bar reinforcing steel details are provided and may be used. The same type of reinforcing steel shall be used for all girders in all spans.

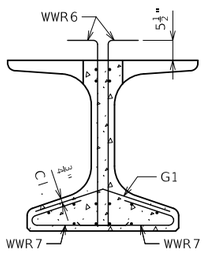

SECTION A-A

Strands not shown for clarity.

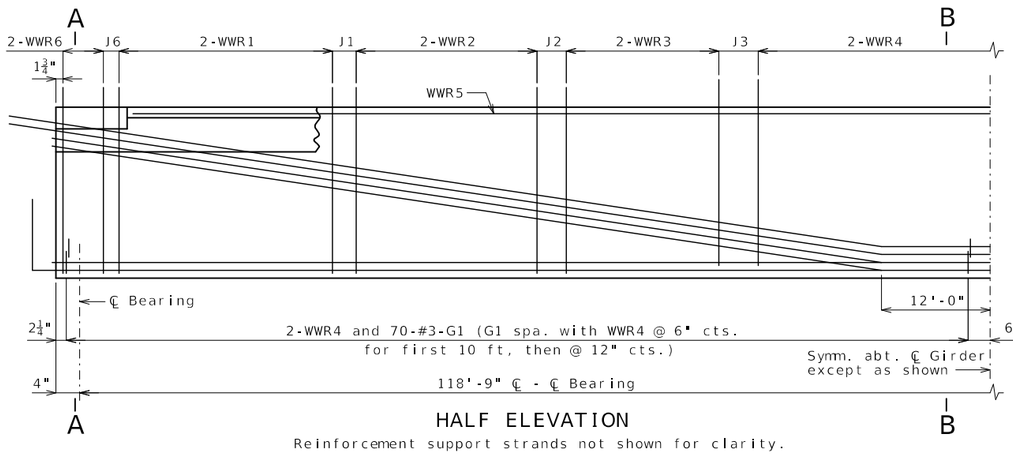

HALF ELEVATION

Reinforcement support strands not shown for clarity.

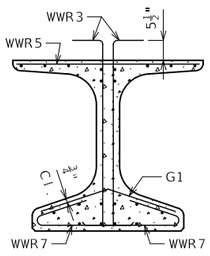

SECTION B-B

Strands not shown for clarity.

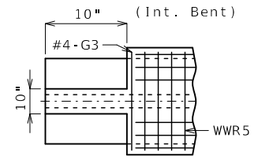

TOP FLANGE BLOCKOUT

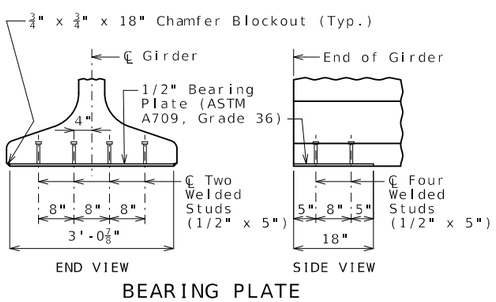

BEARING PLATE

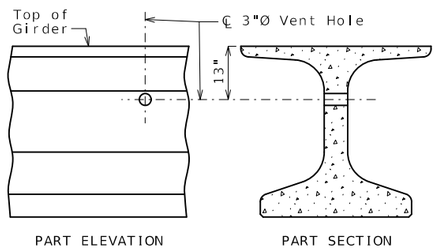

VENT HOLE

Place vent holes at or near upgrade 1/3 point of girders and clear reinforcing steel or strands by 1 1/2" minimum.

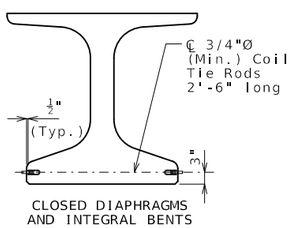

CLOSED DIAPHRAGMS AND INTEGRAL BENTS

COIL TIES

Exclude coil tie at exterior face of exterior girders except at integral end bents.

NU-GIRDERS - SPAN (2-3)

Detailed Feb. 2026
Checked May 2026

Note: This drawing is not to scale. Follow dimensions.

STATE OF MISSOURI
TIMOTHY D. LEAF
NUMBER PE-2012000778
PROFESSIONAL ENGINEER
10/06/2026 3:25:25 PM
TIMOTHY D. LEAF - CIVIL
MO-PE-2012000778

DATE PREPARED
10/6/2026

ROUTE	STATE
K	MO
DISTRICT	SHEET NO.
BR	17

COUNTY
KNOX

JOB NO.
JNE0156

CONTRACT ID.

PROJECT NO.

BRIDGE NO.
A9721

DESCRIPTION

DATE

MISSOURI HIGHWAYS AND TRANSPORTATION COMMISSION

105 WEST CAPITOL
JEFFERSON CITY, MO 65102
1-888-ASK-MODOT (1-888-275-6636)

(1) Fabricator shall apply a bond breaker to this region excluding where joint filler will be applied.

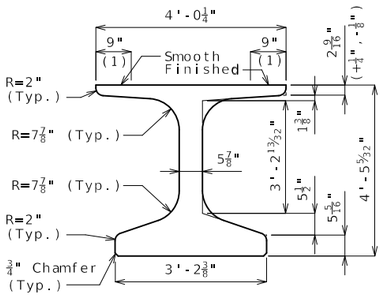

DIMENSIONS

(2) Outer strands tensioned to 2.02 kips/strand and inner strands to 8 kips/strand. Placed symmetrical about ℄ Girder. May be moved laterally in pairs.

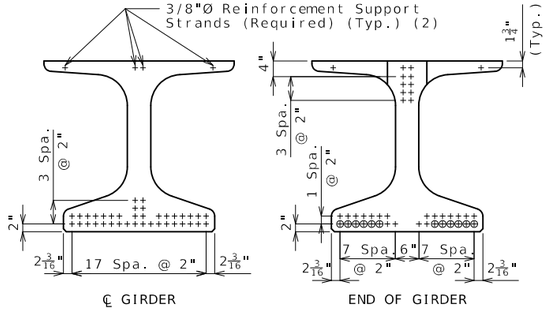

℄ GIRDER END OF GIRDER

STRAND ARRANGEMENT

\+ Indicates prestressing strand.

○ Indicates cut & shop bend with 3'-0" projection.

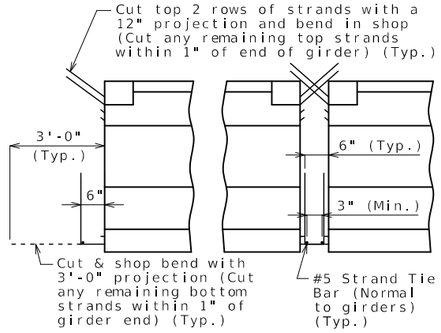

END BENT INTERMEDIATE BENT

STRANDS AT GIRDER ENDS

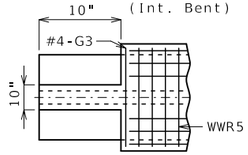

TOP FLANGE BLOCKOUT

Bill of Reinforcing Steel - Each Girder			
No.	Size/ Mark	Length	Shape
206	5 B1	5'-10"	11S
216	4 D1	4'-0"	9S
2	4 G3	3'-10"	20

Bending Diagrams

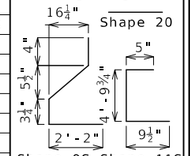

Welded Wire Reinforcement - Each Girder

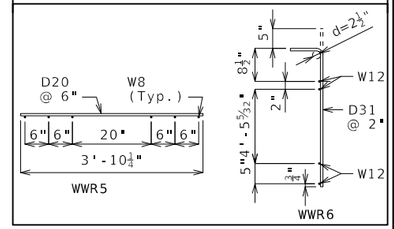

All dimensions are out to out.

Hooks and bends shall be in accordance with the CRSI Manual of Standard Practice for Detailing Reinforced Concrete Structures, Stirrup and Tie Dimensions.

Actual bar lengths are measured along centerline of bar to the nearest inch.

Minimum clearance to reinforcing shall be one inch.

All bar reinforcement shall be ASTM A615 or A706 Grade 60.

The two D1 bars may be furnished as one bar at the fabricator's option.

All B1 bars shall be epoxy coated.

G4 and G5 not required for interior girders. G3 not required for exterior girders of intermediate spans. Half no. of G3, G4, and G5 not required for ext. girders of end spans.

General Notes:

Concrete for prestressed girders shall be Class A-1 with f'c = 8000 psi and f'ci = 6500 psi.

Use 38 strands, 0.6"Ø Grade 270, with an initial prestress force of 1,670 kips.

Pretensioned members shall be in accordance with Sec 1029.

Fabricator shall be responsible for location and design of lifting devices.

Exterior and interior girders are the same except: coil ties, top flange blockout, coil inserts for slab drains, holes for steel intermediate diaphragms.

For Girder Camber Diagram, see Sheet No. 23.

The 1 1/2"Ø holes shall be cast in the web for steel intermediate diaphragms. Drilling is not allowed. For location of holes and details of steel intermediate diaphragms, see Sheet No. 14.

For location of coil inserts at slab drains, see Sheet No. 22.

For location of coil ties at concrete diaphragms and integral bents, see Sheets No. 21.

Alternate bar reinforcing steel details are provided and may be used. The same type of reinforcing steel shall be used for all girders in all spans.

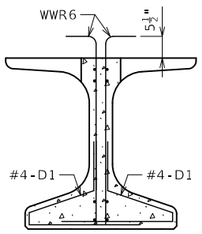

SECTION A-A

Strands not shown for clarity.

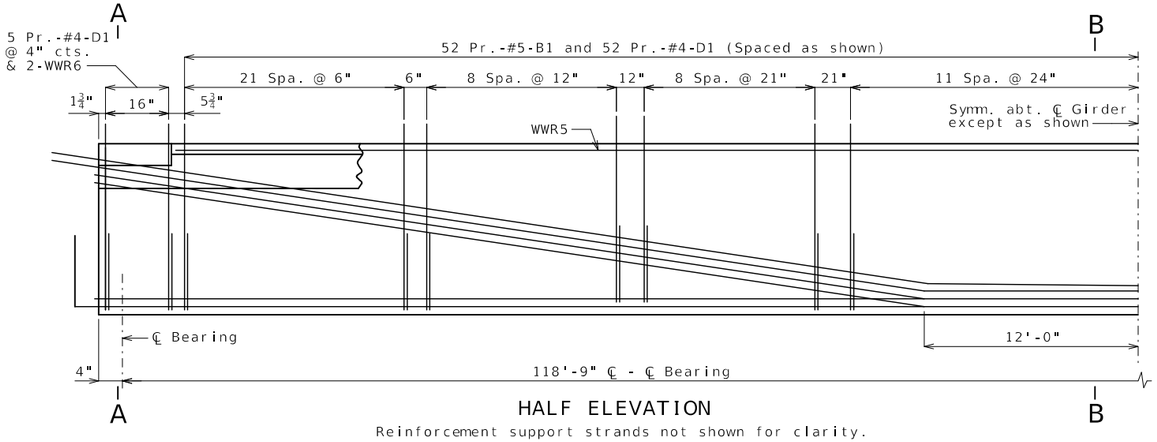

HALF ELEVATION

Reinforcement support strands not shown for clarity.

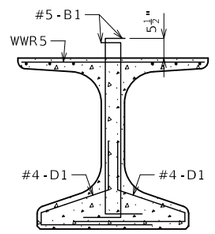

SECTION B-B

Strands not shown for clarity.

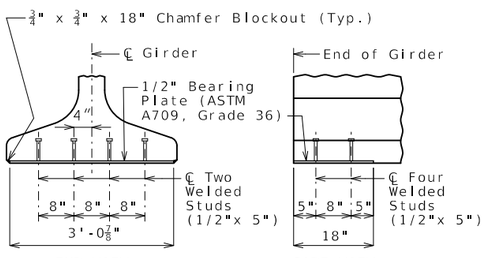

END VIEW SIDE VIEW

BEARING PLATE

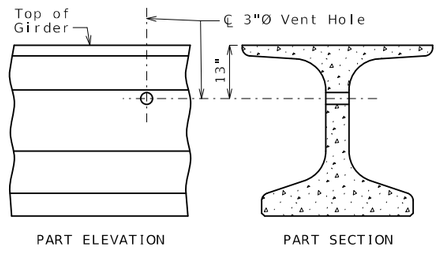

PART ELEVATION PART SECTION

VENT HOLE

Place vent holes at or near upgrade 1/3 point of girders and clear reinforcing steel or strands by 1 1/2" minimum.

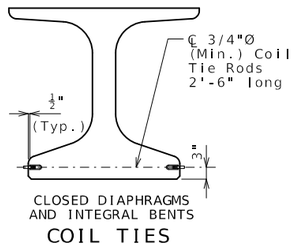

CLOSED DIAPHRAGMS AND INTEGRAL BENTS

COIL TIES

Exclude coil tie at exterior face of exterior girders except at integral end bents.

NU-GIRDERS (ALTERNATE REINFORCEMENT) - SPAN (2-3)

Detailed Feb. 2026
Checked May 2026

Note: This drawing is not to scale. Follow dimensions.

STATE OF MISSOURI
TIMOTHY D. LEAF
NUMBER PE-2012000778
PROFESSIONAL ENGINEER
10/06/2026 3:25:46 PM
TIMOTHY D. LEAF - CIVIL
MO-PE-2012000778

DATE PREPARED: 10/6/2026

ROUTE	STATE
K	MO
DISTRICT	SHEET NO.
BR	18

COUNTY: KNOX
JOB NO.: JNE0156
CONTRACT ID.:
PROJECT NO.:
BRIDGE NO.: A9721

DESCRIPTION | DATE

MISSOURI HIGHWAYS AND TRANSPORTATION COMMISSION

105 WEST CAPITOL
JEFFERSON CITY, MO 65102
1-888-ASK-MODOT (1-888-275-6636)

(1) Fabricator shall apply a bond breaker to this region excluding where joint filler will be applied.

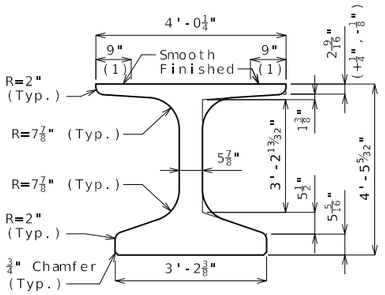

DIMENSIONS

(2) Outer strands tensioned to 2.02 kips/strand and inner strands to 8 kips/strand. Placed symmetrical about ℄ Girder. May be moved laterally in pairs.

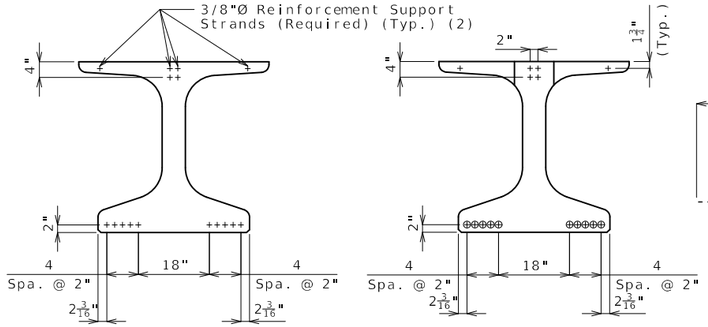

℄ GIRDER

END OF GIRDER

STRAND ARRANGEMENT

+ Indicates prestressing strand.

o Indicates cut & shop bend with 3'-0" projection.

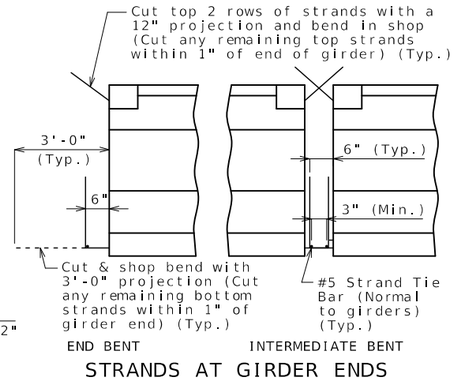

END BENT INTERMEDIATE BENT

STRANDS AT GIRDER ENDS

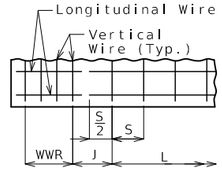

WELDED WIRE PLACEMENT

S = Vertical wire spacing

L = Length of WWR mats

J = Distance between WWR mats

Bill of Reinforcing Steel

Bars Each Girder

No.	Size/Mark	Length	Shape
76	3 G1	2'-10"	8
2	4 G3	3'-10"	20

Welded Wire Each Girder

Mark	Size	S	W	L	J
WWR1	D31	4"	W12	5'-8"	4"
WWR2	D31	12"	W12	7'-0"	12"
WWR3	D31	24"	W12	12'-0"	
WWR6	D31	2"	W12	16"	4½"

Bending Diagrams

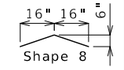

Shape 20

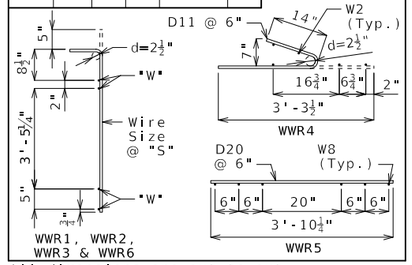

All dimensions are out to out.

Hooks and bends shall be in accordance with the CRSI Manual of Standard Practice for Detailing Reinforced Concrete Structures, Stirrup and Tie Dimensions.

Actual bar lengths are measured along centerline of bar to the nearest inch.

Minimum clearance to reinforcing shall be 1", unless otherwise shown.

All bar reinforcement shall be ASTM A615 or A706 Grade 60.

WWR shall not be epoxy coated.

G4 and G5 not required for interior girders. G3 not required for exterior girders of intermediate spans. Half no. of G3, G4, and G5 not required for ext. girders of end spans.

General Notes:

Concrete for prestressed beams shall be Class A-1 with f'c = 8000 psi and f'ci = 6500 psi.

Use 12 strands, 0.6"Ø Grade 270, with an initial prestress force of 527 kips.

Pretensioned members shall be in accordance with Sec 1029.

Fabricator shall be responsible for location and design of lifting devices.

Exterior and interior girders are the same except: coil ties, top flange blockout, coil inserts for slab drains, holes for steel intermediate diaphragms.

For Girder Camber Diagram, see Sheet No. 23.

The 1 1/2"Ø holes shall be cast in the web for steel intermediate diaphragms. Drilling is not allowed. For location of holes and details of steel intermediate diaphragms, see Sheet No. 14.

For location of coil inserts at slab drains, see Sheet No. 22.

For location of coil ties at concrete diaphragms and integral bents, see Sheets No. 12 and 21.

Alternate bar reinforcing steel details are provided and may be used. The same type of reinforcing steel shall be used for all girders in all spans.

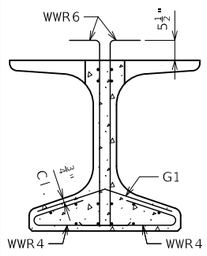

SECTION A-A

Strands not shown for clarity.

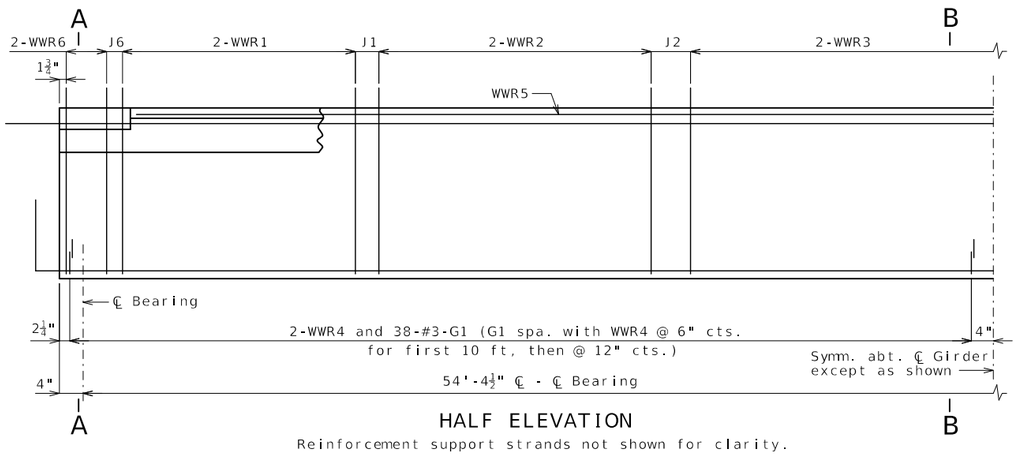

HALF ELEVATION

Reinforcement support strands not shown for clarity.

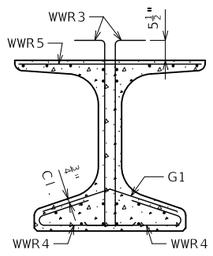

SECTION B-B

Strands not shown for clarity.

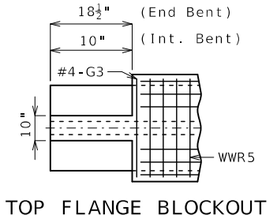

TOP FLANGE BLOCKOUT

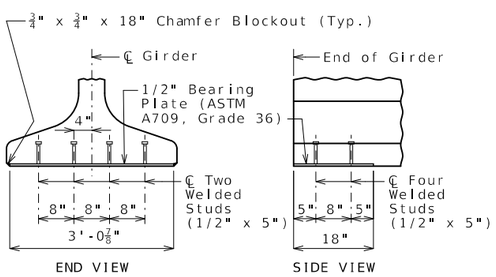

BEARING PLATE

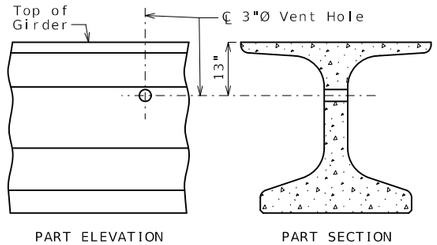

VENT HOLE

Place vent holes at or near upgrade 1/3 point of girders and clear reinforcing steel or strands by 1 1/2" minimum and steel intermediate diaphragm bolt connections by 6" minimum.

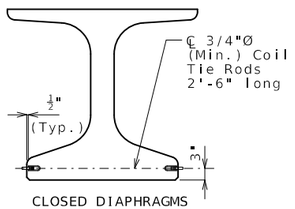

CLOSED DIAPHRAGMS AND INTEGRAL BENTS

COIL TIES

Exclude coil tie at exterior face of exterior girders except at integral end bents.

NU-GIRDERS - SPANS (3-4)

Detailed Feb. 2026
Checked May 2026

Note: This drawing is not to scale. Follow dimensions.

STATE OF MISSOURI
TIMOTHY D. LEAF
NUMBER PE-2012000778
PROFESSIONAL ENGINEER
10/06/2026 3:25:56 PM
TIMOTHY D. LEAF - CIVIL
MO-PE-2012000778

DATE PREPARED 10/6/2026

ROUTE K | STATE MO
DISTRICT BR | SHEET NO. 19
COUNTY KNOX
JOB NO. JNE0156
CONTRACT ID.
PROJECT NO.
BRIDGE NO. A9721

DESCRIPTION | DATE

MISSOURI HIGHWAYS AND TRANSPORTATION COMMISSION
105 WEST CAPITOL
JEFFERSON CITY, MO 65102
1-888-ASK-MODOT (1-888-275-6636)

(1) Fabricator shall apply a bond breaker to this region excluding where joint filler will be applied.

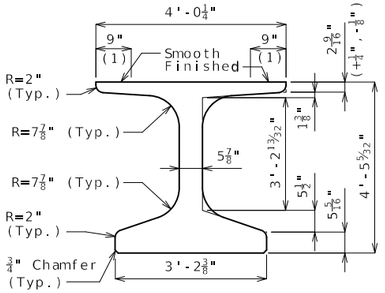

DIMENSIONS

(2) Outer strands tensioned to 2.02 kips/strand and inner strands to 8 kips/strand. Placed symmetrical about ℄ Girder. May be moved laterally in pairs.

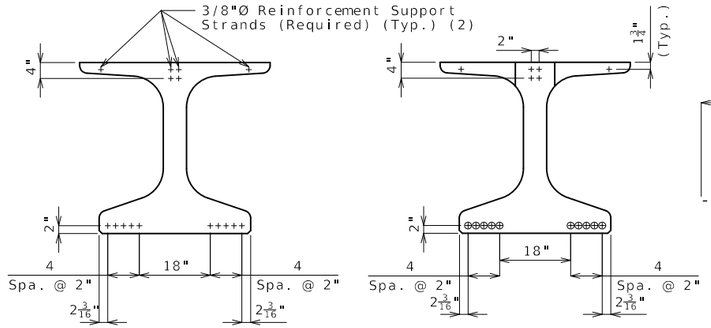

℄ GIRDER END OF GIRDER

STRAND ARRANGEMENT

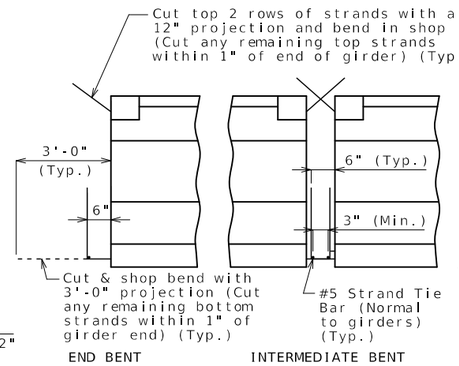

END BENT INTERMEDIATE BENT

STRANDS AT GIRDER ENDS

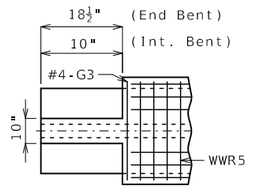

TOP FLANGE BLOCKOUT

+ Indicates prestressing strand.

o Indicates cut & shop bend with 3'-0" projection.

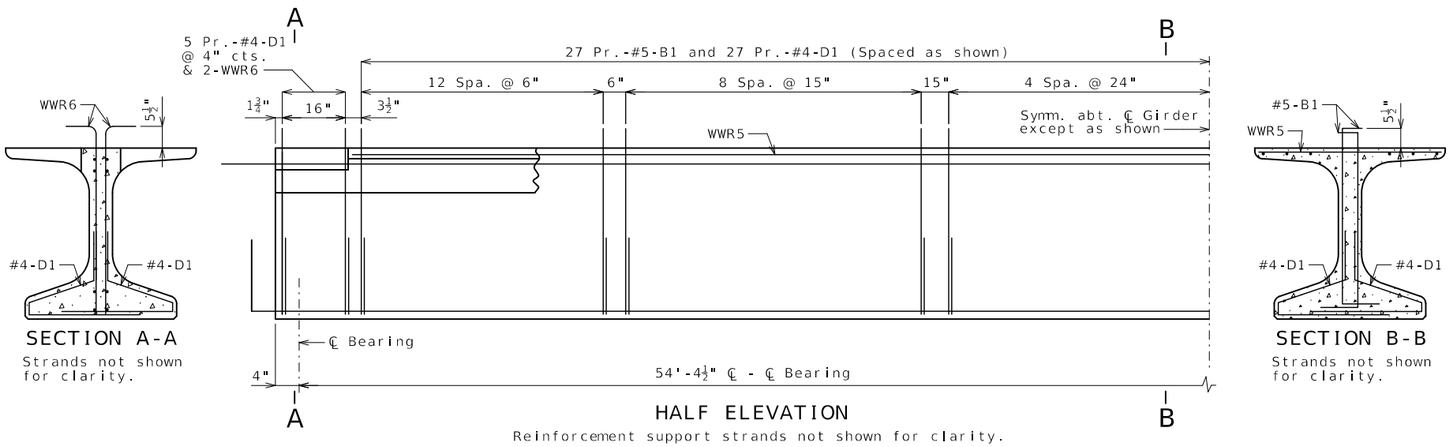

SECTION A-A
Strands not shown for clarity.

HALF ELEVATION
Reinforcement support strands not shown for clarity.

SECTION B-B
Strands not shown for clarity.

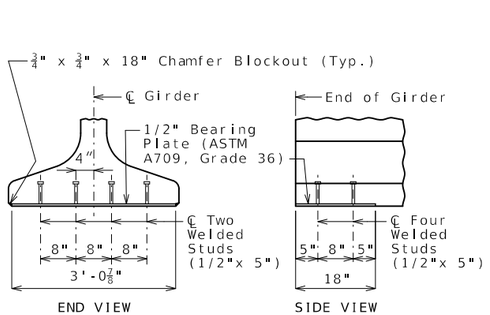

BEARING PLATE

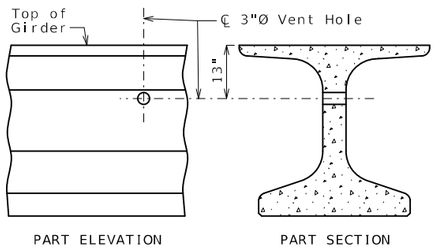

VENT HOLE

Place vent holes at or near upgrade 1/3 point of girders and clear reinforcing steel or strands by 1 1/2" minimum.

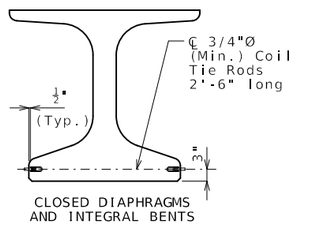

COIL TIES

Exclude coil tie at exterior face of exterior girders except at integral end bents.

Bill of Reinforcing Steel - Each Girder			
No.	Size/ Mark	Length	Shape
106	5 B1	5'-10"	11S
116	4 D1	4'-0"	9S
2	4 G3	3'-10"	20

Bending Diagrams

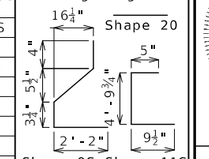

Welded Wire Reinforcement - Each Girder

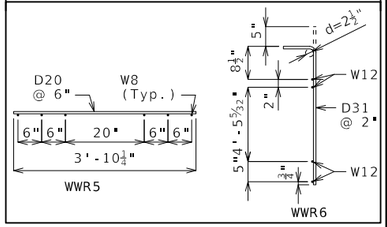

All dimensions are out to out.

Hooks and bends shall be in accordance with the CRSI Manual of Standard Practice for Detailing Reinforced Concrete Structures, Stirrup and Tie Dimensions.

Actual bar lengths are measured along centerline of bar to the nearest inch.

Minimum clearance to reinforcing shall be one inch.

All bar reinforcement shall be ASTM A615 or A706 Grade 60.

The two D1 bars may be furnished as one bar at the fabricator's option.

All B1 bars shall be epoxy coated.

G4 and G5 not required for interior girders. G3 not required for exterior girders of intermediate spans. Half no. of G3, G4, and G5 not required for ext. girders of end spans.

General Notes:

Concrete for prestressed girders shall be Class A-1 with f'c = 8000 psi and f'ci = 6500 psi.

Use 12 strands, 0.6"Ø Grade 270, with an initial prestress force of 527 kips.

Pretensioned members shall be in accordance with Sec 1029.

Fabricator shall be responsible for location and design of lifting devices.

Exterior and interior girders are the same except: coil ties, top flange blockout, coil inserts for slab drains, holes for steel intermediate diaphragms.

For Girder Camber Diagram, see Sheet No. 23.

The 1 1/2"Ø holes shall be cast in the web for steel intermediate diaphragms. Drilling is not allowed. For location of holes and details of steel intermediate diaphragms, see Sheet No. 14.

For location of coil inserts at slab drains, see Sheet No. 22.

For location of coil ties at concrete diaphragms and integral bents, see Sheets No. 12 and 21.

Alternate bar reinforcing steel details are provided and may be used. The same type of reinforcing steel shall be used for all girders in all spans.

STATE OF MISSOURI
TIMOTHY D. LEAF
NUMBER PE-2012000778
PROFESSIONAL ENGINEER
10/06/2026 3:26:07 PM
TIMOTHY D. LEAF - CIVIL
MO-PE-2012000778

DATE PREPARED 10/6/2026

ROUTE K | STATE MO

DISTRICT BR | SHEET NO. 20

COUNTY KNOX

JOB NO. JNE0156

CONTRACT ID.

PROJECT NO.

BRIDGE NO. A9721

DESCRIPTION | DATE

MISSOURI HIGHWAYS AND TRANSPORTATION COMMISSION
105 WEST CAPITOL
JEFFERSON CITY, MO 65102
1-888-ASK-MODOT (1-888-275-6636)

Detailed Feb. 2026
Checked May 2026

NU-GIRDERS (ALTERNATE REINFORCEMENT) - SPAN (3-4)

Note: This drawing is not to scale. Follow dimensions.

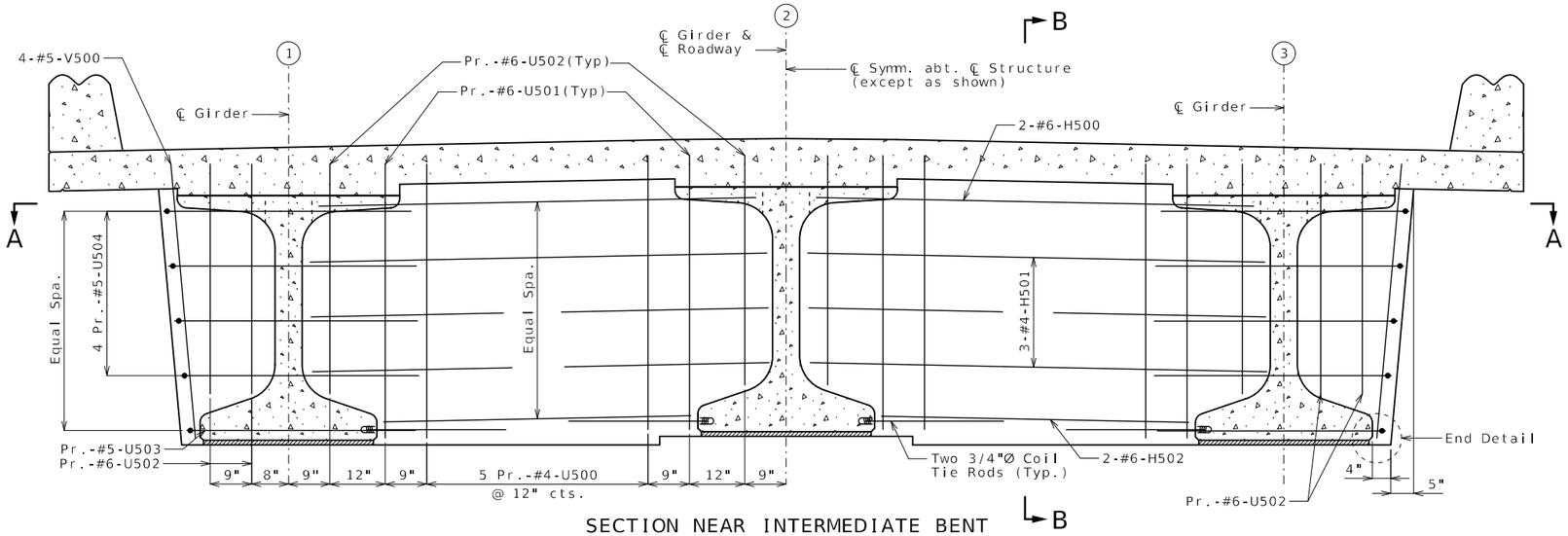

SECTION NEAR INTERMEDIATE BENT

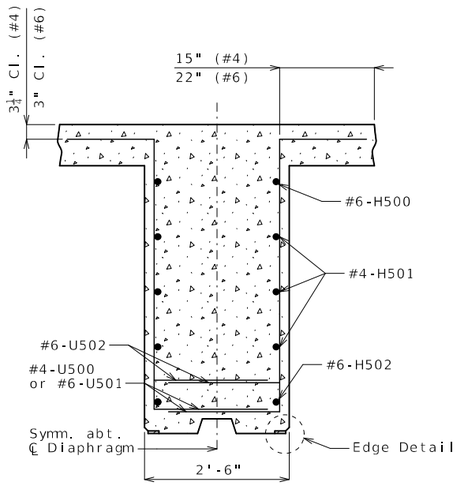

SECTION B-B

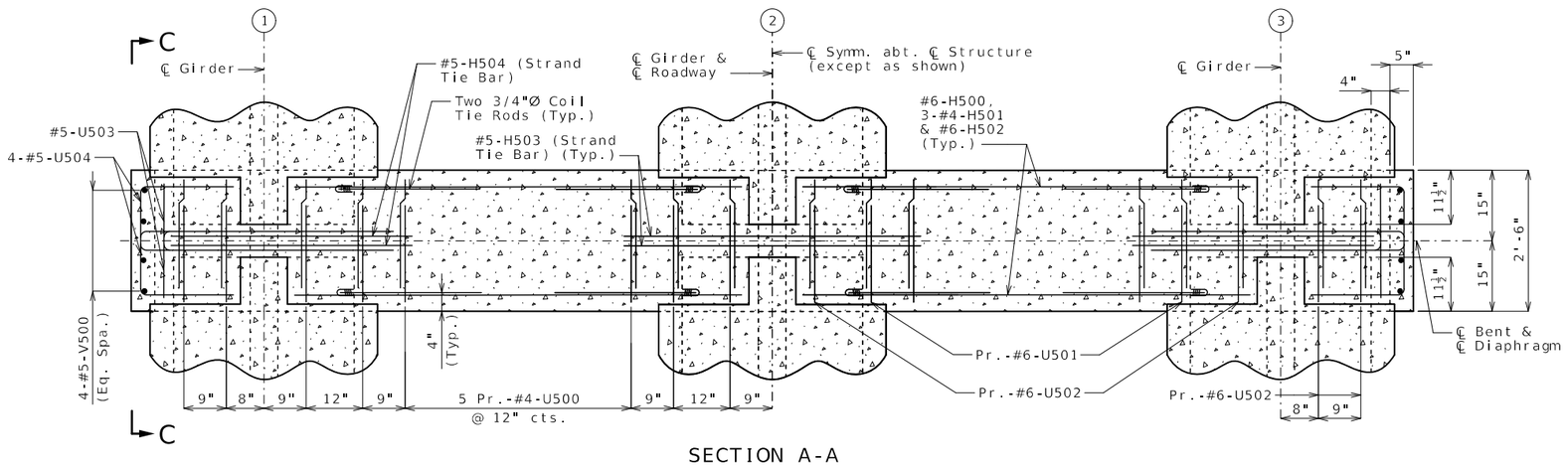

SECTION A-A

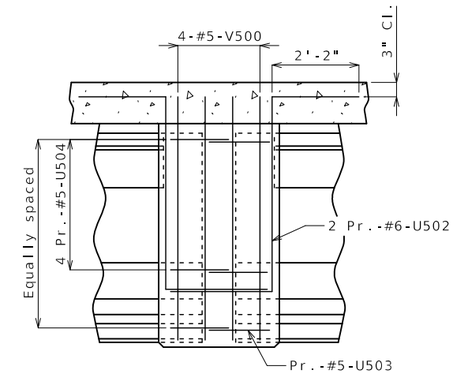

ELEVATION C-C

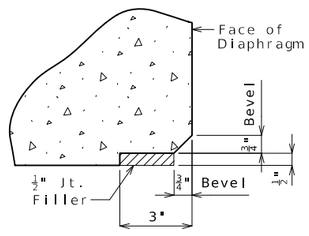

EDGE DETAIL

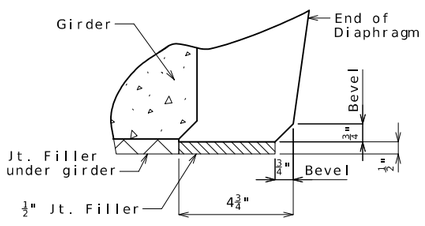

END DETAIL

Notes :

Diaphragm at intermediate bent shall be built vertical.

For location of #5-H503 & #5-H504 (Strand Tie Bars) and coil tie rods, see Sheets No. 15 thru 20.

All U bars in diaphragm shall be placed parallel to centerline of roadway.

CONCRETE DIAPHRAGM AT INTERMEDIATE BENTS NO. 2 & 3

Detailed Mar. 2026
Checked May 2026

Note: This drawing is not to scale. Follow dimensions.

STATE OF MISSOURI
TIMOTHY D. LEAF
NUMBER PE-2012000778
PROFESSIONAL ENGINEER
10/06/2026 3:28:13 PM
TIMOTHY D. LEAF - CIVIL
MO-PE-2012000778

DATE PREPARED
10/6/2026

ROUTE	STATE
K	MO
DISTRICT	SHEET NO.
BR	21

COUNTY
KNOX

JOB NO.
JNE0156

CONTRACT ID.

PROJECT NO.

BRIDGE NO.
A9721

DESCRIPTION	DATE

MISSOURI HIGHWAYS AND TRANSPORTATION COMMISSION
105 WEST CAPITOL
JEFFERSON CITY, MO 65102
1-888-ASK-MODOT (1-888-275-6636)

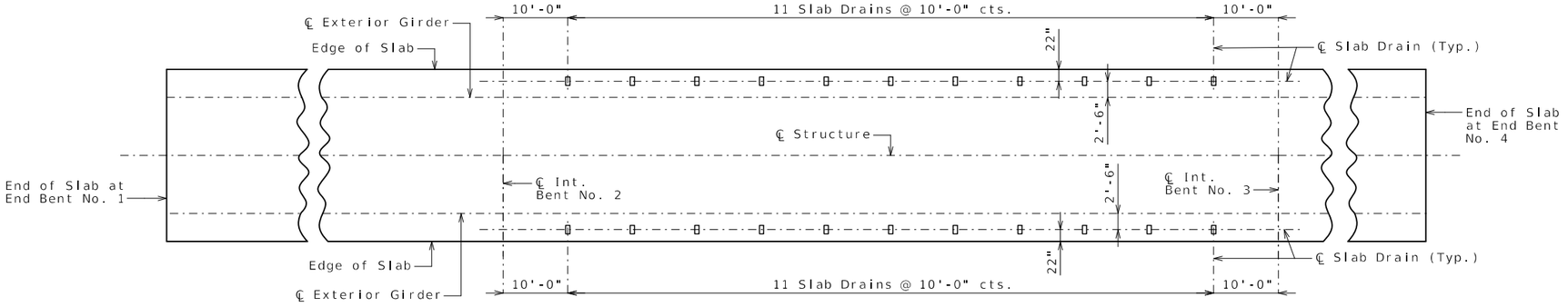

PLAN OF SLAB SHOWING SLAB DRAIN LOCATIONS

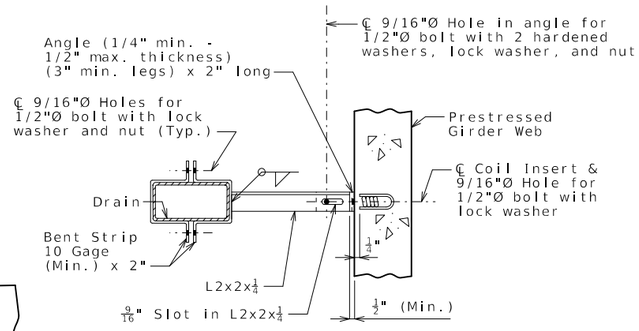

PART SECTION SHOWING BRACKET ASSEMBLY

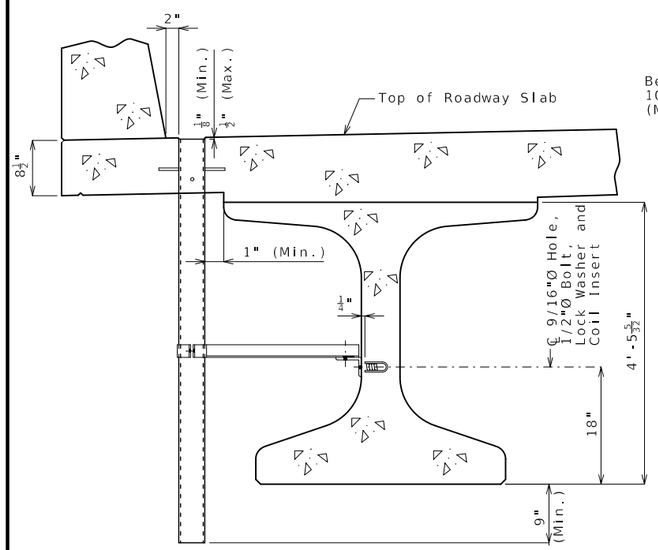

PART SECTION NEAR DRAIN

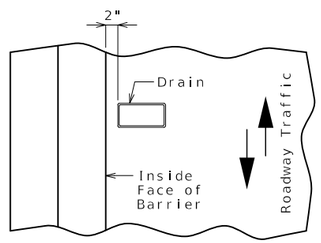

PART PLAN OF SLAB AT DRAIN

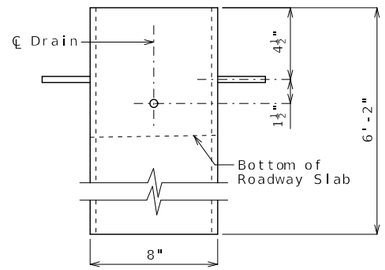

ELEVATION OF DRAIN

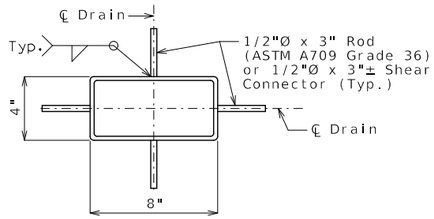

PLAN OF STEEL DRAIN OPTION

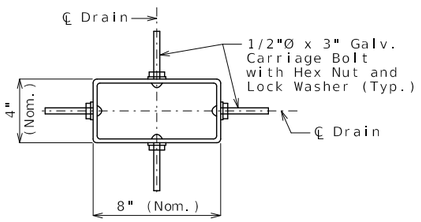

PLAN OF FRP DRAIN OPTION

General Notes:

Contractor shall have the option to construct either steel or FRP slab drains. All drains shall be of same type.

Slab drain bracket assembly shall be ASTM A709 Grade 36 steel.

Locate drains in slab by dimensions shown in Part Section Near Drain.

Reinforcing steel shall be shifted to clear drains.

The coil inserts and bracket assembly shall be galvanized in accordance with ASTM A123.

All 1/2"Ø bolts shall be ASTM A307.

Shop drawings will not be required for the slab drains and the bracket assembly.

The coil insert required for the bracket assembly attachment shall be located on the prestressed girder shop drawings.

Coil inserts shall have a concrete pull-out strength (ultimate load) of at least 2,500 pounds in 5,000 psi concrete.

All bolts, hardened washers, lock washers and nuts shall be galvanized in accordance with ASTM F2329.

Notes for Steel Drain:

Slab drains may be fabricated from 1/4" structural steel tubing ASTM A500 or A501.

Outside dimensions of drains are 8" x 4".

The drains shall be galvanized in accordance with ASTM A123.

Notes for FRP Drain:

Drains shall be machine filament-wound thermosetting resin tubing meeting the requirements of ASTM D2996 with the following exceptions:

Shape of drains shall be rectangular with outside nominal dimensions of 8" x 4".

Minimum reinforced wall thickness shall be 1/4 inch.

The resin used shall be ultraviolet (UV) resistant and/or have UV inhibitors mixed throughout. Drains may have an exterior coating for additional UV resistance.

The color of the slab drain shall be gray (Federal Standard #26373). The color shall be uniform throughout the resin and any coating used.

The combination of materials used in the manufacture of the drains shall be tested for UV resistance in accordance with ASTM D4329 Cycle A. The representative material shall withstand at least 500 hours of testing with only minor discoloration and without any physical deterioration. The contractor shall furnish the results of the required ultraviolet testing prior to acceptance of the slab drains.

At the contractor's option, drains may be field cut. The method of cutting FRP slab drain shall be as recommended by the manufacturer to ensure a smooth, chip free cut.

SLAB DRAINS

Detailed Mar. 2026
Checked May 2026

Note: This drawing is not to scale. Follow dimensions.

STATE OF MISSOURI
TIMOTHY D. LEAF
NUMBER PE-2012000778
PROFESSIONAL ENGINEER
10/06/2026 3:28:29 PM
TIMOTHY D. LEAF - CIVIL
MO-PE-2012000778

DATE PREPARED: 10/6/2026
ROUTE: K
STATE: MO
DISTRICT: BR
SHEET NO.: 22
COUNTY: KNOX
JOB NO.: JNE0156
CONTRACT ID.:
PROJECT NO.:
BRIDGE NO.: A9721

DESCRIPTION	DATE

MISSOURI HIGHWAYS AND TRANSPORTATION COMMISSION
105 WEST CAPITOL
JEFFERSON CITY, MO 65102
1-888-ASK-MODOT (1-888-275-6636)

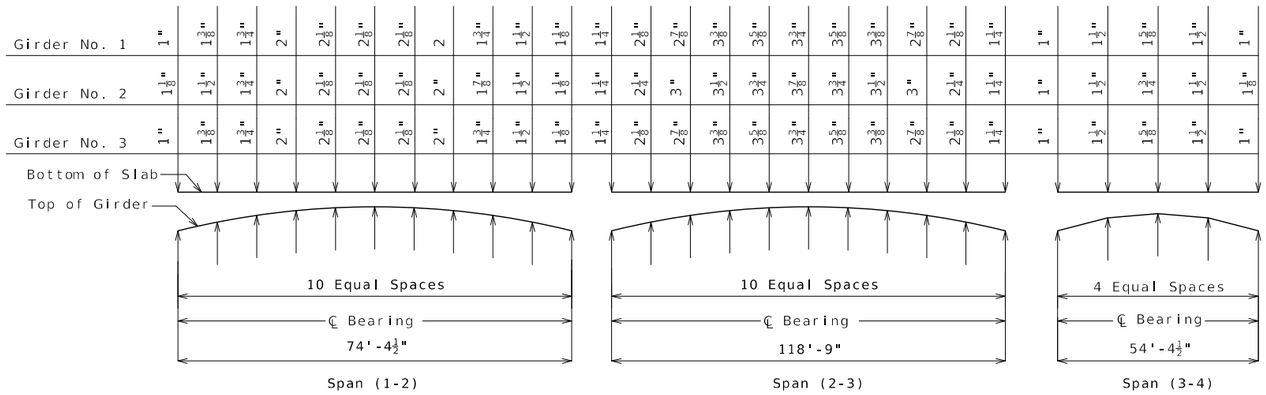

THEORETICAL SLAB HAUNCHING DIAGRAM (ESTIMATED AT 90 DAYS)

If girder camber is different from that shown in the camber diagram, in order to maintain minimum slab thickness, an adjustment of the slab haunches, an increase in slab thickness or a raise in grade uniformly throughout the structure shall be necessary. The haunch shall be limited to ensure the projecting girder reinforcement is embedded into slab at least 2 inches. No payment will be made for additional labor or materials required for variation in haunching, slab thickness or grade adjustment.

Concrete in the slab haunches is included in the Estimated Quantities for Slab on Concrete NU-Girder.

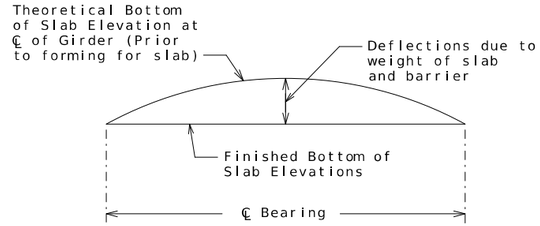

TYPICAL SLAB ELEVATIONS DIAGRAM

Theoretical Bottom of Slab Elevations at Centerline of Girder (Prior to forming for slab) (Estimated at 90 days)

Girder Number	Span (1-2) (74'-4½" ℄ Brg. - ℄ Brg.)										
	℄ Brg.	.10	.20	.30	.40	.50	.60	.70	.80	.90	℄ Brg.
1	647.36	647.53	647.68	647.83	647.96	648.08	648.19	648.28	648.36	648.43	648.49
2	647.52	647.69	647.84	647.99	648.12	648.24	648.35	648.44	648.53	648.59	648.65
3	647.36	647.53	647.68	647.83	647.96	648.08	648.19	648.28	648.36	648.43	648.49
Girder Number	Span (2-3) (118'-9" ℄ Brg. - ℄ Brg.)										
	℄ Brg.	.10	.20	.30	.40	.50	.60	.70	.80	.90	℄ Brg.
1	648.50	648.67	648.80	648.90	648.95	648.95	648.90	648.81	648.67	648.49	648.28
2	648.66	648.83	648.97	649.06	649.12	649.12	649.07	648.98	648.84	648.66	648.44
3	648.50	648.67	648.80	648.90	648.95	648.95	648.90	648.81	648.67	648.49	648.28

Girder Number	Span (3-4) (54'-4½" ℄ Brg. - ℄ Brg.)				
	℄ Brg.	.25	.50	.75	℄ Brg.
1	648.27	648.09	647.87	647.62	647.33
2	648.43	648.25	648.03	647.78	647.49
3	648.27	648.09	647.87	647.62	647.33

Elevations are based on a constant slab thickness of 8 1/2" and include allowance for theoretical dead load deflections due to weight of slab and barrier.

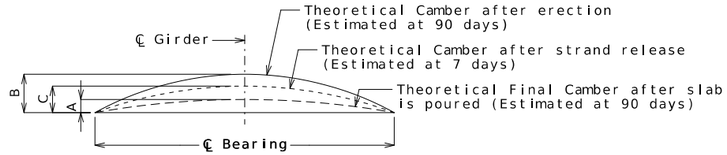

Girder	Span (1-2)			Span (2-3)			Span (3-4)		
	A	B	C	A	B	C	A	B	C
Exterior	$\frac{3}{8}$"	$\frac{7}{8}$"	$\frac{5}{8}$"	$1\frac{1}{4}$"	$4\frac{1}{4}$"	3"	$\frac{1}{8}$"	$\frac{1}{4}$"	$\frac{1}{8}$"
Interior	$\frac{3}{8}$"			$1\frac{1}{8}$"			$\frac{1}{8}$"		

GIRDER CAMBER DIAGRAM

Conversion Factors for Girder Camber (Estimated at 90 days):

Span (1-2) & (2-3): 0.1 pt. = 0.314 x 0.5 pt.
0.2 pt. = 0.593 x 0.5 pt.
0.3 pt. = 0.813 x 0.5 pt.
0.4 pt. = 0.952 x 0.5 pt.

Span (3-4): 0.25 pt. = 0.7125 x 0.5 pt.

STATE OF MISSOURI
TIMOTHY D. LEAF
NUMBER PE-2012000778
PROFESSIONAL ENGINEER
10/06/2026 3:28:41 PM
TIMOTHY D. LEAF - CIVIL
MO-PE-2012000778

DATE PREPARED: 10/6/2026
ROUTE: K | STATE: MO
DISTRICT: BR | SHEET NO.: 23
COUNTY: KNOX
JOB NO.: JNE0156
CONTRACT ID.:
PROJECT NO.:
BRIDGE NO.: A9721

DESCRIPTION | DATE

MISSOURI HIGHWAYS AND TRANSPORTATION COMMISSION
105 WEST CAPITOL
JEFFERSON CITY, MO 65102
1-888-ASK-MODOT (1-888-275-6636)

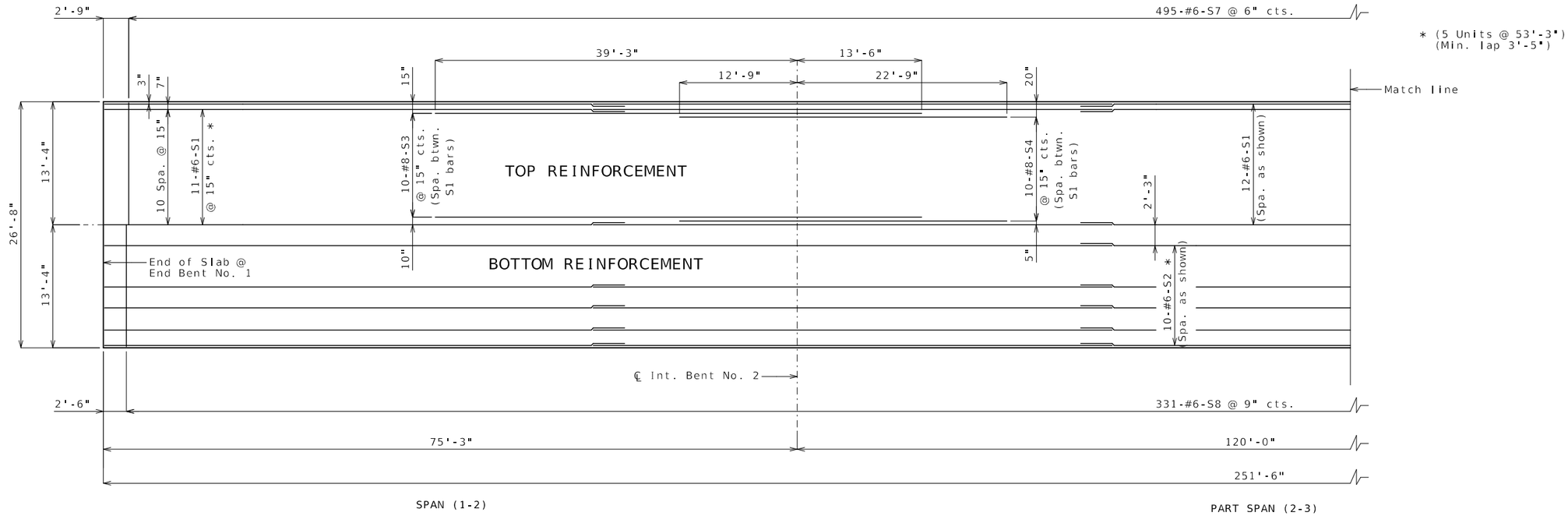

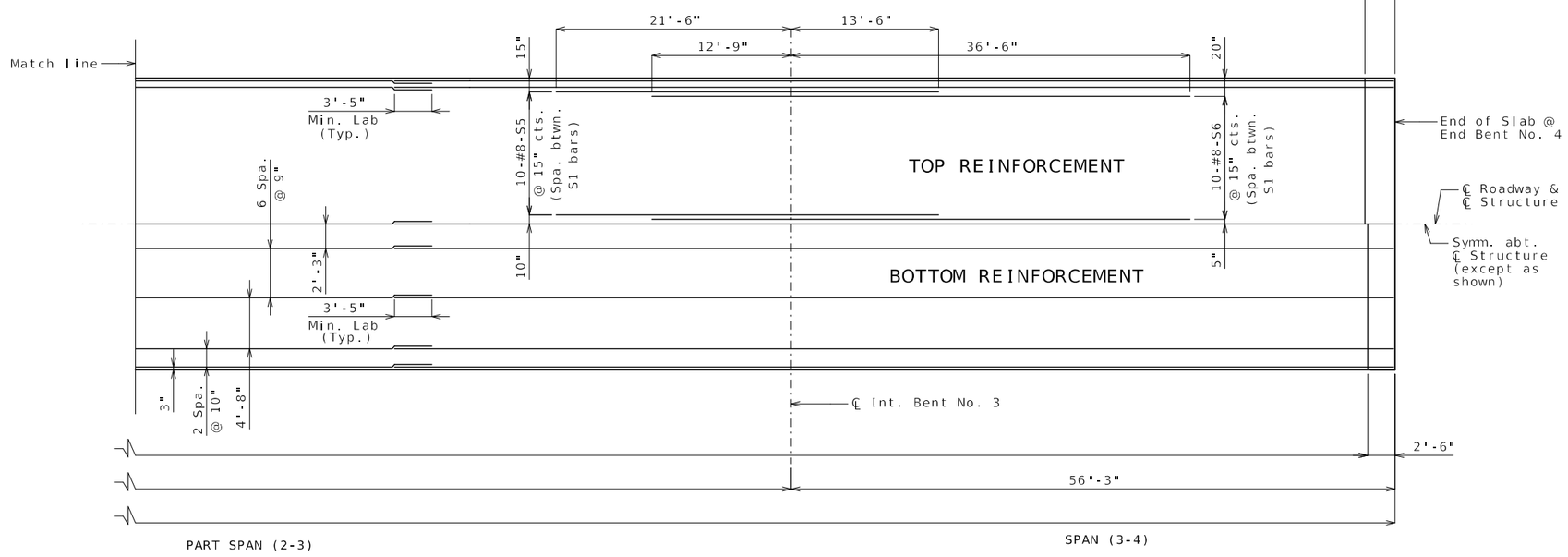

Notes:

Longitudinal dimensions are measured horizontally.

For Slab Details, see Sheet No. 25.

For Theoretical Slab Haunching Diagram and Theoretical Bottom of Slab Elevations, see Sheet No. 23.

For details and reinforcement of Type H Barrier, see Sheets No. 26 & 27.

PLAN OF SLAB SHOWING REINFORCEMENT

Detailed Mar. 2026
Checked May 2026

Note: This drawing is not to scale. Follow dimensions.

STATE OF MISSOURI
TIMOTHY D. LEAF
NUMBER PE-2012000778
PROFESSIONAL ENGINEER
10/06/2026 3:28:54 PM
TIMOTHY D.LEAF - CIVIL
MO-PE-2012000778

DATE PREPARED
10/6/2026

ROUTE	STATE
K	MO
DISTRICT	SHEET NO.
BR	24

COUNTY
KNOX

JOB NO.
JNE0156

CONTRACT ID.

PROJECT NO.

BRIDGE NO.
A9721

DESCRIPTION	DATE

MISSOURI HIGHWAYS AND TRANSPORTATION COMMISSION

105 WEST CAPITOL
JEFFERSON CITY, MO 65102
1-888-ASK-MODOT (1-888-275-6636)

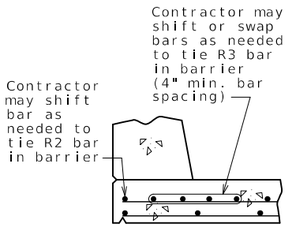

OPTIONAL SHIFTING TOP BARS AT BARRIER

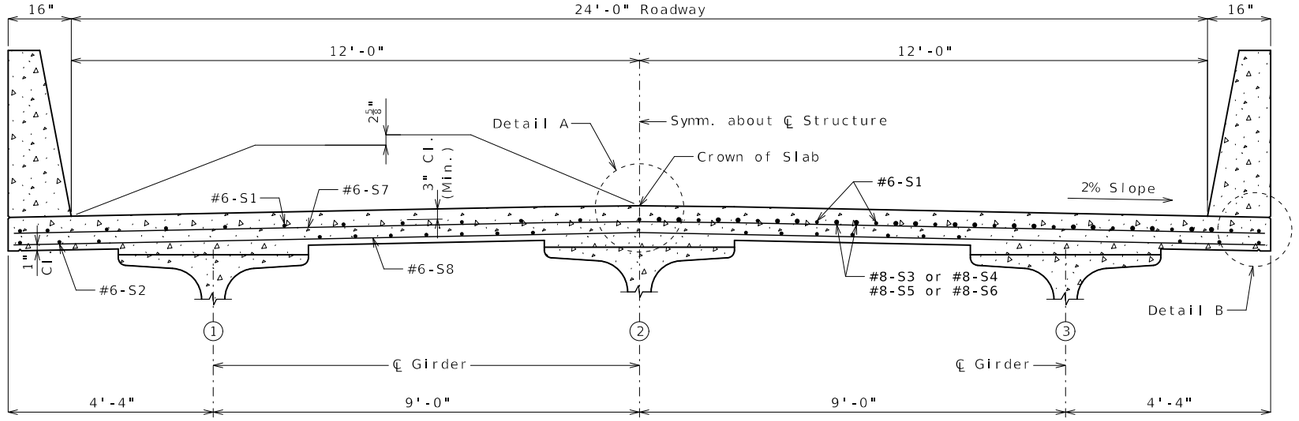

HALF SECTION NEAR MIDSPAN HALF SECTION NEAR INTERMEDIATE BENT

SECTION THRU SLAB

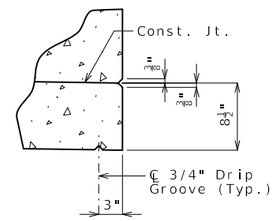

DETAIL B

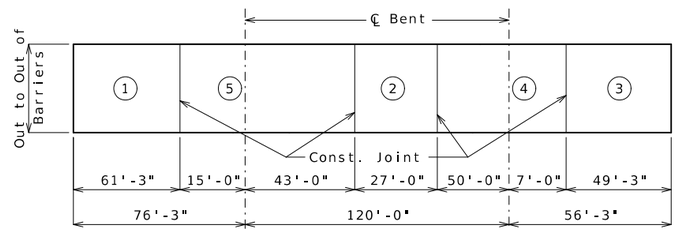

	Sequence of Pours					Min. Rate of Pour Cu. Yds./Hr.
	Direction					With Retarder
Basic Sequence	1	2	3	4	5	25
	Either Direction					
Alternate pours to the basic skip sequence are subject to the approval of the engineer in accordance with Sec 703.						
Alternate A Pours	1	5 + 2		4 + 3		25
	End to 5	1 to 4		2 to End		
Alternate B Pours	1 + 5 + 2			4 + 3		25
	End to 4			2 to End		
Alternate C Pours	1 + 5 + 2 + 4 + 3					25
	End to End					

The contractor shall furnish an approved retarder to retard the set of the concrete to 2.5 hours, and shall pour and satisfactorily finish the slab pours at the rate given.

The concrete diaphragm at the intermediate bents and integral end bents shall be poured a minimum of 30 minutes and a maximum of 2 hours before the slab is poured.

SLAB POURING SEQUENCE

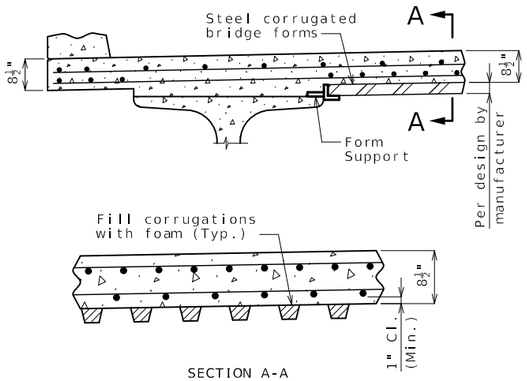

SECTION A-A

OPTIONAL STAY-IN-PLACE FORM DETAILS

Stay-In-Place Forms:

Corrugated steel forms, supports, closure elements and accessories shall be in accordance with grade requirement and coating designation G165 of ASTM A653. Complete shop drawings of the permanent steel deck forms shall be required in accordance with Sec 1080.

Corrugations of stay-in-place forms shall be filled with an expanded polystyrene material. The polystyrene material shall be placed in the forms with an adhesive in accordance with the manufacturer's recommendations.

Form sheets shall not rest directly on the top of girder flanges. Sheets shall be securely fastened to form supports with a minimum bearing length of one inch on each end. Form supports shall be placed in direct contact with the flange. Drilling holes in the girder flanges will not be permitted. All steel fabrication and construction shall be in accordance with Sec 1080 and 712. Certified field welders will not be required for welding of the form supports.

The design of stay-in-place corrugated steel forms is per manufacturer which shall be in accordance with Sec 703 for false work and forms. Maximum actual weight of corrugated steel forms allowed shall be 4 psf assumed for girder loading.

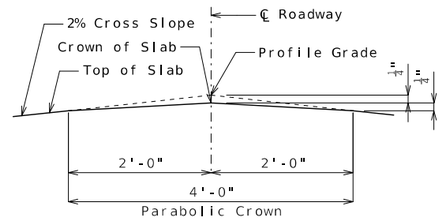

DETAIL A

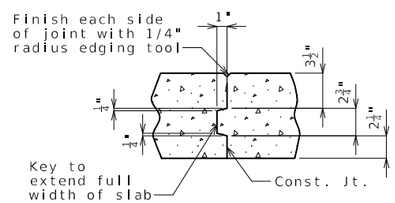

SLAB CONSTRUCTION JOINT

Notes:

For reinforcement of barrier not shown, see Sheet No. 26.

For Theoretical Bottom of Slab Elevations, Girder Camber Diagram and Theoretical Slab Haunching Diagram, see Sheet No. 23.

For Plan of Slab Showing Reinforcement, see Sheet No. 24.

SLAB DETAILS

Detailed Mar. 2026
Checked May 2026

Note: This drawing is not to scale. Follow dimensions.

STATE OF MISSOURI
TIMOTHY D. LEAF
NUMBER PE-2012000778
PROFESSIONAL ENGINEER
10/06/2026 3:29:07 PM
TIMOTHY D. LEAF - CIVIL
MO-PE-2012000778

DATE PREPARED
10/6/2026

ROUTE	STATE
K	MO
DISTRICT	SHEET NO.
BR	25

COUNTY
KNOX

JOB NO.
JNE0156

CONTRACT ID.

PROJECT NO.

BRIDGE NO.
A9721

DESCRIPTION	DATE

MISSOURI HIGHWAYS AND TRANSPORTATION COMMISSION
105 WEST CAPITOL
JEFFERSON CITY, MO 65102
1-888-ASK-MODOT (1-888-275-6636)

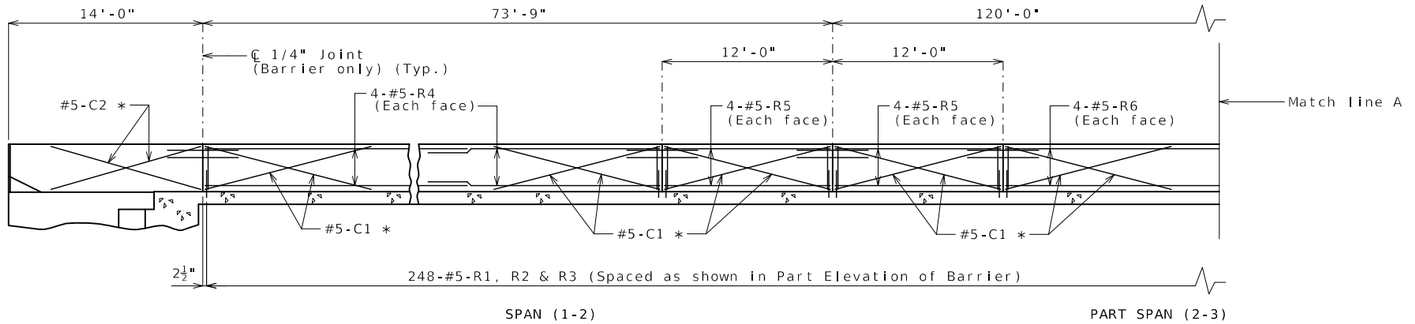

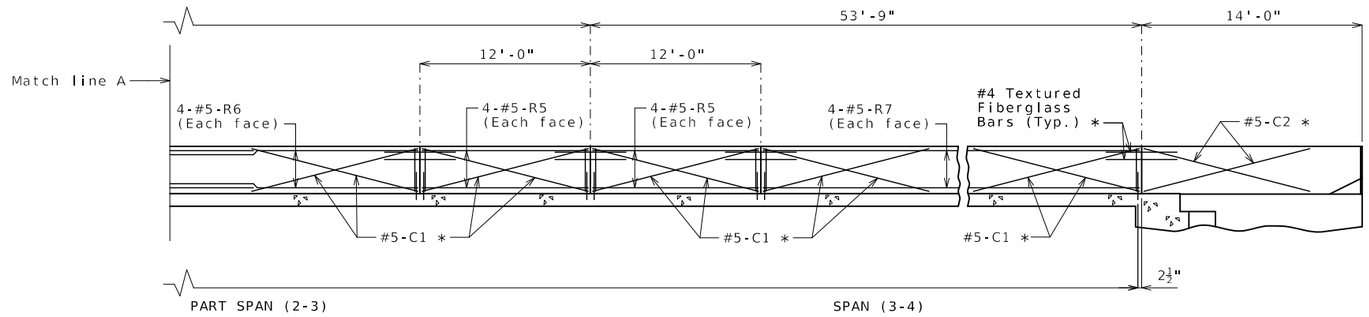

ELEVATION OF BARRIER

(Left barrier shown, right barrier similar)

Longitudinal dimensions are horizontal.

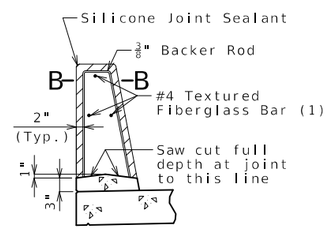

SECTION THRU
SAW CUT JOINT

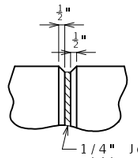

PART ELEVATION
AT FORMED JOINT

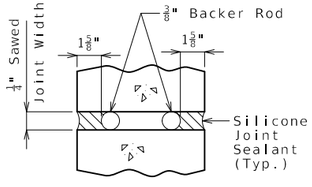

SECTION B-B

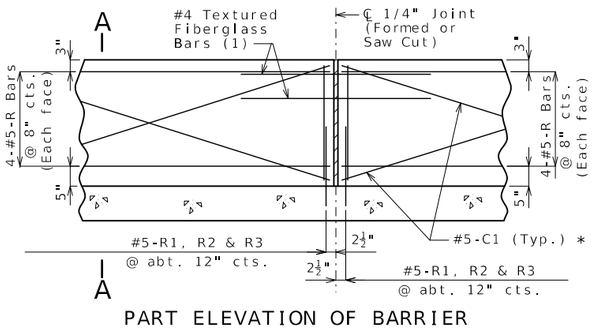

PART ELEVATION OF BARRIER

(1) Four feet long, centered on joint, slip-formed option only

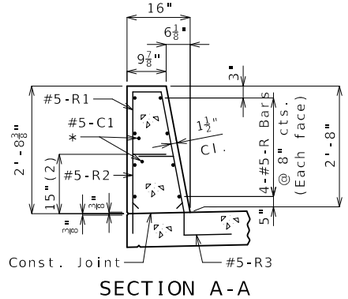

SECTION A-A

Use a minimum lap of 2'-6" for #5 horizontal barrier bars.

The cross-sectional area above the slab is 2.89 square feet.

(2) To top of bar

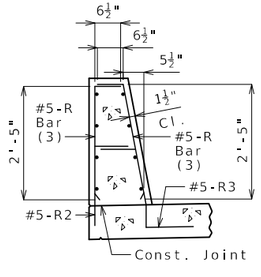

R-BAR PERMISSIBLE ALTERNATE SHAPE

(3) The R1 bar may be separated into two bars as shown, at the contractor's option, only when slip forming is not used. (All dimensions are out to out.)

General Notes:

* Slip-formed option only.

Conventional forming or slip forming may be used. Saw cut joints may be used with conventional forming.

Top of barrier shall be built parallel to grade and barrier joints (except at end bents) normal to grade.

All exposed edges of barrier shall have either a 1/2-inch radius or a 3/8-inch bevel, unless otherwise noted.

Payment for all concrete and reinforcement, complete in place, will be considered completely covered by the contract unit price for Type H Barrier per linear foot.

Concrete in barrier shall be Class B-1.

Measurement of barrier is to the nearest linear foot for each structure, measured along the outside top of slab from end of wing to end of wing.

Concrete traffic barrier delineators shall be placed on top of the barrier as shown on Missouri Standard Plan 617.10 and in accordance with Sec 617. Delineators on bridges with two-lane, two-way traffic shall have retroreflective sheeting on both sides. Concrete traffic barrier delineators will be considered completely covered by the contract unit price for Type H Barrier.

Joint sealant and backer rods shall be in accordance with Sec 717 for silicone joint sealant for saw cut and formed joints.

For slip-formed option, both sides of barrier shall have a vertically broomed finish and the top shall have a transversely broomed finish.

TYPE H BARRIER

STATE OF MISSOURI
TIMOTHY D. LEAF
NUMBER PE-2012000778
PROFESSIONAL ENGINEER
10/06/2026 3:29:17 PM
TIMOTHY D. LEAF - CIVIL
MO-PE-2012000778

DATE PREPARED 10/6/2026

ROUTE	STATE
K	MO
DISTRICT	SHEET NO.
BR	26

COUNTY: KNOX
JOB NO.: JNE0156
CONTRACT ID.:
PROJECT NO.:
BRIDGE NO.: A9721

DATE	DESCRIPTION

MISSOURI HIGHWAYS AND TRANSPORTATION COMMISSION
105 WEST CAPITOL
JEFFERSON CITY, MO 65102
1-888-ASK-MODOT (1-888-275-6636)

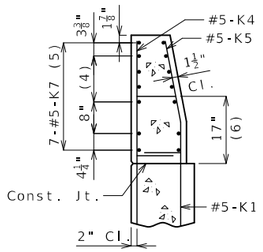

SECTION A-A

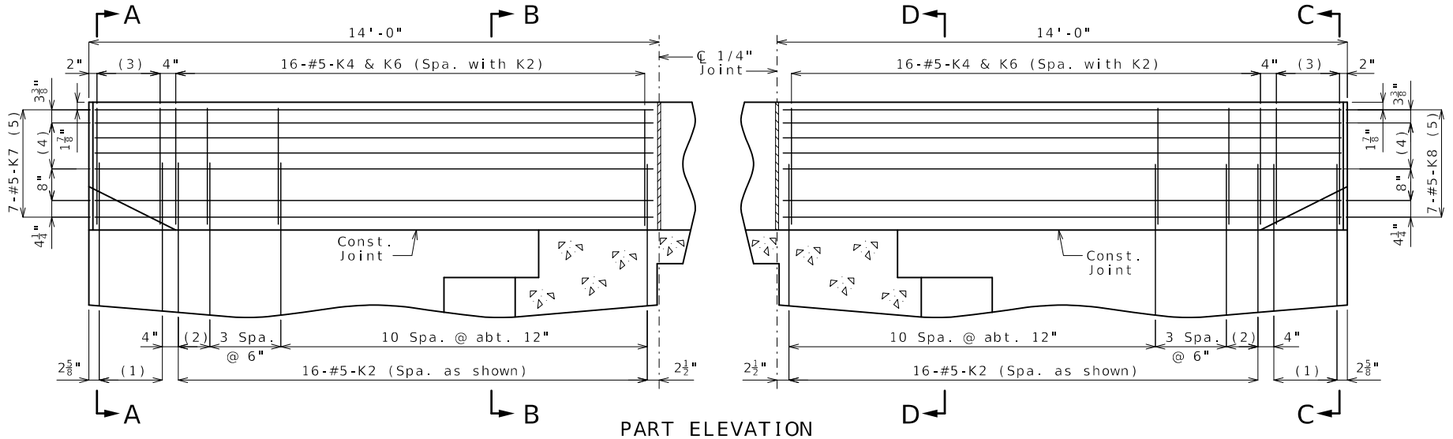

PART ELEVATION

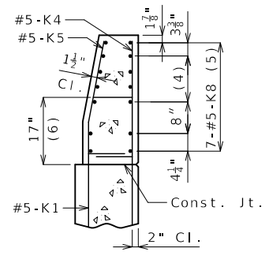

SECTION C-C

(1) 5-#5-K1 @ 4" cts.

(2) 2 Spaces @ 4"

(3) 5-#5-K4 and 5-#5-K5, spaced with K1

(4) 3 Spaces @ $3\frac{13}{16}$"

(5) Spaced as shown, each face

(6) To top of bar

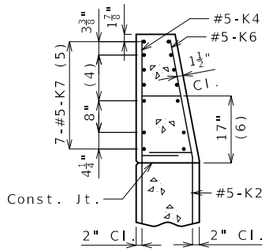

SECTION B-B

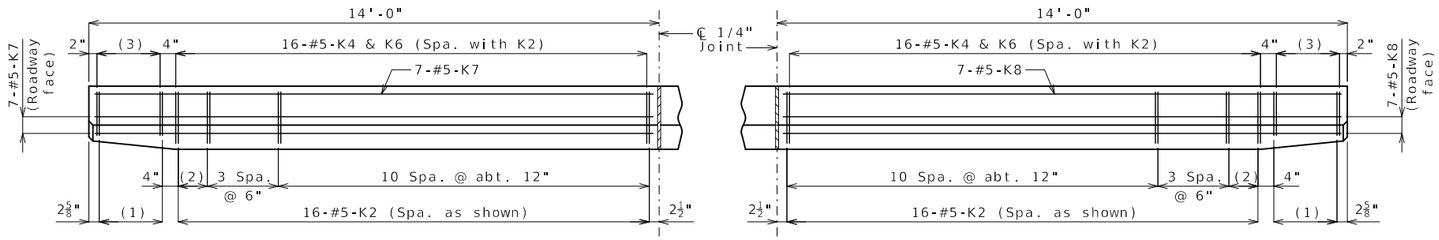

PART PLAN

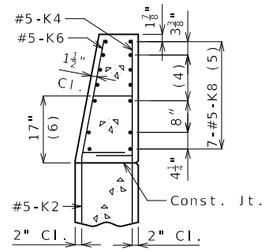

SECTION D-D

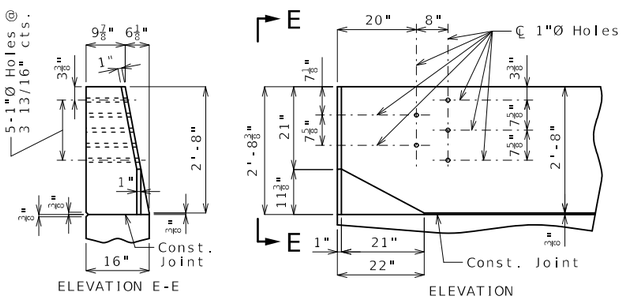

* Transition to zero at Type A curb for gutter lines to match.

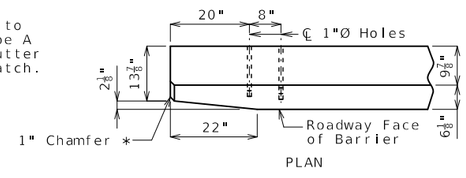

DETAILS OF GUARD RAIL ATTACHMENT

General Notes:

Concrete traffic barrier delineators shall be placed on top of the barrier as shown on Missouri Standard Plan 617.10 and in accordance with Sec 617. Delineators on bridges with two-lane, two-way traffic shall have retroreflective sheeting on both sides. Concrete traffic barrier delineators will be considered completely covered by the contract unit price for Type H Barrier.

Reinforcing Steel:

Minimum clearance to reinforcing steel shall be 1 1/2" except as shown for bars embedded into end bent.

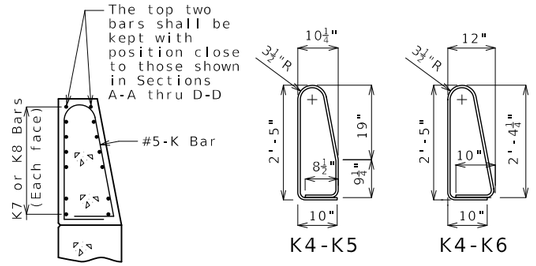

PERMISSIBLE ALTERNATE SHAPES

(Other K bars not shown for clarity)

The K4-K5 and K4-K6 bar combination may be furnished as one bar as shown, at the contractor's option.

All dimensions are out to out.

TYPE H BARRIER AT END BENTS

(Left barrier shown, right barrier similar)

Detailed Mar. 2026
Checked May 2026

Note: This drawing is not to scale. Follow dimensions.

STATE OF MISSOURI
TIMOTHY D. LEAF
NUMBER PE-2012000778
PROFESSIONAL ENGINEER
10/06/2026 2:29:29 PM
TIMOTHY D. LEAF - CIVIL
MO-PE-2012000778

DATE PREPARED: 10/6/2026

ROUTE	STATE
K	MO
DISTRICT	SHEET NO.
BR	27

COUNTY: KNOX
JOB NO.: JNE0156
CONTRACT ID.:
PROJECT NO.:
BRIDGE NO.: A9721

DESCRIPTION	DATE

MISSOURI HIGHWAYS AND TRANSPORTATION COMMISSION
105 WEST CAPITOL
JEFFERSON CITY, MO 65102
1-888-ASK-MODOT (1-888-275-6636)

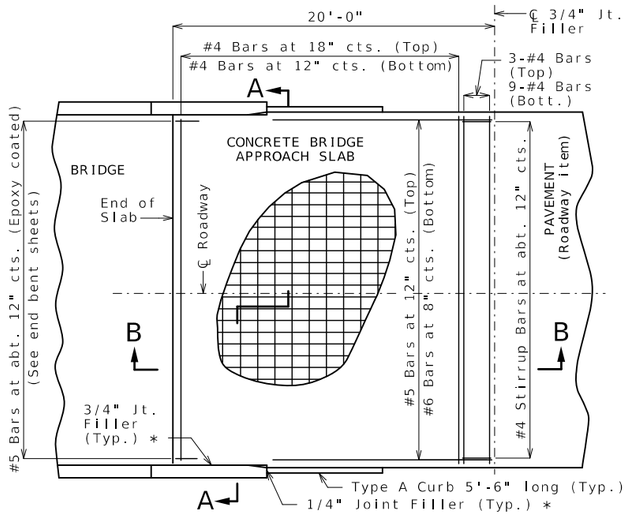

PART PLAN OF SQUARED STRUCTURE
(Skewed structure similar)

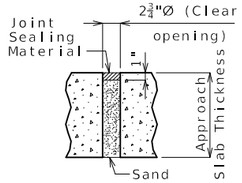

UNDERSEAL ACCESS HOLE DETAIL
(If required)

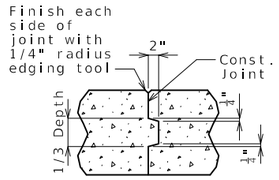

CONSTRUCTION JOINT DETAIL

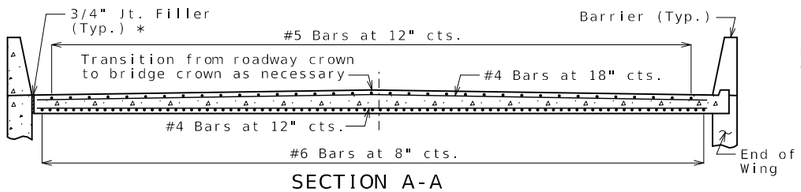

SECTION A-A

With the approval of the engineer, the contractor may crown the bottom of the approach slab to match the crown of the roadway surface.

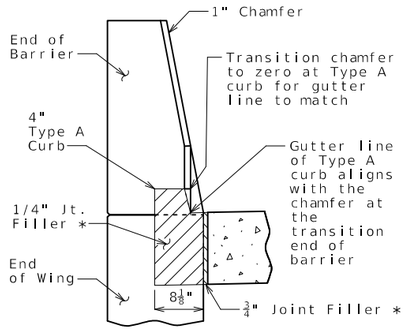

SECTION BETWEEN CURB AND BARRIER

Notes For Concrete Slab Only:

All concrete for the bridge approach slab shall be in accordance with Sec 503 (f'c = 4,000 psi).

The reinforcing steel in the bridge approach slab shall be epoxy coated Grade 60 with fy = 60,000 psi.

Longitudinal construction joints in bridge approach slab shall be aligned with longitudinal construction joints in bridge slab.

Minimum clearance to reinforcing steel shall be 1 1/2", unless otherwise shown.

The reinforcing steel in the bridge approach slab shall be continuous. The transverse reinforcing steel may be made continuous by providing a minimum lap splice of 26 inches for #4 bars, or by mechanical bar splice.

Mechanical bar splices shall be in accordance with Sec 710.

All joint filler shall be in accordance with Sec 1057 for preformed fiber expansion joint filler except as noted.

Payment for furnishing all materials, labor and excavation necessary to construct the concrete bridge approach slab, including the timber header, underdrain, Type 5 aggregate base, joint filler, and all other appurtenances and incidental work as shown on this sheet, complete in place, will be considered completely covered by the contract unit price for Bridge Approach Slab (Minor) per square yard.

See Missouri Standard Plan 609.00 for details of Type A curb.

Drain pipe may be either 6" diameter corrugated metallic-coated pipe underdrain, 4" diameter corrugated polyvinyl chloride (PVC) drain pipe, or 4" diameter corrugated polyethylene (PE) drain pipe.

* Seal joint between vertical face of approach slab and wing with sealant in accordance with Sec 717 for silicone joint sealant for saw cut and formed joints.

General Notes:

Contractor shall have the option to construct either slab except as noted.

The contractor shall pour and satisfactorily finish the bridge slab before placing the bridge approach slab.

MoDOT Construction personnel will indicate the bridge approach slab used for this structure:

☐ Concrete Bridge Approach Slab

☐ Asphalt Bridge Approach Slab

Notes For Asphalt Slab Only:

Payment for furnishing all materials, labor and excavation necessary to construct the asphalt bridge approach slab, including tack, curb, and Type 5 aggregate base within the pay limits shown, complete in place, will be considered completely covered by the contract unit price for Bridge Approach Slab (Minor) per square yard.

Application of tack is required between lifts per Sec 403.

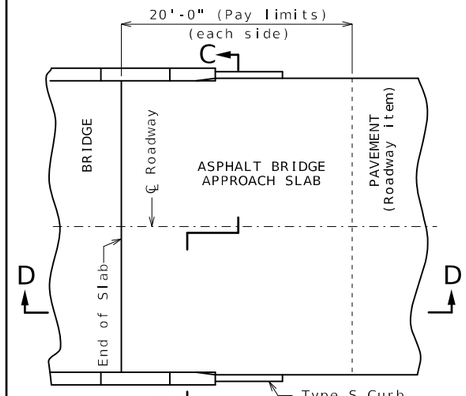

PART PLAN
(Squared structure shown, skewed structure similar)

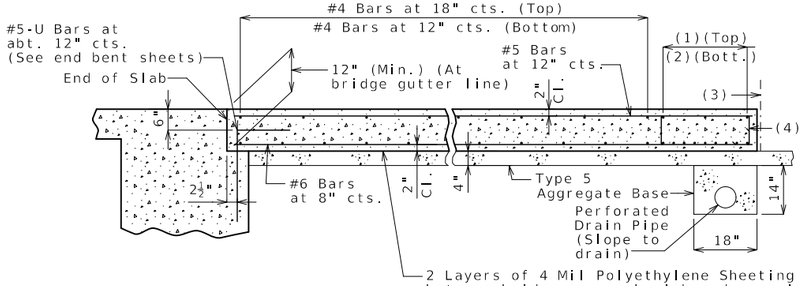

(1) 3-#4 Bars

(2) 9-#4 Bars

(3) ℄ 3/4" Jt. Filler

(4) #4 Stirrup Bars at abt. 12" cts.; 2'-0"x 8" (Min.) out to out; Actual length = 5'-10" (Min.); 90° stirrup hook at bottom; Stirrup height (8") and actual length vary due to crown.

SECTION B-B
(Integral end bent)

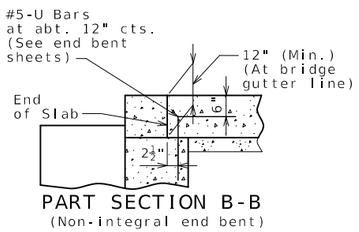

PART SECTION B-B
(Non-integral end bent)

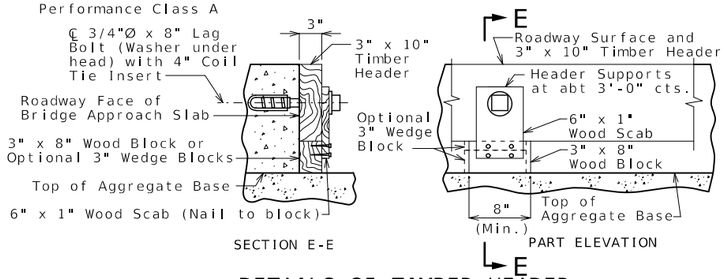

SECTION E-E

PART ELEVATION

DETAILS OF TIMBER HEADER
Remove timber header when concrete pavement is placed.

OPTIONAL CONCRETE SLAB

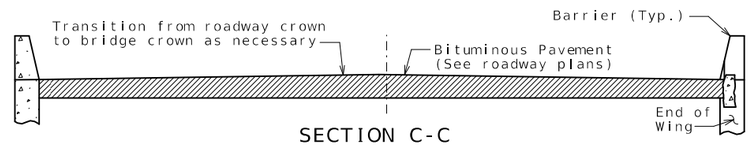

SECTION C-C

With the approval of the engineer, the contractor may crown the bottom of the approach slab to match the crown of the roadway surface.

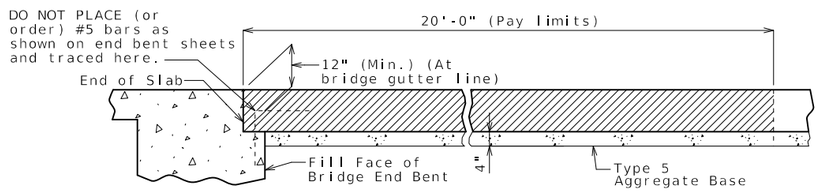

SECTION D-D

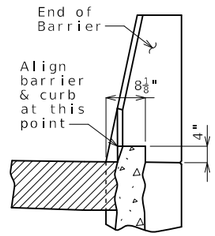

4" TYPE S CURB
See Missouri Standard Plan 609.00 for details of Type S curb.

OPTIONAL ASPHALT SLAB (NOT ALLOWED WITH CONCRETE PAVEMENT)

BRIDGE APPROACH SLAB (MINOR)

Integral end bents shown, non-integral end bent similar.

Detailed Mar. 2026
Checked May 2026

Note: This drawing is not to scale. Follow dimensions.

STATE OF MISSOURI
TIMOTHY D. LEAF
NUMBER PE-2012000778
PROFESSIONAL ENGINEER
10/06/2026 3:29:39 PM
TIMOTHY D. LEAF - CIVIL
MO-PE-2012000778

DATE PREPARED: 10/6/2026

ROUTE	STATE
K	MO
DISTRICT	SHEET NO.
BR	28

COUNTY: KNOX

JOB NO.: JNE0156

CONTRACT ID.:

PROJECT NO.:

BRIDGE NO.: A9721

DESCRIPTION	DATE

MISSOURI HIGHWAYS AND TRANSPORTATION COMMISSION
105 WEST CAPITOL
JEFFERSON CITY, MO 65102
1-888-ASK-MODOT (1-888-275-6636)

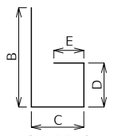

SHAPE 6
or 6S

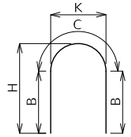

SHAPE 7

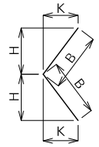

SHAPE 8
or 8S

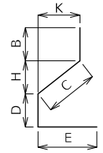

SHAPE 9
or 9S

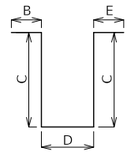

SHAPE 10
or 10S

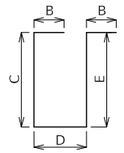

SHAPE 11
or 11S

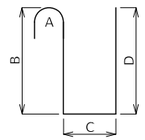

SHAPE 12

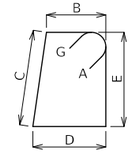

SHAPE 13S

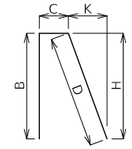

SHAPE 14
or 14S

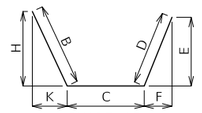

SHAPE 15
or 15S

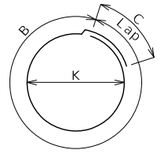

SHAPE 16

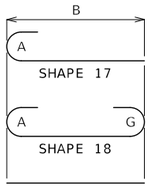

SHAPE 17
SHAPE 18
SHAPE 20

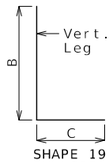

SHAPE 19
or 19S

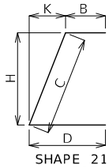

SHAPE 21
or 21S

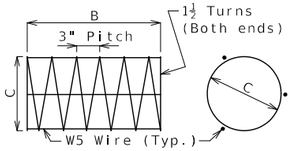

SHAPE 22

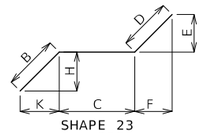

SHAPE 23
or 23S

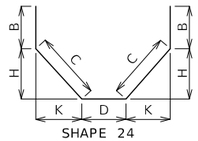

SHAPE 24
or 24S

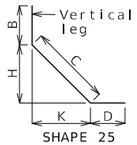

SHAPE 25
or 25S

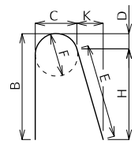

SHAPE 26

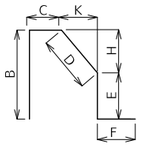

SHAPE 27S

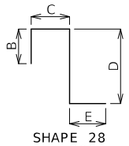

SHAPE 28
or 28S

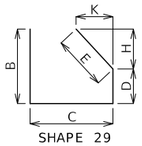

SHAPE 29
or 29S

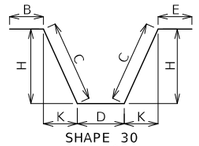

SHAPE 30
or 30S

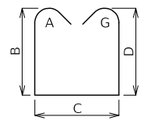

SHAPE 31S

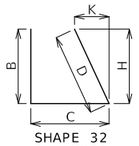

SHAPE 32
or 32S

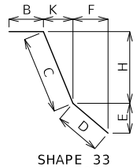

SHAPE 33
or 33S

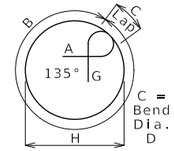

SHAPE 34S

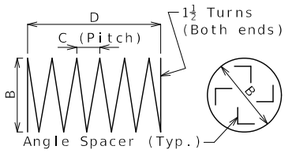

SHAPE 35 (1)

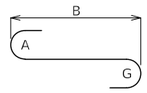

SHAPE 36

Finished Bend Diameters D and Hook Dimensions

Standard Pin Bend Shapes

Size	Case	D	A or G		J
			90°	180°	180°
#4	1	3"	8"	6"	4"
#5	1	3¾"	10"	7"	5"
#6	1	4½"	12"	8¼"	6"
#7	2	5¼"	14"	9¾"	7"
	3	7"	15"	11½"	8¾"
#8	2	6"	16"	11"	8"
	3	8"	17"	13¼"	10"
#9	1	9½"	19¼"	15½"	11¾"
#10	1	10¾"	22"	17½"	13¼"
#11	1	12"	24½"	19½"	14⅞"
#14	1	18¼"	31¼"	27½"	21⅝"
#18	1	24"	41½"	36¾"	28½"

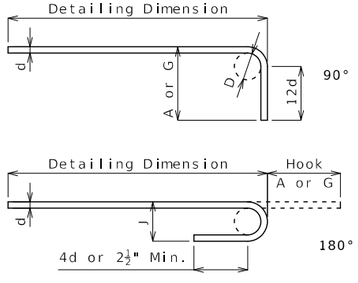

Stirrup Pin Bend Shapes (S)

Size	Case	D	A or G			H	J
			90°	135°	180°	135°	180°
#4	2	2"	4½"	4½"	5"	2⅝"	3"
	3	3"	5"	5¼"	6"	3"	4"
#5	2	2½"	5¾"	5¾"	5¾"	3⅝"	3¾"
	3	3¾"	6¼"	6½"	7"	3⅞"	5"
#6	1	4½"	12"	7¾"	8¼"	4⅝"	6"

Applicable for all grades of steel.

Case 1 applies to all reinforcement. Case 2 applies to all reinforcement except for galvanized bars. Case 3 applies to galvanized bars only.

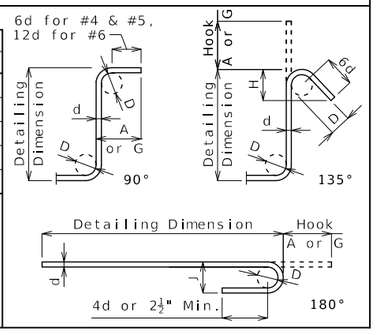

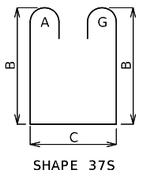

SHAPE 37S

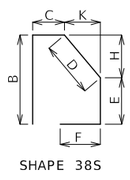

SHAPE 38S

BENDING DIAGRAMS

All dimensions are out to out.

Shapes ending with an S shall be bent in accordance with stirrup pin bend shapes.

Unless otherwise noted, finished bending diameter D is the same for all bends of a shape.

(1) Shall be a deformed or plain spiral bar or wire.

Four angle or channel spacers are required for each column spiral. Spacers are to be placed on inside of spirals. Length and weight of column spirals do not include splices or spacers.

Reinforcing Steel Totals (Pounds)

	Size	Substructure		Superstructure				Entire Bridge	
				Slab					
		Plain	Coated	Plain	Coated	Barrier	Slip Form	Plain	Coated
By Size	W5	0	0	0	0	0	0	0	0
	4	175	0	0	662	0	0	175	662
	5	3,369	0	0	1,626	8,511	589	3,369	10,726
	6	2,491	0	0	56,413	0	0	2,491	56,413
	7	0	0	0	1,296	0	0	0	1,296
	8	3,008	0	0	10,366	0	0	3,008	10,366
	9	0	0	0	0	0	0	0	0
	10	17,717	0	0	0	0	0	17,717	0
	11	0	0	0	0	0	0	0	0
	14	0	0	0	0	0	0	0	0
	18	0	0	0	0	0	0	0	0
By Type		26,760	0	0	70,363	8,511	589	26,760	79,463

All superstructure reinforcing steel shall be Epoxy Coated unless otherwise specified.

STATE OF MISSOURI
TIMOTHY D. LEAF
NUMBER PE-2012000778
PROFESSIONAL ENGINEER
10/06/2026 3:29:50 PM
TIMOTHY D.LEAF - CIVIL
MO-PE-2012000778

DATE PREPARED 10/6/2026

ROUTE	STATE
K	MO
DISTRICT	SHEET NO.
BR	29

COUNTY KNOX

JOB NO. JNE0156

CONTRACT ID.

PROJECT NO.

BRIDGE NO. A9721

DESCRIPTION	DATE

MISSOURI HIGHWAYS AND TRANSPORTATION COMMISSION

105 WEST CAPITOL
JEFFERSON CITY, MO 65102
1-888-ASK-MODOT (1-888-275-6636)

BENDING DIAGRAMS AND REINFORCING STEEL TOTALS

Detailed Aug. 2026
Checked Aug. 2026

Note: This drawing is not to scale. Follow dimensions.

Bill of Reinforcing Steel

No. Req.	Size/ Mark	Location	Codes C	SH	V	Dimensions B ft in.	C ft in.	D ft in.	E ft in.	F ft in.	H ft in.	K ft in.	Nom. Length ft in.	Actual Length ft in.	Weight lb
		SUBSTRUCTURE													
		INT BENT 2													
16	6 D200	BEAM		20		2 6.00							2 6	2 6	60
8	8 H200	BEAM		18		22 5.00							24 3	24 3	518
8	8 H201	BEAM		20		22 5.00							22 5	22 5	479
10	6 H202	BEAM		20		22 5.00							22 5	22 5	337
14	6 H203	BEAM		10S			2 2.00	4 1.00					8 5	8 1	170
128	5 P200	DRILLED SHAFT		16		9 5.00	2 1.00					3 0.00	11 6	11 4	1,513
25	6 U200	BEAM		13S		4 3.00	3 9.00	4 3.00	3 9.00				17 4	16 10	632
18	6 U201	BEAM		10S			3 9.00	4 3.00					11 9	11 5	309
4	4 U202	BEAM		10S			12.00	4 3.00					6 3	6 1	16
60	10 V200	DRILLED SHAFT		20		36 0.00							36 0	36 0	9,294
		INT BENT 3													
16	6 D300	BEAM		20		2 6.00							2 6	2 6	60
8	8 H300	BEAM		18		22 5.00							24 3	24 3	518
8	8 H301	BEAM		20		22 5.00							22 5	22 5	479
10	8 H302	BEAM		20		22 5.00							22 5	22 5	599
14	8 H303	BEAM		10S			2 2.00	3 5.00					7 9	7 9	290
3	8 H304	WEB WALL		18		13 10.00							15 8	15 8	125
20	5 H305	WEB WALL		20		13 4.00							13 4	13 4	278
20	5 P300	COLUMN		16		10 2.50	2 1.00					3 3.00	12 4	12 2	254
112	5 P301	DRILLED SHAFT		16		9 5.00	2 1.00					3 0.00	11 6	11 4	1,324
25	6 U300	BEAM		13S		3 9.00	3 9.00	3 9.00	3 9.00				16 4	15 10	595
18	6 U301	BEAM		10S			3 9.00	3 9.00					11 3	10 11	295
4	6 U302	BEAM		10S			12.00	3 9.00					5 9	5 5	33
20	4 U303	WEB WALL		19S		10 8.00	16.00						12 0	11 11	159
30	10 V300	COLUMN		17		9 8.00							11 1	11 1	1,431
30	10 V301	DRILLED SHAFT		20		54 2.00							54 2	54 2	6,992
		SUPERSTRUCTURE													
		END BENT 1													
20	6 F100	WING BRACE	E	25S		20.25	5 4.00	20.25			3 9.25	3 9.25	8 9	8 8	260
8	6 F101	DIAPHRAGM	E	19S		6 5.00	2 8.00						9 1	8 11	107
12	7 H100	BEAM/DIAPHRAGM	E	20		26 5.00							26 5	26 5	648
4	6 H101	BEAM	E	20		26 5.00							26 5	26 5	159
5	6 H102	DIAPHRAGM	E	20		26 5.00							26 5	26 5	198
8	6 H103	DIAPHRAGM	E	20		8 3.00							8 3	8 3	99
2	6 H104	DIAPHRAGM	E	20		5 6.00							5 6	5 6	17
8	6 H105	DIAPHRAGM	E	20		3 9.00							3 9	3 9	45
2	6 H106	DIAPHRAGM	E	20		2 5.00							2 5	2 5	7
3	5 H107	STRAND TIE	E	20		5 8.00							5 8	5 8	18
16	8 H108	WING	E	20		13 6.00							13 6	13 6	577
40	6 H109	WING	E	20		13 1.00							13 1	13 1	786
12	5 U100	BEAM	E	10S			6 10.00	2 9.00					16 5	16 2	202
21	4 U101	BEAM	E	13S		2 9.00	2 8.00	2 9.00	2 8.00				11 7	11 4	159
18	5 U102	DIAPHRAGM	E	10S			4 9.00	2 3.00					11 9	11 6	216
18	6 U103	DIAPHRAGM	E	19S		3 9.00	2 9.00						6 6	6 4	171
32	6 U104	DIAPHRAGM	E	19S		3 5.00	4 9.00						8 2	8 0	385
24	5 U105	APPROACH NOTCH	E	19S		2 0.00	15.00						3 3	3 2	79
12	5 V100	BEAM	E	20		6 10.00							6 10	6 10	86
15	6 V101	DIAPHRAGM	E	20		3 9.00							3 9	3 9	84
4	6 V102	WING	E	20		7 8.00							7 8	7 8	46
44	6 V103	WING	E	20	4	7 8.00							7 8	7 8	
		Incr. = 0.250"				7 11.00							7 11	7 11	515
		END BENT 4													

Bill of Reinforcing Steel

No. Req.	Size/ Mark	Location	Codes C	SH	V	Dimensions B ft in.	C ft in.	D ft in.	E ft in.	F ft in.	H ft in.	K ft in.	Nom. Length ft in.	Actual Length ft in.	Weight lb
20	6 F400	WING BRACE	E	25S		20.25	5 4.00	2.25			3 9.25	3 9.25	7 3	7 2	215
8	6 F401	DIAPHRAGM	E	19S		6 5.00	2 8.00						9 1	8 11	107
12	7 H400	BEAM/DIAPHRAGM	E	20		26 5.00							26 5	26 5	648
4	6 H401	BEAM	E	20		26 5.00							26 5	26 5	159
5	6 H402	DIAPHRAGM	E	20		26 5.00							26 5	26 5	198
8	6 H403	DIAPHRAGM	E	20		8 3.00							8 3	8 3	99
2	6 H404	DIAPHRAGM	E	20		5 6.00							5 6	5 6	17
8	6 H405	DIAPHRAGM	E	20		3 9.00							3 9	3 9	45
2	6 H406	DIAPHRAGM	E	20		2 5.00							2 5	2 5	7
3	5 H407	STRAND TIE	E	20		5 8.00							5 8	5 8	18
16	8 H408	WING	E	20		13 6.00							13 6	13 6	577
40	6 H409	WING	E	20		13 1.00							13 1	13 1	786
12	5 U400	BEAM	E	10S			6 10.00	2 9.00					16 5	16 2	202
21	4 U401	BEAM	E	13S		2 9.00	2 8.00	2 9.00	2 8.00				11 7	11 4	159
18	5 U402	DIAPHRAGM	E	10S			4 9.00	2 3.00					11 9	11 6	216
18	6 U403	DIAPHRAGM	E	19S		3 9.00	2 9.00						6 6	6 4	171
32	6 U404	DIAPHRAGM	E	19S		3 5.00	4 9.00						8 2	8 0	385
24	5 U405	APPROACH NOTCH	E	19S		2 0.00	15.00						3 3	3 2	79
12	5 V400	BEAM	E	20		6 10.00							6 10	6 10	86
15	6 V401	DIAPHRAGM	E	20		3 9.00							3 9	3 9	84
4	6 V402	WING	E	20		7 8.00							7 8	7 8	46
44	6 V403	WING	E	20	4	7 8.00							7 8	7 8	
		Incr. = 0.250"				7 11.00							7 11	7 11	515
		INT DIAPHRAGMS													
8	6 H500	DIAPHRAGM	E	20		7 11.00							7 11	7 11	95
24	4 H501	DIAPHRAGM	E	20		8 3.00							8 3	8 3	132
8	6 H502	DIAPHRAGM	E	20		5 6.50							5 7	5 7	67
4	5 H503	STRAND TIE	E	20		5 8.50							5 9	5 9	24
8	5 H504	STRAND TIE	E	20		4 6.75							4 7	4 7	38
40	4 U500	DIAPHRAGM	E	28S			2 0.00	4 10.00	15.00				8 1	7 11	212
16	6 U501	DIAPHRAGM	E	28S			2 0.00	4 10.00	22.00				8 8	8 4	200
32	6 U502	DIAPHRAGM	E	28S			2 0.00	4 2.00	22.00				8 0	7 8	368
8	5 U503	DIAPHRAGM	E	19S		15.25	4 5.00						5 8	5 7	47
32	5 U504	DIAPHRAGM	E	11S	1		4 6.00	13.50	16.00				7 0	6 9	
		Incr. = 0.250"					4 9.00	13.50	19.00				7 6	7 3	234
16	5 V500	DIAPHRAGM	E	20		4 10.00							4 10	4 10	81
		SLAB													
115	6 S1	SLAB	E	20		53 3.00							53 3	53 3	9,198
100	6 S2	SLAB	E	20		53 3.00							53 3	53 3	7,998
20	8 S3	SLAB	E	20		52 9.00							52 9	52 9	2,817
20	8 S4	SLAB	E	20		35 6.00							35 6	35 6	1,896
20	8 S5	SLAB	E	20		35 0.00							35 0	35 0	1,869
20	8 S6	SLAB	E	20		49 3.00							49 3	49 3	2,630
495	6 S7	SLAB	E	20		26 5.00							26 5	26 5	19,641
331	6 S8	SLAB	E	20		26 5.00							26 5	26 5	13,133
		BARRIER													
		TYPE H													
40	5 C1	SLIP FORM	E	20		12 0.00							12 0	12 0	501
8	5 C2	SLIP FORM	E	20		10 6.00							10 6	10 6	88
20	5 K1	BARRIER	E	27S		3 5.00	9.25	5.25	2 11.75		5.25	1.00	7 7	7 5	155
64	5 K2	BARRIER	E	27S		3 5.00	9.25	14.50	2 2.75		14.25	2.75	7 8	7 5	495
84	5 K4	BARRIER	E	19S		2 5.00	10.00						3 3	3 2	277
20	5 K5	BARRIER	E	38S				19.25	9.50	8.25	18.75	4.25	3 1	3 0	63
64	5 K6	BARRIER	E	21S			2 5.00	10.00			2 4.25	6.00	3 3	3 2	211
28	5 K7	BARRIER	E	20		13 0.00							13 0	13 0	380
28	5 K8	BARRIER	E	20		13 0.00							13 0	13 0	380
248	5 R1	BARRIER	E	14S		2 5.00	6.50	2 5.50			2 5.00	5.50	5 5	5 3	1,358
248	5 R2	BARRIER	E	19S		20.50	9.50						2 6	2 5	625
248	5 R3	BARRIER	E	27S			9.50	15.25	5.00	12.00	15.00	3.00	3 6	3 4	862
16	5 R4	BARRIER	E	20		33 0.00							33 0	33 0	551
64	5 R5	BARRIER	E	20		11 9.00							11 9	11 9	784

Nominal lengths are based on out to out dimensions shown in bending diagrams and are listed to the nearest inch for fabricator's use. Actual lengths are measured along centerline bar to the nearest inch. Weights are based on actual lengths.

For bending diagrams and steel reinforcing totals, see Sheet No. 29.

Detailed Aug. 2026
Checked Aug. 2026

Reinforcing steel (ASTM A706 Grade 60) fy = 60,000 psi

Codes: C = Required coatings, where E = Epoxy Coated and G = Galvanized.

SH = Required shape, see bending diagrams.

V = Sets of varied bars and number of bars of each length. Bar dimensions vary in equal increments between dimensions shown on this line and the following line and the actual length dimension shown on this line and the following line vary by the specified increment.

BILL OF REINFORCING STEEL

Note: This drawing is not to scale. Follow dimensions.

STATE OF MISSOURI
TIMOTHY D. LEAF
NUMBER PE-2012000778
PROFESSIONAL ENGINEER
10/06/2026 3:30:03 PM
TIMOTHY D. LEAF - CIVIL
MO-PE-2012000778

DATE PREPARED
10/6/2026

ROUTE	STATE
K	MO
DISTRICT	SHEET NO.
BR	30

COUNTY
KNOX

JOB NO.
JNE0156

CONTRACT ID.

PROJECT NO.

BRIDGE NO.
A9721

DESCRIPTION	DATE

MISSOURI HIGHWAYS AND TRANSPORTATION COMMISSION
105 WEST CAPITOL
JEFFERSON CITY, MO 65102
1-888-ASK-MODOT (1-888-275-6636)

Bill of Reinforcing Steel

No. Req.	Size/ Mark	Location	Codes C	Codes SH	Codes V	Dimensions B ft in.	C ft in.	D ft in.	E ft in.	F ft in.	H ft in.	K ft in.	Nom. Length ft in.	Actual Length ft in.	Weight lb
32	5 R6	BARRIER	E	20		50 0.00							50 0	50 0	1,669
16	5 R7	BARRIER	E	20		42 0.00							42 0	42 0	701

Bill of Reinforcing Steel

No. Req.	Size/ Mark	Location	Codes C	Codes SH	Codes V	Dimensions B ft in.	C ft in.	D ft in.	E ft in.	F ft in.	H ft in.	K ft in.	Nom. Length ft in.	Actual Length ft in.	Weight lb

Nominal lengths are based on out to out dimensions shown in bending diagrams and are listed to the nearest inch for fabricator's use. Actual lengths are measured along centerline bar to the nearest inch. Weights are based on actual lengths.

For bending diagrams and steel reinforcing totals, see Sheet No. 29.

Detailed Aug. 2026
Checked Aug. 2026

Reinforcing steel (ASTM A706 Grade 60) fy = 60,000 psi

Note: This drawing is not to scale. Follow dimensions.

Codes: C = Required coatings, where E = Epoxy Coated and G = Galvanized.

SH = Required shape, see bending diagrams.

V = Sets of varied bars and number of bars of each length. Bar dimensions vary in equal increments between dimensions shown on this line and the following line and the actual length dimension shown on this line and the following line vary by the specified increment.

BILL OF REINFORCING STEEL

STATE OF MISSOURI
TIMOTHY D. LEAF
NUMBER PE-2012000778
PROFESSIONAL ENGINEER
10/06/2026 3:31:20 PM
TIMOTHY D. LEAF - CIVIL
MO-PE-2012000778

DATE PREPARED
10/6/2026

ROUTE	STATE
K	MO

DISTRICT	SHEET NO.
BR	31

COUNTY
KNOX

JOB NO.
JNE0156

CONTRACT ID.

PROJECT NO.

BRIDGE NO.
A9721

DESCRIPTION	DATE

MISSOURI HIGHWAYS AND TRANSPORTATION COMMISSION
105 WEST CAPITOL
JEFFERSON CITY, MO 65102
1-888-ASK-MODOT (1-888-275-6636)

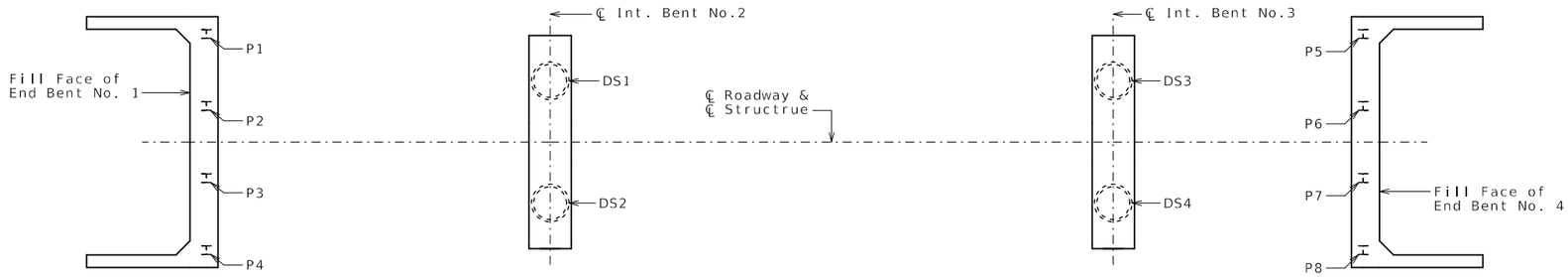

PART PLAN SHOWING PILE NUMBERING FOR RECORDING AS-BUILT PILE DATA & DRILLED SHAFT DATA

As-Built Pile Data

Pile No.	Length in Place (ft)	PDA Nom. Axial Compressive Resistance (kips)	PDA End of Drive Blow Count (blows/in.)	Actual End of Drive Blow Count (blows/in.)	Remarks
					End Bent No. 1
P1					
P2					
P3					
P4					
					End Bent No. 4
P5					
P6					
P7					
P8					

As-Built Drilled Shaft Data

Shaft No.	Top of Sound Rock (Elev.)	Tip of Casing (Elev.)	Bottom of Rock Socket (Elev.)	Remarks
				Int. Bent No. 2
DS1				
DS2				
				Int. Bent No. 3
DS3				
DS4				

Note:
Indicate in remarks column:
A. Pile type and grade
B. Batter
C. Driven to practical refusal
D. PDA test pile
E. Minimum tip elevation controlled
(Use when actual blow count is less than PDA blow count due to minimum tip elevation requirement. A plus sign (+) shall be placed after the PDA nominal axial compressive resistance value indicating actual value is higher than PDA value.)

This sheet to be completed by MoDOT construction personnel.

AS-BUILT PILE AND DRILLED SHAFT DATA

STATE OF MISSOURI
TIMOTHY D. LEAF
NUMBER PE-2012000778
PROFESSIONAL ENGINEER
10/06/2026 3:31:30 PM
TIMOTHY D LEAF - CIVIL
MO-PE-2012000778

DATE PREPARED: 10/6/2026
ROUTE: K | STATE: MO
DISTRICT: BR | SHEET NO.: 32
COUNTY: KNOX
JOB NO.: JNE0156
CONTRACT ID.:
PROJECT NO.:
BRIDGE NO.: A9721

DESCRIPTION | DATE

MISSOURI HIGHWAYS AND TRANSPORTATION COMMISSION
105 WEST CAPITOL
JEFFERSON CITY, MO 65102
1-888-ASK-MODOT (1-888-275-6636)

MoDOT-Geotechnical Section
1617 Missouri Blvd
Jefferson City, MO 65109

SUBSURFACE DIAGRAM

PROJECT NAME Bridge Replacement
PROJECT LOCATION Over Middle Fabius River
CLIENT
PROJECT NUMBER NE0156-A9721

USCS Low Plasticity Clay; USCS Low Plasticity Silty Clay; USCS Clayey Sand; Shale; Concrete; No Core; Boulders and cobbles; USCS Low Plasticity Sandy Clay; USCS Poorly-graded Sand; Limestone; Sandstone; Highly Weathered Limestone

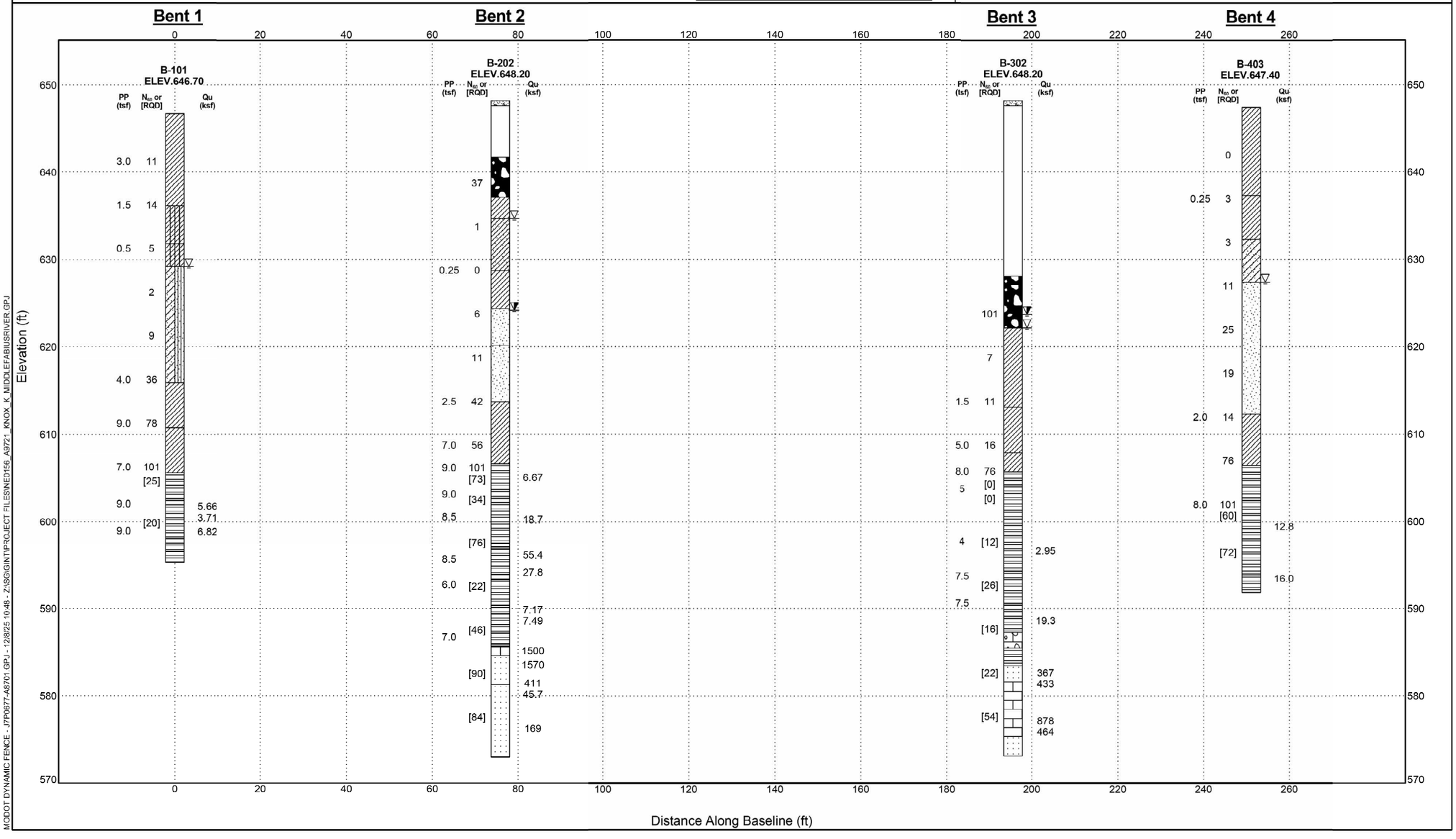

MODOT DYNAMIC FENCE - JTP0677-A8701.GPJ - 12/8/25 10:48 - Z:\SG\GINT\PROJECT FILES\NE0156_A9721_KNOX_K_MIDDLEFABIUSRIVER.GPJ

BORING DATA

Note: For locations of borings, see Sheet No. 1.

Note: This drawing is not to scale. Follow dimensions.

Detailed Mar. 2026
Checked Aug. 2026

STATE OF MISSOURI
TIMOTHY D. LEAF
NUMBER PE-2012000778
PROFESSIONAL ENGINEER
10/06/2026 3:31:41 PM
TIMOTHY D. LEAF - CIVIL
MO-PE-2012000778

DATE PREPARED 10/6/2026
ROUTE K | STATE MO
DISTRICT BR | SHEET NO. 33
COUNTY KNOX
JOB NO. JNE0156
CONTRACT ID.
PROJECT NO.
BRIDGE NO. A9721

DESCRIPTION | DATE

MISSOURI HIGHWAYS AND TRANSPORTATION COMMISSION
105 WEST CAPITOL
JEFFERSON CITY, MO 65102
1-888-ASK-MODOT (1-888-275-6636)