DESIGN DESIGNATION

A.A.D.T. - 2027 = 955
A.A.D.T. - 2047 = 1415
D.H.V. = 17.91%
T = 10.92%
V = 55 M.P.H.
D = 51.0% / 49.0%

FUNCTIONAL CLASSIFICATION- MAJOR COLLECTOR

THIS IS AN EXISTING NORMAL ACCESS RIGHT OF WAY.

NO ADDITIONAL RIGHT OF WAY WILL BE ACQUIRED FOR THIS PROJECT

CONVENTIONAL SYMBOLS
(USED IN PLANS)

	EXISTING	NEW
BUILDINGS AND STRUCTURES		
GUARD RAIL		
GUARD CABLE		
CONCRETE RIGHT-OF-WAY MARKER		
STEEL RIGHT-OF-WAY MARKER		
LOCATION SURVEY MARKER		
UTILITIES		
FIBER OPTICS	-FO-	-FO-
OVERHEAD CABLE TV	-OTV-	-OTV-
UNDERGROUND CABLE TV	-UTV-	-UTV-
OVERHEAD TELEPHONE	-OT-	-OT-
UNDERGROUND TELEPHONE	-UT-	-UT-
OVERHEAD POWER	-OE-	-OE-
UNDERGROUND POWER	-UE-	-UE-
SANITARY SEWER	-S-	-S-
STORM SEWER	-SS-	-SS-
GAS	-G-	-G-
WATER	-W-	-W-
MANHOLE (SAN)		
FIRE HYDRANT (HYD)		
WATER VALVE (WV)		
WATER METER (WM)		
DROP INLET		
DITCH BLOCK		
GROUND MOUNTED SIGN (SIGN)		
LIGHT POLE		
H-FRAME POWER POLE		
TELEPHONE PEDESTAL (PED)		
FENCE		
CHAIN LINK		-V-
WOVEN WIRE		-X-
GATE POST		
BENCHMARK (BM)		

NOTE: DASHED OR OPEN SYMBOLS INDICATE EXISTING FEATURES

MISSOURI HIGHWAYS AND TRANSPORTATION COMMISSION
PLANS FOR PROPOSED
STATE HIGHWAY
CAPE GIRARDEAU COUNTY



GRADING, PAVEMENT & BRIDGE REPLACEMENT
BRIDGE A9778
701.76 FEET
(0.133 MILES)

BEGIN PROJECT STA. 104+91.61
END PROJECT STA. 111+93.37

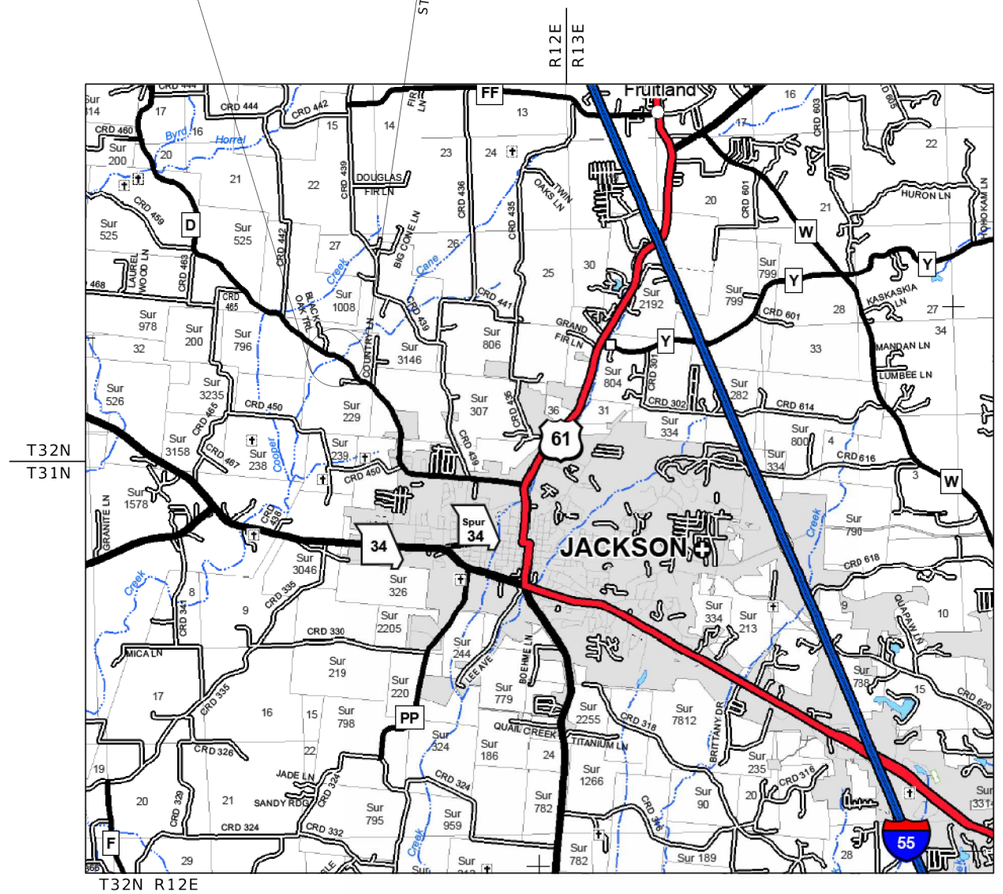

T32N R12E

NOT TO SCALE

THE EXISTENCE AND APPROXIMATE LOCATION OF UTILITY FACILITIES KNOWN TO EXIST, AS SHOWN ON THE PLANS, ARE BASED ON THE BEST INFORMATION AVAILABLE TO THE COMMISSION AT THIS TIME. THIS INFORMATION IS PROVIDED BY THE COMMISSION "AS-IS" AND THE COMMISSION EXPRESSLY DISCLAIMS ANY REPRESENTATION OR WARRANTY AS TO THE COMPLETENESS, ACCURACY, OR SUITABILITY OF THE INFORMATION FOR ANY USE. RELIANCE UPON THIS INFORMATION IS DONE AT THE RISK AND PERIL OF THE USER, AND THE COMMISSION SHALL NOT BE LIABLE FOR ANY DAMAGES THAT MAY ARISE FROM ANY ERROR IN THE INFORMATION. IT IS, THEREFORE, THE RESPONSIBILITY OF THE CONTRACTOR TO VERIFY THE EXISTENCE, LOCATION AND STATUS OF ANY FACILITY. SUCH VERIFICATION INCLUDES DIRECT CONTACT WITH THE LISTED UTILITIES.

INDEX OF SHEETS

DESCRIPTION	SHEET NUMBER
TITLE SHEET	1
TYPICAL SECTIONS (TS) (2 SHEETS)	2
QUANTITIES (QU) (3 SHEETS)	3
PLAN-PROFILE (PP)	4
COORDINATE & REFERENCE POINTS (CP)	5
SPECIAL SHEETS (SS)	6-9
TRAFFIC CONTROL SHEETS (TC)	10-11
EROSION CONTROL SHEETS (EC)	12
PAVEMENT MARKING (PM)	13
CULVERT SECTIONS (CS)	14
BRIDGE DRAWINGS (B)	
A9778	1-22
CROSS SECTIONS (XS)	1-9

LENGTH OF PROJECT

BEGINNING OF PROJECT	STA.	104 + 91.61
END OF PROJECT	STA.	111 + 93.37
APPARENT LENGTH		701.76 FEET
EQUATIONS AND EXCEPTIONS:		NONE
TOTAL CORRECTIONS		0.00 FEET
NET LENGTH OF PROJECT		701.76 FEET
STATE LENGTH		0.133 MILES
FOR INFORMATION ONLY ESTIMATED DISTURBED ACRES		0.97 ACRES

STATE OF MISSOURI
MELISSA ANN WILBERS
NUMBER PE-2007002853
PROFESSIONAL ENGINEER
THIS SHEET HAS BEEN SIGNED, SEALED AND DATED ELECTRONICALLY.

DATE PREPARED: 11/4/2026
ROUTE: D | STATE: MO
DISTRICT: SE | SHEET NO.: 1
COUNTY: CAPE GIRARDEAU
JOB NO.: J9S3773
CONTRACT ID.:
PROJECT NO.:
BRIDGE NO.: A9778

DESCRIPTION | DATE

MISSOURI HIGHWAYS AND TRANSPORTATION COMMISSION
105 WEST CAPITOL
JEFFERSON CITY, MO 65102
1-888-ASK-MODOT (1-888-275-6636)

Bartlett & West
601 MONROE ST. SUITE 201 - JEFFERSON CITY, MO 65101
PHONE 573-634-3181
CERTIFICATE OF AUTHORITY NO. 000167 - ENGINEERING
WWW.BARTLETTWEST.COM

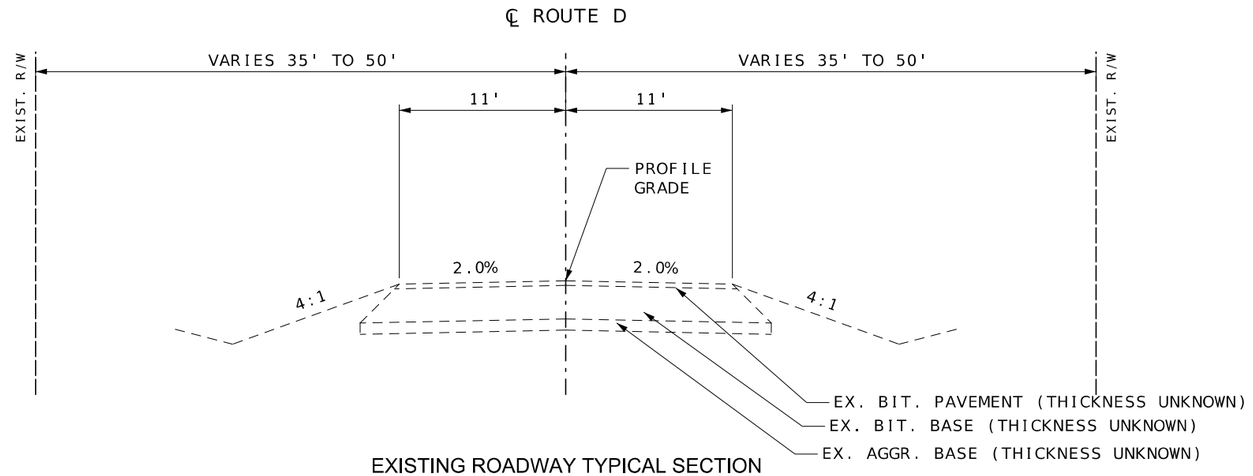

EXISTING ROADWAY TYPICAL SECTION

STA. 104+91.61 TO STA. 111+93.37

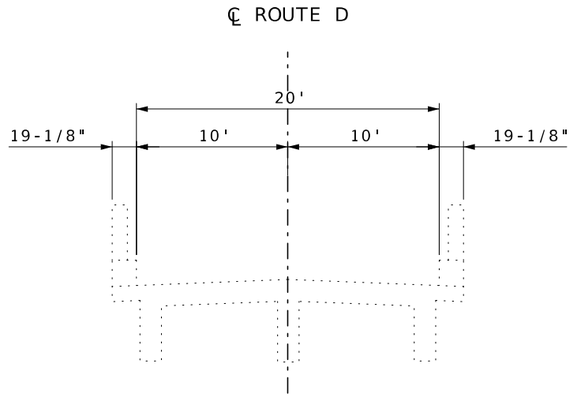

EXISTING BRIDGE TYPICAL SECTION

STA. 104+91.61 TO STA. 111+93.37

TYPICAL SECTIONS
SHEET 1 OF 2

STATE OF MISSOURI
MELISSA ANN WILBERS
NUMBER PE-2007002853
PROFESSIONAL ENGINEER
THIS SHEET HAS BEEN SIGNED, SEALED AND DATED ELECTRONICALLY.

DATE PREPARED: 11/4/2026
ROUTE: D | STATE: MO
DISTRICT: SE | SHEET NO.: 2
COUNTY: CAPE GIRARDEAU
JOB NO.: J9S3773
CONTRACT ID.:
PROJECT NO.:
BRIDGE NO.: A9778

DESCRIPTION | DATE | REV.

MISSOURI HIGHWAYS AND TRANSPORTATION COMMISSION
105 WEST CAPITOL
JEFFERSON CITY, MO 65102
1-888-ASK-MODOT (1-888-275-6636)

Bartlett & West
601 MONROE ST. SUITE 201 - JEFFERSON CITY, MO 65101
PHONE 573-634-3181
CERTIFICATE OF AUTHORITY NO. 000167 - ENGINEERING
WWW.BARTLETTWEST.COM

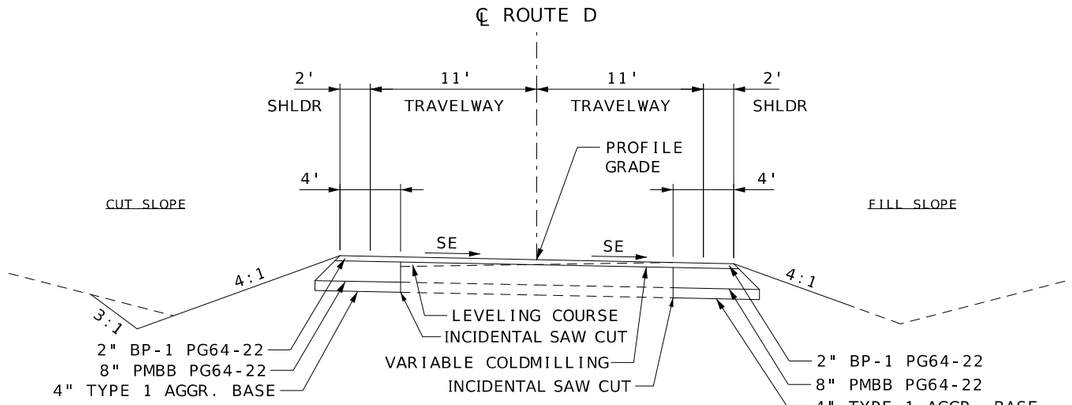

PROPOSED ROADWAY TYPICAL SECTION

STA. 104+91.61 TO STA. 108+32.58

BARN ROOF FORESLOPE

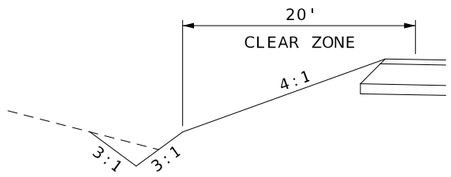

STA 105+81.67 LT TO STA. 107+37.90 LT

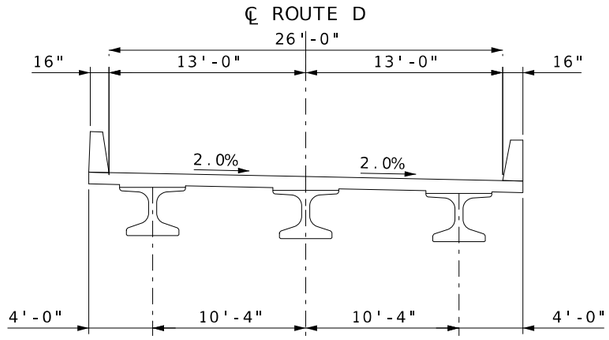

BRIDGE TYPICAL SECTION

STA. 108+32.58 TO STA. 109+14.04

OPTIONAL PAVEMENT (20' BEYOND BRIDGE)	
CONCRETE PAVEMENT 8 IN. NON-REINFORCED, 15' JOINTS ON 4" TYPE 1 AGGREGATE BASE	ASPHALT PAVEMENT 2 IN. BIT. PVM'T BP-1 PG 58-28H ON 8 IN. BIT. BASE PG 64-22 ON 4" TYPE 1 AGGREGATE BASE

BRIDGE APPROACH SLAB (BRIDGE END TO 20')	
CONCRETE PAVEMENT 12 IN. REINFORCED ON 4" TYPE 1 AGGREGATE BASE	ASPHALT PAVEMENT 2 IN. BIT. PVM'T BP-1 PG 64-22 ON 10 IN. BIT. BASE PG 64-22 ON 4" TYPE 1 AGGREGATE BASE

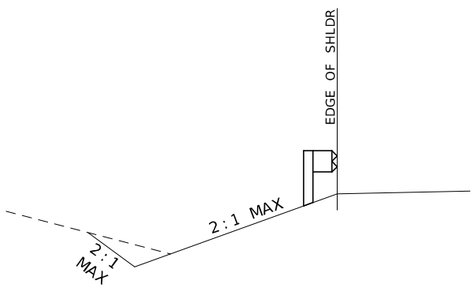

GRADING DETAIL FOR MGS GUARDRAIL
(SEE PLAN SHEETS FOR LOCATION)

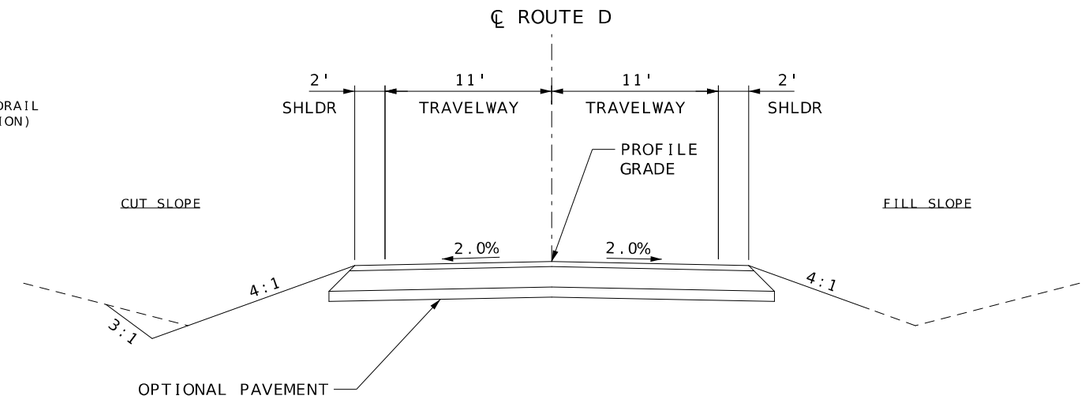

PROPOSED ROADWAY TYPICAL SECTION

STA. 109+14.04 TO STA. 111+93.37

POROUS BACKFILL DETAIL

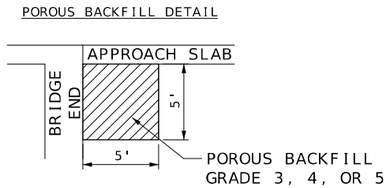

TYPICAL SECTIONS
SHEET 2 OF 2

STATE OF MISSOURI
MELISSA ANN WILBERS
NUMBER PE-2007002853
PROFESSIONAL ENGINEER

THIS SHEET HAS BEEN SIGNED, SEALED AND DATED ELECTRONICALLY.

DATE PREPARED 11/4/2026

ROUTE	STATE
D	MO
DISTRICT	SHEET NO.
SE	2

COUNTY: CAPE GIRARDEAU

JOB NO.: J9S3773

CONTRACT ID.:

PROJECT NO.:

BRIDGE NO.: A9778

REV.	DESCRIPTION	DATE

MISSOURI HIGHWAYS AND TRANSPORTATION COMMISSION
105 WEST CAPITOL
JEFFERSON CITY, MO 65102
1-888-ASK-MODOT (1-888-275-6636)

Bartlett&West
601 MONROE ST., SUITE 201 - JEFFERSON CITY, MO 65101
PHONE 573-634-3181
CERTIFICATE OF AUTHORITY NO. 000167 - ENGINEERING
WWW.BARTLETTWEST.COM

REMOVAL OF IMPROVEMENTS

ROUTE	STA.	STA.	LOCATION	DESCRIPTION	QUANTITY	UNIT	REMARKS
D	104+15.57	104+61.57	LT	15" PIPE REMOVAL	40	LF	
D	104+91.61	108+12.58	LT	PAVEMENT REMOVAL	64.5	SY	FOR PAVEMENT WIDENING
D	104+91.61	108+12.58	RT	PAVEMENT REMOVAL	87.5	SY	FOR PAVEMENT WIDENING
D	108+12.58	108+24.58	CL	PAVEMENT REMOVAL	25.7	SY	INCLUDES ASSOCIATED EMBANKMENT TO FILL REMOVAL
D	109+21.89	111+93.37	CL	PAVEMENT REMOVAL	741.4	SY	INCLUDES ASSOCIATED EMBANKMENT TO FILL REMOVAL
D	107+43.87	107+74.09	LT	48" PIPE REMOVAL	31	LF	
D	107+77.53	-	RT	SIGN REMOVAL	1	EA	OM3-R
D	107+89.95	-	LT	SIGN REMOVAL	1	EA	OM3-L
D	107+97.92	-	RT	SIGN REMOVAL	1	EA	OM3-R
D	108+09.66	-	LT	SIGN REMOVAL	1	EA	OM3-L
D	108+17.94	-	RT	SIGN REMOVAL	1	EA	OM3-R
D	108+26.63	-	LT	SIGN REMOVAL	1	EA	OM3-L
D	109+16.16	-	RT	SIGN REMOVAL	1	EA	OM3-L
D	109+30.61	-	LT	SIGN REMOVAL	1	EA	OM3-R
D	109+41.27	-	RT	SIGN REMOVAL	1	EA	OM3-L
D	109+47.91	-	LT	SIGN REMOVAL	1	EA	OM3-R
D	109+55.19	-	RT	SIGN REMOVAL	1	EA	OM3-L
D	109+67.82	-	LT	SIGN REMOVAL	1	EA	OM3-R
D	111+40.03	111+80.03	RT	15" PIPE REMOVAL	30	LF	
EXIST. D	98+91.61	-	RT	SIGN REMOVAL	1	EA	R2-2cP
EXIST. D	117+93.37	-	LT	SIGN REMOVAL	1	EA	R2-2cP
				TOTAL	1	LS	

MOBILIZATION

TOTAL = 1 LUMP SUM

ADDITIONAL MOBILIZATION FOR SEEDING

TOTAL = 2 EACH

CONTRACTOR FURNISHED SURVEYING AND STAKING

TOTAL = 1 LUMP SUM

CLEARING AND GRUBBING

ROUTE	STA.	STA.	LOCATION	CLEARING AND GRUBBING	REMARKS
				ACRE	
D	107+79.28	108+41.54	RT	0.03	
D	108+71.86	109+01.37	RT	0.02	
			TOTAL	0.05	
			USE	*NO DIRECT PAY	

*NO DIRECT PAY - CONSIDERED INCIDENTAL TO OTHER ITEMS IN THE CONTRACT

EARTHWORK

ROUTE	STA.	STA.	APPROX. EARTHWORK CUT	APPROX. EARTHWORK FILL	CLASS A EXCAVATION	COMPACTING EMBANKMENT	EMBANKMENT IN PLACE	SUBGRADE COMPACTION	REMARKS
			CY	CY	CY	CY	CY	100F	
D	104+91.61	111+93.37	302.8	1278.1	302.8	257.4	1020.7		
D	104+91.61	108+12.58						3.2	
D	109+55.68	111+93.37						2.4	
				TOTAL	302.8	257.4	1020.7	5.6	
				USE	303	257	1021	6	

NOTE: SHRINKAGE ESTIMATED AT 15%.

POROUS BACKFILL

ROUTE	STA.	STA.	LOCATION	POROUS BACKFILL	REMARKS
				CY	
D	108+27.00	108+32.00	CL	24.1	BRIDGE END, 5' W X 6' D
D	109+14.62	109+19.62	CL	24.1	BRIDGE END, 5' W X 6' D
			TOTAL	48.2	
			USE	48	

PAVEMENT

ROUTE	STA.	STA.	LOCATION	AGGREGATE BASE TYPE 1 4" THICKNESS	BITUMINOUS PAVEMENT MIXTURE PG 64-22 (BP-1)	BITUMINOUS PAVEMENT MIXTURE PG 64-22 (BASE)	OPTIONAL PAVEMENT	BITUMINOUS PAVEMENT MIXTURE PG 64-22 (SURFACE LEVELING)	TACK COAT	COLDMILLING BITUMINOUS PAVEMENT FOR REMOVAL OF SURFACING (3 IN. THICK OR LESS)	REMARKS
				SY	TONS	TONS	SY	TONS	GAL	SQ YD	
D	104+91.61	108+20.09	LT	147.5		63.7			7.4		WIDENING LEFT
D	104+91.61	108+05.07	RT	137.8		59.5			6.9		WIDENING RIGHT
D	104+91.61	108+12.58	CL		95.4			7.9	97.9	538.4	PROFILE MILLING AND LEVELING
D	109+55.68	111+93.37	CL	749.2			749.2				OPTIONAL PAVEMENT
			TOTAL	1034.5	95.4	123.2	749.2	7.9	112.2	538.4	
			USE	1035	95	123	749	8	112	538	

ENTRANCES

ROUTE	STA.	LOCATION	AREA	LINEAR GRADING CLASS 1	GRAVEL A OR CRUSHED STONE B 5-3/4" THICK	REMARKS
			(SF)	STA	TON	
D	104+33.57	LT	435.2	0.2	10.8	PRIVATE ENTRANCE
D	107+61.80	LT	1122.9	0.4	28.0	FIELD ENTRANCE
D	111+60.00	RT	783.4	0.3	19.5	FIELD ENTRANCE
			TOTAL	0.9	58.3	
			USE	1	58	

RUMBLE STRIP

ROUTE	STA.	STA.	LOCATION	BITUMINOUS SHOULDER RUMBLE STRIP	REMARKS
				STA	
D	106+50.00	108+18.93	LT	1.7	
D	106+50.00	108+06.23	RT	1.6	
D	109+27.69	111+93.37	RT	2.7	
D	109+40.39	111+93.37	LT	2.5	
			TOTAL	8.5	
			USE	9	

TEMPORARY EROSION CONTROL

ROUTE	STA.	STA.	LOCATION	ALTERNATE DITCH CHECK	SEDIMENT REMOVAL	SILT FENCE	TYPE C BERM	REMARKS
				LF	CY	LF	LF	
D	104+50.99	107+37.73	LT	40	4			4 DEVICES AT 75' SPACING
D	104+91.61	108+10.91	RT			309		
D	108+10.91	108+78.49	CL				125	
D	108.74.96	109+32.52	CL				118	
D	109+25.67	111+25.85	RT	130	13			13 DEVICES AT 15' SPACING
D	109+46.60	111+47.12	LT	200	20			20 DEVICES AT 10' SPACING
			TOTAL	370.0	37.0	309.0	243.0	
			USE	370	37	309	243	

NOTE: SEDIMENT REMOVAL IS BASED ON 1 CY PER DITCH CHECK.

ESTIMATE FACTORS

GRAVEL OR CRUSHED STONE:	0.039 TON / SQ YD / INCH
BIT. PVMT. MIX. (BP-1):	1.948 TON / CU YD
BIT. PVMT. MIX. (BASE):	1.943 TON / CU YD
TACK COAT ON COLD MILL:	0.10 GAL / SQ YD
TACK COAT ON NEW ASHP.:	0.05 GAL / SQ YD

SUMMARY OF QUANTITIES
SHEET 1 OF 3

STATE OF MISSOURI
MELISSA ANN WILBERS
NUMBER PE-2007002853
PROFESSIONAL ENGINEER

THIS SHEET HAS BEEN SIGNED, SEALED AND DATED ELECTRONICALLY.

DATE PREPARED: 11/12/2026
ROUTE: D
STATE: MO
DISTRICT: SE
SHEET NO.: 3
COUNTY: CAPE GIRARDEAU
JOB NO.: J9S3773
CONTRACT ID.:
PROJECT NO.:
BRIDGE NO.: A9778

DESCRIPTION

DATE

MISSOURI HIGHWAYS AND TRANSPORTATION COMMISSION

MoDOT

105 WEST CAPITOL
JEFFERSON CITY, MO 65102
1-888-ASK-MODOT (1-888-275-6636)

Bartlett & West

601 MONROE ST. SUITE 201 - JEFFERSON CITY, MO 65101
PHONE 573-634-3181
CERTIFICATE OF AUTHORITY NO. 000167 - ENGINEERING
WWW.BARTLETTWEST.COM

PERMANENT EROSION CONTROL

ROUTE	STA.	STA.	LOCATION	FURNISHING TYPE 2 ROCK DITCH LINER	PLACING TYPE 2 ROCK DITCH LINER	FURNISHING TYPE 2 ROCK BLANKET	PLACING TYPE 2 ROCK BLANKET	PERMANENT EROSION CONTROL GEOTEXTILE	TYPE 3B EROSION CONTROL BLANKET	REMARKS
				CY	CY	CY	CY	SY	SY	
D	104+91.61	107+29.86	LT						215.5	
D	106+23.77	108+05.07	RT						243.9	
D	108+05.07	108+68.36	CL			355.7	355.7	569.0		2' THICK WITH 160' KEY
D	108+82.59	109+41.55	CL			203.2	203.2	342.5		2' THICK WITH 170' KEY
D	109+37.25	111+18.62	LT						465.1	
D	109+25.67	110+03.61	RT						231.6	
D	111+25.85	111+38.12	RT	1.8	1.8			5.3		4' WIDE, 12' LONG, 1' DEEP
			TOTAL	1.8	1.8	558.9	558.9	916.8	1156.1	
			USE	2	2	559	559	917	1156	

DRAINAGE

ROUTE	STA	STA	LOCATION	GROUP C PIPE		GROUP C FLARED END SECTION		CLASS 3 EXCAVATION	REMARKS
				15"	48"	15"	48"		
				LF	LF	EACH	EACH	CY	
D	104+16.10	104+56.07	LT	26.0		2		6.3	PE 104+33.57
D	107+37.97	107+81.07	LT		33.0		2	89.2	FE 107+61.80
D	111+40.03	111+80.03	RT	38.0		2		17.9	FE 111+60.00
			TOTAL	64.0	33.0	4	2	113.4	
			USE	64	33	4	2	113	

GUARDRAIL

ROUTE	STA.	STA.	LOCATION	MGS GUARDRAIL	MGS GUARDRAIL 8 FT. POSTS 6 FT. - 3 IN. SPACING	MGS BRIDGE APPROACH TRANSITION SECTION (REGULAR/NO CURB)	TYPE A CRASHWORTHY END TERMINAL	TYPE C CRASHWORTHY END TERMINAL	GUARDRAIL DELINEATOR WHITE	REMARKS
				LF	LF	EA	EA	EA	EA	
D	106+23.40	108+15.03	RT	100.0		1	1		4	
D	108+08.51	108+30.51	LT					1	1	
D	109+16.11	110+03.61	RT			1	1		2	
D	109+31.13	111+18.63	LT		100.0	1	1		4	
			TOTAL	100.0	100.0	3.0	3.0	1.0	11.0	
			USE	100	100	3	3	1	11	

SEEDING AND MULCHING

ROUTE	STA	STA	LOCATION	MULCHING	SEEDING - COOL SEASON GRASSES	TEMPORARY SEEDING	REMARKS
				ACRES	ACRES	ACRES	
D	104+91.61	107+47.92	LT	0.19	0.15	0.04	FOR INFORMATION ONLY
D	104+91.61	108+05.07	RT	0.08	0.06	0.02	FOR INFORMATION ONLY
D	109+25.67	111+93.37	RT	0.14	0.11	0.03	FOR INFORMATION ONLY
D	109+41.55	111+93.37	LT	0.14	0.11	0.03	FOR INFORMATION ONLY
			TOTAL	0.55	0.43	0.12	FOR INFORMATION ONLY
			USE	1 LUMP SUM			

NOTE: MULCHING, SEEDING, AND TEMPORARY SEEDING SHALL BE PAID FOR AS 805-99.01 SEEDING AND MULCHING - COOL SEASON GRASSES, PER LUMP SUM.

PAVEMENT MARKING (PERMANENT)

ROUTE	STA.	STA.	LOCATION	CLASS 1 PAVEMENT MARKING PAINT (18-MIL, TYPE P BEADS)		REMARKS
				4 IN. WHITE	4 IN. YELLOW	
				LF	LF	
D	104+91.61	111+93.37	CL		1403.6	SOLID DOUBLE CENTERLINE
D	104+91.61	111+93.37	LT	701.8		SOLID EDGELINE
D	104+91.61	111+93.37	RT	701.8		SOLID EDGELINE
			TOTAL	1403.6	1403.6	
			USE	1404	1404	

SUMMARY OF QUANTITIES
SHEET 2 OF 3

STATE OF MISSOURI
MELISSA ANN WILBERS
NUMBER PE-2007002853
PROFESSIONAL ENGINEER

THIS SHEET HAS BEEN SIGNED, SEALED AND DATED ELECTRONICALLY.

DATE PREPARED
11/4/2026

ROUTE	STATE
D	MO

DISTRICT	SHEET NO.
SE	3

COUNTY
CAPE GIRARDEAU

JOB NO.
J9S3773

CONTRACT ID.

PROJECT NO.

BRIDGE NO.
A9778

DESCRIPTION	DATE

MISSOURI HIGHWAYS AND TRANSPORTATION COMMISSION
MoDOT
105 WEST CAPITOL
JEFFERSON CITY, MO 65102
1-888-ASK-MODOT (1-888-275-6636)

Bartlett & West
601 MONROE ST. SUITE 201 - JEFFERSON CITY, MO 65101
PHONE 573-634-3181
CERTIFICATE OF AUTHORITY NO. 000167 - ENGINEERING
WWW.BARTLETTWEST.COM

SIGN	SIZE IN.	AREA SQ.FT.	QTY EACH	TOTAL AREA SQ.FT.	QTY RELOC EACH	TOTAL RELOC SQ.FT.	SIGN NO.	DESCRIPTION
WARNING SIGNS								
WO1-1L	48X48	16.00						TURN (SYMBOL LEFT)
WO1-1R	48X48	16.00						TURN (SYMBOL RIGHT)
WO1-2L	48X48	16.00						CURVE (SYMBOL LEFT)
WO1-2R	48X48	16.00						CURVE (SYMBOL RIGHT)
WO1-3L	48X48	16.00						REVERSE TURN (SYMBOL LEFT)
WO1-3R	48X48	16.00						REVERSE TURN (SYMBOL RIGHT)
WO1-4L	48X48	16.00						REVERSE CURVE (SYMBOL LEFT)
WO1-4R	48X48	16.00						REVERSE CURVE (SYMBOL RIGHT)
WO1-4bL	48X48	16.00						DOUBLE ARROW REVERSE CURVE (SYMBOL LEFT)
WO1-4bR	48X48	16.00						DOUBLE ARROW REVERSE CURVE (SYMBOL RIGHT)
WO1-4cL	48X48	16.00						TRIPLE ARROW REVERSE CURVE (SYMBOL LEFT)
WO1-4cR	48X48	16.00						TRIPLE ARROW REVERSE CURVE (SYMBOL RIGHT)
WO1-6	60X30	12.50						HORIZONTAL ARROW (SYMBOL)
WO1-6a	72X36	18.00						HORIZ. ARROW (SYMBOL ON PERMANENT BARRICADE)
WO1-7	60X30	12.50						DOUBLE HEAD HORIZONTAL ARROW (SYMBOL)
WO1-7a	72X36	18.00						DOUBLE HEAD HORIZ. ARROW (SYMBOL ON PERM. BARR.)
WO1-8	18X24	3.00						CHEVRON (SYMBOL)
WO1-8a	30X36	7.50						CHEVRON (SYMBOL FOR DIVIDED HIGHWAYS)
WO3-1	48X48	16.00						STOP AHEAD (SYMBOL)
WO3-2	48X48	16.00						YIELD AHEAD (SYMBOL)
WO3-3	48X48	16.00						SIGNAL AHEAD (SYMBOL)
WO3-4	48X48	16.00						BE PREPARED TO STOP
WO3-5	48X48	16.00						SPEED LIMIT AHEAD
WO4-1L	48X48	16.00						MERGE (SYMBOL FROM LEFT)
WO4-1R	48X48	16.00						MERGE (SYMBOL FROM RIGHT)
WO4-1aL	48X48	16.00						MERGE (LEFT)
WO4-1aR	48X48	16.00						MERGE (RIGHT)
WO5-1	48X48	16.00						ROAD/BRIDGE/RAMP NARROWS
WO5-3	48X48	16.00						ONE LANE BRIDGE
WO5-5	48X48	16.00						NARROW LANES
WO6-1	48X48	16.00						DIVIDED HIGHWAY (SYMBOL)
WO6-2	48X48	16.00						DIVIDED HIGHWAY END (SYMBOL)
WO6-3	48X48	16.00						TWO WAY TRAFFIC (SYMBOL)
WO7-3a	30X24	5.00						NEXT XX MILES (PLAQUE)
WO8-1	48X48	16.00						BUMP
WO8-2	48X48	16.00						DIP
WO8-3	48X48	16.00						PAVEMENT ENDS
WO8-4	48X48	16.00						SOFT SHOULDER
WO8-5	48X48	16.00						SLIPPERY WHEN WET (SYMBOL)
WO8-6	48X48	16.00						TRUCK CROSSING
WO8-6c	48X48	16.00						TRUCK ENTRANCE
WO8-7	36X36	9.00						LOOSE GRAVEL
WO8-7a	36X36	9.00						FRESH OIL / LOOSE GRAVEL
WO8-9	48X48	16.00						LOW SHOULDER
WO8-11	48X48	16.00						UNEVEN LANES
WO8-12	48X48	16.00						NO CENTER LINE
WO8-15	48X48	16.00						GROOVED PAVEMENT
WO8-15P	30X24	5.00						MOTORCYCLE (PLAQUE)
WO8-17L	48X48	16.00						SHOULDER DROP-OFF (SYMBOL LEFT)
WO8-17R	48X48	16.00						SHOULDER DROP-OFF (SYMBOL RIGHT)
WO8-17P	30X24	5.00						SHOULDER DROP-OFF (PLAQUE)
W10-1	42RND.	9.62						RAILROAD CROSSING
WO12-1	24X24	4.00						DOUBLE DOWN ARROW (SYMBOL)
WO12-2	48X48	16.00						LOW CLEARANCE (SYMBOL)
WO12-2x	24X18	3.00						LOW CLEARANCE (PLAQUE)
WO12-2a	84X24	14.00						OVERHEAD LOW CLEARANCE (FEET AND INCHES)
WO12-4	120X60	50.00						LOW CLEARANCE XX FT XX IN XX MILES AHEAD
WO12-5	120X60	50.00						WIDTH RESTRICTION XX FT XX IN XX MILES AHEAD
WO13-1	30X30	6.25						ADVISORY SPEED (PLAQUE)
WO16-2	30X24	5.00						XXX FEET (PLAQUE)
WO16-3	30X24	5.00						X MILE (PLAQUE)
WO20-1	48X48	16.00						ROAD/BRIDGE/RAMP WORK AHEAD
WO20-2	48X48	16.00	2	32.00		18		DETOUR AHEAD
WO20-3	48X48	16.00	2	32.00		20A		ROAD CLOSED AHEAD
WO20-4	48X48	16.00						ONE LANE ROAD AHEAD
WO20-5	48X48	16.00						RIGHT/CENTER/LEFT LANE CLOSED AHEAD
WO20-5a	48X48	16.00						2 RIGHT/CENTER/LEFT LANES CLOSED AHEAD
WO20-6a	48X48	16.00						RIGHT/CENTER/LEFT LANE CLOSED
WO20-7a	48X48	16.00						FLAGGER (SYMBOL)
WO21-2	36X36	9.00						FRESH OIL
WO21-5	48X48	16.00						SHOULDER WORK / SHOULDER WORK AHEAD
WO22-1	48X48	16.00						BLASTING ZONE AHEAD
WO22-2	42X36	10.50						TURN OFF 2-WAY RADIO AND PHONE
WO22-3	42X36	10.50						END BLASTING ZONE
GO22-1	21X15	2.19						WET PAINT (ARROW PIVOTS)

SIGN	SIZE IN.	AREA SQ.FT.	QTY EACH	TOTAL SQ.FT.	QTY RELOC EACH	TOTAL RELOC SQ.FT.	SIGN NO.	DESCRIPTION
GUIDE SIGNS								
E05-1	36X48	12.00						GORE EXIT
E05-2	48X36	12.00						EXIT OPEN
E05-2a	48X36	12.00						EXIT CLOSED
GO20-1	60X24	10.00						ROAD WORK NEXT XX MILES
GO20-2	48X24	8.00						END ROAD WORK
GO20-4	36X18	4.50						PILOT CAR FOLLOW ME
GO20-4a	42X30	8.75						PILOT CAR IN USE WAIT & FOLLOW
GO20-4a	18X12	1.50						PILOT CAR IN USE WAIT & FOLLOW
GO20-5aP	36X24	6.00						WORK ZONE (PLAQUE)
MO4-8a	24X18	3.00	2	6.00			52	END DETOUR
MO4-9L	48X36	12.00						DETOUR (LEFT)
MO4-9R	48X36	12.00						DETOUR (RIGHT)
MO4-9P	48X12	4.00						STREET NAME (PLAQUE)
MO4-10L	48X18	6.00						DETOUR ARROW (LEFT)
MO4-10R	48X18	6.00						DETOUR ARROW (RIGHT)
REGULATORY SIGNS								
R1-1	48X48	13.25						STOP
R1-2	48TRI.	6.93						YIELD
R1-2a	36X36	9.00						TO ONCOMING TRAFFIC (PLAQUE)
R1-3P	30X12	2.50						ALL WAY (PLAQUE)
R2-1	36X48	12.00						SPEED LIMIT XX
R3-1	48X48	16.00						NO RIGHT TURN (SYMBOL)
R3-2	48X48	16.00						NO LEFT TURN (SYMBOL)
R3-3	36X36	9.00						NO TURNS
R3-4	48X48	16.00						NO U-TURN (SYMBOL)
R3-7L	30X30	6.25						LEFT LANE MUST TURN LEFT
R3-7R	30X30	6.25						RIGHT LANE MUST TURN RIGHT
R4-1	36X48	12.00						DO NOT PASS
R4-2	36X48	12.00						PASS WITH CARE
R4-7a	36X48	12.00						KEEP RIGHT (HORIZONTAL ARROW)
R4-8a	36X48	12.00						KEEP LEFT (HORIZONTAL ARROW)
R5-1	30X30	6.25						DO NOT ENTER
R5-1a	36X24	6.00						WRONG WAY
R6-1L	54X18	6.75						ONE WAY ARROW (LEFT)
R6-1R	54X18	6.75						ONE WAY ARROW (RIGHT)
R6-2L	24X30	5.00						ONE WAY (LEFT)
R6-2R	24X30	5.00						ONE WAY (RIGHT)
R9-9	24X12	2.00						SIDEWALK CLOSED
R9-11L	24X18	3.00						SIDEWALK CLOSED AHEAD, (ARROW LEFT) CROSS HERE
R9-11R	24X18	3.00						SIDEWALK CLOSED AHEAD, (ARROW RIGHT) CROSS HERE
R10-6	24X36	6.00						STOP HERE ON RED (45^ ARROW)
R11-2	48X30	10.00	2	20.00			29	ROAD CLOSED
R11-3a	60X30	12.50	2	25.00			1	ROAD CLOSED XX MILES AHEAD LOCAL TRAFFIC ONLY
R11-4	60X30	12.50	2	25.00			55C	ROAD CLOSED TO THRU TRAFFIC
CONST-3A	60X48	20.00						FINE SIGN
CONST-3X	56X12	4.67						SPEEDING/PASSING (PLATE)
MISCELLANEOUS SIGNS								
CONST-5	48X36	12.00						POINT OF PRESENCE
CONST-5	96X48	32.00						POINT OF PRESENCE
CONST-8	48X36	12.00						WORK ZONE NO PHONE ZONE
SPECIAL	36X60	15.00	8	120.00			70	DETOUR RTE D STRAIGHT ARROW
SPECIAL	36X60	15.00	5	75.00			71	DETOUR RTE D LT TURN ARROW
SPECIAL	36X60	15.00	6	90.00			72	DETOUR RTE D RT TURN ARROW
SPECIAL	36X60	15.00	2	30.00			73	DETOUR RTE D 45 DEG. RT ARROW
SPECIAL	36X60	15.00	3	45.00			74	DETOUR RTE D ADV. LT ARROW
SPECIAL	36X60	15.00	2	30.00			75	DETOUR RTE D ADV. RT ARROW
W1-5	36X36	9.00			1	9.00		WINDING ROAD
W13-1	30X30	6.25			1	6.25		
WO20-3a	48X48	16.00	2	32.00			20B	ROAD CLOSED 500 FT

616-10.05 CONSTRUCTION SIGNS	TOTAL
	562.0

616-10.10 RELOCATED SIGNS	TOTAL
	15.0

ITEM NUMBER	TOTAL QTY	DESCRIPTION
6122008		IMPACT ATTENUATOR 40 MPH (SAND BARRELS)
6122009		IMPACT ATTENUATOR 45 MPH (SAND BARRELS)
6122010		IMPACT ATTENUATOR 50 MPH (SAND BARRELS)
6122012		IMPACT ATTENUATOR 55 MPH (SAND BARRELS)
6122014		IMPACT ATTENUATOR 60 MPH (SAND BARRELS)
6122017		IMPACT ATTENUATOR 65 MPH (SAND BARRELS)
6122019		IMPACT ATTENUATOR 70 MPH (SAND BARRELS)
6122020		REPLACEMENT SAND BARREL
6122030		IMPACT ATTENUATOR (RELOCATION)
6122040		WORK ZONE CRASH CUSHION (NARROW)
6122041		WORK ZONE CRASH CUSHION (RELOCATION)
6123001		TRUCK MOUNTED ATTENUATOR (TMA)
6161012		BUOYS (BOATS KEEP OUT)
6161013		BUOYS (NO WAKE)
6161014		SPECIAL SIGN ASSEMBLY (BOATS KEEP OUT)
6161020		CHANNELIZER (DRUM-LIKE)
6161022		CHANNELIZER (CONE)
6161025		CHANNELIZER (TRIM-LINE)
6161026		CHANNELIZER (VERTICAL PANEL)
6161030	10	TYPE 3 MOVEABLE BARRICADE
6161033		DIRECTION INDICATOR BARRICADE
6161040		FLASHING ARROW PANEL
6161047		TYPE 3 OBJECT MARKER
6161055		SEQUENTIAL FLASHING WARNING LIGHT
6161070		TUBULAR MARKER
6161095		RADAR SPEED ADVISORY SYSTEM
6161096		CHANGEABLE MESSAGE SIGN, COMMISSION FURNISHED/RETAINED
6161098A	2	CHANGEABLE MESSAGE SIGN WITHOUT COMM. INTERFACE, CONTRACTOR FURNISHED/RETAINED
6161099		CHANGEABLE MESSAGE SIGN WITH COMM. INTERFACE, CONTRACTOR FURNISHED/RETAINED
6162000A		WORK ZONE TRAFFIC SIGNAL SYSTEM
6162002		TEMPORARY LONG-TERM RUMBLE STRIPS
6173600D		TEMPORARY TRAFFIC BARRIER, CONTRACTOR FURNISHED/RETAINED
6173700B		TEMP. TRAFFIC BARRIER ANCHORED, CONTRACTOR FURNISHED/RETAINED
6173706		TEMP. TRAFFIC BARRIER STIFFNESS TRANSITION CONTRACTOR FURNISHED/RETAINED
6174000A		TEMP. TRAFFIC BARRIER HEIGHT TRANSITION, CONTRACTOR FURNISHED/RETAINED
6175010A		RELOCATING TEMPORARY TRAFFIC BARRIER
6175011B		RELOCATING TEMP. TRAFFIC BARRIER ANCHORED
6175013		RELOCATING TEMP. TRAFFIC BARRIER STIFFNESS
6175020A		RELOCATING TEMP. TRAFFIC BARRIER HEIGHT
6208064A		TEMPORARY RAISED PAVEMENT MARKER
9029400		TEMPORARY TRAFFIC SIGNALS
9029401		TEMPORARY TRAFFIC SIGNALS AND LIGHTING

EFFECTIVE: 07-01-2025

SUMMARY OF QUANTITIES
SHEET 3 OF 3

STATE OF MISSOURI
MELISSA ANN WILBERS
NUMBER PE-2007002853
PROFESSIONAL ENGINEER
THIS SHEET HAS BEEN SIGNED, SEALED AND DATED ELECTRONICALLY.

DATE PREPARED
11/4/2026

ROUTE	STATE
D	MO

DISTRICT	SHEET NO.
SE	3

COUNTY
CAPE GIRARDEAU

JOB NO.
J9S3773

CONTRACT ID.

PROJECT NO.

BRIDGE NO.
A9778

DESCRIPTION

DATE

MISSOURI HIGHWAYS AND TRANSPORTATION COMMISSION
MoDOT
105 WEST CAPITOL
JEFFERSON CITY, MO 65102
1-888-ASK-MODOT (1-888-275-6636)

Bartlett & West
601 MONROE ST. SUITE 201 - JEFFERSON CITY, MO 65101
PHONE 573-634-3161
CERTIFICATE OF AUTHORITY NO. 000167 - ENGINEERING
WWW.BARTLETTWEST.COM

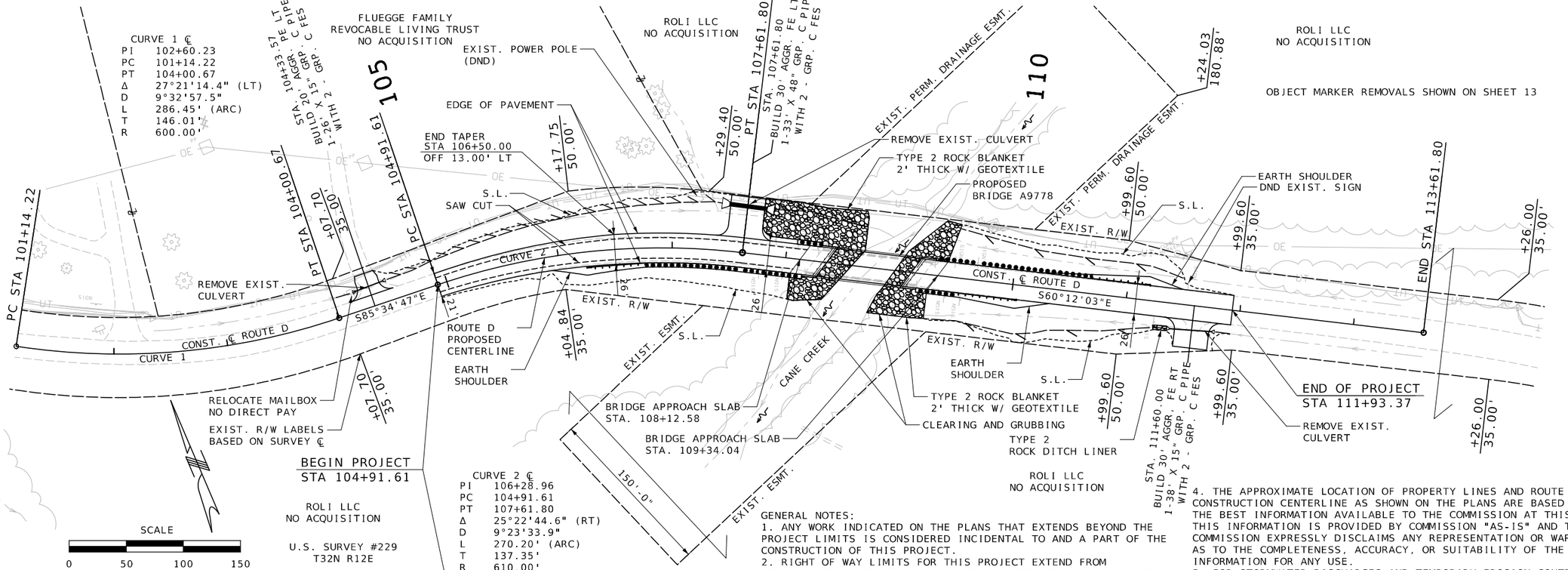

PLAN/PROFILE SHEET
ROUTE D
SHEET 1 OF 1

STATE OF MISSOURI
MELISSA ANN WILBERS
NUMBER PE-2007002853
PROFESSIONAL ENGINEER
THIS SHEET HAS BEEN SIGNED, SEALED AND DATED ELECTRONICALLY.

DATE PREPARED	
11/4/2026	
ROUTE	STATE
D	MO
DISTRICT	SHEET NO.
SE	4
COUNTY	
CAPE GIRARDEAU	
JOB NO.	
J9S3773	
CONTRACT ID.	
PROJECT NO.	
BRIDGE NO.	
A9778	

DESCRIPTION | DATE

MISSOURI HIGHWAYS AND TRANSPORTATION COMMISSION
105 WEST CAPITOL
JEFFERSON CITY, MO 65102
1-888-ASK-MODOT (1-888-275-6636)

Bartlett & West
601 MONROE ST. SUITE 201 - JEFFERSON CITY, MO 65101
PHONE 573-634-3181
CERTIFICATE OF AUTHORITY NO. 000167 - ENGINEERING
WWW.BARTLETTWEST.COM

ALL PROJECT COORDINATES HAVE BEEN PROJECTED FROM THE MISSOURI STATE PLANE COORDINATE (SPC) SYSTEM OF 1983 USING AN AVERAGE PROJECT PROJECTION (GRID TO GROUND) FACTOR. TO GET BACK TO STATE PLANE COORDINATES MULTIPLY THE PROJECT COORDINATES BY THE AVERAGE GRID FACTOR AS SHOWN IN THE "REFERENCE CONTROL INFORMATION" PORTION OF THIS TABLE.

PROJECT COORDINATE INFORMATION

COORDINATE SYSTEM	MO-EAST MODIFIED STATE PLANE (GROUND)
HORIZONTAL DATUM	NAD-83
VERTICAL DATUM	NAVD-88
GEOID MODEL	GEOID 18
ELEVATIONS DETERMINED BY	GPS OBSERVATIONS
PROJECT PROJECTION FACTOR	1.000057253

REFERENCE CONTROL INFORMATION

COORDINATE SYSTEM	SPC MO-EAST MODIFIED STATE PLANE
CONTROL STATION	MoDOT GPS CORS HEIGHT MODERNIZATION STATION
DESIGNATION	MOPT PATTON CORS GRP
CORS_ID	MOPT
PID	DR7393
LATITUDE	N37°31'27.91529"
LONGITUDE	W90°00'47.19019"
NORTHING (M)	187761.663
EASTING (M)	293036.848
ZONE	(2403) MO-EAST
PROJECT AVERAGE GRID FACTOR	0.99994275

EXAMPLE OF PROJECT COORDINATE TO S.P.C.

PROJECT NORTHING X AVERAGE GRID FACTOR
= STATE PLANE NORTHING
PROJECT EASTING X AVERAGE GRID FACTOR
= STATE PLANE EASTING

EXAMPLE: CONTROL POINT #400
(N) 575765.231 X (GF) 0.99994275 = N 575732.268
(E) 1052583.606 X (GF)0.99994275 = E 1052523.346

LINEAR UNIT CONVERSION

1 METER = 3.280833333 US SURVEY FEET (USFT)

COORDINATE POINT LISTING

SHEET NO	STATION	LOCATION	OFFSET (USFT)	MODIFIED STATE PLANE (GROUND) NORTHING (US SURVEY FT)	EASTING (US SURVEY FT)	ELEVATION (US SURVEY FT)	DESCRIPTION	GPK POINT ID
PROJECT CONTROL POINTS								
4	N/A	RIGHT	N/A	575,765.231	1,052,583.606	469.743	SET 5/8" REBAR W/ YELLOW "CONTROL POINT" CAP	400
4	110+12.98	LEFT	15.74	575,977.893	1,052,313.624	449.013	SET 1/2" REBAR W/ YELLOW "CONTROL POINT" CAP	401
4	107+29.82	RIGHT	15.04	576,090.799	1,052,052.905	444.143	SET 1/2" REBAR W/ YELLOW "CONTROL POINT" CAP	402
4	102+86.52	RIGHT	17.16	576,177.904	1,051,624.218	446.543	SET 5/8" REBAR W/ YELLOW "CONTROL POINT" CAP	403
4	109+77.24	LEFT	47.85	576,023.520	1,052,298.571	445.461	SET BENCHTIE W/YELLOW HANG TAG	950
4	109+29.17	LEFT	12.87	576,017.052	1,052,239.473	447.515	FOUND CHISELED SQUARE	951
ALIGNMENTS								
N/A	100+00.00	ROUTE D		576,323.197	1,051,374.243		BEGIN	
4	101+14.22	ROUTE D		576,263.051	1,051,471.345		PC	
4	104+00.67	ROUTE D		576,174.914	1,051,741.047		PT	
4	104+91.61	ROUTE D		576,167.906	1,051,831.711		PC	
4	107+61.80	ROUTE D		576,089.061	1,052,087.845		PT	
4	112+29.22	ROUTE D		575,856.771	1,052,493.458		END	

CONTROL POINTS 400 THRU 403 REFERENCE TIES DIFFER FROM PROJECT CONTROL NOTES. SHOWN ARE APPROXIMATION TIE'S FROM CONTROL NOTE DESCRIPTIONS.

CONTROL POINT 400
5/8" REBAR_W_YELLOW_CAP
ON THE SOUTHERN SIDE OF HWY D
NEAR THE NORTH EDGE OF CROP FIELD

NORTH = 575765.231
EAST= 1052583.606
ELEV.= 469.743

CONTROL POINT 401
1/2" REBAR_W_YELLOW_CAP
ALONG NORTHERN SIDE OF HWY D

NORTH = 575977.893
EAST= 1052313.624
ELEV.= 449.013

CONTROL POINT 402
1/2" REBAR_W_YELLOW_CAP
ALONG SOUTHERN SIDE OF HWY D

NORTH = 576090.799
EAST= 1052052.905
ELEV.= 444.143

CONTROL POINT 403
5/8" REBAR_W_YELLOW_CAP
ALONG SOUTHERN SIDE OF HWY D

NORTH = 576177.904
EAST= 1051624.218
ELEV.= 446.543

BENCHMARK 950
SET BENCHTIE WITH YELLOW HANG TAG IN THE SOUTHERN FACE OF THE FIRST WOOD UTILITY POLE ON THE NORTH SIDE OF HWY D, EAST OF CANE CREEK

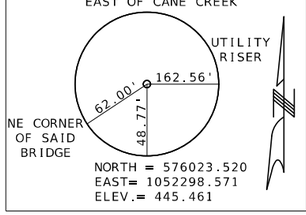

NORTH = 576023.520
EAST= 1052298.571
ELEV.= 445.461

BENCHMARK 951
FOUND CHISELED SQUARE ON THE NE WING WALL OF THE BRIDGE OVER CANE CREEK

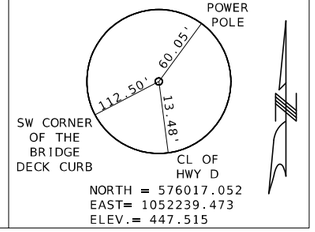

NORTH = 576017.052
EAST= 1052239.473
ELEV.= 447.515

REFERENCE POINT AND
COORDINATE POINT SHEET
SHEET 1 OF 1

STATE OF MISSOURI
MELISSA ANN WILBERS
NUMBER PE-2007002853
PROFESSIONAL ENGINEER
THIS SHEET HAS BEEN SIGNED, SEALED AND DATED ELECTRONICALLY.

DATE PREPARED 11/4/2026
ROUTE D | STATE MO
DISTRICT SE | SHEET NO. 5
COUNTY CAPE GIRARDEAU
JOB NO. J9S3773
CONTRACT ID.
PROJECT NO.
BRIDGE NO. A9778

DESCRIPTION | DATE

MISSOURI HIGHWAYS AND TRANSPORTATION COMMISSION
105 WEST CAPITOL
JEFFERSON CITY, MO 65102
1-888-ASK-MODOT (1-888-275-6636)

Bartlett & West
601 MONROE ST. SUITE 201 - JEFFERSON CITY, MO 65101
PHONE 573-634-3181
CERTIFICATE OF AUTHORITY NO. 000167 - ENGINEERING
WWW.BARTLETTWEST.COM

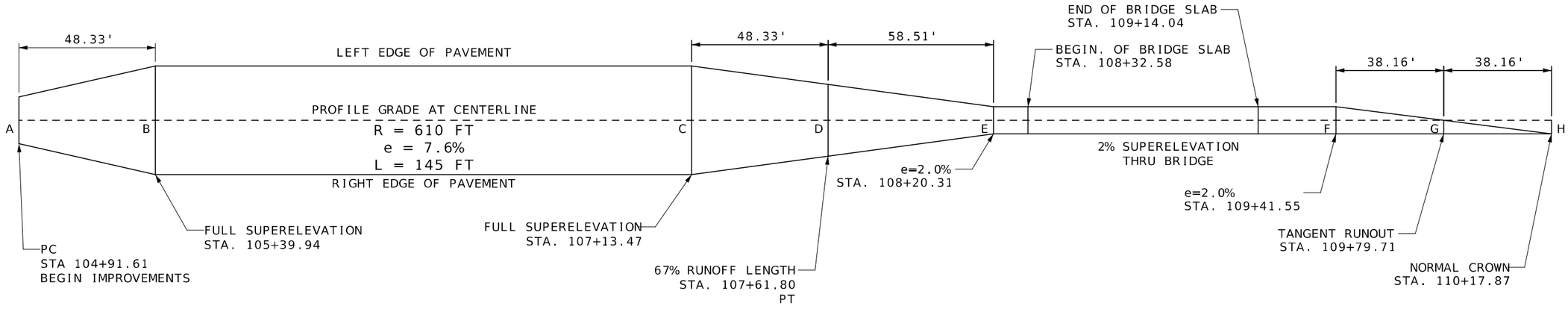

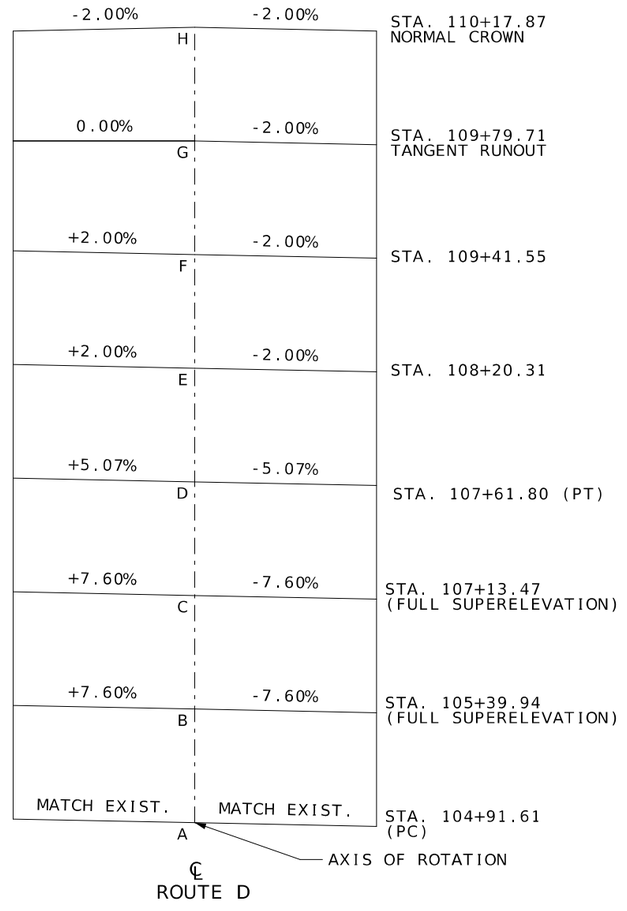

SPECIAL SHEETS
SUPERELEVATION DETAILS
SHEET 1 OF 4

STATE OF MISSOURI
MELISSA ANN WILBERS
NUMBER PE-2007002853
PROFESSIONAL ENGINEER

THIS SHEET HAS BEEN SIGNED, SEALED AND DATED ELECTRONICALLY.

DATE PREPARED	11/4/2026
ROUTE	D
STATE	MO
DISTRICT	SE
SHEET NO.	6
COUNTY	CAPE GIRARDEAU
JOB NO.	J9S3773
CONTRACT ID.	
PROJECT NO.	
BRIDGE NO.	A9778

DESCRIPTION | DATE

MISSOURI HIGHWAYS AND TRANSPORTATION COMMISSION
105 WEST CAPITOL
JEFFERSON CITY, MO 65102
1-888-ASK-MODOT (1-888-275-6636)

Bartlett & West
601 MONROE ST. SUITE 201 - JEFFERSON CITY, MO 65101
PHONE 573-634-3181
CERTIFICATE OF AUTHORITY NO. 000167 - ENGINEERING
WWW.BARTLETTWEST.COM

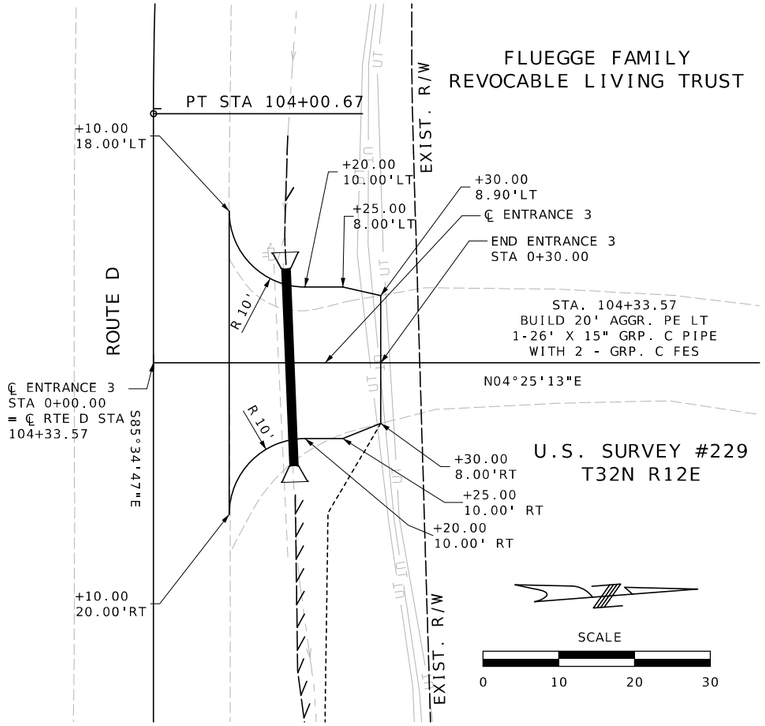

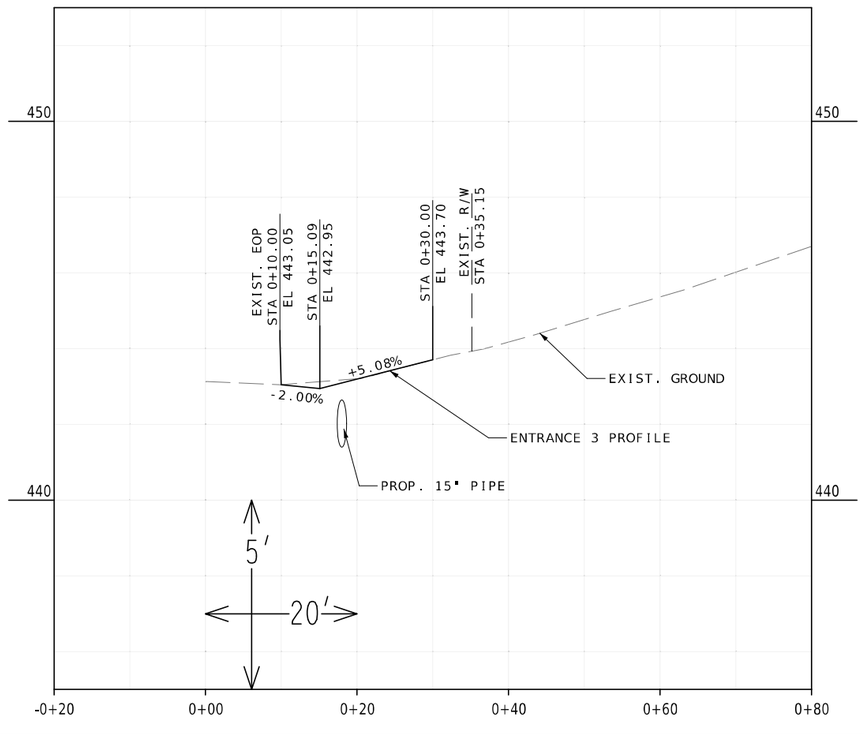

SPECIAL SHEETS
DRIVEWAY DETAILS
SHEET 3 OF 4

STATE OF MISSOURI
MELISSA ANN WILBERS
NUMBER PE-2007002853
PROFESSIONAL ENGINEER

THIS SHEET HAS BEEN SIGNED, SEALED AND DATED ELECTRONICALLY.

DATE PREPARED
11/4/2026

ROUTE	STATE
D	MO
DISTRICT	SHEET NO.
SE	8

COUNTY
CAPE GIRARDEAU

JOB NO.
J9S3773

CONTRACT ID.

PROJECT NO.

BRIDGE NO.
A9778

DESCRIPTION	DATE

MISSOURI HIGHWAYS AND TRANSPORTATION COMMISSION
105 WEST CAPITOL
JEFFERSON CITY, MO 65102
1-888-ASK-MODOT (1-888-275-6636)

Bartlett & West
601 MONROE ST. SUITE 201 - JEFFERSON CITY, MO 65101
PHONE 573-634-3181
CERTIFICATE OF AUTHORITY NO. 000167 - ENGINEERING
WWW.BARTLETTWEST.COM

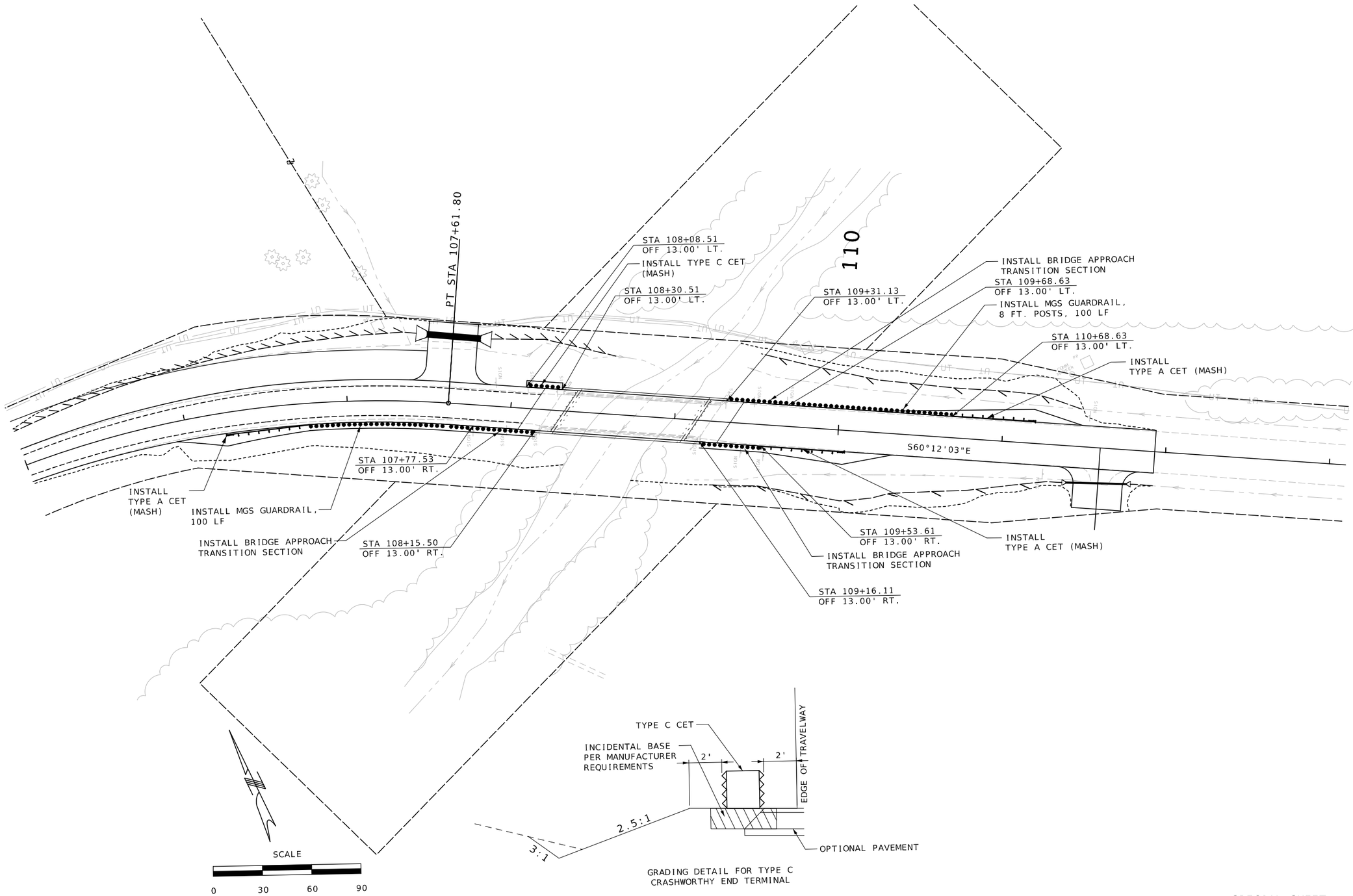

SPECIAL SHEET
GUARDRAIL DETAIL
SHEET 4 OF 4

STATE OF MISSOURI
MELISSA ANN WILBERS
NUMBER PE-2007002853
PROFESSIONAL ENGINEER

THIS SHEET HAS BEEN SIGNED, SEALED AND DATED ELECTRONICALLY.

DATE PREPARED
11/4/2026

ROUTE	STATE
D	MO
DISTRICT	SHEET NO.
SE	9

COUNTY
CAPE GIRARDEAU

JOB NO.
J9S3773

CONTRACT ID.

PROJECT NO.

BRIDGE NO.
A9778

DESCRIPTION	DATE

MISSOURI HIGHWAYS AND TRANSPORTATION COMMISSION
105 WEST CAPITOL
JEFFERSON CITY, MO 65102
1-888-ASK-MODOT (1-888-275-6636)

Bartlett & West
601 MONROE ST. SUITE 201 - JEFFERSON CITY, MO 65101
PHONE 573-634-3181
CERTIFICATE OF AUTHORITY NO. 000167 - ENGINEERING
WWW.BARTLETTWEST.COM

NOTES:
1. SIGN SPACINGS MAY BE ADJUSTED AS NECESSARY TO MEET FIELD CONDITIONS.
2. ANY EXISTING SIGNS THAT CONFLICT WITH TRAFFIC CONTROL SHALL BE COVERED OR REMOVED.
3. NO DIRECT PAYMENT WILL BE MADE FOR RELOCATING. COVERING, UNCOVERING, OR REMOVING OF TCP SIGNS.
4. REMOVE AND/OR MODIFY EXISTING PAVEMENT MARKING AS NEEDED.

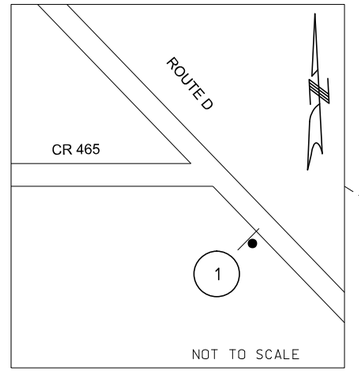

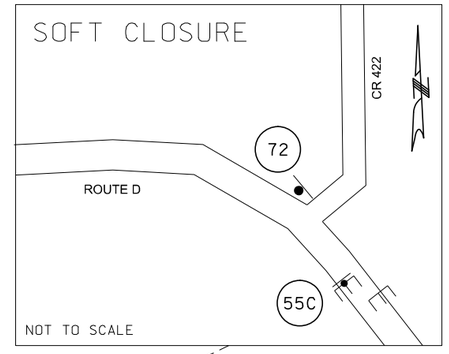

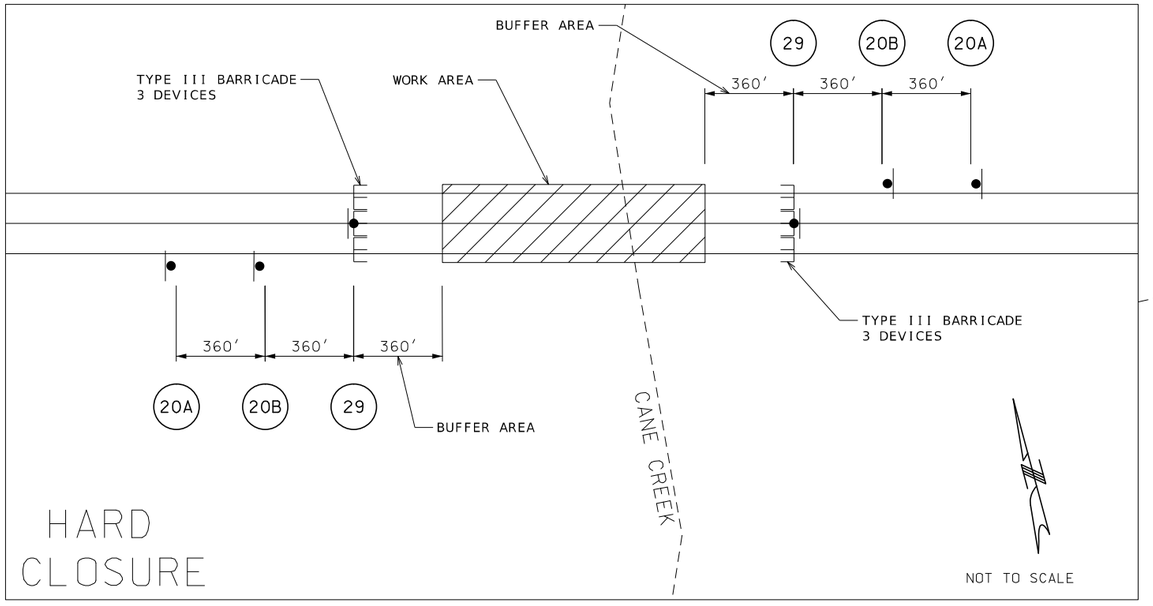

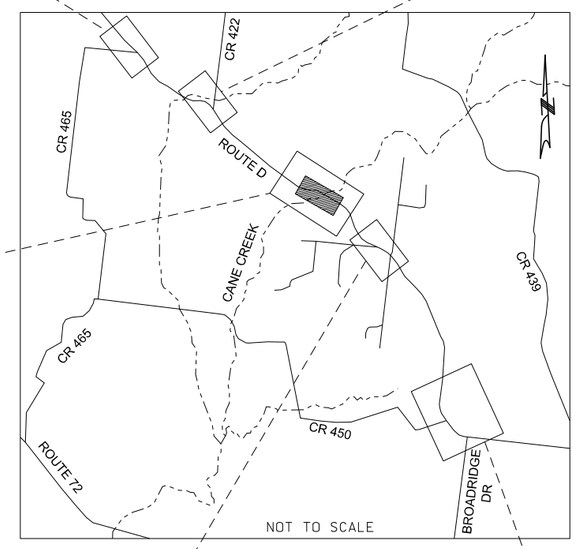

TRAFFIC CONTROL LEGEND

- SIGN (SINGLE SIDED)
- TYPE III MOVEABLE BARRICADE
- WORK AREA

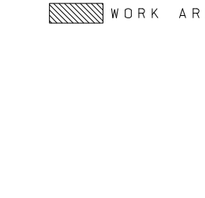









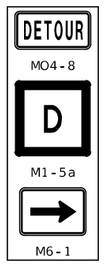

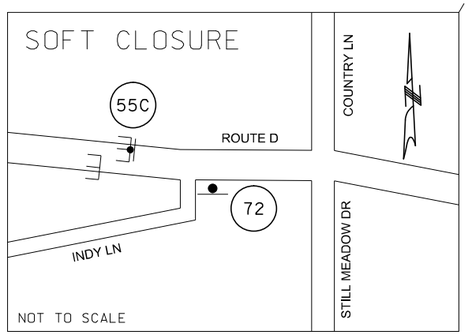

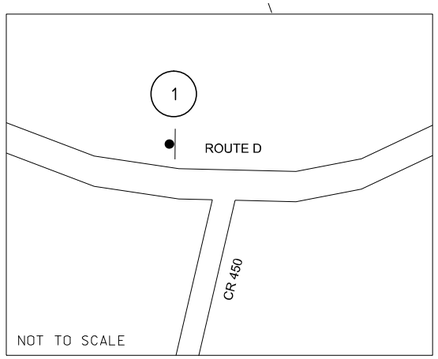

TRAFFIC CONTROL
SHEET 1 OF 2

STATE OF MISSOURI
MELISSA ANN WILBERS
NUMBER PE-2007002853
PROFESSIONAL ENGINEER
THIS SHEET HAS BEEN SIGNED, SEALED AND DATED ELECTRONICALLY.

DATE PREPARED: 11/4/2026
ROUTE: D | STATE: MO
DISTRICT: SE | SHEET NO.: 10
COUNTY: CAPE GIRARDEAU
JOB NO.: J9S3773
CONTRACT ID.:
PROJECT NO.:
BRIDGE NO.: A9778

DESCRIPTION	DATE

MISSOURI HIGHWAYS AND TRANSPORTATION COMMISSION
105 WEST CAPITOL
JEFFERSON CITY, MO 65102
1-888-ASK-MODOT (1-888-275-6636)

Bartlett & West
601 MONROE ST. SUITE 201 - JEFFERSON CITY, MO 65101
PHONE 573-634-3181
CERTIFICATE OF AUTHORITY NO. 000167 - ENGINEERING
WWW.BARTLETTWEST.COM

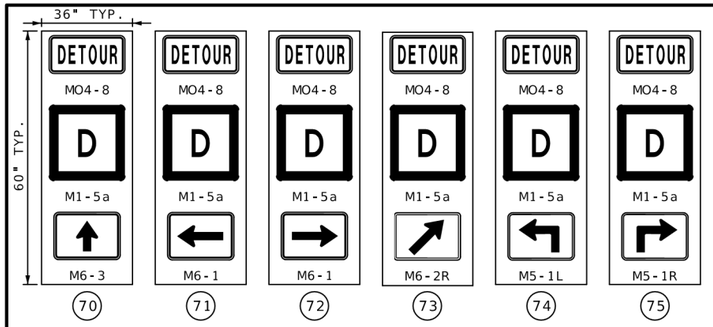

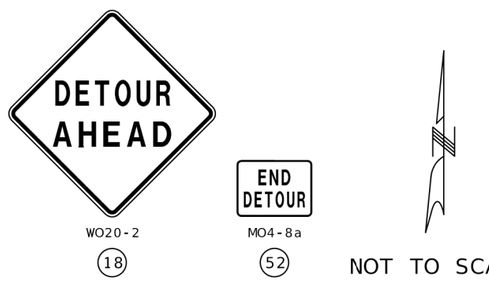

NOT TO SCALE

TRAFFIC CONTROL LEGEND

- SIGN (SINGLE SIDED)
- WORK AREA
- CHANGEABLE MESSAGE BOARD

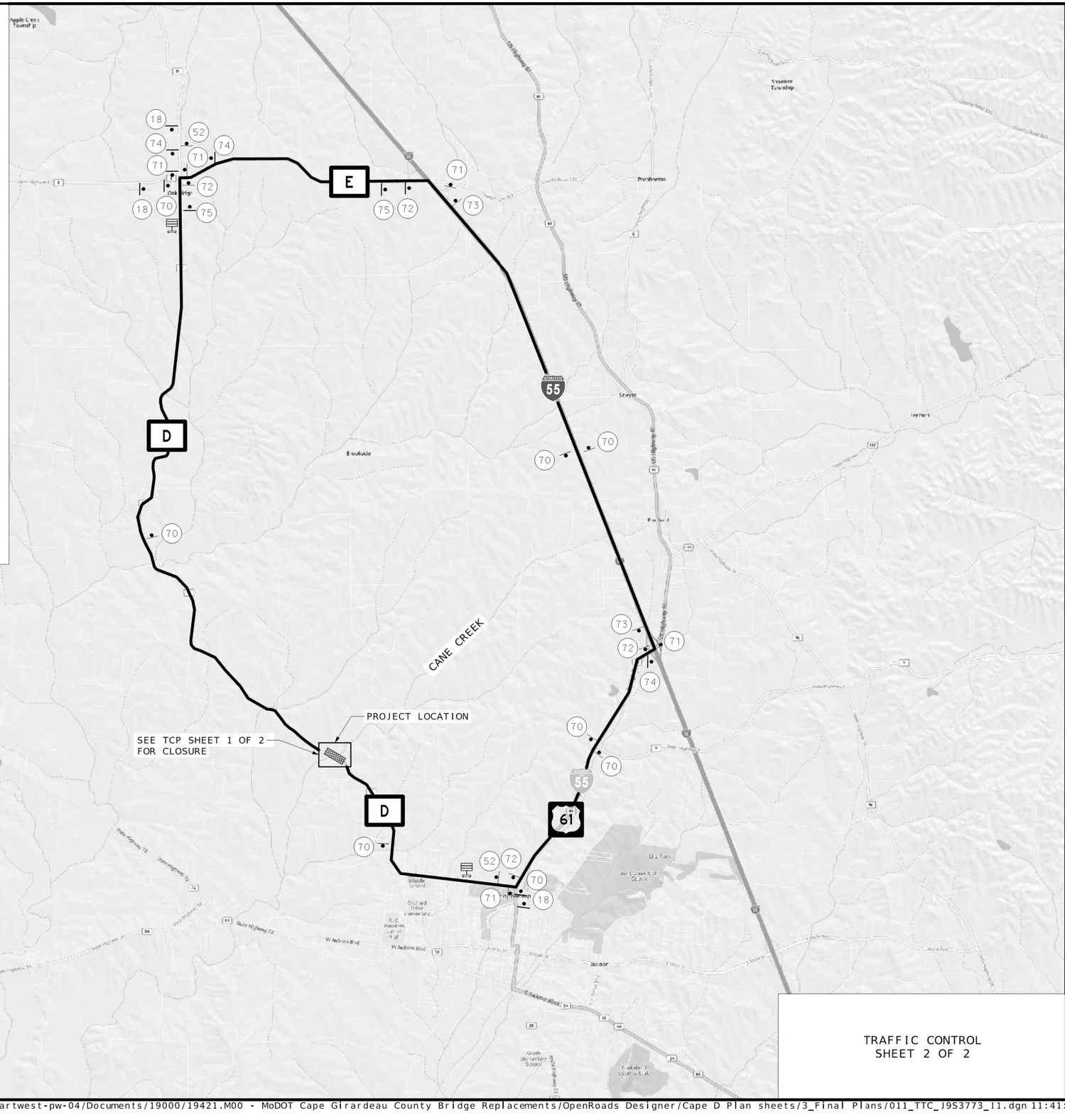

TRAFFIC CONTROL
SHEET 2 OF 2

STATE OF MISSOURI
MELISSA ANN WILBERS
NUMBER PE-2007002853
PROFESSIONAL ENGINEER

THIS SHEET HAS BEEN SIGNED, SEALED AND DATED ELECTRONICALLY.

DATE PREPARED
11/4/2026

ROUTE	STATE
D	MO
DISTRICT	SHEET NO.
SE	11

COUNTY
CAPE GIRARDEAU

JOB NO.
J9S3773

CONTRACT ID.

PROJECT NO.

BRIDGE NO.
A9778

DESCRIPTION	DATE

MISSOURI HIGHWAYS AND TRANSPORTATION COMMISSION

105 WEST CAPITOL
JEFFERSON CITY, MO 65102
1-888-ASK-MODOT (1-888-275-6636)

Bartlett&West
601 MONROE ST. SUITE 201 - JEFFERSON CITY, MO 65101
PHONE 573-634-3181
CERTIFICATE OF AUTHORITY NO. 000167 - ENGINEERING
WWW.BARTLETTWEST.COM

TEMPORARY EROSION CONTROL LEGEND

TEMPORARY BERM TYPE C

SILT FENCE

EROSION CONTROL BLANKET

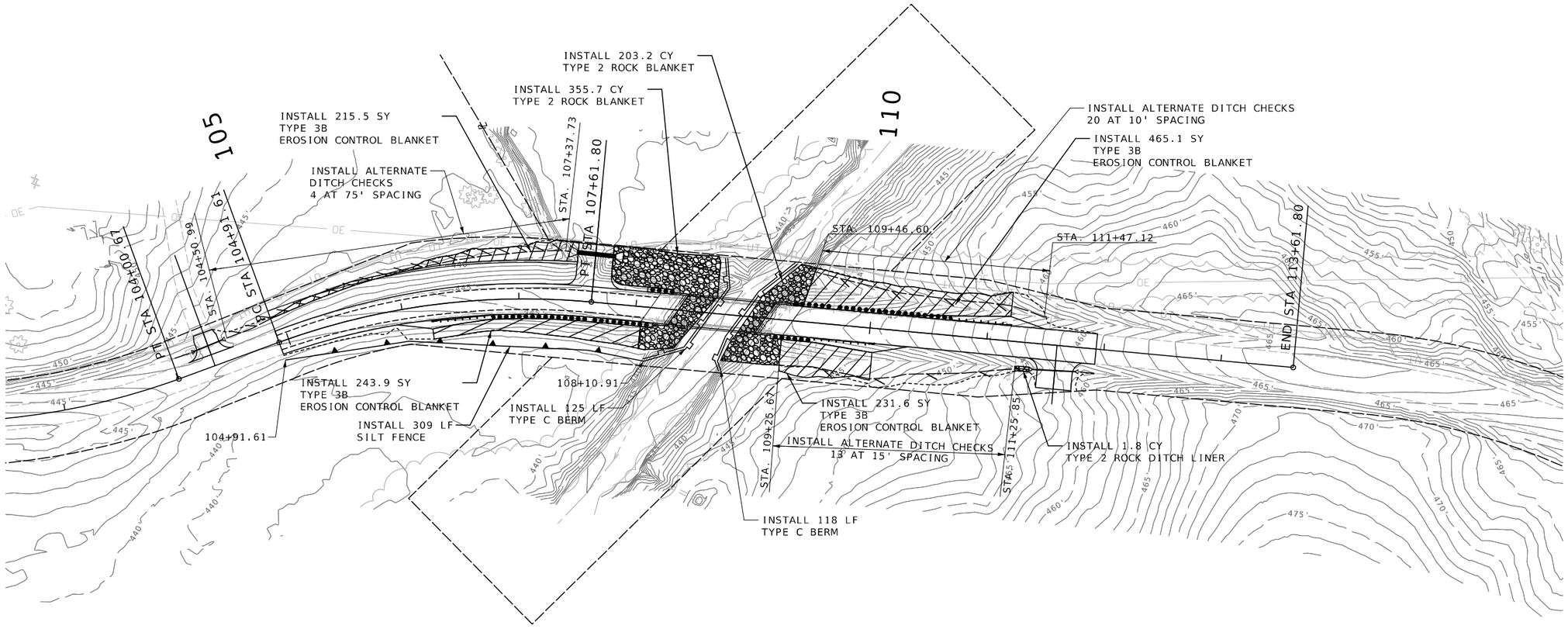

SCALE

0 50 100 150

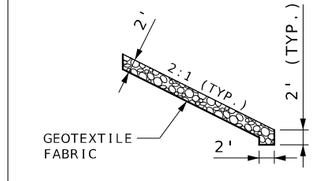

ROCK BLANKET DETAIL

ROCK BLANKET KEY AT TOE OF SLOPE
CAN BE OMITTED OR REDUCED
WITH THE APPROVAL OF THE ENGINEER
IF ROCK IS ENCOUNTERED.

RECEIVING WATERS FOR RUNOFF FROM THE PROJECT IS CANE CREEK

EROSION CONTROL
SHEET 1 OF 1

STATE OF MISSOURI
MELISSA ANN WILBERS
NUMBER PE-2007002853
PROFESSIONAL ENGINEER

THIS SHEET HAS BEEN SIGNED, SEALED AND DATED ELECTRONICALLY.

DATE PREPARED
11/4/2026

ROUTE	STATE
D	MO
DISTRICT	SHEET NO.
SE	12

COUNTY
CAPE GIRARDEAU

JOB NO.
J9S3773

CONTRACT ID.

PROJECT NO.

BRIDGE NO.
A9778

DESCRIPTION	DATE

MISSOURI HIGHWAYS AND TRANSPORTATION COMMISSION

105 WEST CAPITOL
JEFFERSON CITY, MO 65102
1-888-ASK-MODOT (1-888-275-6636)

Bartlett & West

601 MONROE ST. SUITE 201 - JEFFERSON CITY, MO 65101
PHONE 573-634-3181
CERTIFICATE OF AUTHORITY NO. 000167 - ENGINEERING
WWW.BARTLETTWEST.COM

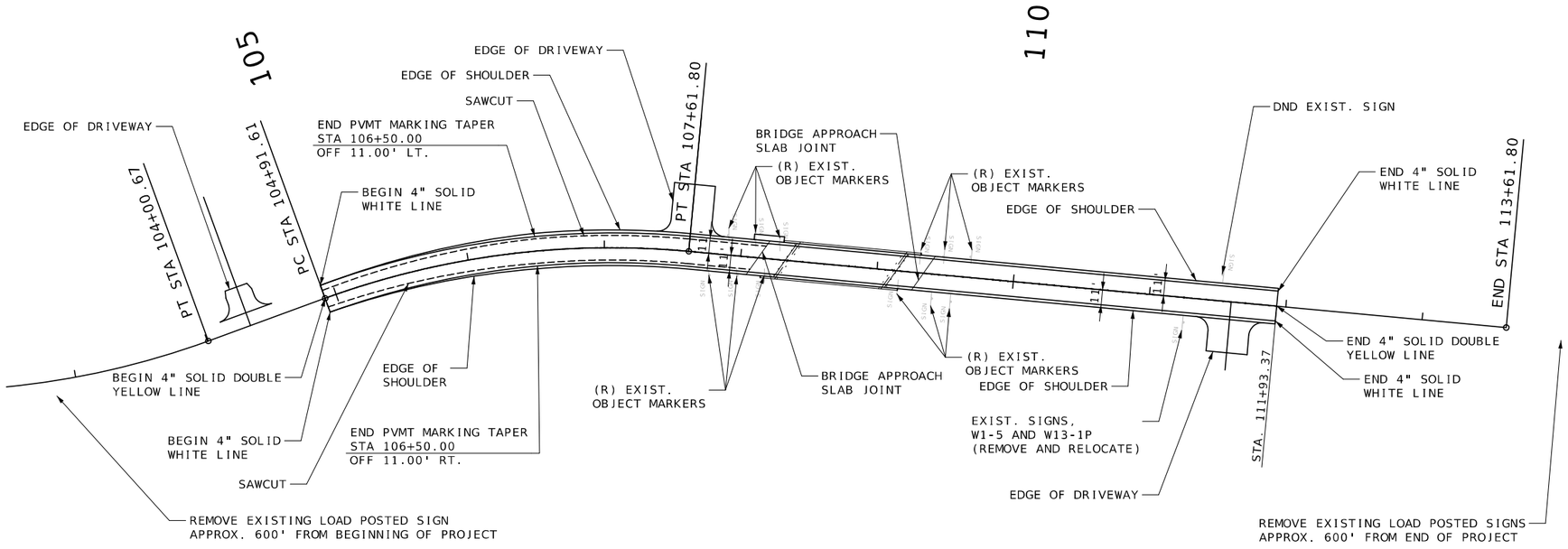

PAVEMENT MARKINGS AND SIGNING
SHEET 1 OF 1

STATE OF MISSOURI
MELISSA ANN WILBERS
NUMBER PE-2007002853
PROFESSIONAL ENGINEER

THIS SHEET HAS BEEN SIGNED, SEALED AND DATED ELECTRONICALLY.

DATE PREPARED
11/4/2026

ROUTE	STATE
D	MO
DISTRICT	SHEET NO.
SE	13

COUNTY
CAPE GIRARDEAU

JOB NO.
J9S3773

CONTRACT ID.

PROJECT NO.

BRIDGE NO.
A9778

DESCRIPTION	DATE

MISSOURI HIGHWAYS AND TRANSPORTATION COMMISSION
105 WEST CAPITOL
JEFFERSON CITY, MO 65102
1-888-ASK-MODOT (1-888-275-6636)

Bartlett & West
601 MONROE ST. SUITE 201 - JEFFERSON CITY, MO 65101
PHONE 573-634-3181
CERTIFICATE OF AUTHORITY NO. 000167 - ENGINEERING
WWW.BARTLETTWEST.COM

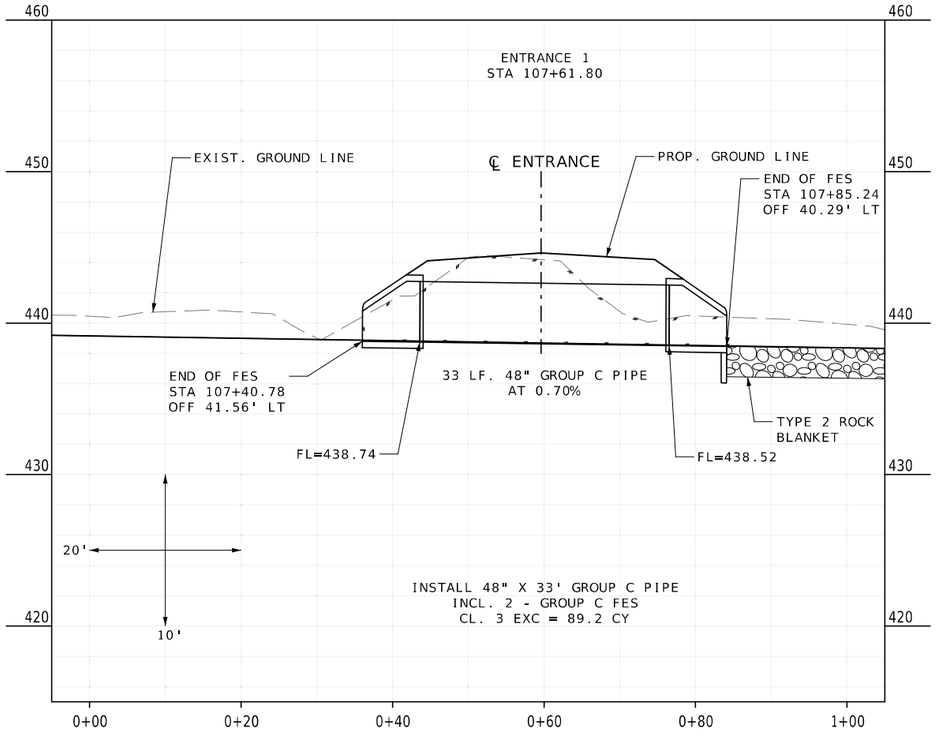

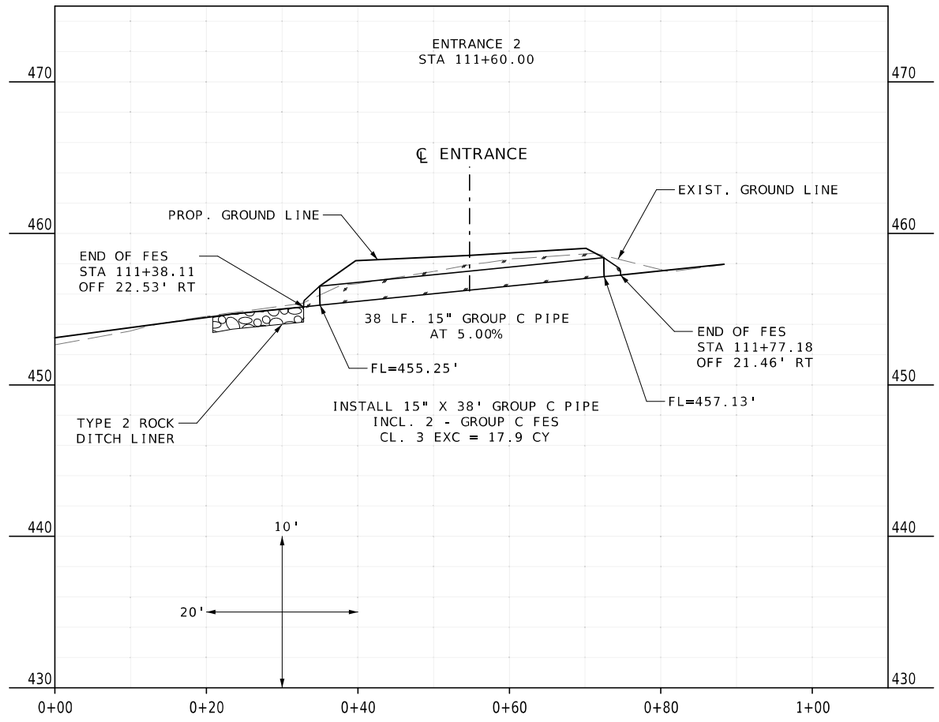

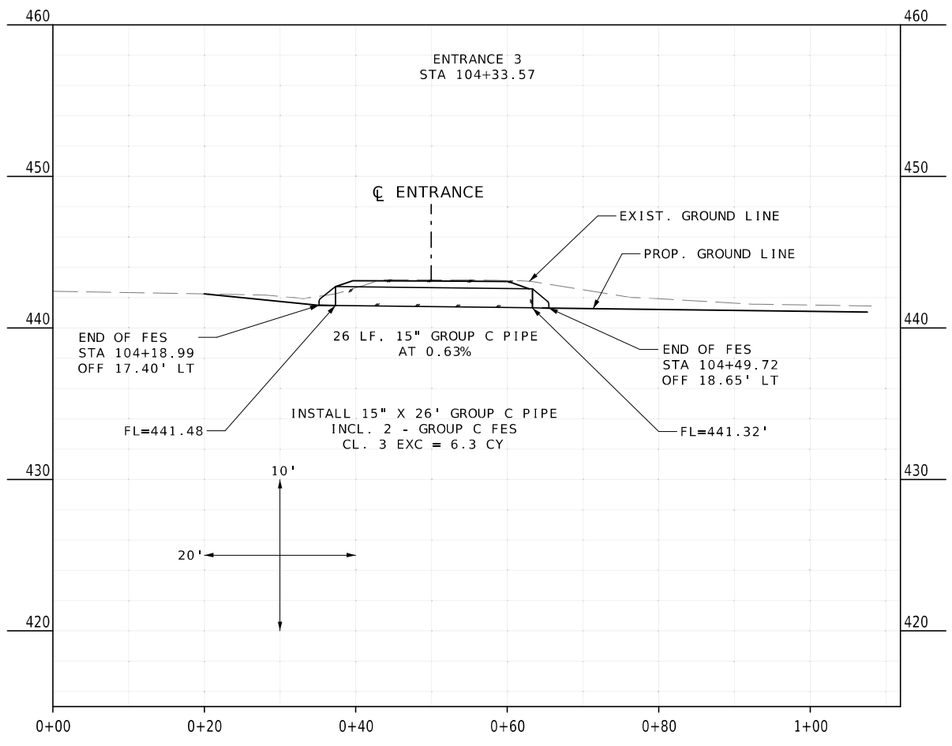

CULVERT SECTIONS
SHEET 1 OF 1

STATE OF MISSOURI
MELISSA ANN WILBERS
NUMBER PE-2007002853
PROFESSIONAL ENGINEER

THIS SHEET HAS BEEN SIGNED, SEALED AND DATED ELECTRONICALLY.

DATE PREPARED: 11/4/2026
ROUTE: D | STATE: MO
DISTRICT: SE | SHEET NO.: 14
COUNTY: CAPE GIRARDEAU
JOB NO.: J9S3773
CONTRACT ID.:
PROJECT NO.:
BRIDGE NO.: A9778

DESCRIPTION	DATE

MISSOURI HIGHWAYS AND TRANSPORTATION COMMISSION
105 WEST CAPITOL
JEFFERSON CITY, MO 65102
1-888-ASK-MODOT (1-888-275-6636)

Bartlett & West
601 MONROE ST. SUITE 201 - JEFFERSON CITY, MO 65101
PHONE 573-634-3181
CERTIFICATE OF AUTHORITY NO. 000167 - ENGINEERING
WWW.BARTLETTWEST.COM

SUPERELEVATION DATA
Sta. 107+13.47 7.60% Full Superelevation
Sta. 107+61.80 5.07% Superelevation
Sta. 108+20.31 2.00% Superelevation

(78') PRESTRESSED CONCRETE NU-GIRDER GIRDER SPAN
SKEW: 30°00'00" L.A.

SEC/SUR 229 TWP 32N RGE 12E

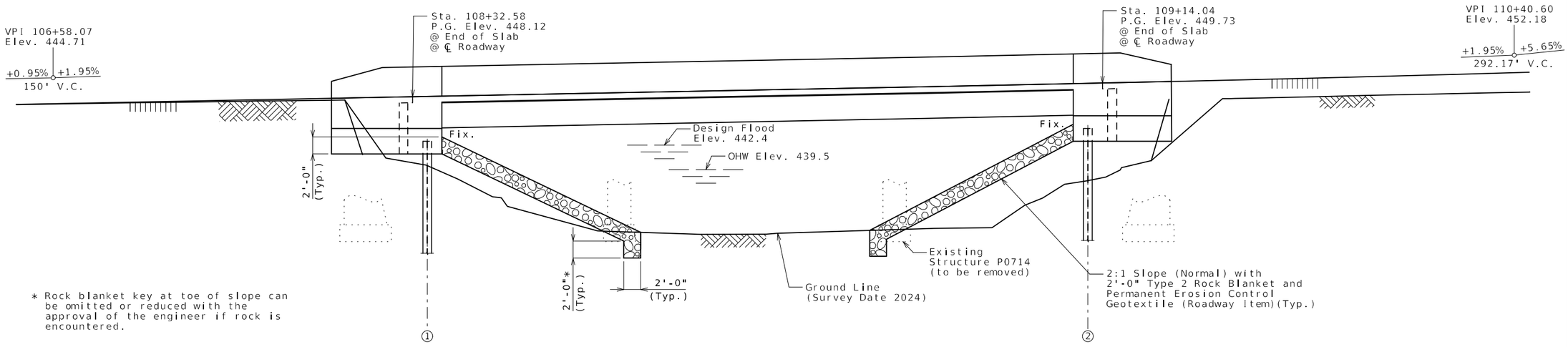

* Rock blanket key at toe of slope can be omitted or reduced with the approval of the engineer if rock is encountered.

GENERAL ELEVATION

Notes: For General Notes, Estimated Quantities, Foundation Data, Estimated Quantities for Slab on Concrete NU-Girder, Hydrologic Data and Location Sketch, see Sheet No. 2.

Roadway fill shall be completed to the final roadway section and up to the elevation of the bottom of the concrete beam within the limits of the structure and for not less than 25 feet in back of the fill face of the end bents before any piles are driven for any bents falling within the embankment section.

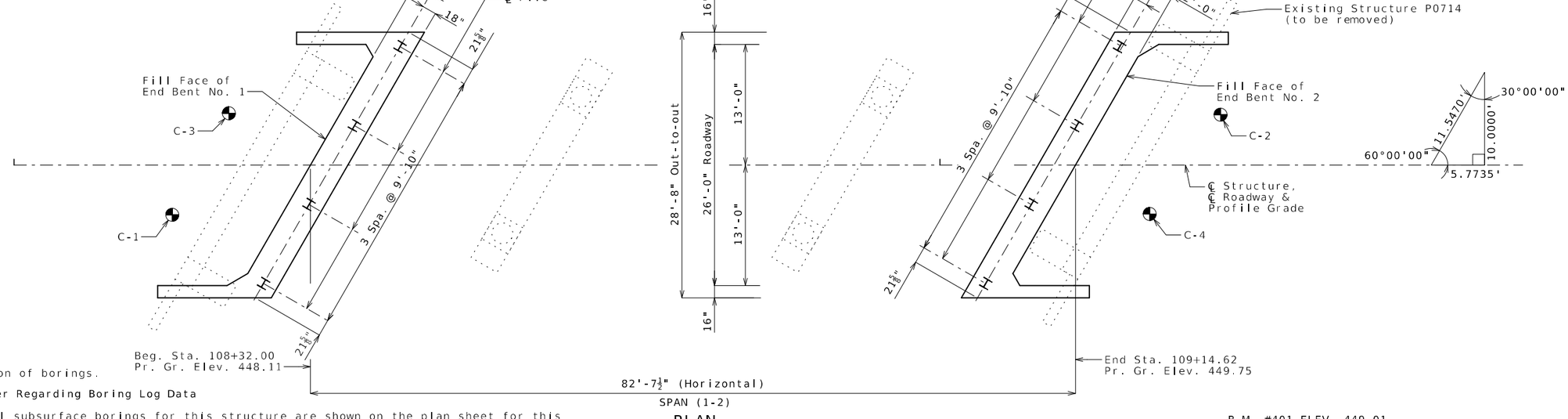

SPAN (1-2)

PLAN

Indicates location of borings.

Notice and Disclaimer Regarding Boring Log Data

The locations of all subsurface borings for this structure are shown on the plan sheet for this structure. The boring data for all locations indicated, as well as any other boring logs or other factual records of subsurface data and investigations performed by the department for the design of the project, are shown on Sheet No. 22 and may be included in the Electronic Bridge Deliverables. They will also be available from the Project Contact upon written request. No greater significance or weight should be given to the boring data depicted on the plan sheets than is given to the subsurface data available from the district or elsewhere.

The Commission does not represent or warrant that any such boring data accurately depicts the conditions to be encountered in constructing this project. A contractor assumes all risks it may encounter in basing its bid prices, time or schedule of performance on the boring data depicted here or those available from the district, or on any other documentation not expressly warranted, which the contractor may obtain from the Commission.

B.M. #401 ELEV. 449.01
STA. 110+12.98, 15.74' LT. RTE. D
SET 1/2" REBAR WITH
YELLOW "CONTROL POINT" CAP

B.M. #402 ELEV. 444.14
STA. 107+29.81, 15.04' RT. RTE. D
SET 1/2" REBAR WITH
YELLOW "CONTROL POINT" CAP

BRIDGE: ROUTE D OVER CANE CREEK

ROUTE D FROM ROUTE E TO ROUTE 61
ABOUT 2.75 MILES NORTHWEST OF ROUTE 61
BEGINNING STATION 108+32.00

Detailed Jan. 2026
Checked July 2026

Note: This drawing is not to scale. Follow dimensions.

STATE OF MISSOURI
CHRISTOPHER J. CRISWELL
NUMBER PE-026605
PROFESSIONAL ENGINEER
THIS SHEET HAS BEEN SIGNED, SEALED AND DATED ELECTRONICALLY.

DATE PREPARED 9/2/2026
ROUTE D | STATE MO
DISTRICT BR | SHEET NO. 1
COUNTY CAPE GIRARDEAU
JOB NO. J9S3773
CONTRACT ID.
PROJECT NO.
BRIDGE NO. A9778

DESCRIPTION | DATE

IF A SEAL IS PRESENT ON THIS SHEET IT HAS BEEN ELECTRONICALLY SEALED AND DATED.

MISSOURI HIGHWAYS AND TRANSPORTATION COMMISSION
105 WEST CAPITOL
JEFFERSON CITY, MO 65102
1-888-ASK-MODOT (1-888-275-6636)

Bartlett & West
601 MONROE STREET, SUITE 201 - JEFFERSON CITY, MO 65101
PHONE 573-634-3181 - FAX 573-634-7904
CERTIFICATE OF AUTHORITY NO. 000167 - ENGINEERING
WWW.BARTWEST.COM

Estimated Quantities

Item		Substr.	Superstr.	Total
Removal of Bridges (P0714)	lump sum			1
Bridge Approach Slab (Minor)	sq. yard			118
Galvanized Structural Steel Piles (12 in.)	linear foot	156		156
Pile Wave Analysis	each	2		2
Pre-Bore for Piling	linear foot	120		120
Pile Point Reinforcement	each	8		8
Class B Concrete (Substructure)	cu. yard	34.6		34.6
Type D Barrier	linear foot		201	201
Slab on Concrete NU-Girder	sq. yard		259	259
NU 35, Prestressed Concrete NU-Girder	linear foot		236	236
Vertical Drain at End Bents	each			2
Laminated Neoprene Bearing Pad	each		3	3
Laminated Neoprene Bearing Pad (Tapered)	each		3	3

All concrete above the construction joint in the end bents is included in the Estimated Quantities for Slab on Concrete NU-Girder.

All reinforcement in the end bents is included in the Estimated Quantities for Slab on Concrete NU-Girder.

Cost of L4x4 ASTM A709 Grade 36 HP pile anchors and 3/4-inch diameter ASTM F3125 Grade A325 Type 1 bolts, complete in place, will be considered completely covered by the contract unit price for Galvanized Structural Steel Piles (12 in.).

Cost of any required excavation for bridge will be considered completely covered by the unit price for other items.

Estimated Quantities for Slab on Concrete NU-Girder

Item		Total
Class B-2 Concrete	cu. yard	89
Reinforcing Steel (Epoxy Coated)	pound	21,020

The table of Estimated Quantities for Slab on Concrete NU-Girder represents the quantities used by the State in preparing the cost estimate for concrete slabs. The area of the concrete slab will be measured to the nearest square yard longitudinally from end of slab to end of slab and transversely from out to out of bridge slab (or with the horizontal dimensions as shown on the plan of slab). Payment for prestressed panels, conventional forms, all concrete and epoxy coated reinforcing steel will be considered completely covered by the contract unit price for the slab. Variations may be encountered in the estimated quantities but the variations cannot be used for an adjustment in the contract unit price.

Method of forming the slab shall be as shown on the plans and in accordance with Sec 703. All hardware for forming the slab to be left in place as a permanent part of the structure shall be coated in accordance with ASTM A123 or ASTM B633 with a thickness class SC 4 and a finish type I, II or III.

The Estimated Quantities for Slab on Concrete NU-Girder are based on skewed precast prestressed end panels.

Class B-2 Concrete quantity is based on minimum top flange thickness and minimum joint filler thickness.

The prestressed panel quantities are not included in the table of Estimated Quantities for Slab on Concrete NU-Girder.

Hydrologic Data

Drainage Area = 6.6 mi
Design Flood Frequency = 50 years
Design Flood Discharge[2] = 3,200 cfs
Design Flood (D.F.) Elevation = 442.4
Base Flood (100-year)
Base Flood Elevation = 442.9
Base Flood Discharge = 3,800 cfs
Estimated Backwater = 1.1 ft
Average Velocity thru Opening = 8.1 ft/s
Freeboard (50-year)
Freeboard = 1.5 ft
Roadway Overtopping
Overtopping Flood Discharge = N/A
Overtopping Flood Frequency >500 years
500-year Flood Elevation = 444.0

Foundation Data

Type	Design Data		Bent Number 1	Bent Number 2
Load Bearing Pile	Pile Type and Size		HP 12x53	HP 12x53
	Number	ea	4	4
	Approximate Length Per Each	ft	20	19
	Pile Point Reinforcement	ea	All	All
	Min. Galvanized Penetration (Elev.)	ft	Full Length	Full Length
	Pile Driving Verification Method		WEAP	WEAP
	Resistance Factor		0.50	0.50
	Minimum Nominal Axial Compressive Resistance	kip	490	490

WEAP = Wave Equation Analysis of Piles

Load Bearing Pile:
Minimum Nominal Axial Compressive Resistance = Maximum Factored Loads/Resistance Factor

All piles shall be galvanized down to the minimum galvanized penetration (elevation).

Pile point reinforcement need not be galvanized. Shop drawings will not be required for pile point reinforcement.

Prebore for piles at Bents No. 1 and 2 to approximate elvation 426.00 and 428.00, respectively, to provide a minimum of 5 feet of prebore into limestone.

HP piles are anticipated to be driven to refusal on rock. Review all borings for depth of rock and restrict driving as appropriate to comply with hard rock driving criteria in accordance with Sec 702. When pile refusal on rock occurs, as approved by the engineer, the minimum nominal axial compressive resistance is verified and no additional pile driving verification method is required.

General Notes:

Design Specifications:
2020 AASHTO LRFD Bridge Design Specifications (9th Ed.)
2023 AASHTO Guide Specifications for LRFD Seismic Bridge Design (3rd Ed.)
Seismic Design Category = C (Seismic Details)
Design earthquake response spectral acceleration coefficient at 1.0 second period. S_{D1} = 0.412
Acceleration Coefficient (effective peak ground acceleration coefficient), A_S = 0.438

Design Loading:
Vehicular = HL-93
Future Wearing Surface = 35 lb/sf
Earth = 120 lb/cf
Equivalent Fluid Pressure = 45 lb/cf (Min.)
Superstructure: Simply-Supported, Non-Composite for dead load, Simply-Supported Composite for live load.

Design Unit Stresses:

Class B Concrete (Substructure)	f'c = 3,000 psi
Class B-1 Concrete (Barrier)	f'c = 4,000 psi
Class B-2 Concrete (Superstructure, except Prestressed Girders and Barrier)	f'c = 4,000 psi
Reinforcing Steel (ASTM A706 Grade 60)	fy = 60,000 psi
Structural Carbon Steel (ASTM A709 Grade 36)	fy = 36,000 psi
Structural Steel HP Pile (ASTM A709 Grade 50)	fy = 50,000 psi

For prestressed girder stresses, see Sheets No. 10 and 11.

For precast prestressed panels stresses, see Sheet No. 12.

Neoprene Pads:
Neoprene bearing pads shall be 60 durometer and shall be in accordance with Sec 716.

Joint Filler:
All joint filler shall be in accordance with Sec 1057 for preformed sponge rubber expansion and partition joint filler, except as noted.

Reinforcing Steel:
Minimum clearance to reinforcing steel shall be 1 1/2", unless otherwise shown.

Traffic Handling:
Structure to be closed during construction. Traffic to be maintained on other routes during construction. See roadway plans for traffic control.

Miscellaneous:
MoDOT Construction personnel will indicate the type of joint filler option used under the precast panels for this structure:
☐ Constant Joint Filler
☐ Variable Joint Filler

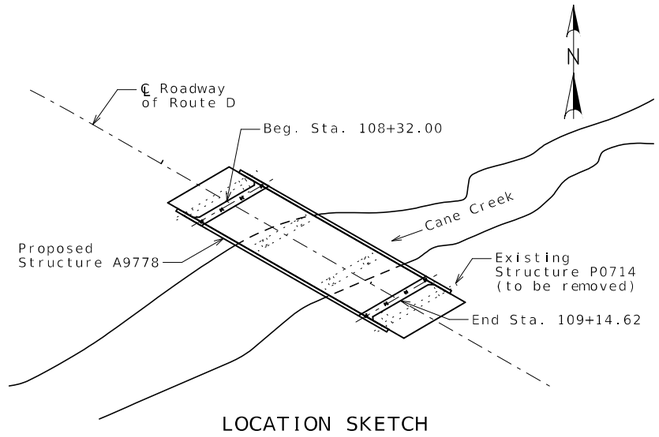

LOCATION SKETCH

STATE OF MISSOURI
CHRISTOPHER J. CRISWELL
NUMBER PE-028605
PROFESSIONAL ENGINEER
THIS SHEET HAS BEEN SIGNED, SEALED AND DATED ELECTRONICALLY.

DATE PREPARED 9/2/2026
ROUTE D | STATE MO
DISTRICT BR | SHEET NO. 2
COUNTY CAPE GIRARDEAU
JOB NO. J9S3773
CONTRACT ID.
PROJECT NO.
BRIDGE NO. A9778

DESCRIPTION | DATE

IF A SEAL IS PRESENT ON THIS SHEET IT HAS BEEN ELECTRONICALLY SEALED AND DATED.

MISSOURI HIGHWAYS AND TRANSPORTATION COMMISSION
105 WEST CAPITOL
JEFFERSON CITY, MO 65102
1-888-ASK-MODOT (1-888-275-6636)

Bartlett & West
601 MONROE STREET, SUITE 201 - JEFFERSON CITY, MO 65101
PHONE 573-634-3181 - FAX 573-634-7904
CERTIFICATE OF AUTHORITY NO. 000167 - ENGINEERING
WWW.BARTWEST.COM

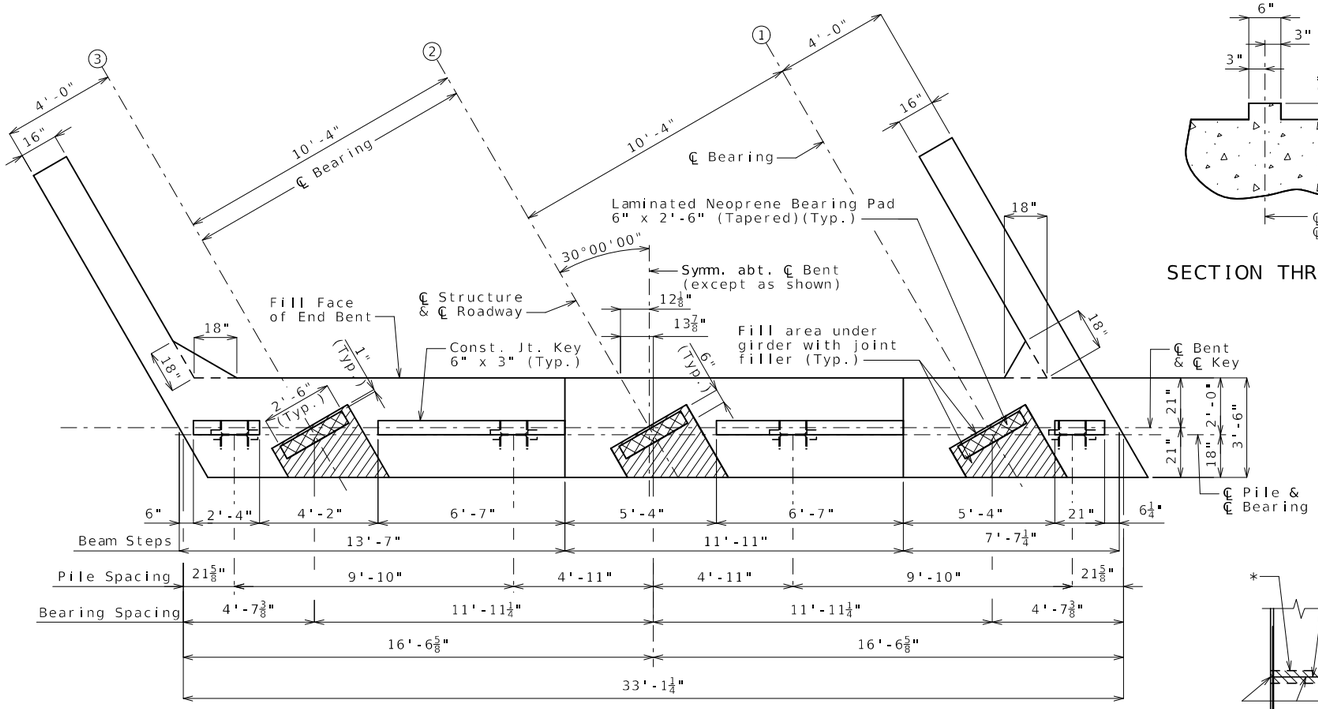

PLAN OF BEAM SHOWING DIMENSIONS

SECTION THRU KEY

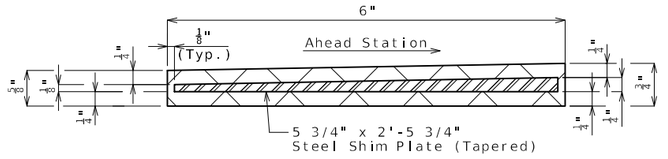

SECTION THRU LAMINATED
NEOPRENE BEARING PADS (TAPERED)

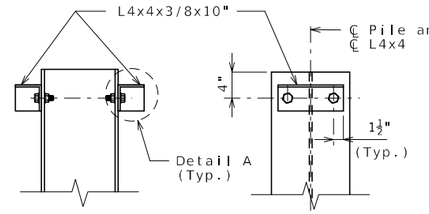

DETAILS OF HP PILE ANCHORS

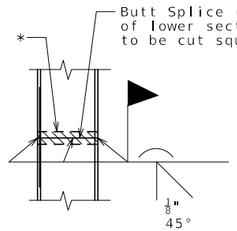

STEEL PILE SPLICE
(If required)

* Galvanizing material shall be omitted or removed one inch clear of weld locations in accordance with Sec 702.

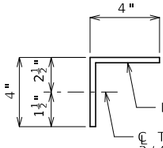

DETAIL A

Angles shall be coated with a minimum of two coats of non-aluminum epoxy mastic primer to provide a dry film thickness of 4 mils minimum, 8 mils maximum, or galvanized in accordance with Sec 1081. Bolts, washers and nuts shall be galvanized in accordance with AASHTO M 232 (ASTM A153), Class C.

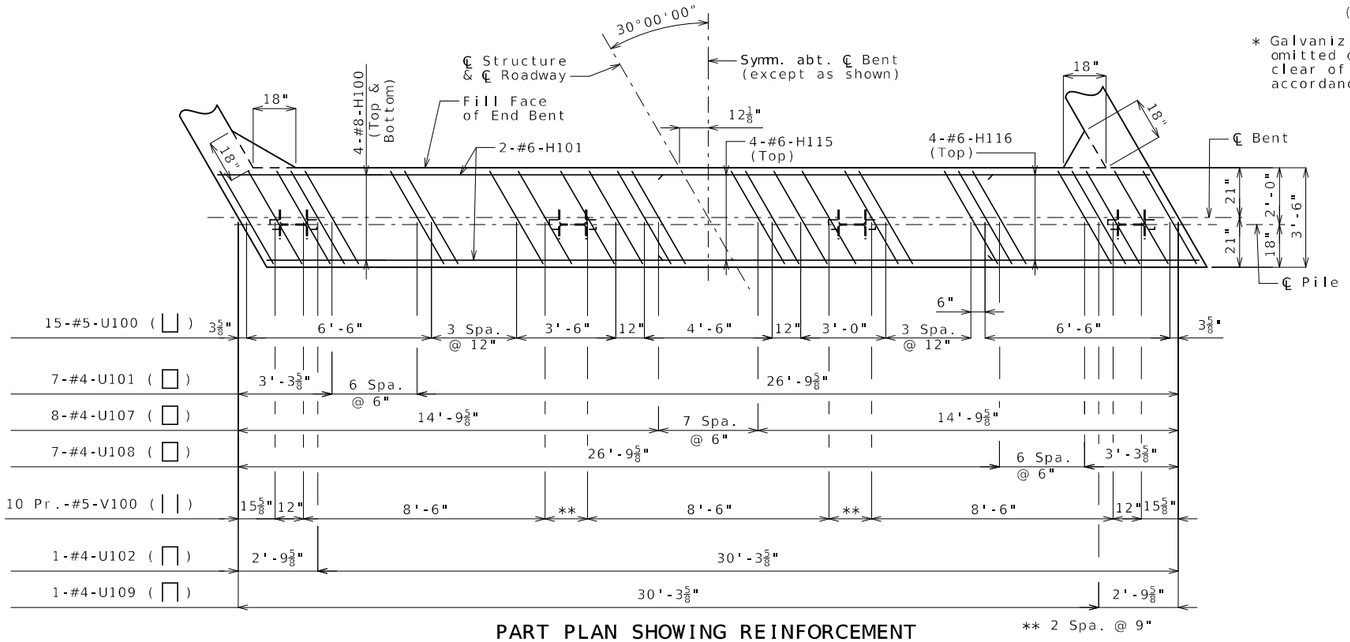

PART PLAN SHOWING REINFORCEMENT
Note: Steps and keys not shown for clarity.

** 2 Spa. @ 9"

Notes:

Work this sheet with Sheets No. 4 and 5.

Reinforcing steel shall be shifted to clear piles. U bars shall clear piles by at least 1 1/2 inches.

For details of Vertical Drain at End Bents, see Sheet No. 6.

All U bars and pairs of V bars shall be placed parallel to centerline of roadway.

Substructure Quantity Table for Bent No. 1		
Item		Quantity
Galvanized Structural Steel Piles (12 in.)	linear foot	80
Pile Wave Analysis	each	1
Pre-Bore for Piling	linear foot	60
Pile Point Reinforcement	each	4
Class B Concrete (Substructure)	cu. yard	17.3

These quantities are included in the Estimated Quantities table on Sheet No. 2.

DETAILS OF END BENT NO. 1

Detailed Jan. 2026
Checked July 2026

Note: This drawing is not to scale. Follow dimensions.

Sheet No. 3 of 22

STATE OF MISSOURI
CHRISTOPHER J. CRISWELL
NUMBER PE-026605
PROFESSIONAL ENGINEER
THIS SHEET HAS BEEN SIGNED, SEALED AND DATED ELECTRONICALLY.

DATE PREPARED 9/2/2026

ROUTE	STATE
D	MO
DISTRICT	SHEET NO.
BR	3

COUNTY: CAPE GIRARDEAU
JOB NO.: J9S3773
CONTRACT ID.:
PROJECT NO.:
BRIDGE NO.: A9778

DESCRIPTION	DATE

IF A SEAL IS PRESENT ON THIS SHEET IT HAS BEEN ELECTRONICALLY SEALED AND DATED.

MISSOURI HIGHWAYS AND TRANSPORTATION COMMISSION
105 WEST CAPITOL
JEFFERSON CITY, MO 65102
1-888-ASK-MODOT (1-888-275-6636)

Bartlett & West
601 MONROE STREET, SUITE 201 - JEFFERSON CITY, MO 65101
PHONE 573-634-3181 - FAX 573-634-7904
CERTIFICATE OF AUTHORITY NO. 000167 - ENGINEERING
WWW.BARTWEST.COM

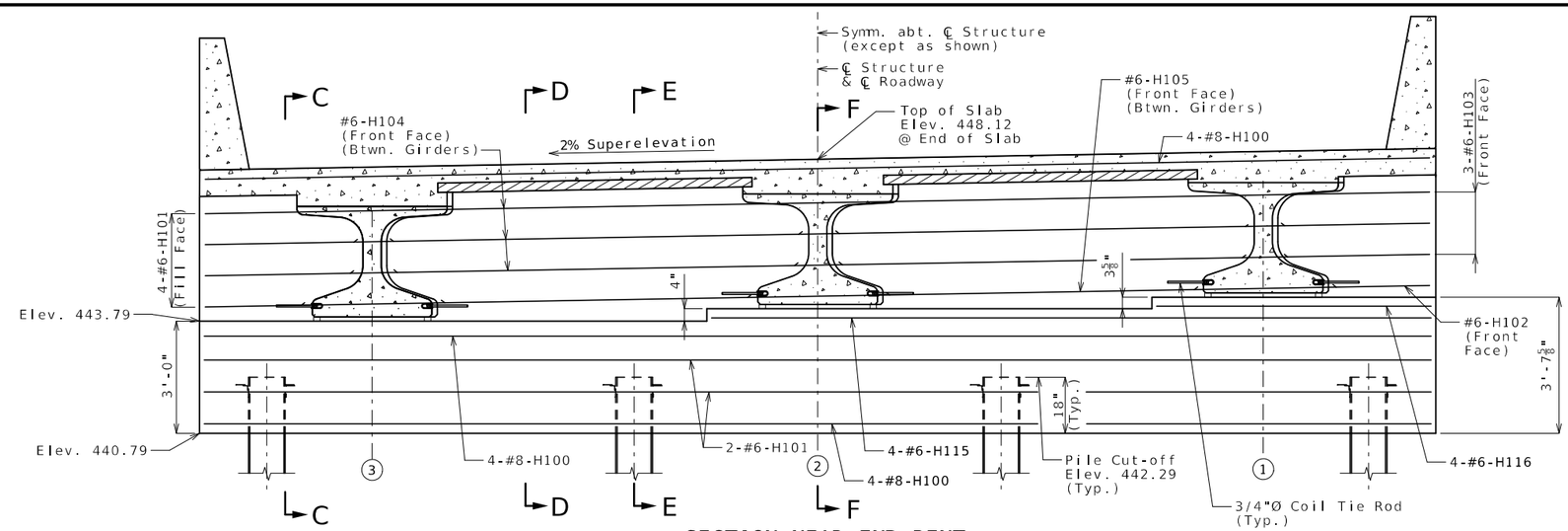

SECTION NEAR END BENT

Note: Keys not shown for clarity.

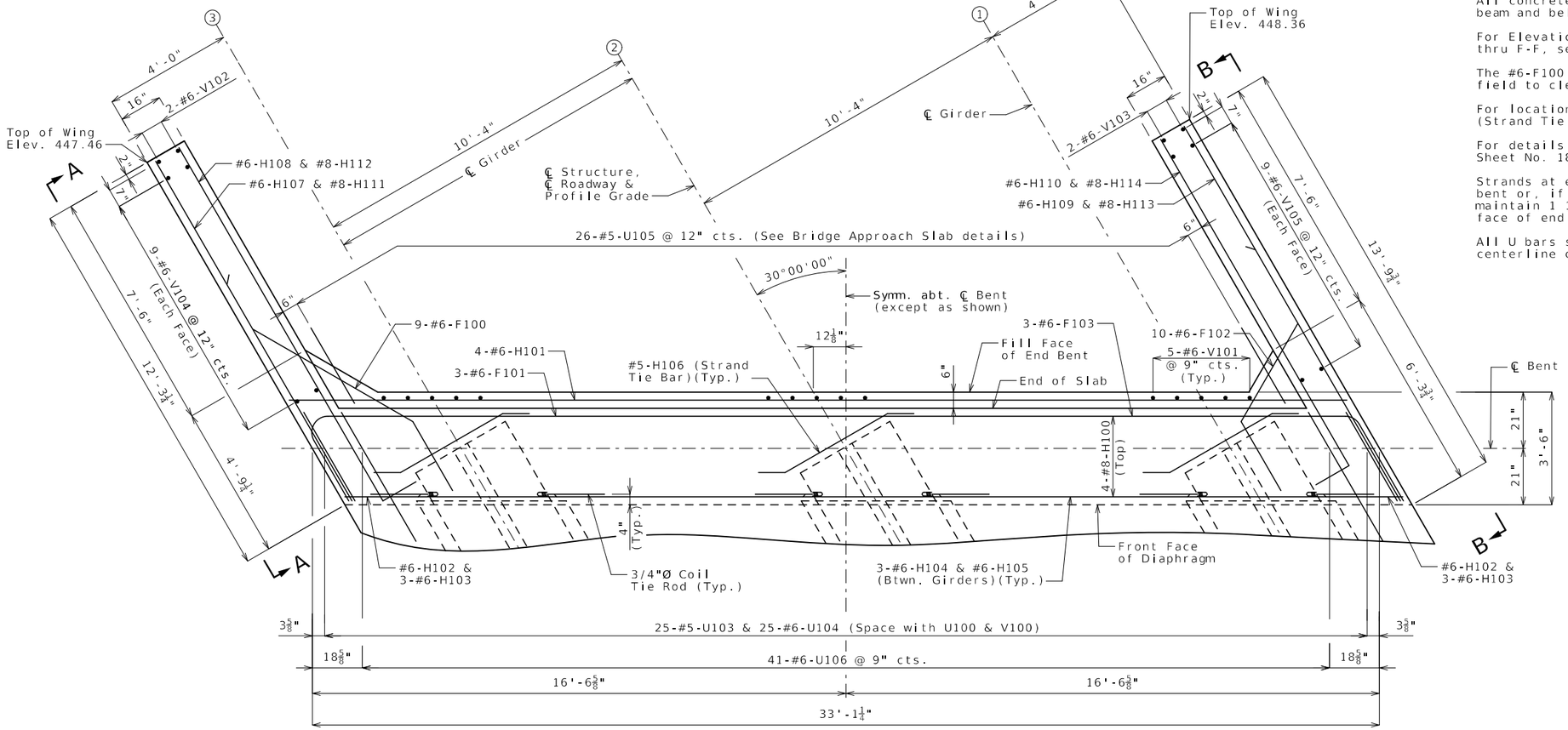

PLAN OF BEAM

DETAILS OF END BENT NO. 1

Notes:
Work this sheet with Sheets No. 3 and 5.

All concrete in the End Bent above top of beam and below top of slab shall be Class B-2.

For Elevations A-A and B-B and Sections C-C thru F-F, see Sheet No. 5.

The #6-F100 & #6-F102 bars shall be bent in field to clear girders.

For location of Coil Tie Rods and #5-H106 (Strand Tie Bar), see Sheets No. 10 and 11.

For details of Bridge Approach Slab, see Sheet No. 18.

Strands at end of the girders shall be field bent or, if necessary, cut in field to maintain 1 1/2-inch minimum clearance to fill face of end bent.

All U bars shall be placed parallel to centerline of roadway.

STATE OF MISSOURI
CHRISTOPHER J. CRISWELL
NUMBER PE-028605
PROFESSIONAL ENGINEER
THIS SHEET HAS BEEN SIGNED, SEALED AND DATED ELECTRONICALLY.

DATE PREPARED: 9/2/2026
ROUTE: D | STATE: MO
DISTRICT: BR | SHEET NO.: 4
COUNTY: CAPE GIRARDEAU
JOB NO.: J9S3773
CONTRACT ID.:
PROJECT NO.:
BRIDGE NO.: A9778

DESCRIPTION | DATE

IF A SEAL IS PRESENT ON THIS SHEET IT HAS BEEN ELECTRONICALLY SEALED AND DATED.

MISSOURI HIGHWAYS AND TRANSPORTATION COMMISSION
105 WEST CAPITOL
JEFFERSON CITY, MO 65102
1-888-ASK-MODOT (1-888-275-6636)

Bartlett & West
601 MONROE STREET, SUITE 201 - JEFFERSON CITY, MO 65101
PHONE 573-634-3181 - FAX 573-634-7904
CERTIFICATE OF AUTHORITY NO. 000167 - ENGINEERING
WWW.BARTWEST.COM

Detailed Jan. 2026
Checked July 2026

Note: This drawing is not to scale. Follow dimensions.

pw://bartwest-pw.bentley.com:bartwest-pw-04/Documents/19000/19421.M00 - MoDOT Cape Girardeau County Bridge Replacements/OpenRoads Designer/Cape D Plan sheets/A9778/B_A9778_004_J9S3773_end_bt_1.2.dgn 1:33:04 PM 9/2/2026

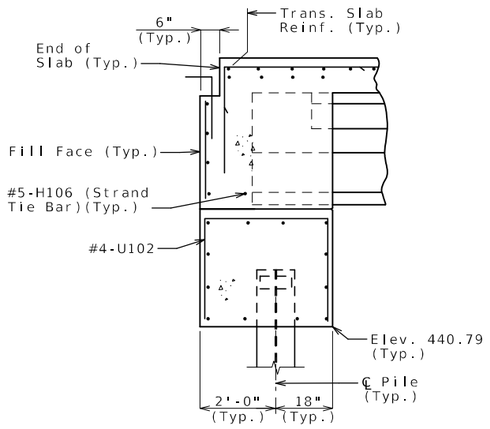

SECTION C-C

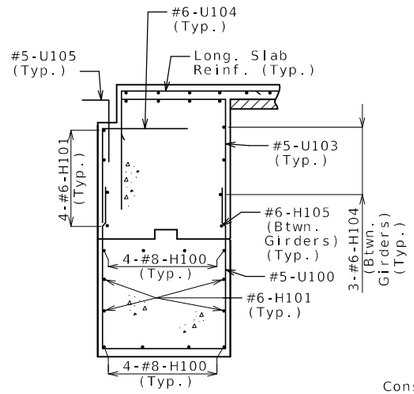

SECTION D-D

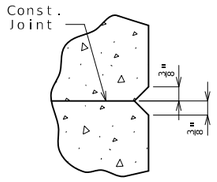

CHAMFER DETAIL

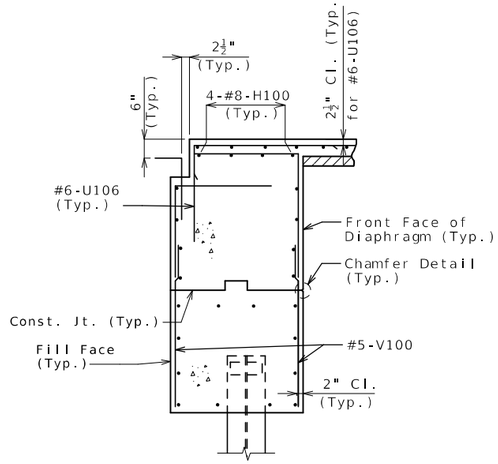

SECTION E-E

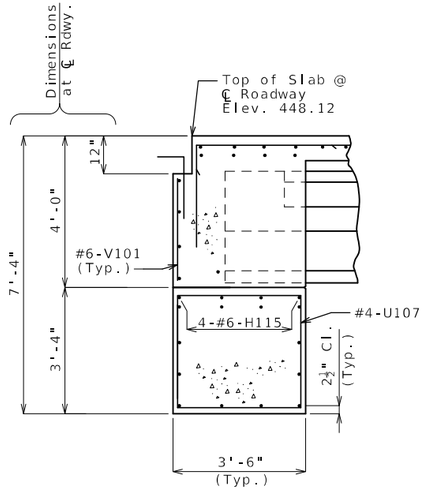

SECTION F-F

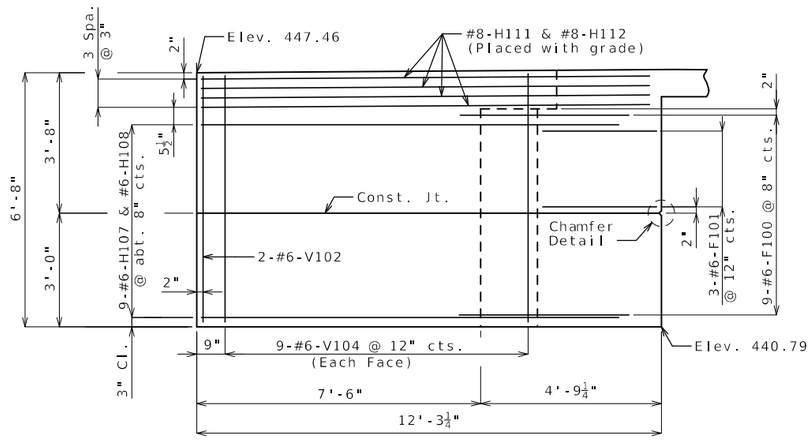

ELEVATION A-A

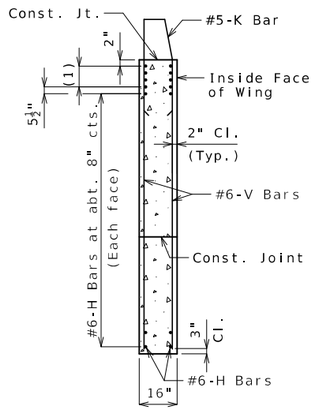

TYPICAL SECTION THRU WING

(1) #8-H Bars at 3" cts. (Each face)(Place with grade)

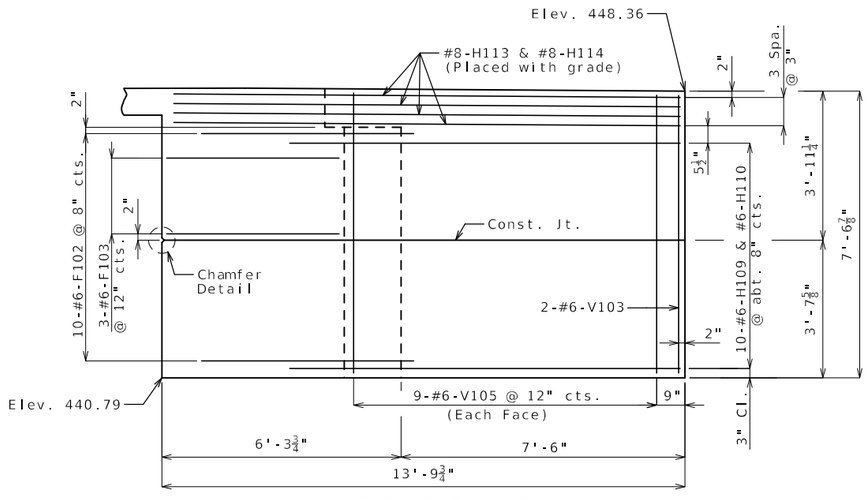

ELEVATION B-B

Notes:

For reinforcement of the Type D Barrier not shown, see Sheet No. 17.

Work this sheet with Sheets No. 3 and 4.

DETAILS OF END BENT NO. 1

Detailed Jan. 2026
Checked July 2026

Note: This drawing is not to scale. Follow dimensions.

pw://bartwest-pw.bentley.com:bartwest-pw-04/Documents/19000/19421.M00 - MoDOT Cape Girardeau County Bridge Replacements/OpenRoads Designer/Cape D Plan sheets/A9778/B_A9778_005_J9S3773_end bt_1.3.dgn 3:45:04 AM 9/2/2026

STATE OF MISSOURI
CHRISTOPHER J. CRISWELL
NUMBER PE-026605
PROFESSIONAL ENGINEER
THIS SHEET HAS BEEN SIGNED, SEALED AND DATED ELECTRONICALLY.

DATE PREPARED 9/2/2026
ROUTE D | STATE MO
DISTRICT BR | SHEET NO. 5
COUNTY CAPE GIRARDEAU
JOB NO. J9S3773
CONTRACT ID.
PROJECT NO.
BRIDGE NO. A9778

DESCRIPTION	DATE

IF A SEAL IS PRESENT ON THIS SHEET IT HAS BEEN ELECTRONICALLY SEALED AND DATED.

MISSOURI HIGHWAYS AND TRANSPORTATION COMMISSION
105 WEST CAPITOL
JEFFERSON CITY, MO 65102
1-888-ASK-MODOT (1-888-275-6636)

Bartlett & West
601 MONROE STREET, SUITE 201 - JEFFERSON CITY, MO 65101
PHONE 573-634-3181 - FAX 573-634-7904
CERTIFICATE OF AUTHORITY NO. 000167 - ENGINEERING
WWW.BARTWEST.COM

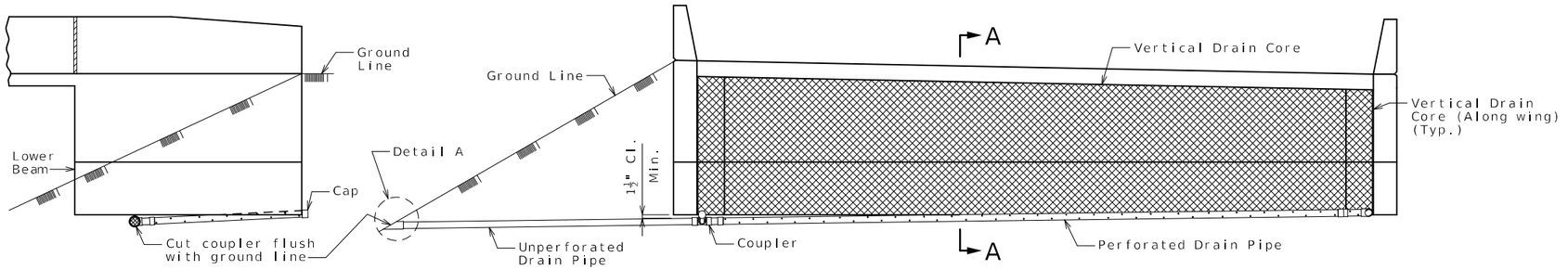

ELEVATION OF WING

ELEVATION OF END BENT

(End Bent No. 1 shown, End Bent No. 2 similar.)

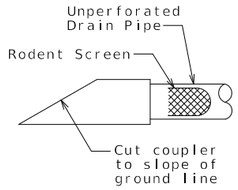

DETAIL A

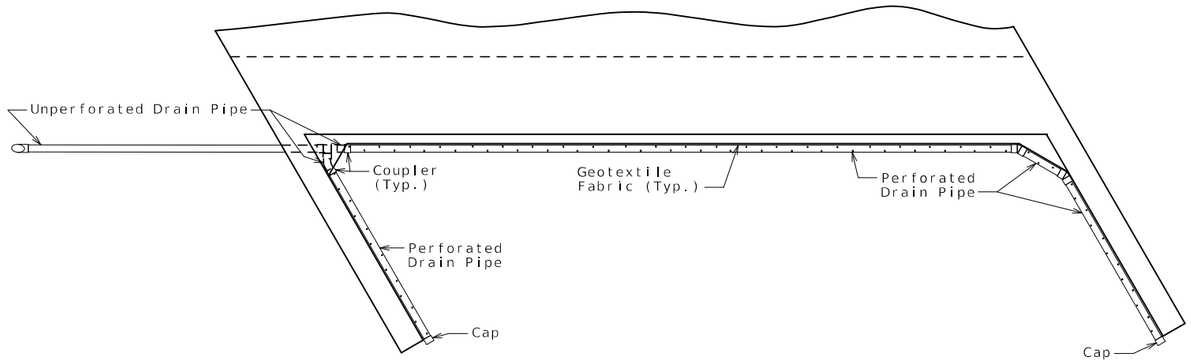

PLAN OF END BENT

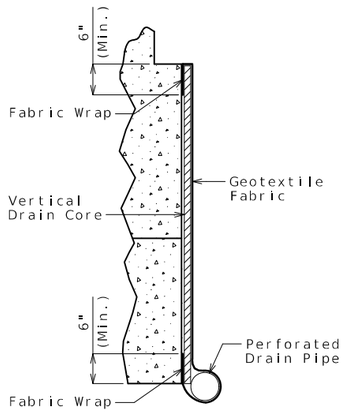

PART SECTION A-A

(Section thru wing similar)

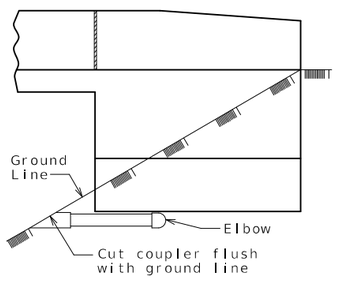

ELEVATION OF WING

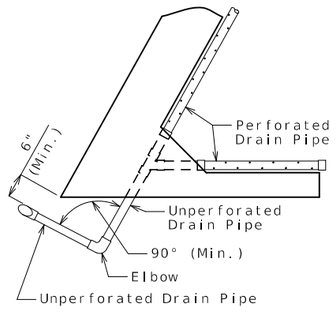

PART PLAN

OPTIONAL TURNED DRAIN

(Use only when straight drain is not practical.)

General Notes:

All drain pipe shall be sloped 1 to 2 percent.

Drain pipe may be either 6-inch diameter corrugated metallic-coated steel pipe underdrain, 4-inch diameter corrugated polyvinyl chloride (PVC) drain pipe, or 4-inch diameter corrugated polyethylene (PE) drain pipe.

Drain pipe shall be placed at fill face of end bent and inside face of wings. The pipe shall slope to lowest grade of ground line, also missing the lower beam of end bent by a minimum of 1 1/2 inches.

Perforated pipe shall be placed at fill face side and inside face of wings at the bottom of end bent and plain pipe shall be used where the vertical drain ends to the exit at ground line.

See roadway plan for details of porous backfill at each bridge end.

VERTICAL DRAIN AT END BENTS

Detailed Jan. 2026
Checked July 2026

Note: This drawing is not to scale. Follow dimensions.

STATE OF MISSOURI
CHRISTOPHER J. CRISWELL
NUMBER PE-028605
PROFESSIONAL ENGINEER
THIS SHEET HAS BEEN SIGNED, SEALED AND DATED ELECTRONICALLY.

DATE PREPARED 9/2/2026

ROUTE	STATE
D	MO
DISTRICT	SHEET NO.
BR	6

COUNTY: CAPE GIRARDEAU
JOB NO.: J9S3773
CONTRACT ID.:
PROJECT NO.:
BRIDGE NO.: A9778

DESCRIPTION	DATE

IF A SEAL IS PRESENT ON THIS SHEET IT HAS BEEN ELECTRONICALLY SEALED AND DATED.

MISSOURI HIGHWAYS AND TRANSPORTATION COMMISSION
105 WEST CAPITOL
JEFFERSON CITY, MO 65102
1-888-ASK-MODOT (1-888-275-6636)

Bartlett & West
601 MONROE STREET, SUITE 201 - JEFFERSON CITY, MO 65101
PHONE 573-634-3181 - FAX 573-634-7904
CERTIFICATE OF AUTHORITY NO. 000167 - ENGINEERING
WWW.BARTWEST.COM

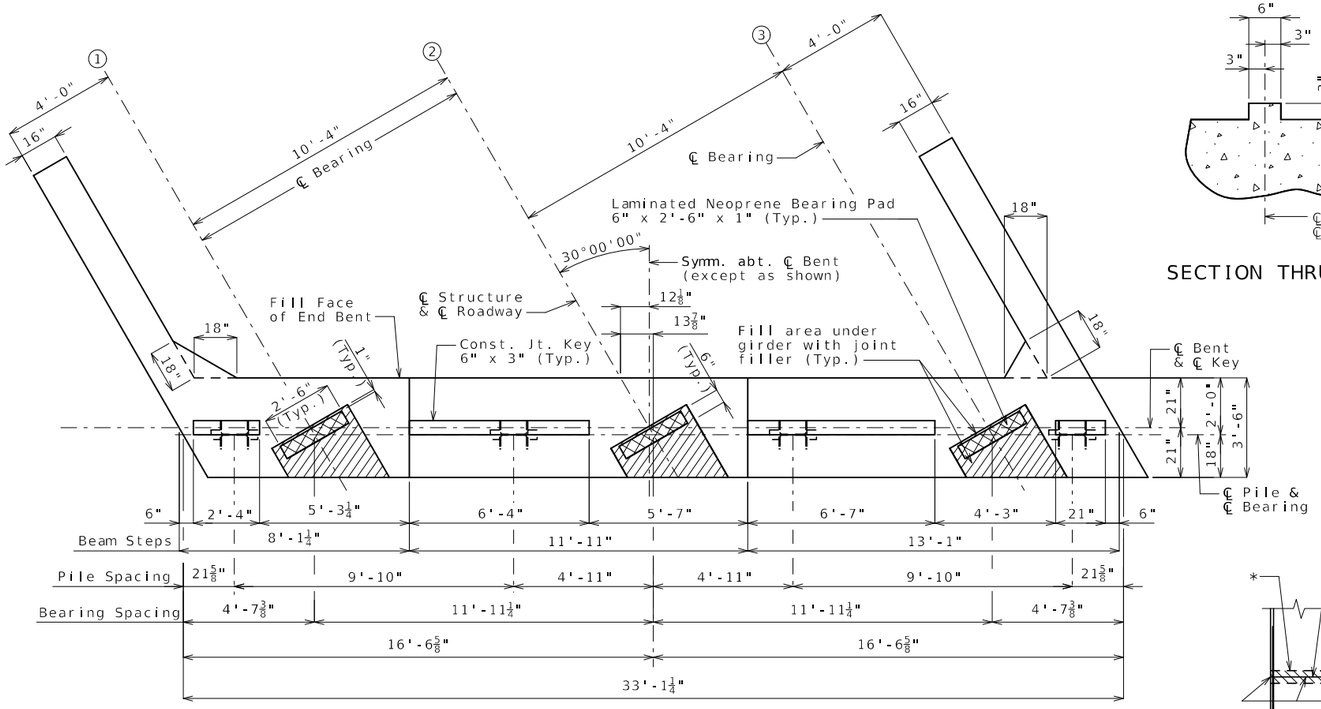

PLAN OF BEAM SHOWING DIMENSIONS

SECTION THRU KEY

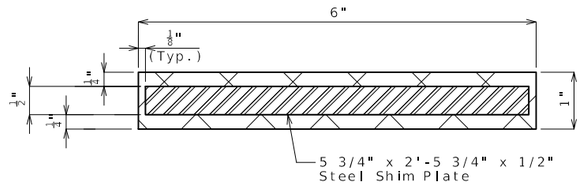

SECTION THRU LAMINATED
NEOPRENE BEARING PADS

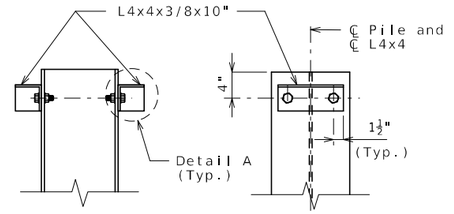

DETAILS OF HP PILE ANCHORS

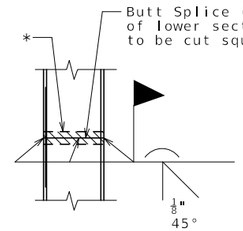

STEEL PILE SPLICE
(If required)

* Galvanizing material shall be omitted or removed one inch clear of weld locations in accordance with Sec 702.

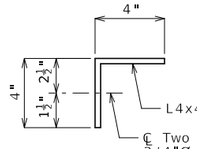

DETAIL A

Angles shall be coated with a minimum of two coats of non-aluminum epoxy mastic primer to provide a dry film thickness of 4 mils minimum, 8 mils maximum, or galvanized in accordance with Sec 1081. Bolts, washers and nuts shall be galvanized in accordance with AASHTO M 232 (ASTM A153), Class C.

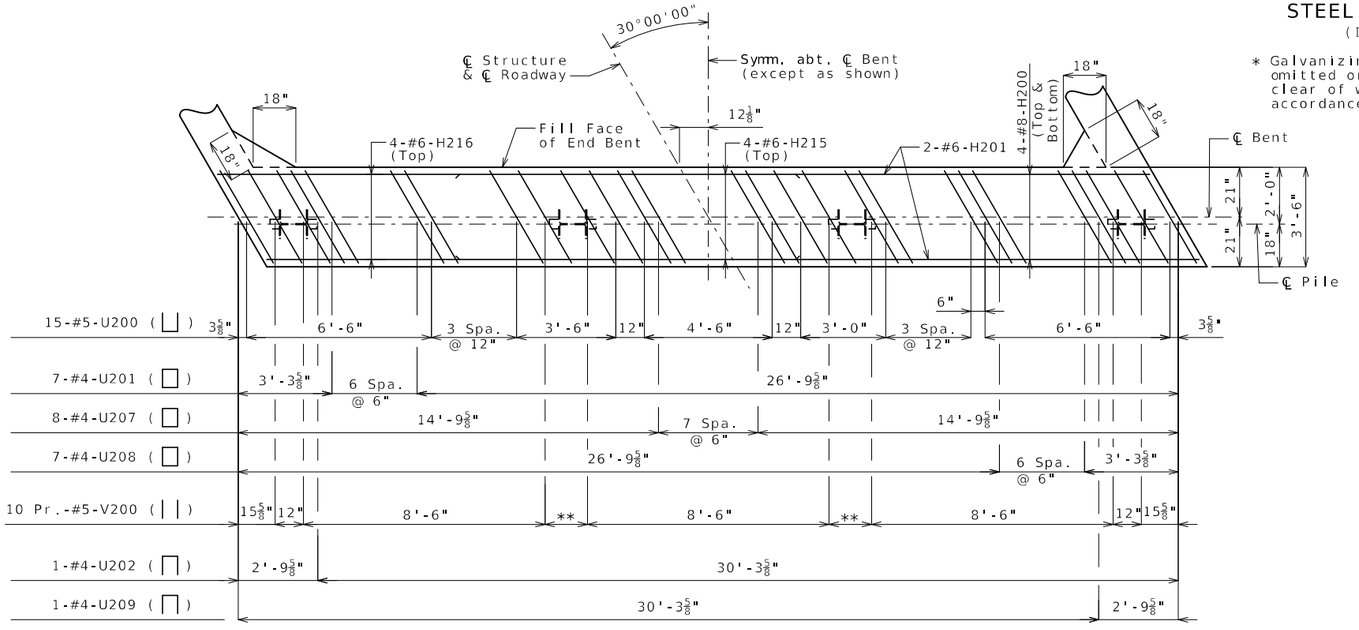

PART PLAN SHOWING REINFORCEMENT
Note: Steps and keys not shown for clarity.

** 2 Spa. @ 9"

Notes:

Work this sheet with Sheets No. 8 and 9.

Reinforcing steel shall be shifted to clear piles. U bars shall clear piles by at least 1 1/2 inches.

For details of Vertical Drain at End Bents, see Sheet No. 6.

All U bars and pairs of V bars shall be placed parallel to centerline of roadway.

Substructure Quantity Table for Bent No. 2		
Item		Quantity
Galvanized Structural Steel Piles (12 in.)	linear foot	76
Pile Wave Analysis	each	1
Pre-Bore for Piling	linear foot	60
Pile Point Reinforcement	each	4
Class B Concrete (Substructure)	cu. yard	17.3

These quantities are included in the Estimated Quantities table on Sheet No. 2.

DETAILS OF END BENT NO. 2

Detailed Jan. 2026
Checked July 2026

Note: This drawing is not to scale. Follow dimensions.

Sheet No. 7 of 22

STATE OF MISSOURI
CHRISTOPHER J. CRISWELL
NUMBER PE-026605
PROFESSIONAL ENGINEER
THIS SHEET HAS BEEN SIGNED, SEALED AND DATED ELECTRONICALLY.

DATE PREPARED
9/2/2026

ROUTE	STATE
D	MO
DISTRICT	SHEET NO.
BR	7

COUNTY
CAPE GIRARDEAU

JOB NO.
J9S3773

CONTRACT ID.

PROJECT NO.

BRIDGE NO.
A9778

DESCRIPTION	DATE

IF A SEAL IS PRESENT ON THIS SHEET IT HAS BEEN ELECTRONICALLY SEALED AND DATED.

MISSOURI HIGHWAYS AND TRANSPORTATION COMMISSION
MoDOT
105 WEST CAPITOL
JEFFERSON CITY, MO 65102
1-888-ASK-MODOT (1-888-275-6636)

Bartlett & West
601 MONROE STREET, SUITE 201 - JEFFERSON CITY, MO 65101
PHONE 573-634-3181 - FAX 573-634-7904
CERTIFICATE OF AUTHORITY NO. 000167 - ENGINEERING
WWW.BARTWEST.COM

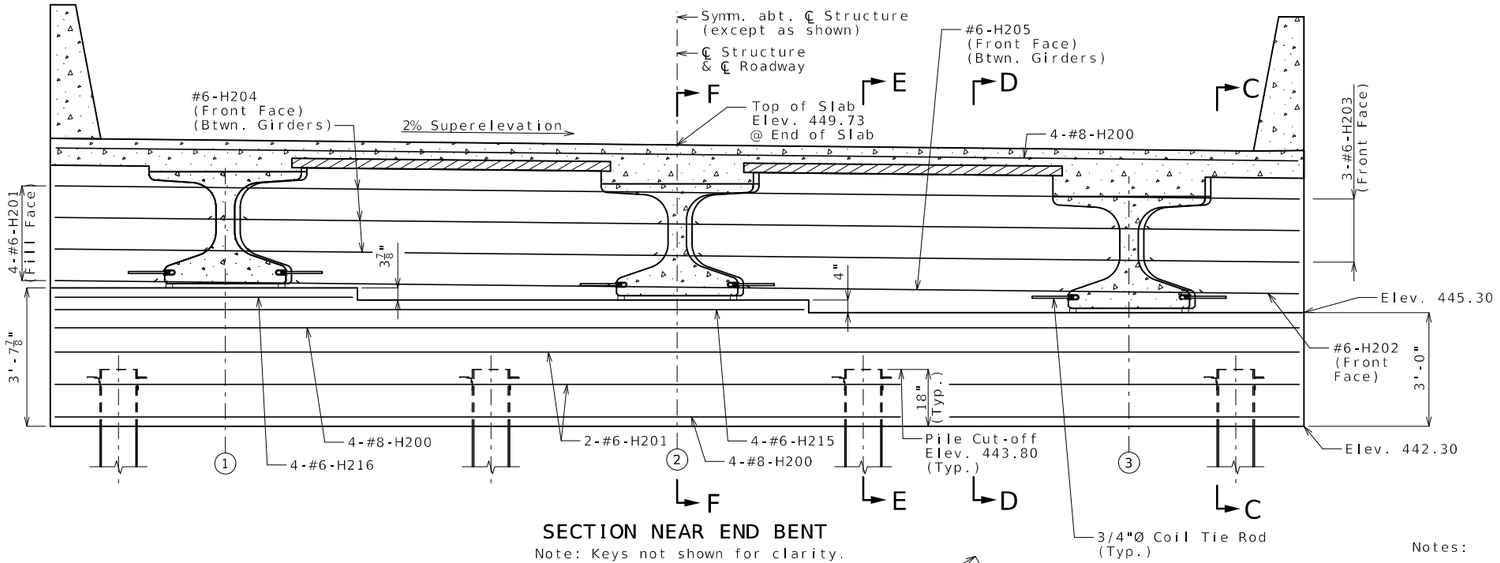

SECTION NEAR END BENT

Note: Keys not shown for clarity.

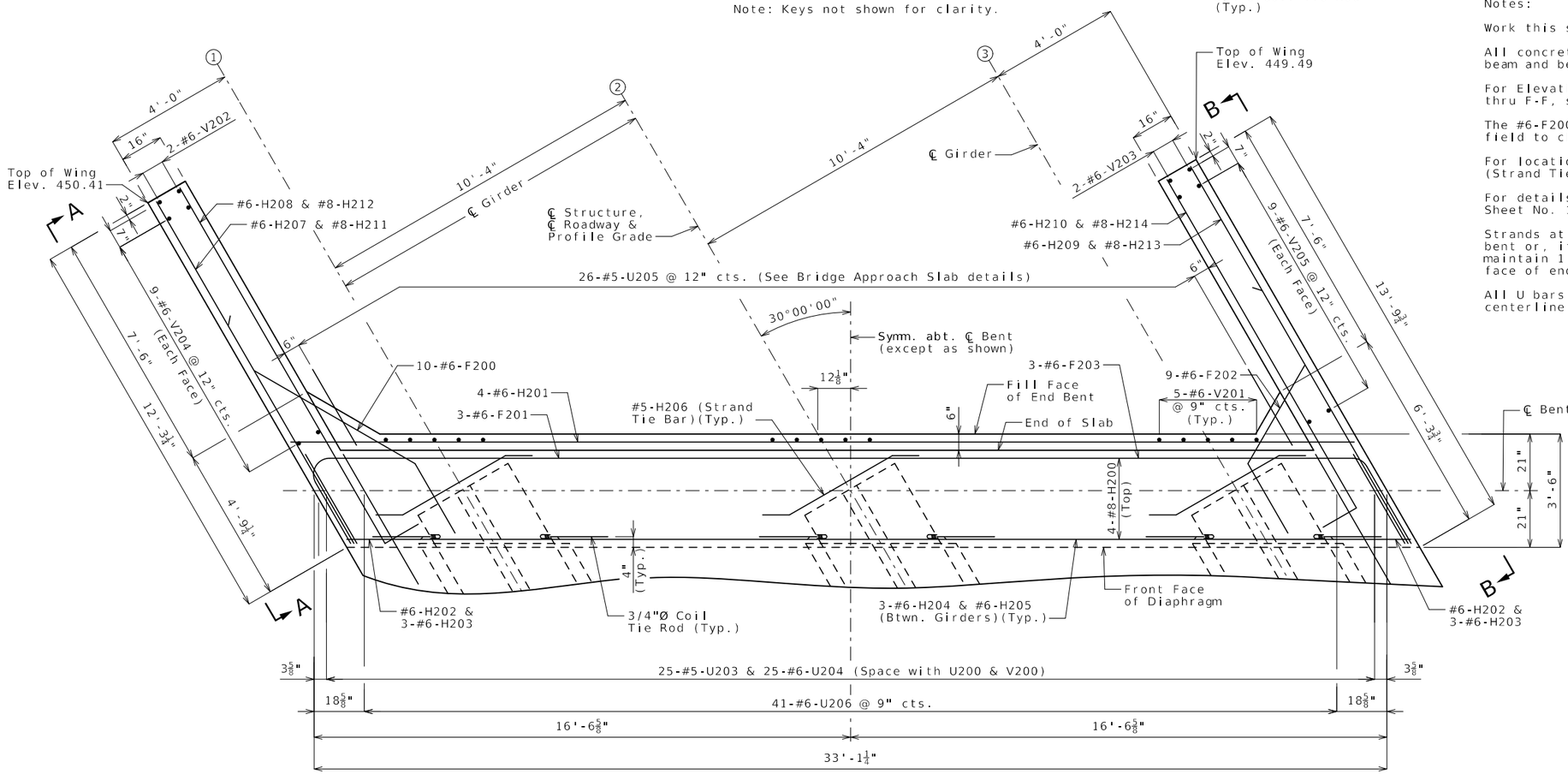

PLAN OF BEAM

DETAILS OF END BENT NO. 2

Notes:

Work this sheet with Sheets No. 7 and 9.

All concrete in the End Bent above top of beam and below top of slab shall be Class B-2.

For Elevations A-A and B-B and Sections C-C thru F-F, see Sheet No. 9.

The #6-F200 & #6-F202 bars shall be bent in field to clear girders.

For location of Coil Tie Rods and #5-H206 (Strand Tie Bar), see Sheets No. 10 and 11.

For details of Bridge Approach Slab, see Sheet No. 18.

Strands at end of the girders shall be field bent or, if necessary, cut in field to maintain 1 1/2-inch minimum clearance to fill face of end bent.

All U bars shall be placed parallel to centerline of roadway.

STATE OF MISSOURI
CHRISTOPHER J. CRISWELL
NUMBER PE-026605
PROFESSIONAL ENGINEER
THIS SHEET HAS BEEN SIGNED, SEALED AND DATED ELECTRONICALLY.

DATE PREPARED 9/2/2026

ROUTE	STATE
D	MO
DISTRICT	SHEET NO.
BR	8

COUNTY: CAPE GIRARDEAU
JOB NO.: J9S3773
CONTRACT ID.:
PROJECT NO.:
BRIDGE NO.: A9778

IF A SEAL IS PRESENT ON THIS SHEET IT HAS BEEN ELECTRONICALLY SEALED AND DATED.

DESCRIPTION | DATE

MISSOURI HIGHWAYS AND TRANSPORTATION COMMISSION
105 WEST CAPITOL
JEFFERSON CITY, MO 65102
1-888-ASK-MODOT (1-888-275-6636)

Bartlett & West
601 MONROE STREET, SUITE 201 - JEFFERSON CITY, MO 65101
PHONE 573-634-3181 - FAX 573-634-7904
CERTIFICATE OF AUTHORITY NO. 000167 - ENGINEERING
WWW.BARTWEST.COM

Detailed Jan. 2026
Checked July 2026

Note: This drawing is not to scale. Follow dimensions.

pw://bartwest-pw.bentley.com:bartwest-pw-04/Documents/19000/19421.M00 - MoDOT Cape Girardeau County Bridge Replacements/OpenRoads Designer/Cape D Plan sheets/A9778/B_A9778_008_J9S3773_end_bt_2.2.dgn 3:48:09 AM 9/2/2026

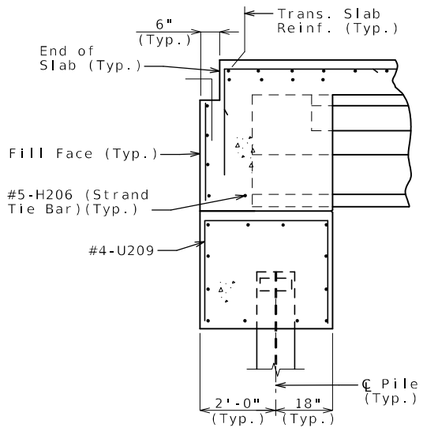

SECTION C-C

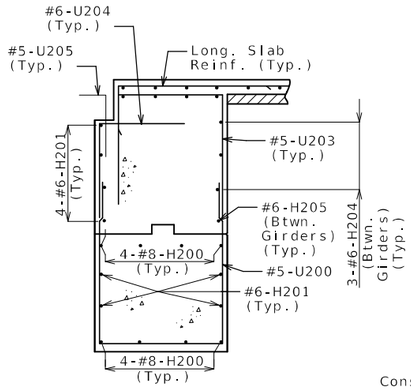

SECTION D-D

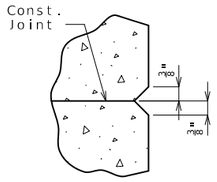

CHAMFER DETAIL

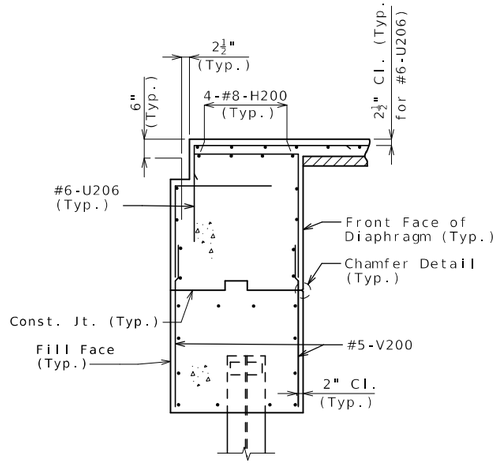

SECTION E-E

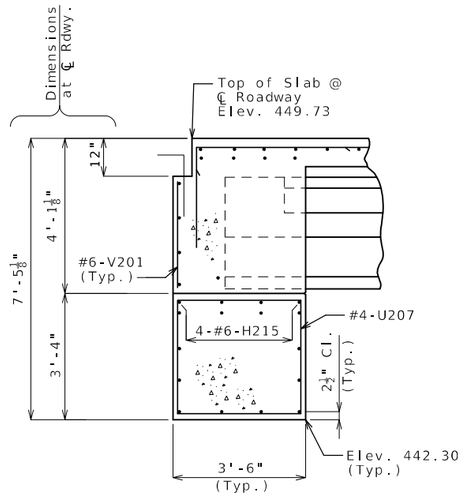

SECTION F-F

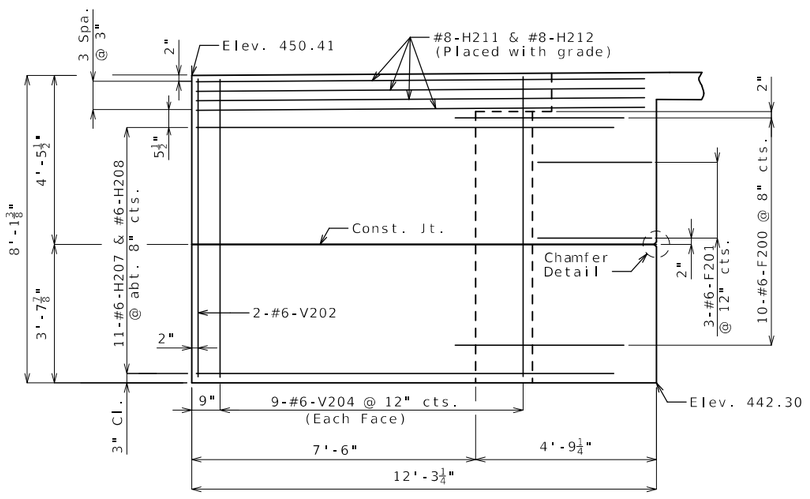

ELEVATION A-A

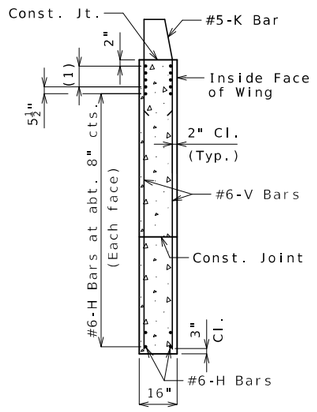

TYPICAL SECTION THRU WING

(1) #8-H Bars at 3" cts. (Each face)(Place with grade)

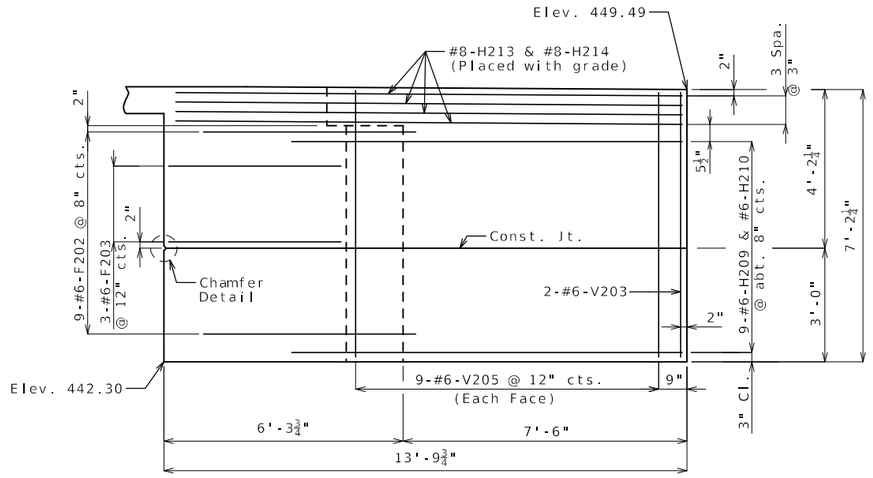

ELEVATION B-B

Notes:

For reinforcement of the Type D Barrier not shown, see Sheet No. 17.

Work this sheet with Sheets No. 7 and 8.

DETAILS OF END BENT NO. 2

Detailed Jan. 2026
Checked July 2026

Note: This drawing is not to scale. Follow dimensions.

STATE OF MISSOURI
CHRISTOPHER J. CRISWELL
NUMBER PE-026605
PROFESSIONAL ENGINEER
THIS SHEET HAS BEEN SIGNED SEALED AND DATED ELECTRONICALLY.

IF A SEAL IS PRESENT ON THIS SHEET IT HAS BEEN ELECTRONICALLY SEALED AND DATED.

DATE PREPARED 9/2/2026
ROUTE D | STATE MO
DISTRICT BR | SHEET NO. 9
COUNTY CAPE GIRARDEAU
JOB NO. J9S3773
CONTRACT ID.
PROJECT NO.
BRIDGE NO. A9778

DESCRIPTION	DATE

MISSOURI HIGHWAYS AND TRANSPORTATION COMMISSION
105 WEST CAPITOL
JEFFERSON CITY, MO 65102
1-888-ASK-MODOT (1-888-275-6636)

Bartlett & West
601 MONROE STREET, SUITE 201 - JEFFERSON CITY, MO 65101
PHONE 573-634-3181 - FAX 573-634-7904
CERTIFICATE OF AUTHORITY NO. 000167 - ENGINEERING
WWW.BARTWEST.COM

(1) Fabricator shall apply a bond breaker to this region excluding where joint filler will be applied.

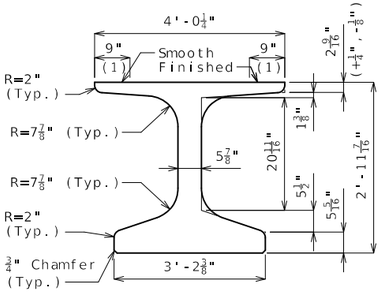

DIMENSIONS

(2) Outer strands tensioned to 2.02 kips/strand and inner strands to 8 kips/strand. Placed symmetrical about ℄ Girder. May be moved laterally in pairs.

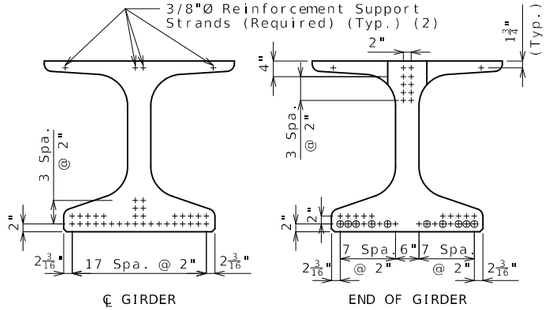

STRAND ARRANGEMENT

+ Indicates prestressing strand.

o Indicates cut & shop bend with 3'-0" projection.

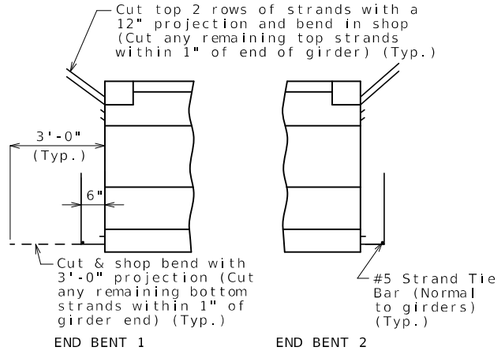

STRANDS AT GIRDER ENDS

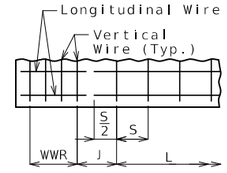

WELDED WIRE PLACEMENT

S = Vertical wire spacing

L = Length of WWR mats

J = Distance between WWR mats

Bill of Reinforcing Steel

Bars Each Girder				
No.	Size/Mark		Length	Shape
100	3	G1	2'-10"	8
2	4	G3	4'-5"	20
8	4	G6	Varies	20

Welded Wire Each Girder						
Mark	Size	S	W	L		J
WWR1	D31	4"	W12	14'-0"		4"
WWR2	D31	8"	W12	12'-0"		14⅛"
WWR3	D31	16"	W12	20'-0"		--
WWR6	D31	2"	W12	16"		4"

Bending Diagrams

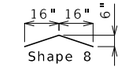

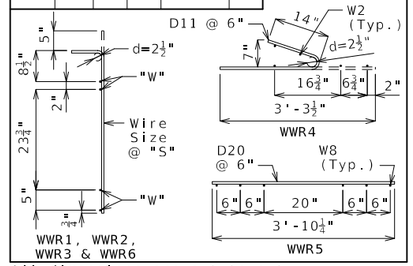

All dimensions are out to out.

Hooks and bends shall be in accordance with the CRSI Manual of Standard Practice for Detailing Reinforced Concrete Structures, Stirrup and Tie Dimensions.

Actual bar lengths are measured along centerline of bar to the nearest inch.

Minimum clearance to reinforcing shall be 1", unless otherwise shown.

All bar reinforcement shall be ASTM A615 or A706 Grade 60.

WWR shall not be epoxy coated.

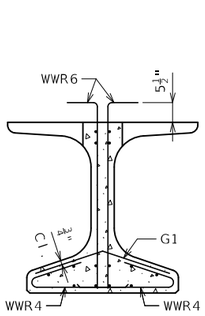

SECTION A-A

Strands not shown for clarity.

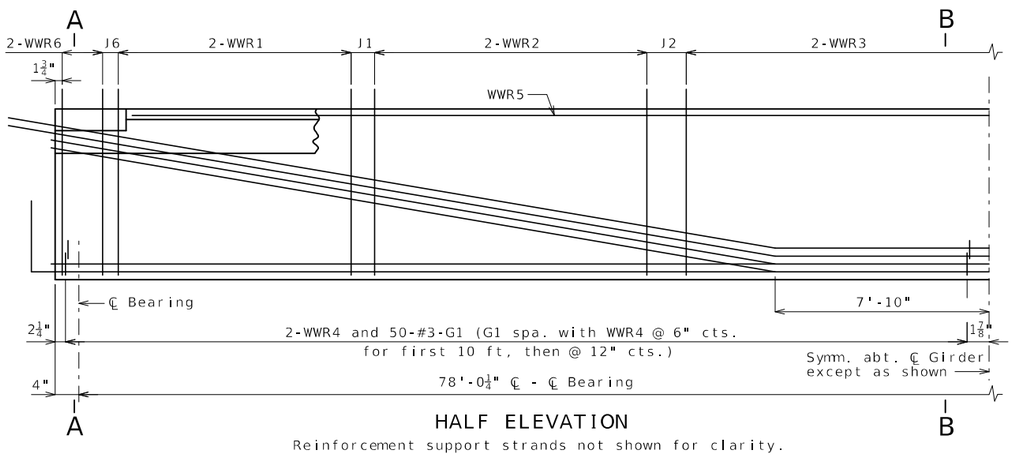

HALF ELEVATION

Reinforcement support strands not shown for clarity.

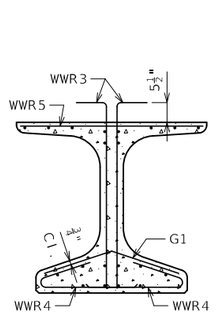

SECTION B-B

Strands not shown for clarity.

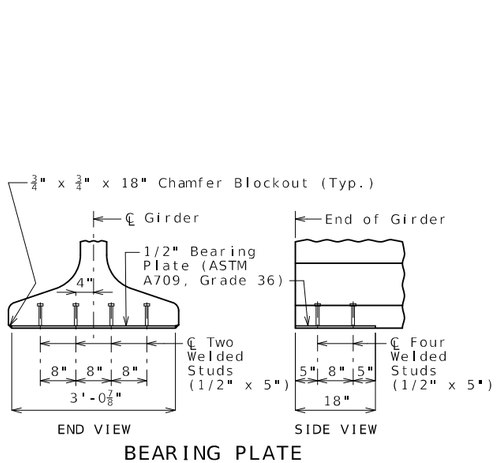

BEARING PLATE

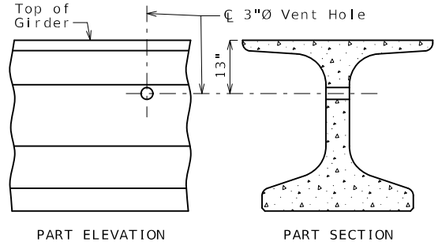

VENT HOLE

Place vent holes at or near upgrade 1/3 point of girders and clear reinforcing steel or strands by 1 1/2" minimum.

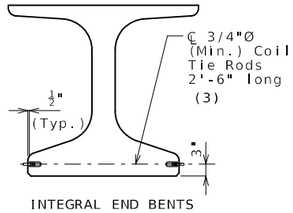

COIL TIES

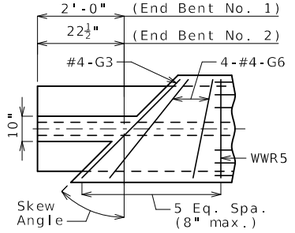

ALL GIRDERS AT END BENTS

TOP FLANGE BLOCKOUT

General Notes:

Concrete for prestressed beams shall be Class A-1 with f'c = 8000 psi and f'ci = 6500 psi.

Use 34 strands, 0.6"Ø Grade 270, with an initial prestress force of 1494 kips.

Pretensioned members shall be in accordance with Sec 1029.

Fabricator shall be responsible for location and design of lifting devices.

Exterior and interior girders are the same except for application of bond breaker.

The contractor shall provide bracing necessary for lateral and torsional stability of the girders during construction of the concrete slab and remove the bracing after the slab has attained 75% design strength. Contractor shall not drill holes in the girders.

For Girder Camber Diagram, see Sheet No. 13.

For location of coil ties at integral end bents, see Sheets No. 4 and 8.

Alternate bar reinforcing steel details are provided and may be used. The same type of reinforcing steel shall be used for all girders in all spans.

NU-GIRDERS - SPAN (1-2)

Detailed Jan. 2026
Checked July 2026

Note: This drawing is not to scale. Follow dimensions.

STATE OF MISSOURI
CHRISTOPHER J. CASWELL
NUMBER PE-026605
PROFESSIONAL ENGINEER
THIS SHEET HAS BEEN SIGNED, SEALED AND DATED ELECTRONICALLY.

DATE PREPARED 9/2/2026

ROUTE D | STATE MO

DISTRICT BR | SHEET NO. 10

COUNTY CAPE GIRARDEAU

JOB NO. J9S3773

CONTRACT ID.

PROJECT NO.

BRIDGE NO. A9778

DESCRIPTION | DATE

MISSOURI HIGHWAYS AND TRANSPORTATION COMMISSION
105 WEST CAPITOL
JEFFERSON CITY, MO 65102
1-888-ASK-MODOT (1-888-275-6636)
Bartlett & West
601 MONROE STREET, SUITE 201 - JEFFERSON CITY, MO 65101
PHONE 573-634-3181 - FAX 573-634-7904
CERTIFICATE OF AUTHORITY NO. 000167 - ENGINEERING
WWW.BARTWEST.COM

IF A SEAL IS PRESENT ON THIS SHEET IT HAS BEEN ELECTRONICALLY SEALED AND DATED.

(1) Fabricator shall apply a bond breaker to this region excluding where joint filler will be applied.

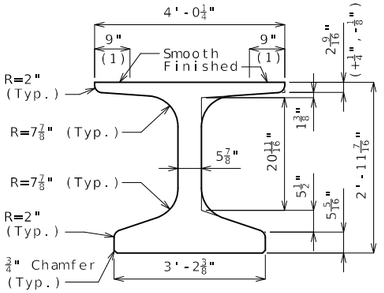

DIMENSIONS

(2) Outer strands tensioned to 2.02 kips/strand and inner strands to 8 kips/strand. Placed symmetrical about ℄ Girder. May be moved laterally in pairs.

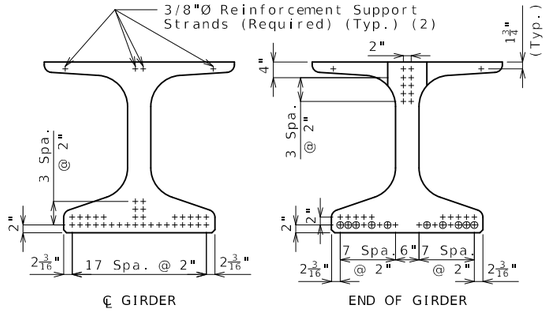

STRAND ARRANGEMENT

\+ Indicates prestressing strand.

o Indicates cut & shop bend with 3'-0" projection.

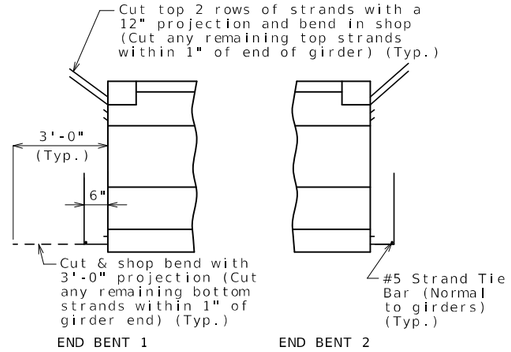

STRANDS AT GIRDER ENDS

Bill of Reinforcing Steel - Each Girder			
No.	Size/ Mark	Length	Shape
230	5 B1	4'-4"	11S
250	4 D1	4'-0"	9S
2	4 G3	4'-5"	20
8	4 G6	Varies	20

Bending Diagrams

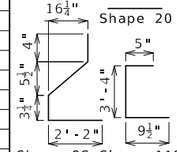

Welded Wire Reinforcement - Each Girder

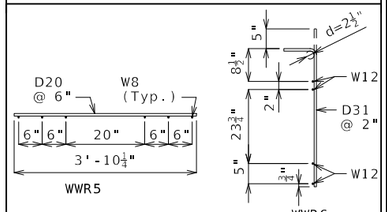

All dimensions are out to out.

Hooks and bends shall be in accordance with the CRSI Manual of Standard Practice for Detailing Reinforced Concrete Structures, Stirrup and Tie Dimensions.

Actual bar lengths are measured along centerline of bar to the nearest inch.

Minimum clearance to reinforcing shall be one inch.

All bar reinforcement shall be ASTM A615 or A706 Grade 60.

The two D1 bars may be furnished as one bar at the fabricator's option.

All B1 bars shall be epoxy coated.

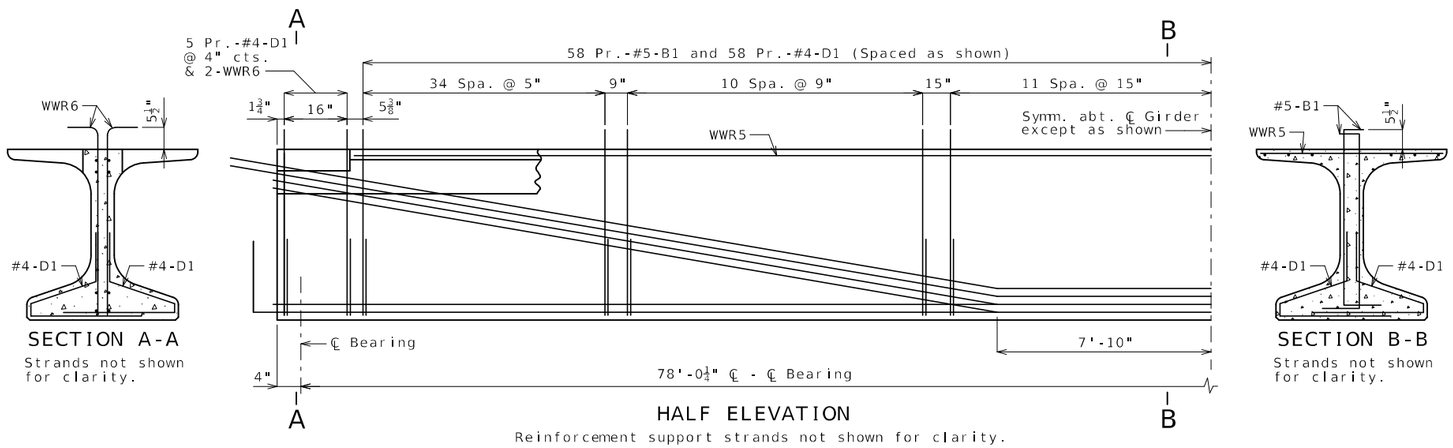

HALF ELEVATION

Reinforcement support strands not shown for clarity.

SECTION A-A

Strands not shown for clarity.

SECTION B-B

Strands not shown for clarity.

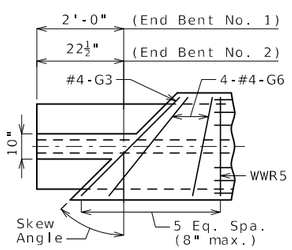

ALL GIRDERS AT END BENTS

TOP FLANGE BLOCKOUT

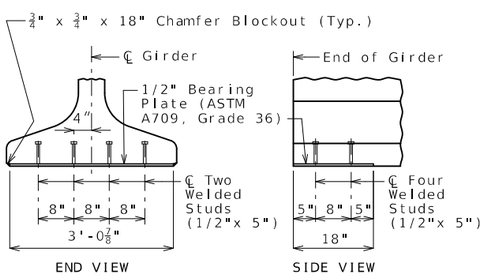

BEARING PLATE

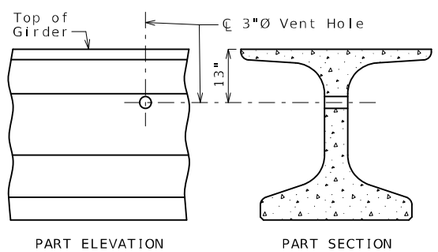

VENT HOLE

Place vent holes at or near upgrade 1/3 point of girders and clear reinforcing steel or strands by 1 1/2" minimum.

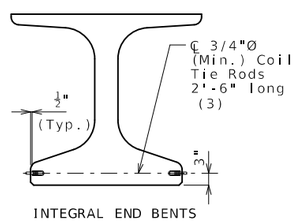

INTEGRAL END BENTS

COIL TIES

General Notes:

Concrete for prestressed girders shall be Class A-1 with f'c = 8000 psi and f'ci = 6500 psi.

Use 34 strands, 0.6"Ø Grade 270, with an initial prestress force of 1494 kips.

Pretensioned members shall be in accordance with Sec 1029.

Fabricator shall be responsible for location and design of lifting devices.

Exterior and interior girders are the same except for application of bond breaker.

The contractor shall provide bracing necessary for lateral and torsional stability of the girders during construction of the concrete slab and remove the bracing after the slab has attained 75% design strength. Contractor shall not drill holes in the girders.

For Girder Camber Diagram, see Sheet No. 13.

For location of coil ties at integral end bents, see Sheets No. 4 and 8.

Alternate bar reinforcing steel details are provided and may be used. The same type of reinforcing steel shall be used for all girders in all spans.

STATE OF MISSOURI
CHRISTOPHER J. CASWELL
NUMBER PE-026605
PROFESSIONAL ENGINEER
THIS SHEET HAS BEEN SIGNED, SEALED AND DATED ELECTRONICALLY.

DATE PREPARED 9/2/2026

ROUTE D | STATE MO

DISTRICT BR | SHEET NO. 11

COUNTY CAPE GIRARDEAU

JOB NO. J9S3773

CONTRACT ID.

PROJECT NO.

BRIDGE NO. A9778

DESCRIPTION | DATE

IF A SEAL IS PRESENT ON THIS SHEET IT HAS BEEN ELECTRONICALLY SEALED AND DATED.

MISSOURI HIGHWAYS AND TRANSPORTATION COMMISSION
105 WEST CAPITOL
JEFFERSON CITY, MO 65102
1-888-ASK-MODOT (1-888-275-6636)

Bartlett & West
601 MONROE STREET, SUITE 201 - JEFFERSON CITY, MO 65101
PHONE 573-634-3181 - FAX 573-634-7904
CERTIFICATE OF AUTHORITY NO. 000167 - ENGINEERING
WWW.BARTWEST.COM

NU-GIRDERS (ALTERNATE REINFORCEMENT) - SPAN (1-2)

Detailed Jan. 2026
Checked July 2026

Note: This drawing is not to scale. Follow dimensions.

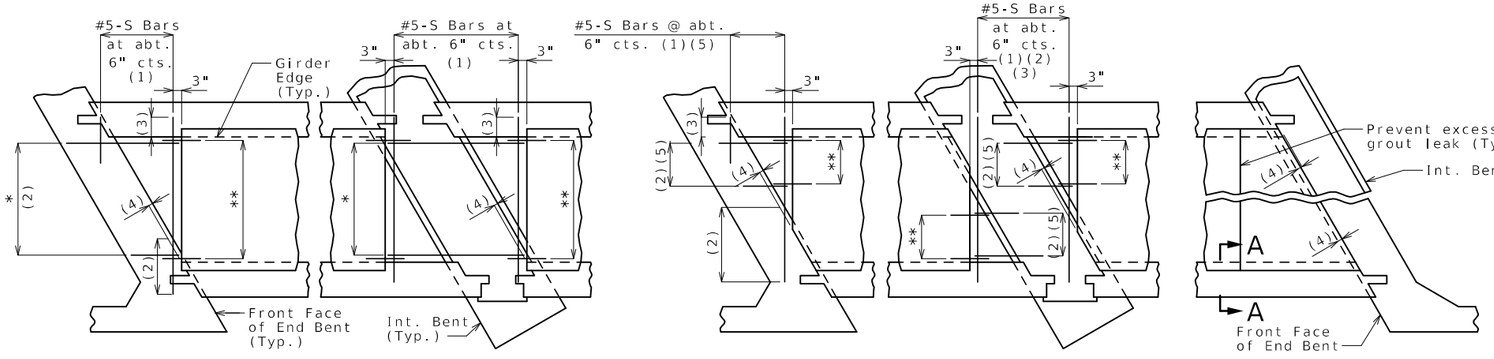

SQUARED END PANELS OR TRUNCATED END PANELS

PLAN SHOWING PANEL PLACEMENT

* #5-S Bars at abt. 9" cts. (1)
** #3-P1 at 12" cts. (End panels only)

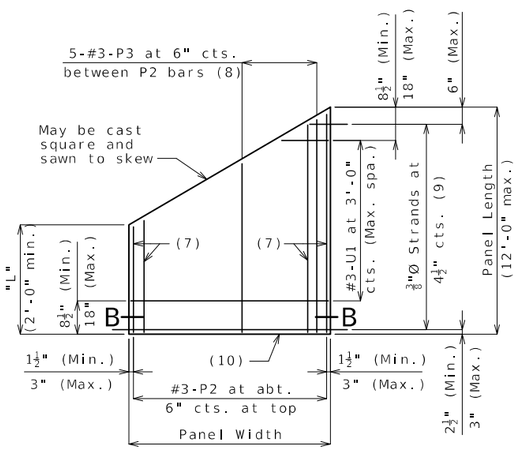

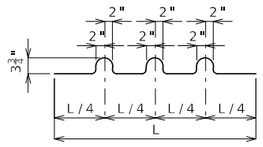

U1 Bars may be oriented at right angles to location and spacing shown. U1 Bars shall be placed between P1 bars.

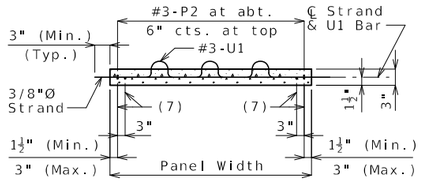

SKEWED END PANELS

Joint Filler Dimensions		
Width	Height	
	Min.	Max.
3"	1"	4"

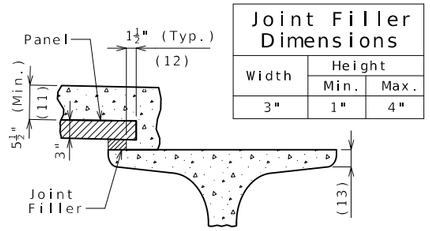

Reference Notes:

Plan of Panel Placement:
(1) S-bars shown are bottom steel in slab between panels and used with squared and truncated end panels only.

(2) Extend S-bars 18 inches beyond the front face of end bents and int. bents for squared and truncated end panels only.

(3) Extend S-bars 9 inches beyond edge of girder (Typ.).

(4) End panels shall be dimensioned 1/2" min. to 1 1/2" max. from the inside face of diaphragm.

(5) For truncated end panels, use a min. of #5-S bars at 6" crossings in openings, or min. 4x4-W7xW7.

Plans of Panels:
(6) For end panels only, P1 bars shall be 2'-0" in length and embedded 12". P1 bars will not be required for panels at squared integral end bents.

(7) #3-P2 bars near edge of panel at bottom (under strands).

(8) Use #3-P3 bars if panel is skewed 45° or greater.

(9) Any strand 2'-0" or shorter shall have a #4 reinforcing bar on each side of it, centered between strands. Strands 2'-0" or shorter may then be debonded at the fabricator's option.

(10) Optional 1/2" x 45° Chamfer one or both sides at bottom.

Section A-A:
(11) Slab thickness over prestressed panels varies due to girder camber. In order to maintain minimum slab thickness, it may be necessary to raise the grade uniformly throughout the structure. No payment will be made for additional labor or materials required for necessary grade adjustment.

(12) Contractor shall ensure proper consolidation under and between panels.

(13) At the contractor's option, the variation in slab thickness over prestressed panels may be eliminated or reduced by increasing and varying the girder top flange thickness. Dimensions shall be shown on the shop drawings.

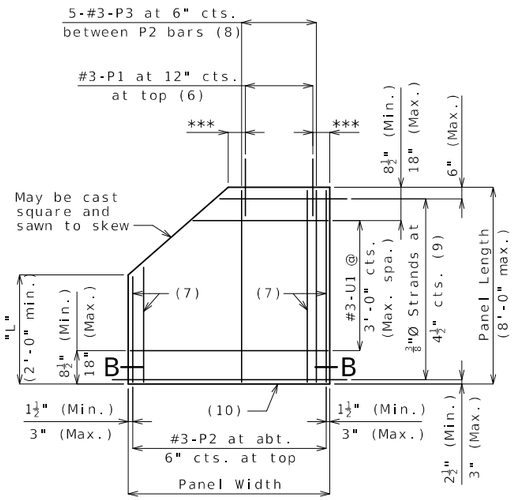

PLAN OF OPTIONAL TRUNCATED END PANEL

*** 3" (Min.), 6" (Max.)

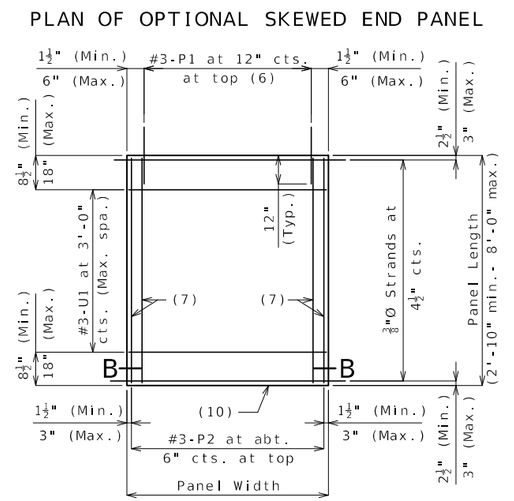

PLAN OF SQUARED PANEL

PLAN OF OPTIONAL SKEWED END PANEL

PRESTRESSED PANELS

General Notes:

Prestressed Panels:
Concrete for prestressed panels shall be Class A-1 with f'c = 6,000 psi, f'ci = 4,000 psi.

The top surface of all panels shall receive a scored finish with a depth of scoring of 1/8" perpendicular to the prestressing strands in the panels.

Prestressing tendons shall be high-tensile strength, uncoated, seven-wire, low-relaxation strands for prestressed concrete in accordance with AASHTO M 203 Grade 270, with nominal diameter of strand = 3/8" and nominal area = 0.085 sq.in. and minimum ultimate strength = 22.95 kips (270 ksi). Larger strands may be used with the same spacing and initial tension.

Initial prestressing force = 17.2 kips/strand.

The method and sequence of releasing the strands shall be shown on the shop drawings.

Suitable anchorage devices for lifting panels may be cast in panels, provided the devices are shown on the shop drawings and approved by the engineer. Panel lengths shall be determined by the contractor and shown on the shop drawings.

When squared end panels are used at skewed bents, the skewed portion shall be cast full depth. No separate payment will be made for additional concrete and reinforcing required.

Support from diaphragm forms is required under the optional skewed end until cast-in-place concrete has reached 3,000 psi compressive strength.

Prestressed panels shall be brought to saturated surface-dry (SSD) condition just prior to the deck pour. There shall be no free standing water on the panels or in the area to be cast.

The prestressed panel quantities are not included in the table of estimated quantities for the slab.

Reinforcing Steel:
All dimensions are out to out.

Hooks and bends shall be in accordance with the CRSI Manual of Standard Practice for Detailing Reinforced Concrete Structures, Stirrup and Tie Dimensions.

Minimum clearance to reinforcing steel shall be 1 1/2", unless otherwise shown.

If U1 bars interfere with placement of slab steel, U1 loops may be bent over, as necessary, to clear slab steel.

Deformed welded wire reinforcement (WWR) providing a minimum area of reinforcing perpendicular to strands of 0.22 sq in./ft, with spacing parallel to strands sufficient to ensure proper handling, may be used in lieu of the #3-P2 bars shown. Wire diameter shall not be larger than 0.375 inch. The above alternative reinforcement criteria may be used in lieu of the #3-P3 bars, when required, and placed over a width not less than 2 feet.

The following reinforcing steel shall be tied securely to the strands with the following maximum spacing in each direction:
#3-P2 bars at 16 inches.
WWR at 24 inches.

The #3-U1 bars shall be tied securely to #3-P2 bars, to WWR or to strands (when placed between P1 bars) at about 3-foot centers.

Minimum reinforcement steel length shall be 2'-0".

All reinforcement other than prestressing strands shall be epoxy coated.

Precast panels may be in contact with stirrup reinforcing in diaphragms.

S-bars are not listed in the bill of reinforcing.

Cost of S-bars will be considered completely covered by the contract unit price for the slab.

Joint Filler:
Joint filler shall be preformed fiber expansion joint material in accordance with Sec 1057 or expanded or extruded polystyrene bedding material in accordance with Sec 1073.

Use Slab Haunching Diagram on Sheet No. 13 for determining thickness of joint filler within the limits noted in the table of Joint Filler Dimensions.

Thicker material may be used on one or both sides of the girder to reduce cast-in-place concrete thickness to within tolerances.

The same thickness of preformed fiber expansion joint material shall be used under any one edge of any panel except at locations where top flange thickness may be stepped. The maximum change in thickness between adjacent panels shall be 1/2 inch. The polystyrene bedding material may be cut with a transition to match haunch height above top of flange.

Joint filler shall be glued to the girder. When thickness exceeds 1 1/2 inches, the joint filler shall be glued top and bottom. The glue used shall be the type recommended by the joint filler manufacturer.

Edges of panels shall be uniformly seated on the joint filler before slab reinforcement is placed.

STATE OF MISSOURI
CHRISTOPHER J. CRISWELL
NUMBER PE-028605
PROFESSIONAL ENGINEER
THIS SHEET HAS BEEN SIGNED, SEALED AND DATED ELECTRONICALLY.

DATE PREPARED 9/2/2026
ROUTE D | STATE MO
DISTRICT BR | SHEET NO. 12
COUNTY CAPE GIRARDEAU
JOB NO. J9S3773
CONTRACT ID.
PROJECT NO.
BRIDGE NO. A9778

DESCRIPTION	DATE

IF A SEAL IS PRESENT ON THIS SHEET IT HAS BEEN ELECTRONICALLY SEALED AND DATED.

MISSOURI HIGHWAYS AND TRANSPORTATION COMMISSION
105 WEST CAPITOL
JEFFERSON CITY, MO 65102
1-888-ASK-MODOT (1-888-275-6636)

Bartlett & West
601 MONROE STREET, SUITE 201 - JEFFERSON CITY, MO 65101
PHONE 573-634-3181 - FAX 573-634-7904
CERTIFICATE OF AUTHORITY NO. 000167 - ENGINEERING
WWW.BARTWEST.COM

Detailed Jan. 2026
Checked July 2026

Note: This drawing is not to scale. Follow dimensions.

Theoretical Bottom of Slab Elevations at ℄ of Girder (Prior to Forming for Slab)(Estimated at 90 days)*											
	Span (1-2) (78'-0" ℄ Brg. - ℄ Brg.)										
	℄ Brg.	0.1	0.2	0.3	0.4	0.5	0.6	0.7	0.8	0.9	℄ Brg.
Girder No. 1	447.77	447.96	448.15	448.34	448.51	448.67	448.81	448.94	449.07	449.20	449.33
Girder No. 2	447.44	447.64	447.84	448.02	448.20	448.36	448.50	448.63	448.75	448.87	448.99
Girder No. 3	447.12	447.32	447.51	447.69	447.86	448.02	448.16	448.30	448.42	448.53	448.65

* Elevations are based on a constant slab thickness of 8 1/2 inches and include allowance for theoretical dead load deflections due to weight of slab and barrier.

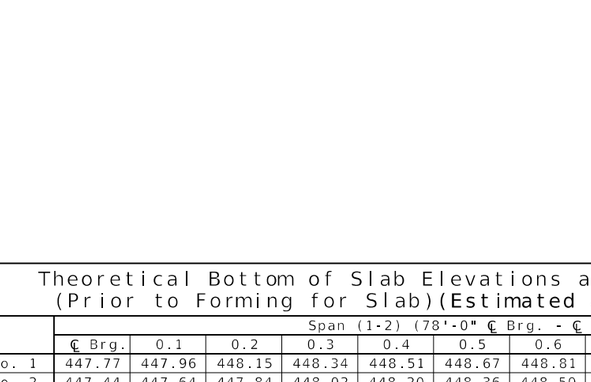

THEORETICAL SLAB HAUNCHING DIAGRAM (ESTIMATED AT 90 DAYS)

If girder camber is different from that shown in the camber diagram, in order to maintain minimum slab thickness, an adjustment of the slab haunches, an increase in slab thickness or a raise in grade uniformly throughout the structure shall be necessary. The haunch shall be limited to ensure the projecting girder reinforcement is embedded into slab at least 2 inches. No payment will be made for additional labor or materials required for variations in haunching, slab thickness or grade adjustment.

Concrete in the slab haunches is included in the Estimated Quantities for Slab on Concrete NU-Girder.

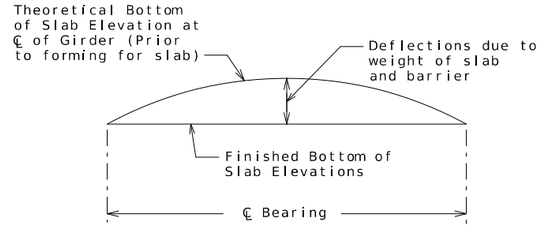

TYPICAL SLAB ELEVATIONS DIAGRAM

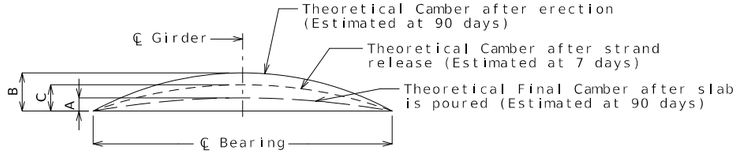

Girder	Span (1-2)		
	A	B	C
Exterior	2 1/4"	3 3/4"	2 5/8"
Interior	2 1/8"		

GIRDER CAMBER DIAGRAM

Conversion Factors for Girder Camber (Estimated at 90 days):

0.1 pt. = 0.314 x 0.5 pt.
0.2 pt. = 0.593 x 0.5 pt.
0.3 pt. = 0.813 x 0.5 pt.
0.4 pt. = 0.952 x 0.5 pt.

CAMBER, SLAB HAUNCHING AND SLAB ELEVATIONS DIAGRAMS

Detailed Jan. 2026
Checked July 2026

Note: This drawing is not to scale. Follow dimensions.

STATE OF MISSOURI
CHRISTOPHER J. CRISWELL
NUMBER PE-026605
PROFESSIONAL ENGINEER
THIS SHEET HAS BEEN SIGNED, SEALED AND DATED ELECTRONICALLY.

IF A SEAL IS PRESENT ON THIS SHEET IT HAS BEEN ELECTRONICALLY SEALED AND DATED.

DATE PREPARED: 9/2/2026
ROUTE: D | STATE: MO
DISTRICT: BR | SHEET NO.: 13
COUNTY: CAPE GIRARDEAU
JOB NO.: J9S3773
CONTRACT ID.:
PROJECT NO.:
BRIDGE NO.: A9778

DESCRIPTION	DATE

MISSOURI HIGHWAYS AND TRANSPORTATION COMMISSION
105 WEST CAPITOL
JEFFERSON CITY, MO 65102
1-888-ASK-MODOT (1-888-275-6636)

Bartlett & West
601 MONROE STREET, SUITE 201 - JEFFERSON CITY, MO 65101
PHONE 573-634-3181 - FAX 573-634-7904
CERTIFICATE OF AUTHORITY NO. 000167 - ENGINEERING
WWW.BARTWEST.COM

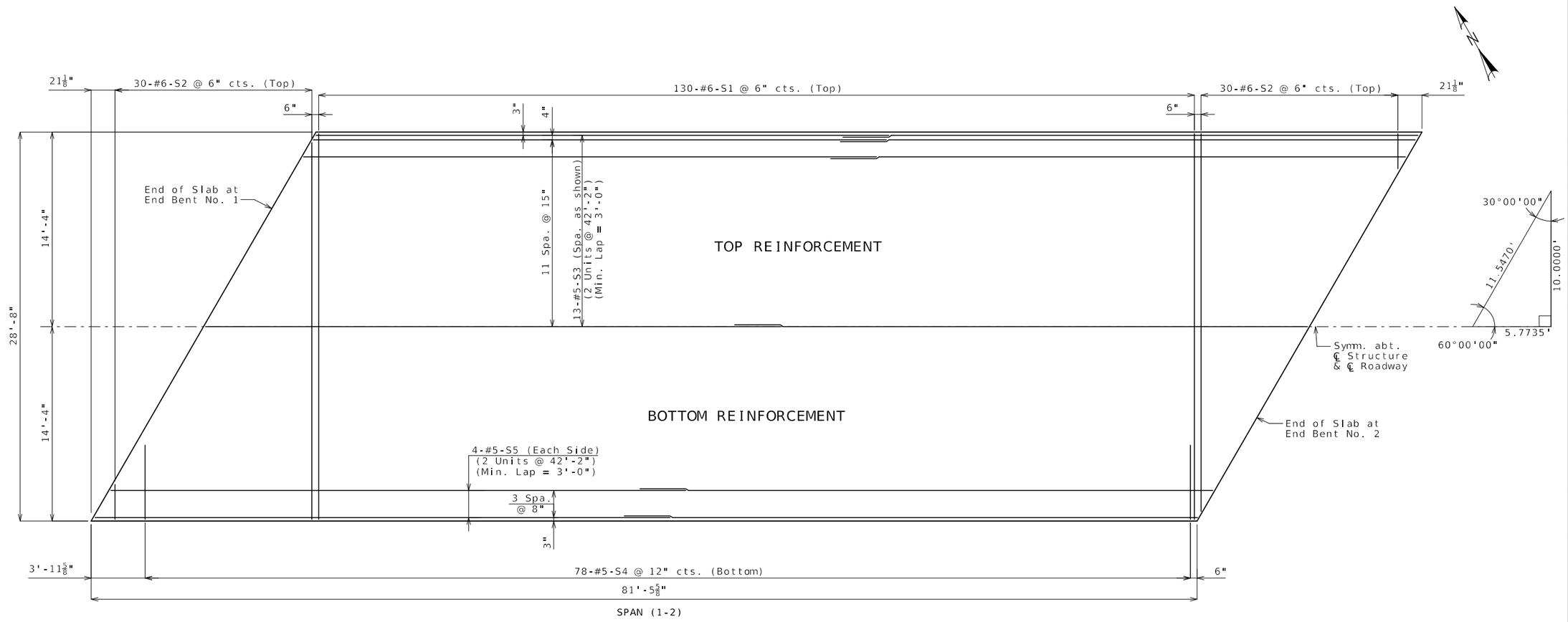

PLAN OF SLAB SHOWING REINFORCEMENT

Notes:

Slab dimensions are measured horizontally.

The concrete diaphragms at the integral end bents shall be poured a minimum of 30 minutes and a maximum of 2 hours before the slab is poured.

The contractor shall furnish an approved retarder to retard the set of the concrete to 2.5 hours, pour up grade and satisfactorily finish the slab at a rate of not less than 25 cubic yards per hour.

For Section Thru Slab, see Sheet No. 15.

For Theoretical Bottom of Slab Elevations, Theoretical Slab Haunching Diagram and Girder Camber Diagram, see Sheet No. 13.

For details and reinforcement of Type D Barrier not shown, see Sheets No. 16 and 17.

SLAB DETAILS

Detailed Jan. 2026
Checked July 2026

Note: This drawing is not to scale. Follow dimensions.

STATE OF MISSOURI
CHRISTOPHER J. CRISWELL
NUMBER PE-028605
PROFESSIONAL ENGINEER
THIS SHEET HAS BEEN SIGNED, SEALED AND DATED ELECTRONICALLY.

DATE PREPARED 9/2/2026

ROUTE	STATE
D	MO
DISTRICT	SHEET NO.
BR	14

COUNTY: CAPE GIRARDEAU
JOB NO.: J9S3773
CONTRACT ID.:
PROJECT NO.:
BRIDGE NO.: A9778

DESCRIPTION	DATE

MISSOURI HIGHWAYS AND TRANSPORTATION COMMISSION
105 WEST CAPITOL
JEFFERSON CITY, MO 65102
1-888-ASK-MODOT (1-888-275-6636)

Bartlett & West
601 MONROE STREET, SUITE 201 - JEFFERSON CITY, MO 65101
PHONE 573-634-3181 - FAX 573-634-7904
CERTIFICATE OF AUTHORITY NO. 000167 - ENGINEERING
WWW.BARTWEST.COM

IF A SEAL IS PRESENT ON THIS SHEET IT HAS BEEN ELECTRONICALLY SEALED AND DATED.

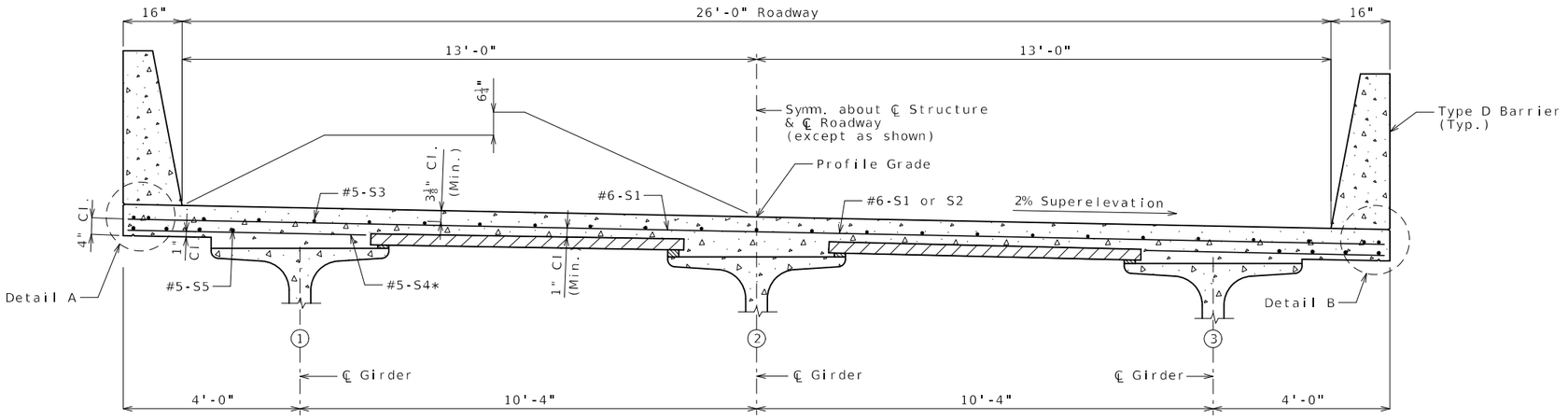

HALF SECTION NEAR MIDSPAN HALF SECTION NEAR END BENT

SECTION THRU SLAB

* Alternate bar shape available, see barrier sheet.

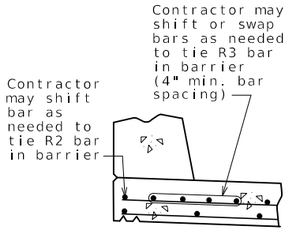

OPTIONAL SHIFTING TOP BARS AT BARRIER

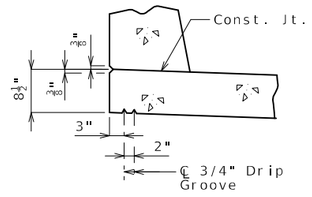

DETAIL A

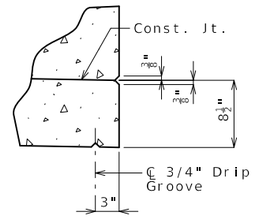

DETAIL B

Notes:

For details of precast prestressed panels, see Sheet No. 12.

For reinforcement of barrier not shown, see Sheet No. 16.

For Theoretical Bottom of Slab Elevations, Girder Camber Diagram and Theoretical Slab Haunching Diagram, see Sheet No. 13.

For Plan of Slab Showing Reinforcement, see Sheet No. 14.

SLAB DETAILS

Detailed Jan. 2026
Checked July 2026

Note: This drawing is not to scale. Follow dimensions.

pw://bartwest-pw.bentley.com:bartwest-pw-04/Documents/19000/19421.M00 - MoDOT Cape Girardeau County Bridge Replacements/OpenRoads Designer/Cape D Plan sheets/A9778/B_A9778_015_J9S3773_SLAB02_26ft_symm_1 (1).dgn

STATE OF MISSOURI
CHRISTOPHER J. CRISWELL
NUMBER PE-026605
PROFESSIONAL ENGINEER
THIS SHEET HAS BEEN SIGNED SEALED AND DATED ELECTRONICALLY.

DATE PREPARED 9/2/2026
ROUTE D | STATE MO
DISTRICT BR | SHEET NO. 15
COUNTY CAPE GIRARDEAU
JOB NO. J9S3773
CONTRACT ID.
PROJECT NO.
BRIDGE NO. A9778

DESCRIPTION | DATE

MISSOURI HIGHWAYS AND TRANSPORTATION COMMISSION
105 WEST CAPITOL
JEFFERSON CITY, MO 65102
1-888-ASK-MODOT (1-888-275-6636)

Bartlett & West
601 MONROE STREET, SUITE 201 - JEFFERSON CITY, MO 65101
PHONE 573-634-3181 - FAX 573-634-7904
CERTIFICATE OF AUTHORITY NO. 000167 - ENGINEERING
WWW.BARTWEST.COM

IF A SEAL IS PRESENT ON THIS SHEET IT HAS BEEN ELECTRONICALLY SEALED AND DATED.

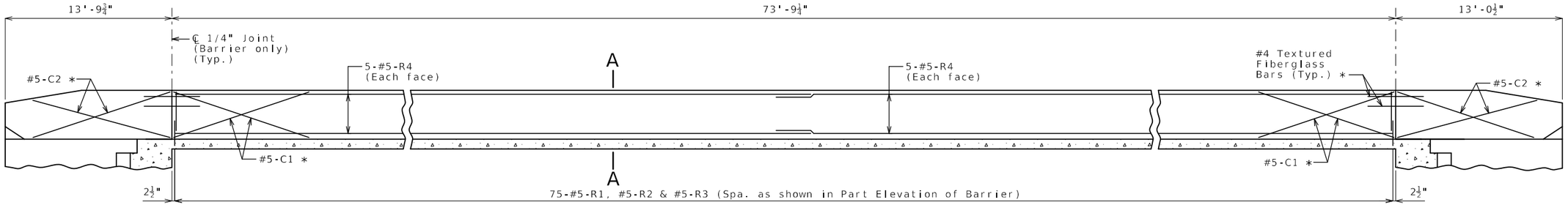

ELEVATION OF BARRIER

Longitudinal dimensions are horizontal.
(Left barrier shown, right barrier similar)

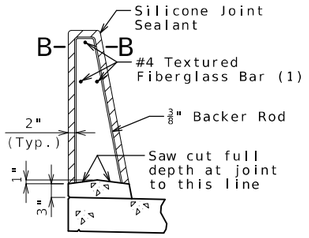

SECTION THRU SAW CUT JOINT

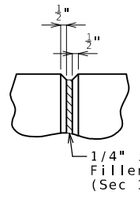

PART ELEVATION AT FORMED JOINT

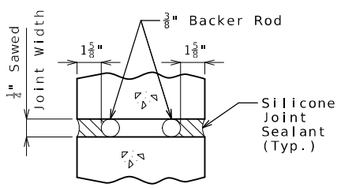

SECTION B-B

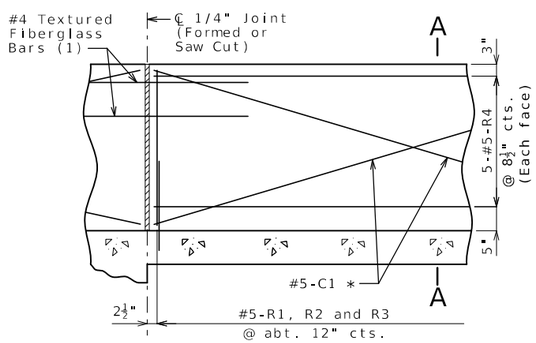

PART ELEVATION OF BARRIER

(1) Four feet long, centered on joint, slip-formed option only

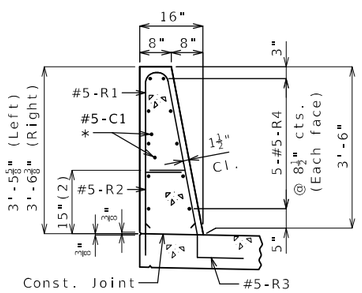

SECTION A-A

Use a minimum lap of 2'-6" for #5 horizontal barrier bars.

The cross-sectional area above the slab = 3.48 square feet (left)
= 3.52 square feet (right)

(2) To top of bar

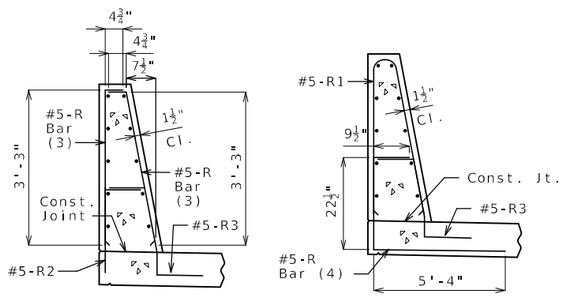

R-BAR PERMISSIBLE ALTERNATE SHAPE

(3) The R1 bar may be separated into two bars as shown, at the contractor's option, only when slip forming is not used. (All dimensions are out to out.)

(4) The R2 bar and #5 bottom transverse slab bar in cantilever (prestressed panels only) combination may be furnished as one bar as shown, at the contractor's option.

General Notes:

* Slip-formed option only.

Conventional forming or slip forming may be used. Saw cut joints may be used with conventional forming.

Top of barrier shall be built parallel to grade and barrier joints (except at end bents) normal to grade.

All exposed edges of barrier shall have either a 1/2-inch radius or a 3/8-inch bevel, unless otherwise noted.

Payment for all concrete and reinforcement, complete in place, will be considered completely covered by the contract unit price for Type D Barrier per linear foot.

Concrete in barrier shall be Class B-1.

Measurement of barrier is to the nearest linear foot for each structure, measured along the outside top of slab from end of wing to end of wing.

Concrete traffic barrier delineators shall be placed on top of the barrier as shown on Missouri Standard Plan 617.10 and in accordance with Sec 617. Delineators on bridges with two-lane, two-way traffic shall have retroreflective sheeting on both sides. Concrete traffic barrier delineators will be considered completely covered by the contract unit price for Type D Barrier.

Joint sealant and backer rods shall be in accordance with Sec 717 for silicone joint sealant for saw cut and formed joints.

For slip-formed option, both sides of barrier shall have a vertically broomed finish and the top shall have a transversely broomed finish.

TYPE D BARRIER

Detailed Jan. 2026
Checked July 2026

Note: This drawing is not to scale. Follow dimensions.

STATE OF MISSOURI
CHRISTOPHER J. CRISWELL
NUMBER PE-2008605
PROFESSIONAL ENGINEER
THIS SHEET HAS BEEN SIGNED, SEALED AND DATED ELECTRONICALLY.

DATE PREPARED 9/2/2026
ROUTE D | STATE MO
DISTRICT BR | SHEET NO. 16
COUNTY CAPE GIRARDEAU
JOB NO. J9S3773
CONTRACT ID.
PROJECT NO.
BRIDGE NO. A9778

DESCRIPTION
DATE

MISSOURI HIGHWAYS AND TRANSPORTATION COMMISSION
105 WEST CAPITOL
JEFFERSON CITY, MO 65102
1-888-ASK-MODOT (1-888-275-6636)
Bartlett & West
601 MONROE STREET, SUITE 201 - JEFFERSON CITY, MO 65101
PHONE 573-634-3181 - FAX 573-634-7904
CERTIFICATE OF AUTHORITY NO. 000167 - ENGINEERING
WWW.BARTWEST.COM

IF A SEAL IS PRESENT ON THIS SHEET IT HAS BEEN ELECTRONICALLY SEALED AND DATED.

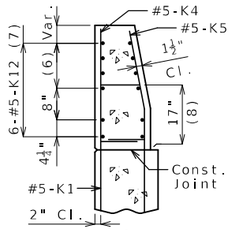

SECTION A-A

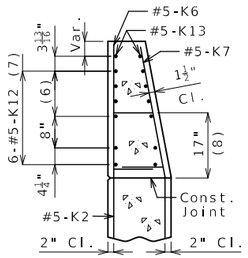

SECTION B-B

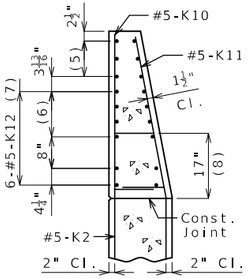

SECTION C-C

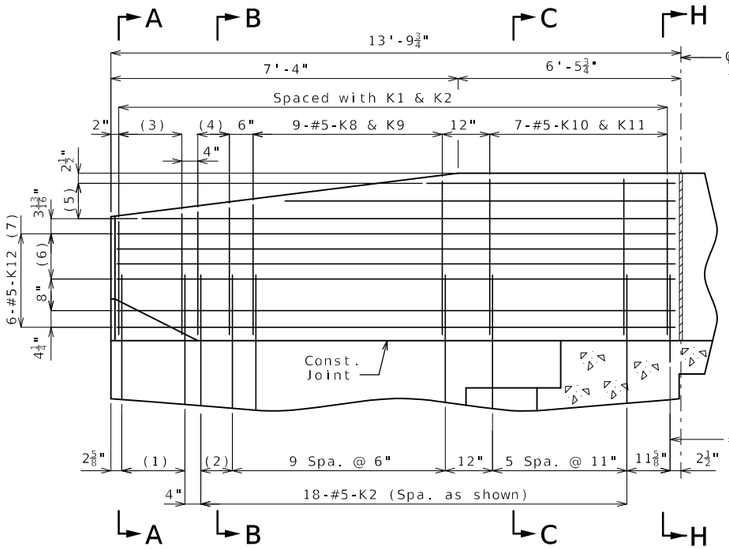

PART ELEVATION

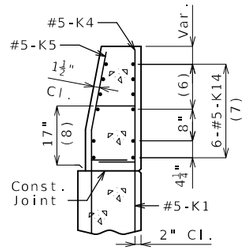

SECTION D-D

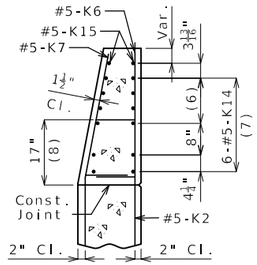

SECTION E-E

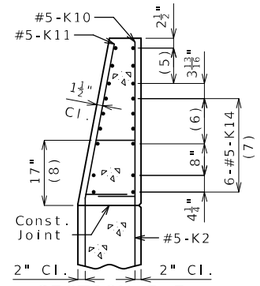

SECTION F-F

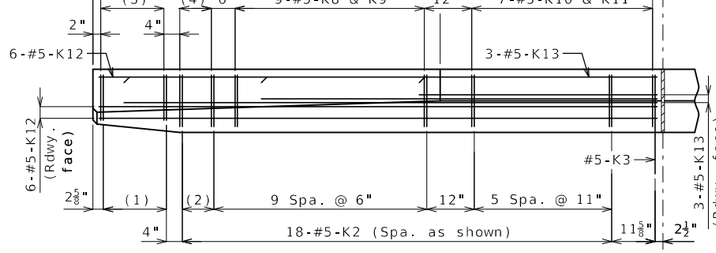

PART PLAN

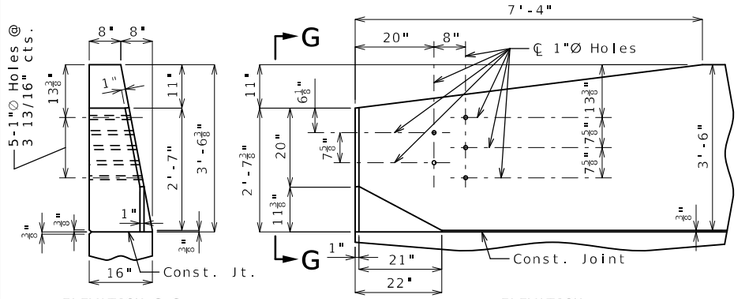

ELEVATION G-G ELEVATION

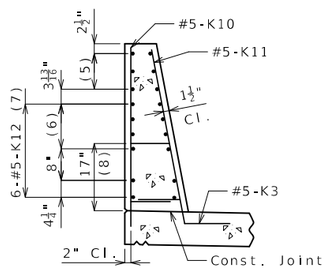

SECTION H-H

(1) 5-#5-K1 @ 4" cts.

(2) 2 spaces @ 4"

(3) 5-#5-K4 & K5

(4) 3-#5-K6 & K7

(5) 3-#5-K13 or K15 @ 4½" cts., each face

(6) 3 spaces @ 3 13/16"

(7) Spaced as shown, each face

(8) To top of bar

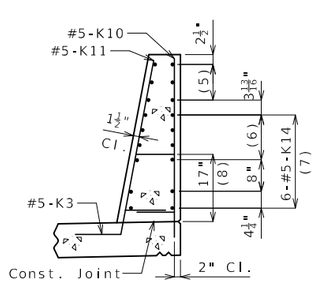

SECTION I-I

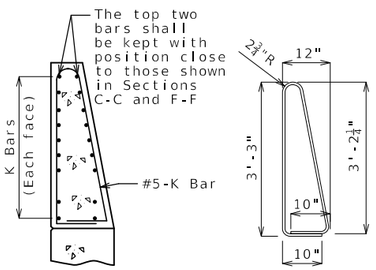

K10-K11 BAR PERMISSIBLE ALTERNATE SHAPE

(Other K bars not shown for clarity)

The K10-K11 bar combination may be furnished as one bar as shown, at the contractor's option.

All dimensions are out to out.

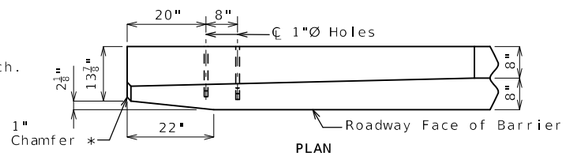

DETAILS OF GUARD RAIL ATTACHMENT

* Transition to zero at Type A curb for gutter lines to match.

General Notes:

Concrete traffic barrier delineators shall be placed on top of the barrier as shown on Missouri Standard Plan 617.10 and in accordance with Sec 617. Delineators on bridges with two-lane, two-way traffic shall have retroreflective sheeting on both sides. Concrete traffic barrier delineators will be considered completely covered by the contract unit price for Type D Barrier.

Reinforcing Steel:
Minimum clearance to reinforcing steel shall be 1 1/2" except as shown for bars embedded into end bent.

TYPE D BARRIER AT END BENTS

(Left barrier shown, right barrier similar)

Detailed Jan. 2026
Checked July 2026

Note: This drawing is not to scale. Follow dimensions.

STATE OF MISSOURI
CHRISTOPHER J. CRISWELL
NUMBER PE-028605
PROFESSIONAL ENGINEER
THIS SHEET HAS BEEN SIGNED, SEALED AND DATED ELECTRONICALLY.

DATE PREPARED 9/2/2026
ROUTE D | STATE MO
DISTRICT BR | SHEET NO. 17
COUNTY CAPE GIRARDEAU
JOB NO. J9S3773
CONTRACT ID.
PROJECT NO.
BRIDGE NO. A9778

DESCRIPTION | DATE

IF A SEAL IS PRESENT ON THIS SHEET IT HAS BEEN ELECTRONICALLY SEALED AND DATED.

MISSOURI HIGHWAYS AND TRANSPORTATION COMMISSION
MoDOT
105 WEST CAPITOL
JEFFERSON CITY, MO 65102
1-888-ASK-MODOT (1-888-275-6636)

Bartlett & West
601 MONROE STREET, SUITE 201 - JEFFERSON CITY, MO 65101
PHONE 573-634-3181 - FAX 573-634-7904
CERTIFICATE OF AUTHORITY NO. 000167 - ENGINEERING
WWW.BARTWEST.COM

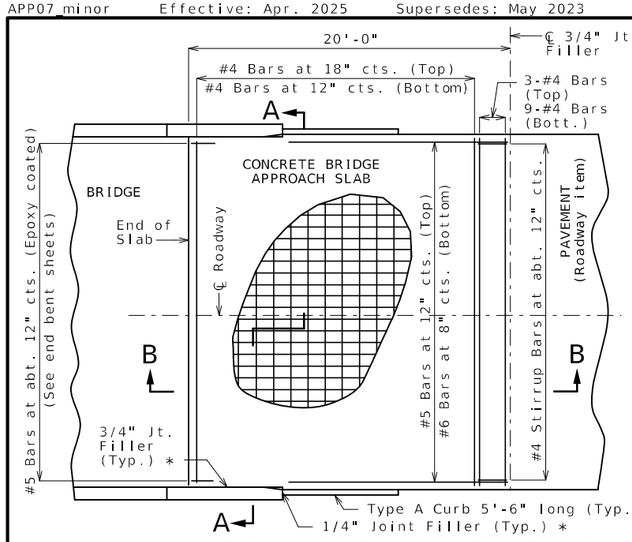

PART PLAN OF SQUARED STRUCTURE

(Skewed structure similar)

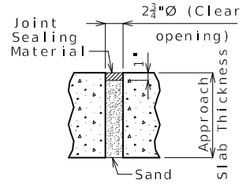

UNDERSEAL ACCESS HOLE DETAIL

(If required)

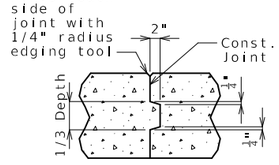

CONSTRUCTION JOINT DETAIL

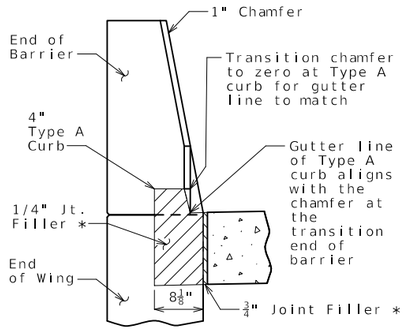

SECTION BETWEEN CURB AND BARRIER

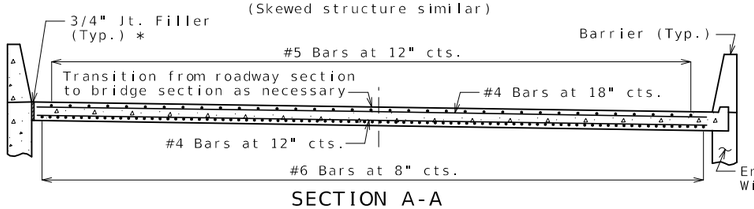

SECTION A-A

Unless otherwise approved by the engineer, the contractor shall superelevate the bottom of the approach slab to match the superelevation of the roadway surface.

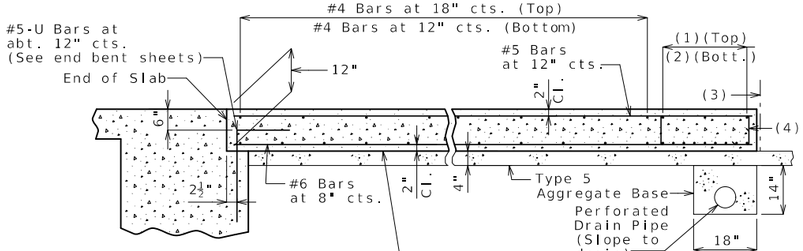

SECTION B-B

(1) 3-#4 Bars

(2) 9-#4 Bars

(3) ℄ 3/4" Jt. Filler

(4) #4 Stirrup Bars at abt. 12" cts.; 2'-0"x 8" (Min.) out to out; Actual length = 5'-10" (Min.); 90° stirrup hook at bottom; Stirrup height (8") and actual length vary due to superelevation.

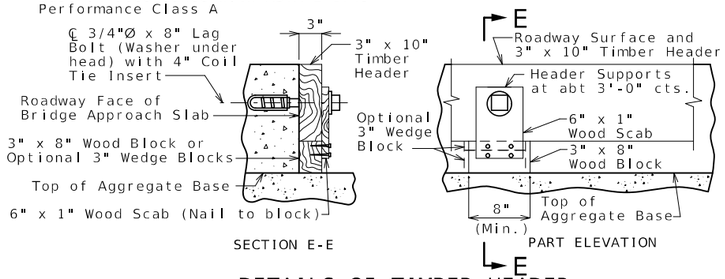

SECTION E-E

PART ELEVATION

DETAILS OF TIMBER HEADER

Remove timber header when concrete pavement is placed.

OPTIONAL CONCRETE SLAB

Notes For Concrete Slab Only:

All concrete for the bridge approach slab shall be in accordance with Sec 503 (f'c = 4,000 psi).

The reinforcing steel in the bridge approach slab shall be epoxy coated Grade 60 with fy = 60,000 psi.

Longitudinal construction joints in bridge approach slab shall be aligned with longitudinal construction joints in bridge slab.

Minimum clearance to reinforcing steel shall be 1 1/2", unless otherwise shown.

The reinforcing steel in the bridge approach slab shall be continuous. The transverse reinforcing steel may be made continuous by providing a minimum lap splice of 26 inches for #4 bars, or by mechanical bar splice.

Mechanical bar splices shall be in accordance with Sec 710.

All joint filler shall be in accordance with Sec 1057 for preformed fiber expansion joint filler except as noted.

Payment for furnishing all materials, labor and excavation necessary to construct the concrete bridge approach slab, including the timber header, underdrain, Type 5 aggregate base, joint filler, and all other appurtenances and incidental work as shown on this sheet, complete in place, will be considered completely covered by the contract unit price for Bridge Approach Slab (Minor) per square yard.

See Missouri Standard Plan 609.00 for details of Type A curb.

Drain pipe may be either 6" diameter corrugated metallic-coated pipe underdrain, 4" diameter corrugated polyvinyl chloride (PVC) drain pipe, or 4" diameter corrugated polyethylene (PE) drain pipe.

* Seal joint between vertical face of approach slab and wing with sealant in accordance with Sec 717 for silicone joint sealant for saw cut and formed joints.

General Notes:

Contractor shall have the option to construct either slab except as noted.

The contractor shall pour and satisfactorily finish the bridge slab before placing the bridge approach slab.

See roadway plans for details of porous backfill at each bridge end.

MoDOT Construction personnel will indicate the bridge approach slab used for this structure:

☐ Concrete Bridge Approach Slab

☐ Asphalt Bridge Approach Slab

Notes For Asphalt Slab Only:

Payment for furnishing all materials, labor and excavation necessary to construct the asphalt bridge approach slab, including tack, curb, and Type 5 aggregate base within the pay limits shown, complete in place, will be considered completely covered by the contract unit price for Bridge Approach Slab (Minor) per square yard.

Application of tack is required between lifts per Sec 403.

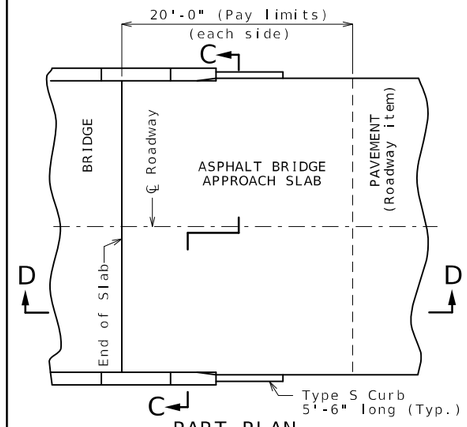

PART PLAN

(Squared structure shown, skewed structure similar)

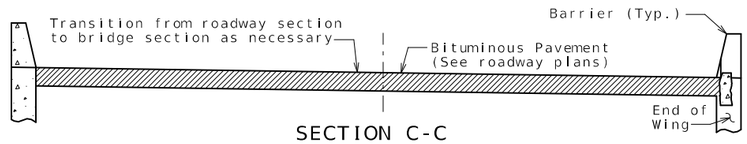

SECTION C-C

Unless otherwise approved by the engineer, the contractor shall superelevate the bottom of the approach slab to match the superelevation of the roadway surface.

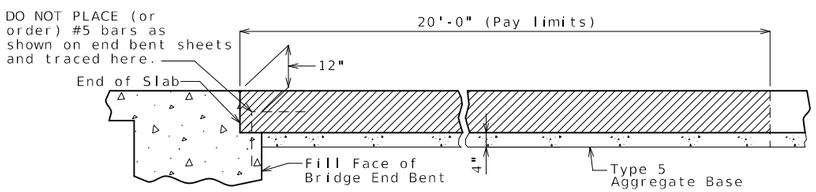

SECTION D-D

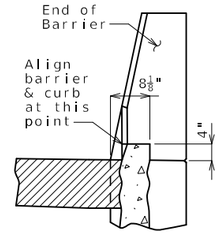

4" TYPE S CURB

See Missouri Standard Plan 609.00 for details of Type S curb.

OPTIONAL ASPHALT SLAB (NOT ALLOWED WITH CONCRETE PAVEMENT)

BRIDGE APPROACH SLAB (MINOR)

Detailed Jan. 2026
Checked July 2026

Note: This drawing is not to scale. Follow dimensions.

pw://bartwest-pw.bentley.com:bartwest-pw-04/Documents/19000/19421.M00 - MoDOT Cape Girardeau County Bridge Replacements/OpenRoads Designer/Cape D Plan sheets/A9778/B_A9778_018_J9S3773_APP07_minor_5.dgn 3:59:30 AM 9/2/2026

STATE OF MISSOURI
CHRISTOPHER J. CRISWELL
NUMBER PE-2008005
PROFESSIONAL ENGINEER
THIS SHEET HAS BEEN SIGNED, SEALED AND DATED ELECTRONICALLY.

DATE PREPARED 9/2/2026

ROUTE D | STATE MO

DISTRICT BR | SHEET NO. 18

COUNTY CAPE GIRARDEAU

JOB NO. J9S3773

CONTRACT ID.

PROJECT NO.

BRIDGE NO. A9778

DESCRIPTION	DATE

IF A SEAL IS PRESENT ON THIS SHEET IT HAS BEEN ELECTRONICALLY SEALED AND DATED.

MISSOURI HIGHWAYS AND TRANSPORTATION COMMISSION

105 WEST CAPITOL
JEFFERSON CITY, MO 65102
1-888-ASK-MODOT (1-888-275-6636)

Bartlett & West
601 MONROE STREET, SUITE 201 - JEFFERSON CITY, MO 65101
PHONE 573-634-3181 - FAX 573-634-7904
CERTIFICATE OF AUTHORITY NO. 000167 - ENGINEERING
WWW.BARTWEST.COM

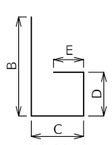

SHAPE 6
or 6S

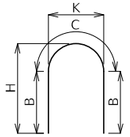

SHAPE 7

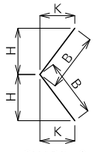

SHAPE 8
or 8S

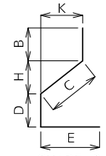

SHAPE 9
or 9S

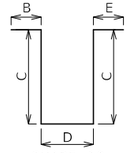

SHAPE 10
or 10S

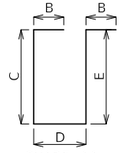

SHAPE 11
or 11S

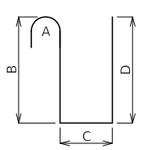

SHAPE 12

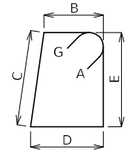

SHAPE 13S

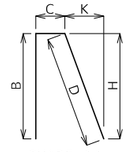

SHAPE 14
or 14S

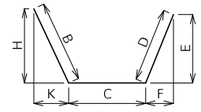

SHAPE 15
or 15S

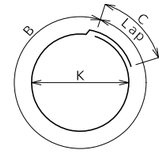

SHAPE 16

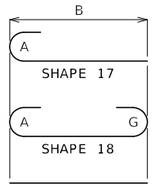

SHAPE 17
SHAPE 18
SHAPE 20

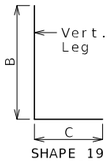

SHAPE 19
or 19S

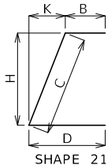

SHAPE 21
or 21S

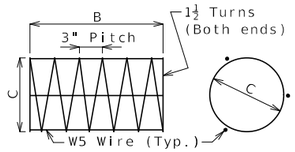

SHAPE 22

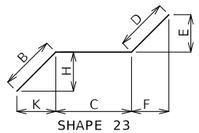

SHAPE 23
or 23S

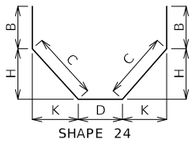

SHAPE 24
or 24S

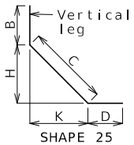

SHAPE 25
or 25S

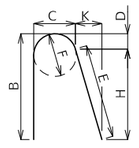

SHAPE 26

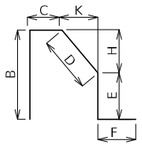

SHAPE 27S

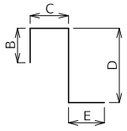

SHAPE 28
or 28S

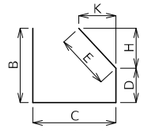

SHAPE 29
or 29S

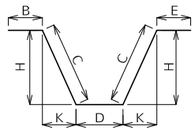

SHAPE 30
or 30S

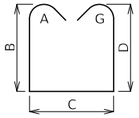

SHAPE 31S

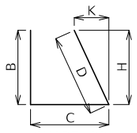

SHAPE 32
or 32S

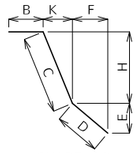

SHAPE 33
or 33S

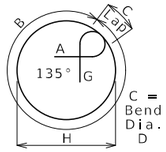

SHAPE 34S

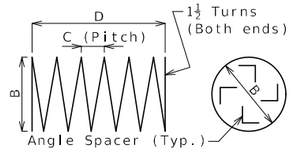

SHAPE 35 (1)

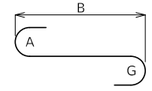

SHAPE 36

Finished Bend Diameters D and Hook Dimensions

Standard Pin Bend Shapes

Size	Case	D	A or G		J
			90°	180°	180°
#4	1	3"	8"	6"	4"
#5	1	3¾"	10"	7"	5"
#6	1	4½"	12"	8¼"	6"
#7	2	5¼"	14"	9⅜"	7"
	3	7"	15"	11½"	8¾"
#8	2	6"	16"	11"	8"
	3	8"	17"	13¾"	10"
#9	1	9½"	19½"	15½"	11¾"
#10	1	10¾"	22"	17½"	13¼"
#11	1	12"	24½"	19½"	14⅞"
#14	1	18¾"	31¼"	27½"	21⅝"
#18	1	24"	41½"	36¼"	28½"

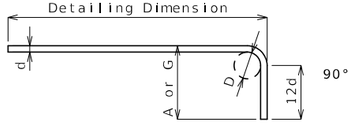

Stirrup Pin Bend Shapes (S)

Size	Case	D	A or G			H	J
			90°	135°	180°	135°	180°
#4	2	2"	4½"	4½"	5"	2⅞"	3"
	3	3"	5"	5¼"	6"	3"	4"
#5	2	2½"	5⅜"	5⅜"	5⅜"	3⅝"	3¾"
	3	3¾"	6¼"	6½"	7"	3⅞"	5"
#6	1	4½"	12"	7¾"	8¼"	4⅜"	6"

Applicable for all grades of steel.

Case 1 applies to all reinforcement. Case 2 applies to all reinforcement except for galvanized bars. Case 3 applies to galvanized bars only.

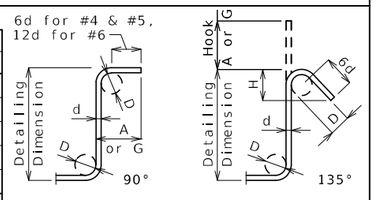

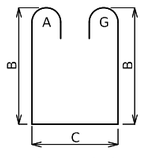

SHAPE 37S

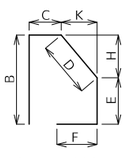

SHAPE 38S

BENDING DIAGRAMS

All dimensions are out to out.

Shapes ending with an S shall be bent in accordance with stirrup pin bend shapes.

Unless otherwise noted, finished bending diameter D is the same for all bends of a shape.

(1) Shall be a deformed or plain spiral bar or wire.

Four angle or channel spacers are required for each column spiral. Spacers are to be placed on inside of spirals. Length and weight of column spirals do not include splices or spacers.

Reinforcing Steel Totals (Pounds)

		Substructure		Superstructure				Entire Bridge	
				Slab			Slip		
	Size	Plain	Coated	Plain	Coated	Barrier	Form	Plain	Coated
By Size	W5	0	0	0	0	0	0	0	0
	4	0	0	0	432	0	0	0	432
	5	0	0	0	4,829	5,862	188	0	10,879
	6	0	0	0	12,631	0	0	0	12,631
	7	0	0	0	0	0	0	0	0
	8	0	0	0	3,126	0	0	0	3,126
	9	0	0	0	0	0	0	0	0
	10	0	0	0	0	0	0	0	0
	11	0	0	0	0	0	0	0	0
	14	0	0	0	0	0	0	0	0
	18	0	0	0	0	0	0	0	0
By Type		0	0	0	21,018	5,862	188	0	27,068

All superstructure reinforcing steel shall be Epoxy Coated unless otherwise specified.

BENDING DIAGRAMS AND REINFORCING STEEL TOTALS

Detailed Jan. 2026
Checked July 2026

Note: This drawing is not to scale. Follow dimensions.

STATE OF MISSOURI
CHRISTOPHER J. CRISWELL
NUMBER PE-026605
PROFESSIONAL ENGINEER
THIS SHEET HAS BEEN SIGNED, SEALED AND DATED ELECTRONICALLY.

IF A SEAL IS PRESENT ON THIS SHEET IT HAS BEEN ELECTRONICALLY SEALED AND DATED.

DATE PREPARED 9/2/2026
ROUTE D | STATE MO
DISTRICT BR | SHEET NO. 19
COUNTY CAPE GIRARDEAU
JOB NO. J9S3773
CONTRACT ID.
PROJECT NO.
BRIDGE NO. A9778

DESCRIPTION | DATE

MISSOURI HIGHWAYS AND TRANSPORTATION COMMISSION
105 WEST CAPITOL
JEFFERSON CITY, MO 65102
1-888-ASK-MODOT (1-888-275-6636)

Bartlett & West
601 MONROE STREET, SUITE 201 - JEFFERSON CITY, MO 65101
PHONE 573-634-3161 - FAX 573-634-7904
CERTIFICATE OF AUTHORITY NO. 000167 - ENGINEERING
WWW.BARTWEST.COM

Bill of Reinforcing Steel

No. Req.	Size/ Mark	Location	Codes C	SH	V	Dimensions B ft in.	C ft in.	D ft in.	E ft in.	F ft in.	H ft in.	K ft in.	Nom. Length ft in.	Actual Length ft in.	Weight lb
		SUPERSTRUCTURE													
		END BENT 1													
9	6 F100	WING BRACE	E	23S		20.00	6 9.50	20.00	10.00	17.25	10.00	17.25	10 2	10 1	136
3	6 F101	DIAPHRAGM	E	21S			7 0.25	3 7.50			6 1.00	3 6.00	10 8	10 7	48
10	6 F102	WING BRACE	E	23S		20.00	4 0.25	20.00	17.25	10.00	17.25	10.00	7 4	7 3	109
3	6 F103	DIAPHRAGM	E	15S		5 3.00	3 7.00				4 6.50	2 7.50	8 10	8 7	39
12	8 H100	BEAM/DIAPHRAGM	E	20		32 9.00							32 9	32 9	1,049
8	6 H101	BEAM/DIAPHRAGM	E	20		32 9.00							32 9	32 9	394
2	6 H102	DIAPHRAGM	E	20		2 5.00							2 5	2 5	7
6	6 H103	DIAPHRAGM	E	20		4 0.00							4 0	4 0	36
6	6 H104	DIAPHRAGM	E	20		11 0.00							11 0	11 0	99
2	6 H105	DIAPHRAGM	E	20		7 11.00							7 11	7 11	24
3	5 H106	STRAND TIE	E	23		15.00	3 2.25	15.00	7.50	13.00	7.50	13.00	5 8	5 8	18
9	6 H107	WING	E	20		10 1.00							10 1	10 1	136
9	6 H108	WING	E	19		10 1.00	12.00						11 1	10 11	148
10	6 H109	WING	E	20		10 1.00							10 1	10 1	151
10	6 H110	WING	E	19		10 1.00	12.00						11 1	10 11	164
4	8 H111	WING	E	20		11 6.00							11 6	11 6	123
4	8 H112	WING	E	19		11 6.00	16.00						12 10	12 7	134
4	8 H113	WING	E	20		11 6.00							11 6	11 6	123
4	8 H114	WING	E	19		11 6.00	16.00						12 10	12 7	134
4	6 H115	BEAM	E	20	1	19 10.00							19 10	19 10	
		Incr. = 6.000"				18 4.00							18 4	18 4	115
4	6 H116	WING	E	20	1	8 0.00							8 0	8 0	
		Incr. = 6.000"				6 6.00							6 6	6 6	44
15	5 U100	BEAM	E	10S			5 7.50	3 8.00					14 11	14 8	229
7	4 U101	BEAM	E	13S		3 8.00	2 8.00	3 8.00	2 8.00				13 5	13 2	62
1	4 U102	BEAM	E	10S			2 8.00	3 8.00					9 0	8 10	6
25	5 U103	DIAPHRAGM	E	10S			3 5.00	3 0.75					9 11	9 8	252
25	6 U104	DIAPHRAGM	E	19S		2 8.00	3 8.00						6 4	6 2	232
26	5 U105	APPROACH NOTCH	E	19S		2 0.00	15.00						3 3	3 2	86
41	6 U106	DIAPHRAGM	E	19S		5 3.00	2 7.50						7 11	7 9	477
8	4 U107	BEAM	E	13S		3 8.00	3 0.00	3 8.00	3 0.00				14 1	13 10	74
7	4 U108	BEAM	E	13S		3 8.00	3 3.50	3 8.00	3 3.50				14 8	14 5	67
1	4 U109	BEAM	E	10S			3 3.50	3 8.00					10 3	10 1	7
20	5 V100	BEAM	E	20		5 8.00							5 8	5 8	118
15	6 V101	BEAM	E	20		2 9.00							2 9	2 9	62
2	6 V102	WING	E	20		6 4.00							6 4	6 4	19
2	6 V103	WING	E	20		7 2.00							7 2	7 2	22
18	6 V104	WING	E	20	2	6 6.00							6 6	6 6	
		Incr. = 0.250"				6 4.00							6 4	6 4	173
18	6 V105	WING	E	20	2	7 4.00							7 4	7 4	
		Incr. = 0.250"				7 2.00							7 2	7 2	196
		END BENT 2													
10	6 F200	WING BRACE	E	23S		20.00	6 9.50	20.00	10.00	17.25	10.00	17.25	10 2	10 1	151
3	6 F201	DIAPHRAGM	E	21S			7 0.25	3 7.50			6 1.00	3 6.00	10 8	10 7	48
9	6 F202	WING BRACE	E	23S		20.00	4 0.25	20.00	17.25	10.00	17.25	10.00	7 4	7 3	98
3	6 F203	DIAPHRAGM	E	15S		5 3.00	3 7.00				4 6.50	2 7.50	8 10	8 7	39
12	8 H200	BEAM/DIAPHRAGM	E	20		32 9.00							32 9	32 9	1,049
8	6 H201	BEAM/DIAPHRAGM	E	20		32 9.00							32 9	32 9	394
2	6 H202	DIAPHRAGM	E	20		2 5.00							2 5	2 5	7
6	6 H203	DIAPHRAGM	E	20		4 0.00							4 0	4 0	36
6	6 H204	DIAPHRAGM	E	20		11 0.00							11 0	11 0	99
2	6 H205	DIAPHRAGM	E	20		7 11.00							7 11	7 11	24
3	5 H206	STRAND TIE	E	23		15.00	3 2.25	15.00	7.50	13.00	7.50	13.00	5 8	5 8	18
11	6 H207	WING	E	20		10 1.00							10 1	10 1	167
11	6 H208	WING	E	19		10 1.00	12.00						11 1	10 11	180
9	6 H209	WING	E	20		10 1.00							10 1	10 1	136
9	6 H210	WING	E	19		10 1.00	12.00						11 1	10 11	148
4	8 H211	WING	E	20		11 6.00							11 6	11 6	123
4	8 H212	WING	E	19		11 6.00	16.00						12 10	12 7	134
4	8 H213	WING	E	20		11 6.00							11 6	11 6	123
4	8 H214	WING	E	19		11 6.00	16.00						12 10	12 7	134
4	6 H215	BEAM	E	20	1	20 6.00							20 6	20 6	
		Incr. = 6.000"				19 0.00							19 0	19 0	119

Bill of Reinforcing Steel

No. Req.	Size/ Mark	Location	Codes C	SH	V	Dimensions B ft in.	C ft in.	D ft in.	E ft in.	F ft in.	H ft in.	K ft in.	Nom. Length ft in.	Actual Length ft in.	Weight lb
4	6 H216	WING	E	20	1	8 6.00							8 6	8 6	
		Incr. = 6.000"				7 0.00							7 0	7 0	47
15	5 U200	BEAM	E	10S			5 7.50	3 8.00					14 11	14 8	229
7	4 U201	BEAM	E	13S		3 8.00	2 8.00	3 8.00	2 8.00				13 5	13 2	62
1	4 U202	BEAM	E	10S			2 8.00	3 8.00					9 0	8 10	6
25	5 U203	DIAPHRAGM	E	10S			3 6.00	3 0.75					10 1	9 10	256
25	6 U204	DIAPHRAGM	E	19S		2 8.00	3 8.00						6 4	6 2	232
26	5 U205	APPROACH NOTCH	E	19S		2 0.00	15.00						3 3	3 2	86
41	6 U206	DIAPHRAGM	E	19S		5 3.00	2 7.50						7 11	7 9	477
8	4 U207	BEAM	E	13S		3 8.00	3 0.00	3 8.00	3 0.00				14 1	13 10	74
7	4 U208	BEAM	E	13S		3 8.00	3 3.75	3 8.00	3 3.75				14 9	14 5	67
1	4 U209	BEAM	E	10S			3 3.75	3 8.00					10 4	10 1	7
20	5 V200	BEAM	E	20		5 8.00							5 8	5 8	118
15	6 V201	BEAM	E	20		2 9.00							2 9	2 9	62
2	6 V202	WING	E	20		7 8.00							7 8	7 8	23
2	6 V203	WING	E	20		6 9.00							6 9	6 9	20
18	6 V204	WING	E	20	2	7 8.00							7 8	7 8	
		Incr. = 0.250"				7 6.00							7 6	7 6	205
18	6 V205	WING	E	20	2	6 9.00							6 9	6 9	
		Incr. = 0.250"				6 7.00							6 7	6 7	180
		SLAB													
130	6 S1	SLAB	E	20		28 5.00							28 5	28 5	5,549
60	6 S2	SLAB	E	20	2	27 9.00							27 9	27 9	
		Incr. = 10.500"				2 4.50							2 5	2 5	1,359
50	5 S3	SLAB	E	20		42 2.00							42 2	42 2	2,199
156	5 S4	SLAB	E	20		5 4.00							5 4	5 4	868
8	5 S5	SLAB	E	20		42 2.00							42 2	42 2	352
		BARRIER													
		TYPE D													
8	5 C1	SLIP FORM	E	20		12 0.00							12 0	12 0	100
8	5 C2	SLIP FORM	E	20		10 6.00							10 6	10 6	88
20	5 K1	BARRIER	E	27S		3 5.00	9.25	5.25	2 11.75		5.25	1.00	7 7	7 5	155
70	5 K2	BARRIER	E	27S		3 5.00	9.25	14.50	2 2.75		14.25	2.75	7 8	7 5	541
4	5 K3	BARRIER	E	27S		22.50	9.25	14.50	7.75	12.00	14.25	2.75	5 6	5 2	22
20	5 K4	BARRIER	E	19S	4	2 4.25	10.00						3 2	3 1	
		Incr. = 0.500"				2 6.25	10.00						3 4	3 3	66
20	5 K5	BARRIER	E	38S	4			18.50	9.50	8.25	18.00	4.00	3 0	2 11	
		Incr. = 0.500"						20.50	9.50	8.25	20.00	4.50	3 2	3 1	63
12	5 K6	BARRIER	E	19S		2 6.75	10.00						3 5	3 3	41
12	5 K7	BARRIER	E	21S			2 6.75	10.00			2 6.00	6.25	3 5	3 4	42
36	5 K8	BARRIER	E	19S	4	2 8.50	10.00						3 7	3 5	
		Incr. = 0.750"				3 2.50	10.00						4 1	3 11	138
36	5 K9	BARRIER	E	21S	4		2 8.50	10.00			2 7.75	6.75	3 7	3 6	
		Incr. = 0.750"					3 2.50	10.00			3 1.75	7.75	4 1	4 0	141
26	5 K10	BARRIER	E	19S		3 3.00	10.00						4 1	4 0	108
26	5 K11	BARRIER	E	21S			3 3.00	10.00			3 2.25	7.75	4 1	4 0	108
24	5 K12	BARRIER	E	20		13 6.00							13 6	13 6	338
12	5 K13	BARRIER	E	20	4	12 9.00							12 9	12 9	
		Incr. = 36.000"				6 9.00							6 9	6 9	122
24	5 K14	BARRIER	E	20		12 9.00							12 9	12 9	319
12	5 K15	BARRIER	E	20	4	12 0.00							12 0	12 0	
		Incr. = 36.000"				6 0.00							6 0	6 0	113
150	5 R1	BARRIER	E	26		3 3.00	5.50	2.25	3 1.25	5.50	3 0.75	6.75	7 0	6 9	1,056
150	5 R2	BARRIER	E	19S		20.50	9.50						2 6	2 5	378
150	5 R3	BARRIER	E	27S			9.50	15.25	5.00	12.00	15.00	3.00	3 6	3 4	522
40	5 R4	BARRIER	E	20		38 1.00							38 1	38 1	1,589

Nominal lengths are based on out to out dimensions shown in bending diagrams and are listed to the nearest inch for fabricator's use. Actual lengths are measured along centerline bar to the nearest inch. Weights are based on actual lengths.

For bending diagrams and steel reinforcing totals, see Sheet No. 19.

Reinforcing steel (ASTM A706 Grade 60) fy = 60,000 psi

Codes: C = Required coatings, where E = Epoxy Coated and G = Galvanized.

SH = Required shape, see bending diagrams.

V = Sets of varied bars and number of bars of each length. Bar dimensions vary in equal increments between dimensions shown on this line and the following line and the actual length dimension shown on this line and the following line vary by the specified increment.

Detailed Jan. 2026
Checked July 2026

BILL OF REINFORCING STEEL

Note: This drawing is not to scale. Follow dimensions.

STATE OF MISSOURI
CHRISTOPHER J. CRISWELL
NUMBER PE-028605
PROFESSIONAL ENGINEER
THIS SHEET HAS BEEN SIGNED, SEALED AND DATED ELECTRONICALLY.

DATE PREPARED 9/2/2026

ROUTE	STATE
D	MO
DISTRICT	SHEET NO.
BR	20

COUNTY: CAPE GIRARDEAU
JOB NO.: J9S3773
CONTRACT ID.:
PROJECT NO.:
BRIDGE NO.: A9778

DESCRIPTION | DATE

IF A SEAL IS PRESENT ON THIS SHEET IT HAS BEEN ELECTRONICALLY SEALED AND DATED.

MISSOURI HIGHWAYS AND TRANSPORTATION COMMISSION
105 WEST CAPITOL
JEFFERSON CITY, MO 65102
1-888-ASK-MODOT (1-888-275-6636)

Bartlett & West
601 MONROE STREET, SUITE 201 - JEFFERSON CITY, MO 65101
PHONE 573-634-3181 - FAX 573-634-7904
CERTIFICATE OF AUTHORITY NO. 000167 - ENGINEERING
WWW.BARTWEST.COM

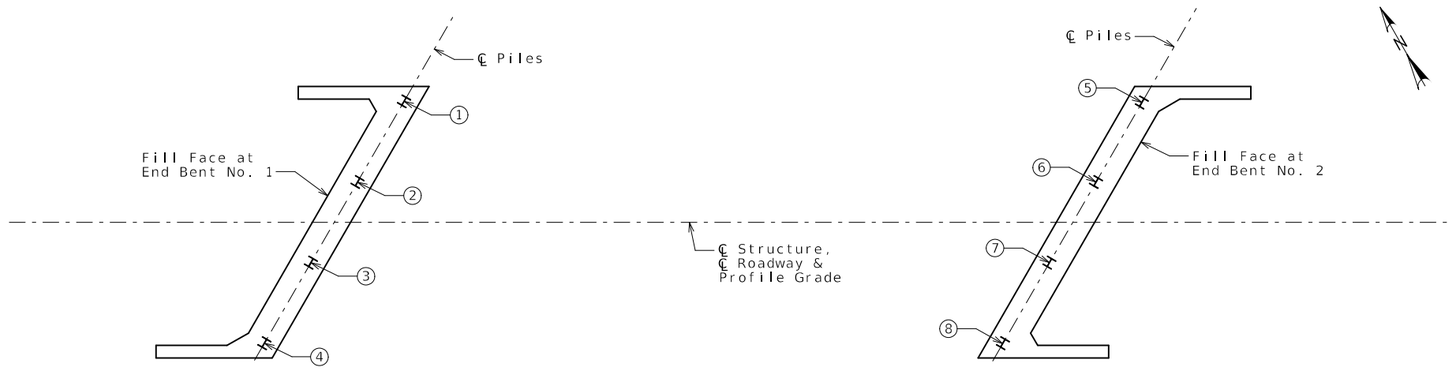

PART PLAN SHOWING PILE NUMBERING FOR RECORDING AS-BUILT PILE DATA

As-Built Pile Data			
Pile No.	Length in Place (ft)	Computed Nominal Axial Compressive Resistance (kips)	Remarks
			End Bent No. 1
1			
2			
3			
4			

As-Built Pile Data			
Pile No.	Length in Place (ft)	Computed Nominal Axial Compressive Resistance (kips)	Remarks
			End Bent No. 2
5			
6			
7			
8			

Note:
Indicate in remarks column:
A. Pile type and grade
B. Batter
C. Driven to practical refusal

This sheet to be completed by MoDOT construction personnel.

STATE OF MISSOURI
CHRISTOPHER J. CRISWELL
NUMBER PE-028605
PROFESSIONAL ENGINEER
THIS SHEET HAS BEEN SIGNED, SEALED AND DATED ELECTRONICALLY.

DATE PREPARED 9/2/2026
ROUTE D | STATE MO
DISTRICT BR | SHEET NO. 21
COUNTY CAPE GIRARDEAU
JOB NO. J9S3773
CONTRACT ID.
PROJECT NO.
BRIDGE NO. A9778

DESCRIPTION | DATE

IF A SEAL IS PRESENT ON THIS SHEET IT HAS BEEN ELECTRONICALLY SEALED AND DATED.

MISSOURI HIGHWAYS AND TRANSPORTATION COMMISSION
105 WEST CAPITOL
JEFFERSON CITY, MO 65102
1-888-ASK-MODOT (1-888-275-6636)

Bartlett & West
601 MONROE STREET, SUITE 201 - JEFFERSON CITY, MO 65101
PHONE 573-634-3181 - FAX 573-634-7904
CERTIFICATE OF AUTHORITY NO. 000167 - ENGINEERING
WWW.BARTWEST.COM

Millennia Professional Services

SUBSURFACE DIAGRAM
Route D over Cane Creek

CLIENT Bartlett and West

PROJECT NUMBER MG25044

PROJECT NAME Route D over Cane Creek

PROJECT LOCATION Cape Girardeau County, Missouri

Asphalt
Limestone
Fill (made ground)
USCS Low Plasticity Clay

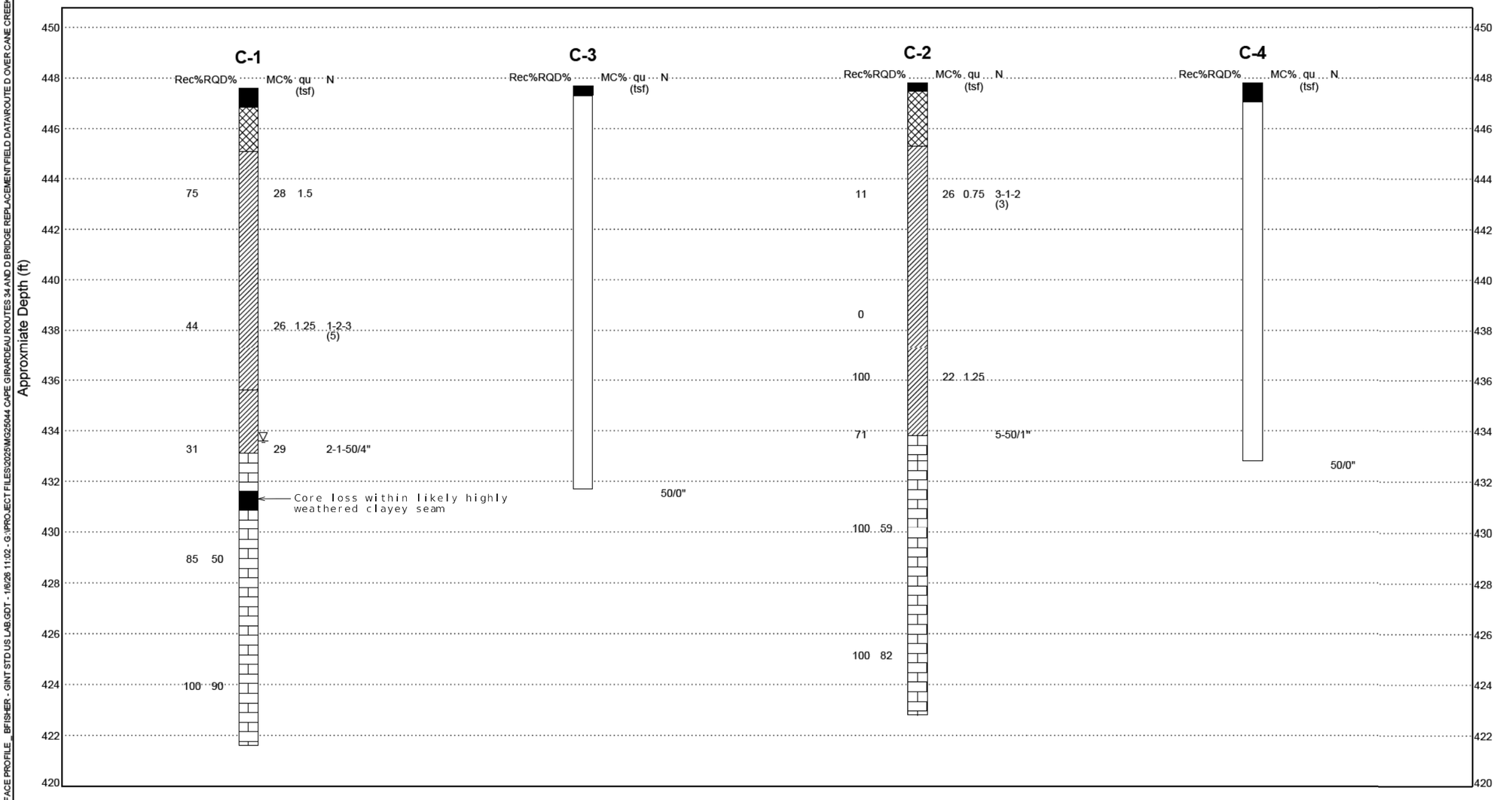

Horizontal Scale for Reference Only. Conditions Between and Below Borings is Unknown and Subject to Change.

BORING DATA

Note: For locations of borings, see Sheet No. 1.

Detailed Jan. 2026
Checked July 2026

Note: This drawing is not to scale. Follow dimensions.

STATE OF MISSOURI
CHRISTOPHER J. CASWELL
NUMBER PE-026605
PROFESSIONAL ENGINEER
THIS SHEET HAS BEEN SIGNED, SEALED AND DATED ELECTRONICALLY.

DATE PREPARED 9/2/2026

ROUTE	STATE
D	MO
DISTRICT	SHEET NO.
BR	22

COUNTY CAPE GIRARDEAU
JOB NO. J9S3773
CONTRACT ID.
PROJECT NO.
BRIDGE NO. A9778

DESCRIPTION | DATE

IF A SEAL IS PRESENT ON THIS SHEET IT HAS BEEN ELECTRONICALLY SEALED AND DATED.

MISSOURI HIGHWAYS AND TRANSPORTATION COMMISSION
105 WEST CAPITOL
JEFFERSON CITY, MO 65102
1-888-ASK-MODOT (1-888-275-6636)

Bartlett & West
601 MONROE STREET, SUITE 201 - JEFFERSON CITY, MO 65101
PHONE 573-634-3181 - FAX 573-634-7904
CERTIFICATE OF AUTHORITY NO. 000167 - ENGINEERING
WWW.BARTWEST.COM

SUBSURFACE PROFILE_BFISHER - GINT STD US LAB.GDT - 1/6/26 11:02 - G:\PROJECT FILES\2025\MG25044 CAPE GIRARDEAU ROUTES 34 AND D BRIDGE REPLACEMENT\FIELD DATA\ROUTE D OVER CANE CREEK\ROUTE D OVER CANE CREEK.GINT LOGS.G